Find-It-In-Front: Dr. Pinball Section

The inside cover & the front 16 pages cover the basics: Fuses, Matrixes, Adjustments, Audits and more!

Section 3 details the Service Menu!

Diagnostics, Audits, Adjustments, Utilities *(Installs, USB, etc.)* and Tournament information!

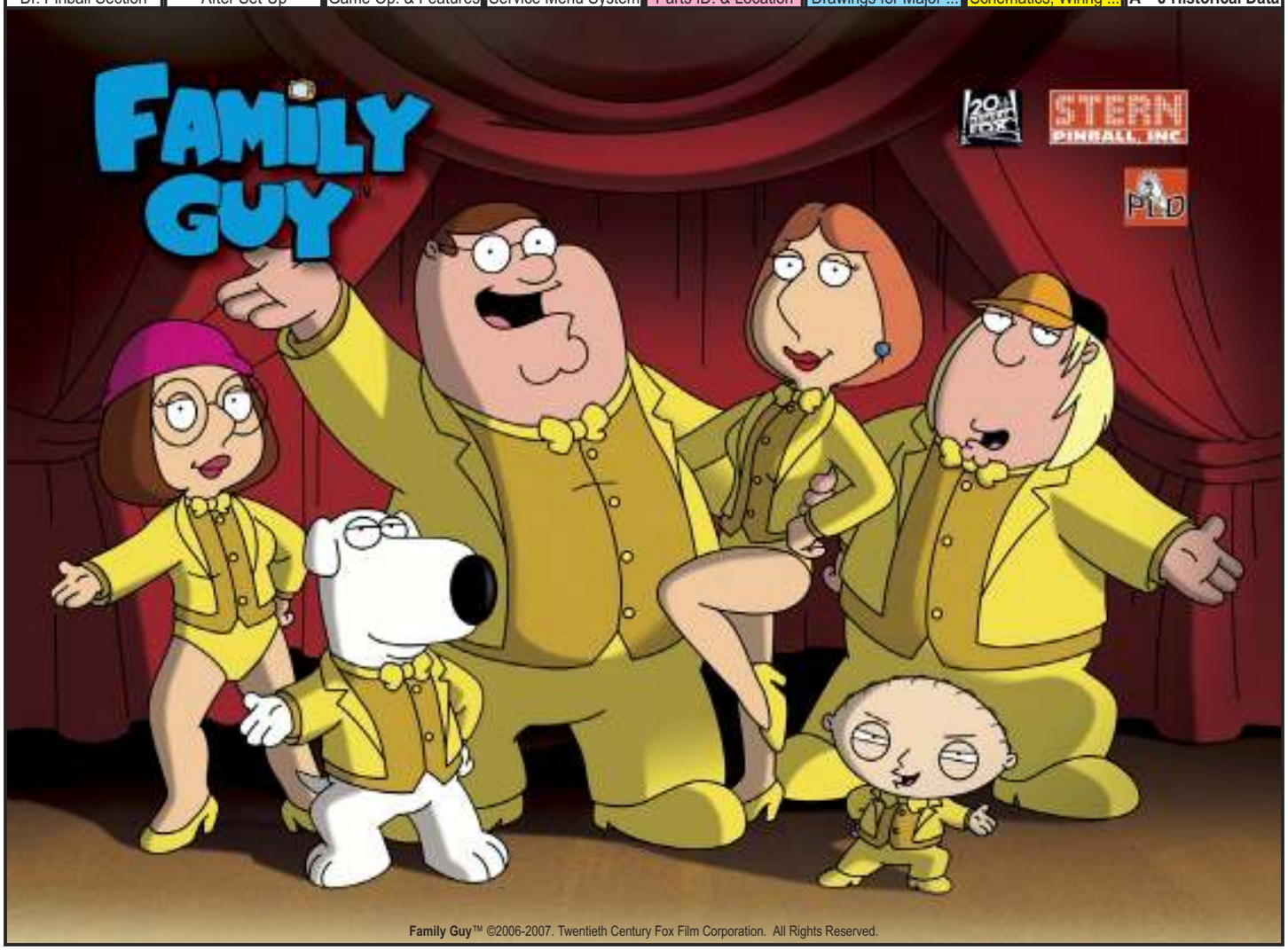

Family Guy™ ©2006-2007. Twentieth Century Fox Film Corporation. All Rights Reserved.

Your Parts Sales & Technical Support Team

Joe Blackwell
DIRECTOR,
Parts Sales &
Technical Support

Patrick Powers
Technical Support
ENGINEER

Chas Siddiqi
Technical Support
ENGINEER

Dorothy Brown
Parts Sales
SUPERVISOR

J. Alfer
Technical Support
Documentation
ADMINISTRATOR

Pinball Service Game Manual

Please call, eMail or visit us online for technical support, questions or comments regarding this pinball game.

Go to ***www.sternpinball.com*** *and click* ***Tech. Support & Parts Sales***

Once there, you will find ***Service Bulletins***, ***GAME Code***, ***Parts***, ***Appendixes***, ***Coin Cards***, ***helpful information*** *and much more!*

• *Toll-Free:* **1-800-KICKERS (542-5377)** *or* **1-708-345-7700** • *eMail:* **parts.service@sternpinball.com** •

Stern® Pinball, Inc.

All Rights Reserved.

Printed in the U.S.A.
January 2008

SPI Part Number
780-5093-01

HOW TO UPDATE YOUR GAME CODE FOR THE NEW S.A.M. SYSTEM

USB Compatible Memory Stick (aka Thumb, Flash *or* Jump Drives) required to copy game code into system.
S.A.M. System compatible, tested & SPI approved USB Memory Sticks 128MB+
available through your local distributor: Ask for **SPI Part Number 970-0128-00**

** to get the Memory Stick with the latest **Game Code** copied to it, add "**the game title name**" to above part number.*

STYLE, COLOR, SIZE AND MANUFACTURER SUBJECT TO CHANGE.

Game Code is subject to change. Update this game with the latest code downloaded from our website, from another game *or* order through your local distributor *(use SPI PN + name above).*

*Upon power-up the display will describe the version of code installed in your game. When directed to do so (via Service Bulletin or website announcement) you will need to update your code ... with the **BOOT FLASH EPROM*** installed, **here's how:***

● Green Button	●● Red Buttons	● Black Button
Press to **Escape Back** *(or **Exit**).*	Press to move **< Left , Right >**. Press to **– Decrease** *or* **+ Increase** values *or* to change settings.	Press to **Enter Select** *(or '**OK**').*

STEP 1 Open the Back Box and locate the **8-Position Dip Switch** *(SW1 on the CPU/Sound Board).*

STEP 2 Switch Dip Switch **#8** to **'ON'**.
*(***BOOT FLASH EPROM** *must be installed.)*

STEP 3 Press the **White Reset Button** *(S1 RESET on the CPU/Sound Board) or* Power Cycle the game **OFF/ON**
(ON/OFF Switch is located on the outside of the cabinet bottom, front right).

STEP 4 Using the **4-Button Service Switch Set** *(inside the Coin Door):*

4A } Press **[SELECT]** to begin.
4B } With the "UPDT" *Icon highlighted,* press **[SELECT]**.
4C } Insert the Memory Stick [with latest file(s)] into the USB Port.
4D } *If more than one file is present on the Memory Stick, press* [<] *or* [>] *to locate your file.* Press **[SELECT]** to update.
4E } Follow on-screen prompts.

CPU/Sound Board (S.A.M. System)

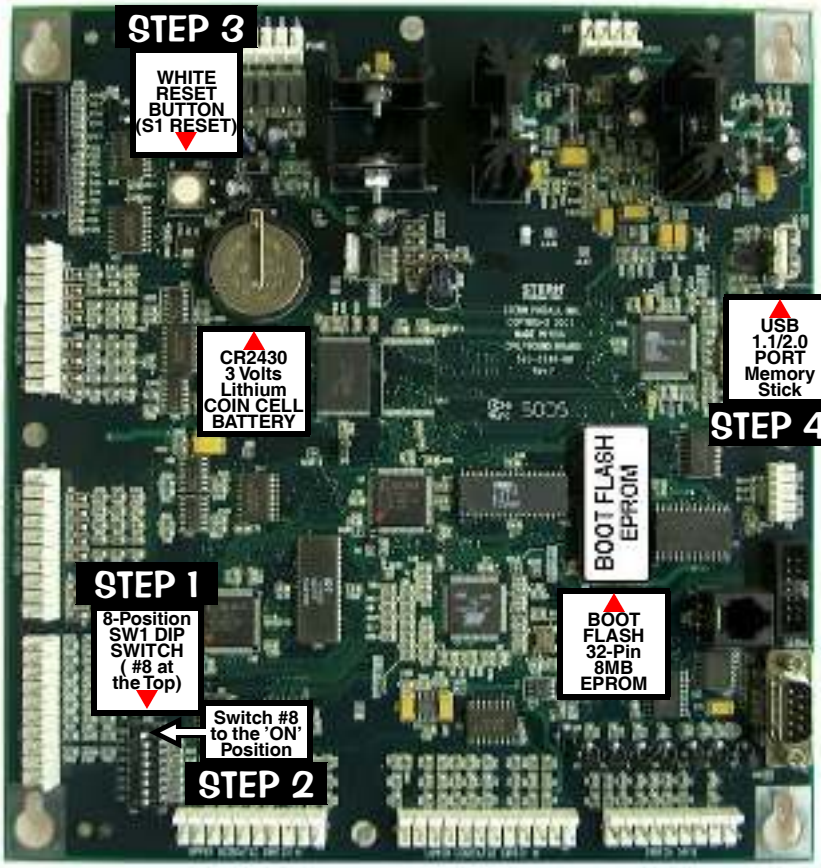

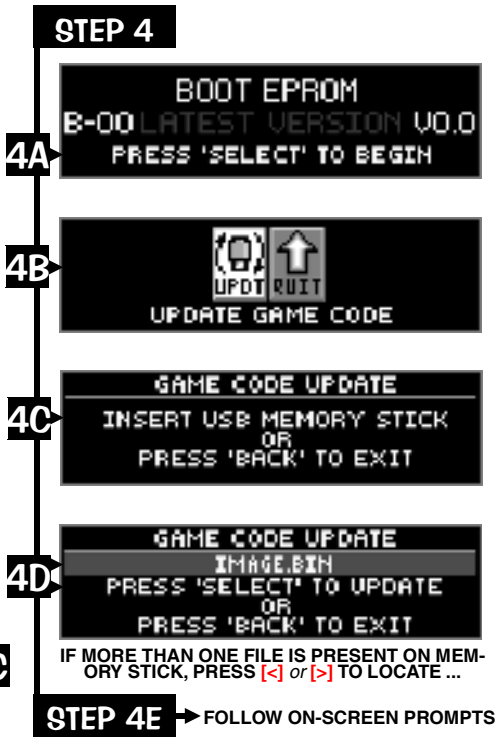

You can also retrieve your latest code from another game! From the **USB MENU** via the **UTILITIES MENU**, select the "BKUP" *Icon instead* and download to your Memory Stick. *Review the end of Section **3**, Chapter **5**.*

! Quick Tip ~ *Try backing up your current code prior to installing your new code, just in case your Memory Stick file was corrupted by a computer glitch while you were copying / downloading.*

Got confused? Comments? Questions? Call Technical Support at 800-542-5377 or 708-345-7700 (Option 1).

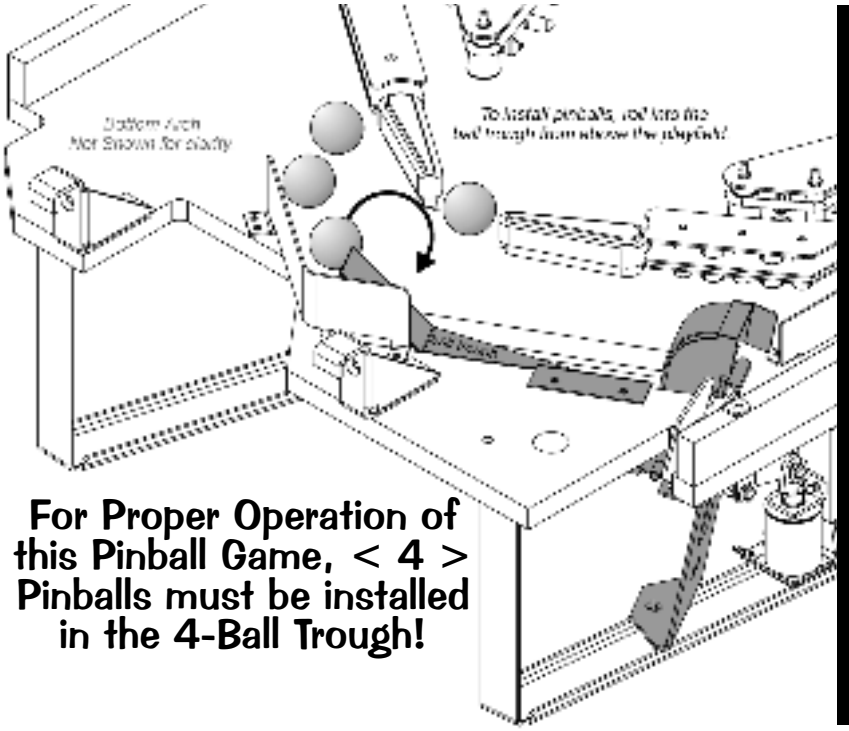

For Proper Operation of this Pinball Game, < 4 > Pinballs must be installed in the 4-Ball Trough!

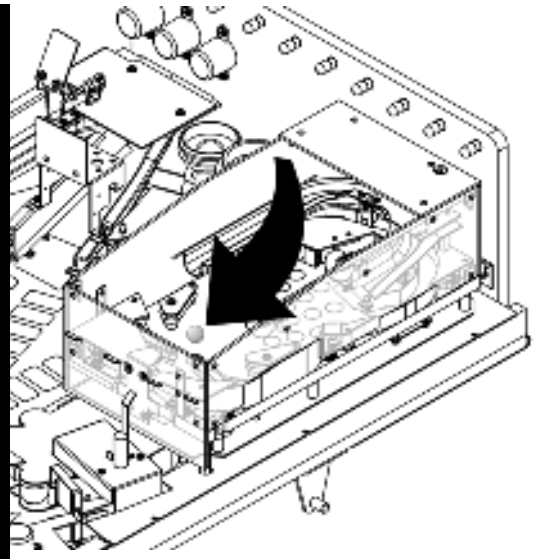

THIS GAME ▲ INSTALL 1 MINI-PINBALL ON THE UPPER MINI-PLAYFIELD.

Backbox Fuses*, Cabinet Fuses, Playfield Fuses and Cabinet Switches

***Note:** The CPU/Sound PCB does not have fuses.*

QUICK REFERENCE FUSE CHART

3/4A S.B. 200-5000-17 | 3A S.B. 200-5000-08 | 4A S.B. 200-5000-06 | 5A S.B. 200-5000-01 | 7A S.B. 200-5000-03 | 8A S.B. 200-5000-05

BACKBOX FUSES

I/O POWER DRIVER BOARD

with RED LED STATUS INDICATORS (If any RED LED is OFF, check the fuse)

F1	5A S.B.	5.7VAC	G.I. Lamps	[BROWN-WHITE⇆WHT-BRN]
F2	5A S.B.	5.7VAC	G.I. Lamps	[YELLOW⇆WHITE-YEL Circuit]
F3	5A S.B.	5.7VAC	G.I. Lamps	[GREEN⇆WHITE-GRN Circuit]
F4	5A S.B.	5.7VAC	G.I. Lamps	[VIOLET⇆WHITE-VIO Circuit]
F5	7A S.B.	50VDC	Coils / Flippers	[48VAC feed to BRDG 1]
F6	3A S.B.	24VAC	Motor or Special Application	
F7	4A S.B.	50VDC	Magnet(s) or Special Application	
F8	3A S.B.	50VDC	Coils	
F9	8A S.B.	18VDC	Control Lamps	[13VAC feed to BRDG 4]
F10	5A S.B.	20VDC	Coils / Flashers	[16VAC feed to BRDG 2]
F11	4A S.B.	5VDC	Logic Power	[8VAC feed to BRDG 5]
F12	5A S.B.	12VDC	Audio	[19VAC feed to BRDG 3]
F13	5A S.B.	12VDC	Audio	[19VAC feed to BRDG 3]

DISPLAY POWER SUPPLY BOARD

F1	¾A S.B.	90VDC	High Voltage Dot Display Board

CABINET FUSES

POWER (SERVICE OUTLET) BOX

(Access through Coin Door inside cabinet, front bottom.)

8A S.B.	110-120V Main Line US / Canada / Japan
5A S.B.	220-240V Main Line International

PLAYFIELD FUSES

FLIPPER OR SPECIAL APPLICATION

(Coil Fuses are located under the playfield near assembly)

3A S.B.	50VDC	R. Flipper [BLU-YEL⇆RED-YEL]
3A S.B.	50VDC	L. Flipper [GRY-YEL⇆RED-YEL]
3A S.B.	50VDC	Additional Flipper Coil, if used.
3A S.B.	50VDC	Spcl. Application Coil, if used.

For location & more details on fuses, see Sec. 5, Chp. 2

ALL FUSES ARE 250V S.B. (SLO-BLO)
SEE FUSE OR TABLES FOR AMP RATING
CAUTION : FOR CONTINUED PROTECTION AGAINST RISK OF FIRE, REPLACE ONLY WITH SAME TYPE FUSE WITH IDENTICAL ELECTRICAL RATING!

Stern Pinball®, Inc. ©2006 820-6354-00 Rev. A

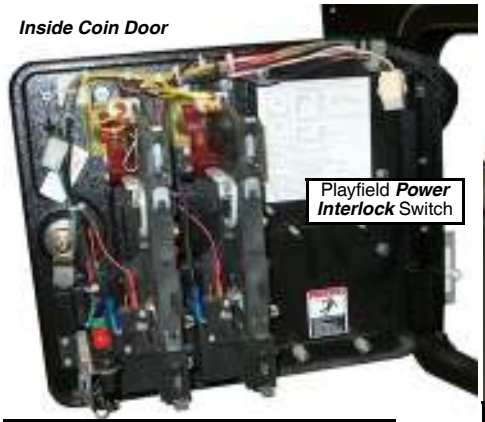

4-Button Switch Set:
*For operational usage, see Sec. **3**, Chapter **1**, **Service Menu Introduction**.*

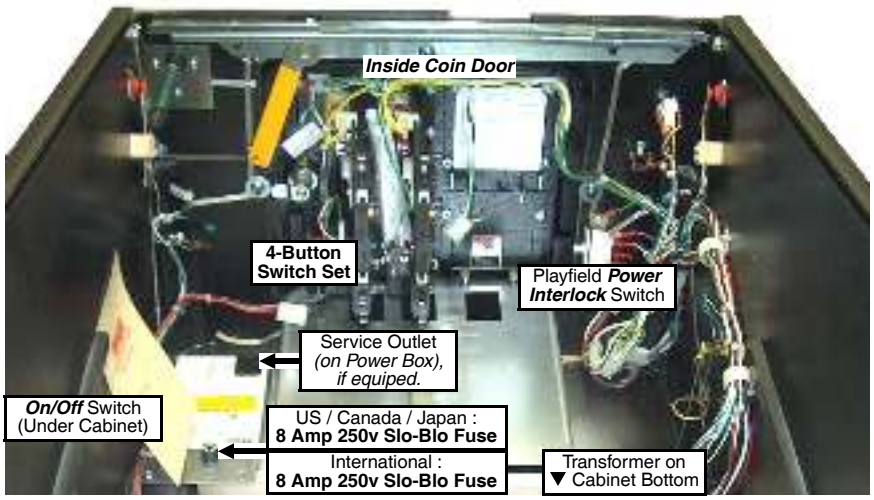

Find-It-In-Front:
Dr. Pinball

DR. ❶

FIND-IT-IN-FRONT: Dr. Pinball Section Explained

The key technical data from various parts of the manual were extracted and combined into the **"Find- It-In-Front: Dr. Pinball Section."** This front section (Pages **DR. ❶ - ⓰**) will assist the technician in locating important technical information needed to troubleshoot the Pinball Machine. *To enter the **SERVICE MENU**, read below.*

● ● ● ● Service Switch X4 Set Overview

The four buttons *(inside Coin Door)* have dual functions depending if you have entered the **Service Menu** or not.

Functions in Game or Attract Mode

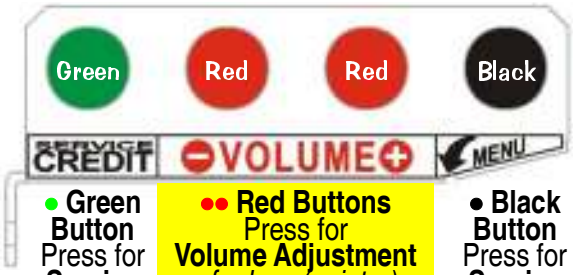

● Green Button Press for **Service Credit(s).**

●● Red Buttons Press for **Volume Adjustment** *– for less (quieter), + for more (louder)*

● Black Button Press for **Service Menu** *entry.*

Functions in the Service Menu

● Green Button Press to **Escape Back** *(or **Exit**).*

●● Red Buttons Press to move **< Left , Right >.** Press to **– Decrease** *or* **+ Increase** values *or* to change settings.

● Black Button Press to **Enter Select** *(or '**OK**').*

OPEN THE COIN DOOR TO ACCESS THE SERVICE SWITCH X4 SET.

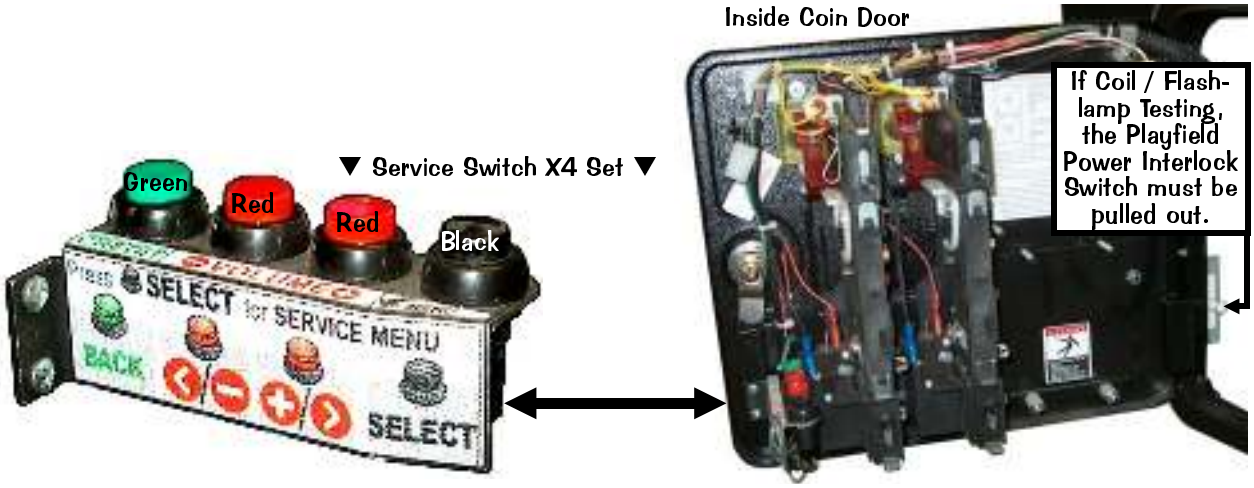

EXAMPLE:

To enter the **SERVICE MENU**, then enter the **SWITCH TEST MENU** via the **DIAGNOSTIC MENU**, perform the below steps.

Step 1 Press **[SELECT]**.

Step 2 With the "DIAG" *Icon* highlighted, press **[SELECT]**.

Step 3 With the "SW" *Icon* highlighted, press **[SELECT]**.

Step 4 With the "TEST" *Icon* highlighted, press **[SELECT]**.

*Press any switch. If wired correctly, the information in the display will match the information in the Switch Matrix (see DR. **4**).*

Press **[<]** or **[>]** to move left or right through the menus.

Press **[BACK]** to go back a menu, exit or escape at any time.

Continue through the other menus.

More details & information about the ***SERVICE MENU*** *is covered in Section **3**. The Service Menu is subject to change. Update this game with the latest code downloaded from out website with a USB Memory Stick (64MB min., recommendation 128MB or higher). See the inside front cover for directions or in the Service Menu "Go To Utilities Menu" then "Go To USB Menu" and follow prompts.*

DIAGNOSTIC AIDS

This ***audible / visual alert display*** is shown when the **50V / 20V Power** is disabled *(by opening the Coin Door)*. **PULL OUT THE INTERLOCK SWITCH ONLY WHILE IN THE SERVICE MENU FOR COIL, SWITCH OR PLAY TESTING WHEN THE COIN DOOR IS REQUIRED TO STAY OPEN FOR SERVICE BUTTON USE!** Pulling out the Power Interlock Switch or pressing the 'escape' **Green [BACK] Button** will remove the alert display. Initial display presentation is accompanied by 3 audible tones *(the bright display warning will go dim after approximately 30 seconds).*

This ***alert display*** is shown momentarily during **Game Mode** or **Power-Up** to alert the operator of a device malfunction *(device or mechanism doesn't energize or is energized repeatedly)*. **OPERATOR ALERT!** works by monitoring any *switch activated device* that has the potential to trap a ball when disabled *(e.g. in the Shooter Lane, Scoop or Eject Holes, etc.)*. This alert can also appear if a switch associated with a device *(e.g. Ball Trough, Auto Plunger, etc.)* is stuck closed *(caused by a switch jam or stuck ball)*; the game will activate the device a predetermined number of times and if the problem is still detected, this device *or* switch will be noted in **Switch Alerts** *(Page **14**)* and/or **Technician Alerts** *(Page **18**)*.

Upon entering the **SERVICE MENU**, if an asterisk " * " is displayed after the words "SERVICE MENU," the game has detected possible faulty devices, switches and/or missing pinballs. Press the either of the **Red Buttons** *(short-cut to the TECHNICIAN ALERTS MENU) or* continue into the **SERVICE MENU** *(press the **Black Button** again),* select the "DIAG" *Icon* and "TECH" *Icon* for the **Technician Alerts** information *(Page **18**)*.

CPU DIP SWITCH SETTINGS

The 8-Pos. Dip Switch [SW1] is on the CPU/Sound Board (between Conn. J3 & J13, lower left corner)

CPU COUNTRY SETTING:	Pos.	1	2	3	4	5	6	7	8
USA	ON								
	OFF	▼	▼	▼	▼	▼	▼	▼	▼

CPU COUNTRY SETTING:	Pos.	1	2	3	4	5	6	7	8
Austria	ON	▲							
	OFF		▼	▼	▼	▼	▼	▼	▼

CPU COUNTRY SETTING:	Pos.	1	2	3	4	5	6	7	8
Australia	ON	▲		▲	▲				
	OFF		▼			▼	▼	▼	▼

CPU COUNTRY SETTING:	Pos.	1	2	3	4	5	6	7	8
Belgium	ON		▲						
	OFF	▼		▼	▼	▼	▼	▼	▼

CPU COUNTRY SETTING:	Pos.	1	2	3	4	5	6	7	8
Canada 1	ON	▲	▲						
	OFF			▼	▼	▼	▼	▼	▼

CPU COUNTRY SETTING:	Pos.	1	2	3	4	5	6	7	8
Canada 2	ON		▲		▲	▲			
	OFF	▼		▼			▼	▼	▼

CPU COUNTRY SETTING:	Pos.	1	2	3	4	5	6	7	8
Croatia	ON		▲	▲		▲			
	OFF	▼			▼		▼	▼	▼

CPU COUNTRY SETTING:	Pos.	1	2	3	4	5	6	7	8
Denmark	ON	▲			▲				
	OFF		▼	▼		▼	▼	▼	▼

CPU COUNTRY SETTING:	Pos.	1	2	3	4	5	6	7	8
Finland	ON	▲		▲					
	OFF		▼		▼	▼	▼	▼	▼

CPU COUNTRY SETTING:	Pos.	1	2	3	4	5	6	7	8
France	ON		▲	▲					
	OFF	▼			▼	▼	▼	▼	▼

CPU COUNTRY SETTING:	Pos.	1	2	3	4	5	6	7	8
Germany	ON	▲	▲	▲					
	OFF				▼	▼	▼	▼	▼

CPU COUNTRY SETTING:	Pos.	1	2	3	4	5	6	7	8
Greece	ON	▲	▲	▲	▲				
	OFF					▼	▼	▼	▼

CPU COUNTRY SETTING:	Pos.	1	2	3	4	5	6	7	8
Italy	ON				▲				
	OFF	▼	▼	▼		▼	▼	▼	▼

CPU COUNTRY SETTING:	Pos.	1	2	3	4	5	6	7	8
Japan	ON	▲		▲		▲			
	OFF		▼		▼		▼	▼	▼

CPU COUNTRY SETTING:	Pos.	1	2	3	4	5	6	7	8
Middle East	ON	▲	▲	▲		▲			
	OFF				▼		▼	▼	▼

CPU COUNTRY SETTING:	Pos.	1	2	3	4	5	6	7	8
Netherlands	ON			▲					
	OFF	▼	▼		▼	▼	▼	▼	▼

CPU COUNTRY SETTING:	Pos.	1	2	3	4	5	6	7	8
New Zealand	ON					▲			
	OFF	▼	▼	▼	▼		▼	▼	▼

CPU COUNTRY SETTING:	Pos.	1	2	3	4	5	6	7	8
Norway	ON		▲		▲				
	OFF	▼		▼		▼	▼	▼	▼

CPU COUNTRY SETTING:	Pos.	1	2	3	4	5	6	7	8
Portugal	ON	▲				▲			
	OFF		▼	▼	▼		▼	▼	▼

CPU COUNTRY SETTING:	Pos.	1	2	3	4	5	6	7	8
Russia	ON	▲			▲	▲			
	OFF		▼	▼			▼	▼	▼

CPU COUNTRY SETTING:	Pos.	1	2	3	4	5	6	7	8
So. Africa	ON			▲		▲			
	OFF	▼	▼		▼		▼	▼	▼

CPU COUNTRY SETTING:	Pos.	1	2	3	4	5	6	7	8
Spain	ON		▲			▲			
	OFF	▼		▼	▼		▼	▼	▼

CPU COUNTRY SETTING:	Pos.	1	2	3	4	5	6	7	8
Sweden	ON	▲	▲		▲				
	OFF			▼		▼	▼	▼	▼

CPU COUNTRY SETTING:	Pos.	1	2	3	4	5	6	7	8
Switzerland	ON			▲	▲				
	OFF	▼	▼			▼	▼	▼	▼

CPU COUNTRY SETTING:	Pos.	1	2	3	4	5	6	7	8
Taiwan	ON				▲	▲			
	OFF	▼	▼	▼			▼	▼	▼

CPU COUNTRY SETTING:	Pos.	1	2	3	4	5	6	7	8
UK	ON		▲	▲	▲				
	OFF	▼				▼	▼	▼	▼

CPU/SND PCB SETTING:	Pos.	1	2	3	4	5	6	7	8
UPDATE CODE	ON								▲
	OFF	▼	▼	▼	▼	▼	▼	▼	

Note: *Slide Dip Switch 8 to Position **ON** (with Dip Switches 1-7 in the **OFF** Position) only to reboot the game with the latest version BOOT EPROM installed at **U9** on the CPU/Sound Board (S.A.M. System only). Currently, this is also the procedure to update your game with the latest software code update file. For the latest version, visit our website. If you have questions about updating your game code, call Technical Support for assistance.*

SWITCH MATRIX GRID [#1 – #64] {Switch Locations on the next page}

CPU/ Sound Board	01 IC-U22A RETURN▲ WHT-BRN J6-P9	02 IC-U22B RETURN▲ WHT-RED J6-P8	03 IC-U22C RETURN▲ WHT-ORG J6-P7	04 IC-U22D RETURN▲ WHT-YEL J6-P6	05 IC-U16A RETURN▲ WHT-GRN J6-P5	06 IC-U16B RETURN▲ WHT-BLU J6-P3	07 IC-U16C RETURN▲ WHT-VIO J6-P2	08 IC-U16D RETURN▲ WHT-GRY J6-P1	09 IC-U36A RETURN▲ TAN-BLK J12-P9	10 IC-U36B RETURN▲ TAN-RED J12-P8	11 IC-U36C RETURN▲ TAN-ORG J12-P7	12 IC-U36D RETURN▲ TAN-YEL J12-P6	13 IC-U40A RETURN▲ TAN-GRN J12-P4	14 IC-U40B RETURN▲ TAN-BLU J12-P3	15 IC-U40C RETURN▲ TAN-VIO J12-P2	16 IC-U40D RETURN▲ TAN-WHT J12-P1
01 Q1 DRIVE ▶ GRN-BRN J1-P1	SW. # 1 BALL SAVER UP 180-5010-04 below playfield	SW. # 2 BALL SAVER DOWN 180-5010-04 below playfield	SW. # 3 LEFT ORBIT STAND-UP 515-5162-08 below playfield	SW. # 4 RIGHT 2-BANK BOTTOM 515-5162-08 below playfield	SW. # 5 RIGHT 2-BANK TOP 515-5162-08 below playfield	SW. # 6 LEFT NEWTON ROLLOVER 500-6227-01 below playfield	SW. # 7 RIGHT NEWTON ROLLOVER 500-6227-02 below playfield	SW. # 8 PIRATE [STAND-UP] TARGET 515-5967-04 below playfield	SW. # 9 1-BANK DROP TARGET 520-5252-01 below playfield	SW. # 10 MEG [STAND-UP] TARGET 515-5162-08 below playfield	SW. # 11 NOT USED	SW. # 12 NOT USED	SW. # 13 TV EJECT « D.O.T.S. » 180-5183-00 a / b playfield	SW. # 14 NOT USED	SW. # 15 TOURNA-MENT START CABINET 180-5119-03 Front Molding	SW. # 16 START BUTTON CABINET 180-5174-00 In Cabinet
02 Q2 DRIVE ▶ GRN-RED J1-P3	SW. # 17 NOT USED	SW. # 18 (4-BALL) TROUGH #4 (L) 180-5119-02 below playfield	SW. # 19 (4-BALL) TROUGH #3 180-5119-02 below playfield	SW. # 20 (4-BALL) TROUGH #2 180-5119-02 below playfield	SW. # 21 (VUK OPTO) TROUGH #1 (R) TRANS. / REC. TX 515-0173-00 RX 515-0174-00	SW. # 22 (STACK OPTO) TROUGH JAM TRANS. / REC. TX 515-0173-00 RX 515-0174-00	SW. # 23 SHOOTER LANE 180-5157-00 below playfield	SW. # 24 LEFT OUTLANE 500-6227-02 below playfield	SW. # 25 LEFT RETURN [LANE] 500-6227-02 below playfield	SW. # 26 LEFT SLING 180-5054-00 2 per Asm.	SW. # 27 RIGHT SLING 180-5054-00 2 per Asm.	SW. # 28 RIGHT RETURN [LANE] 500-6227-01 below playfield	SW. # 29 RIGHT OUTLANE 500-6227--01 below playfield	SW. # 30 TOP BUMPER 180-5015-04 below playfield	SW. # 31 RIGHT BUMPER 180-5015-04 below playfield	SW. # 32 BOTTOM BUMPER 180-5015-04 below playfield
03 Q3 DRIVE ▶ GRN-ORG J1-P4	SW. # 33 LEFT RAMP MADE 180-5087-00 a / b playfield	SW. # 34 NOT USED	SW. # 35 EVIL MONKEY 180-5119-02 above playfield	SW. # 36 NOT USED	SW. # 37 NOT USED	SW. # 38 NOT USED	SW. # 39 RIGHT ORBIT SPINNER 180-5010-04 above playfield	SW. # 40 DEATH RETURN [INNER LT.] 500-6227-02 below playfield	SW. # 41 3 BANK [STAND-UP] BOTTOM 515-5162-08 below playfield	SW. # 42 3 BANK [STAND-UP] MIDDLE 515-5162-08 below playfield	SW. # 43 3 BANK [STAND-UP] TOP 515-5162-08 below playfield	SW. # 44 (F) ART [4-BANK DROP TGT.] 520-5252-04 below playfield	SW. # 45 F (A) RT [4-BANK DROP TGT.] 520-5252-04 below playfield	SW. # 46 FA (R) T [4-BANK DROP TGT.] 520-5252-04 below playfield	SW. # 47 FAR (T) [4-BANK DROP TGT.] 520-5252-04 below playfield	SW. # 48 SNEAK RAMP 180-5183-00 below playfield
04 Q4 DRIVE ▶ GRN-YEL J1-P5	SW. # 49 BEER CAN (BRIAN) 180-5189-00 a / b playfield	SW. # 50 MINI MEG TARGET [STAND-UP] 511-5081-00 below playfield	SW. # 51 MINI PETER TARGET [STAND-UP] 511-5081-00 below playfield	SW. # 52 MINI RIGHT ORBIT 500-6775-00 mini-playfield	SW. # 53 MINI LEFT ORBIT 500-6775-00 mini-playfield	SW. # 54 MINI RAMP 500-6775-00 mini-playfield	SW. # 55 MINI TROUGH 500-6775-01 mini-playfield	SW. # 56 NOT USED	SW. # 57 RIGHT ORBIT 500-6227-02 below playfield	SW. # 58 NOT USED	SW. # 59 NOT USED	SW. # 60 NOT USED	SW. # 61 NOT USED	SW. # 62 NOT USED	SW. # 63 NOT USED	SW. # 64 CLAM EJECT « D.O.T.S. » 180-5209-00 below playfield

Wire Color Abbreviations used: BLK Black · BLU Blue · BRN Brown · GRY Gray · GRN Green · LGN Light Grn. · ORG Orange · PNK Pink · RED Red · TAN Tan · VIO Violet · WHT White · YEL Yellow

Dedicated Switches (D-1 – D-32) {Dedicated Switch Locations on the next page}

CPU/SND Board	IC-U2 PNK-BRN J2-P2	IC-U2 PNK-RED J2-P3	IC-U2 PNK-ORG J2-P4	IC-U2 PNK-YEL J2-P6	IC-U2 PNK-GRN J2-P7	IC-U2 PNK-BLU J2-P8	IC-U2 PNK-VIO J2-P9	IC-U2 PNK-GRY J2-P10	IC-U4 GRY-BRN J3-P1	IC-U4 GRY-RED J3-P2	IC-U4 GRY-ORG J3-P4	IC-U4 GRY-YEL J3-P5	IC-U4 GRY-GRN J3-P6	IC-U4 GRY-BLU J3-P7	IC-U4 GRY-VIO J3-P8	IC-U4 GRY-BLK J3-P9
GROUND (BLK) J2-P1/11 & J3-P10	SW. D-1 LEFT COIN SLOT 180-5204-00 Coin Door	SW. D-2 CENTER COIN SLOT/DBA 180-5204-00 Coin Door	SW. D-3 RIGHT COIN SLOT 180-5204-00 Coin Door	SW. D-4 4TH COIN SLOT 180-5204-00 Coin Door	SW. D-5 5TH COIN SLOT IF USED	SW. D-6 NOT USED	SW. D-7 NOT USED	SW. D-8 NOT USED	SW. D-9 LEFT FLIPPER BUTTON 180-5164-01 Cabinet Side	SW. D-10 LEFT FLIPPER E.O.S. 180-5149-00 Flipper Asm.	SW. D-11 RIGHT FLIPPER BUTTON 180-5160-01 Cabinet Side	SW. D-12 RIGHT FLIPPER E.O.S. 180-5149-00 Flipper Asm.	SW. D-13 UPR. LT. FLIPPER BUTTON 180-5164-01 Cabinet Side	SW. D-14 NOT USED	SW. D-15 UPR. RT. FLIPPER BUTTON NOT USED 180-5164-01 Cabinet Side	SW. D-16 NOT USED

CPU/SND Board	IC-41 LGN-BRN J13-P1	IC-41 LGN-RED J13-P3	IC-41 LGN-ORG J13-P4	IC-41 LGN-YEL J13-P5	IC-41 LGN-BLK J13-P6	IC-41 LGN-BLU J13-P7	IC-41 LGN-VIO J13-P8	IC-41 LGN-GRY J13-P9
GROUND (BLK) J13-P10	SW. D-17 TILT PENDULUM (PLUMB BOB) See Sec. 4, Chp. 1, Pg. 63 for cab. parts	SW. D-18 SLAM TILT OPTIONAL 502-5032-00 Optional Kit	SW. D-19 TICKET NOTCH IF USED 180-5119-02 Below P/F	SW. D-20 NOT USED	SW. D-21 BACK (GREEN BUTTON) 180-5192-04 Coin Door	SW. D-22 MINUS (< / – RED BUTTON) 180-5192-02 Coin Door	SW. D-23 PLUS (+ / > RED BUTTON) 180-5192-02 Coin Door	SW. D-24 SELECT (BLACK BUTTON) 180-5192-00 Coin Door

CPU/SOUND BD. SW1 DIP SWITCH *(located between Connectors J3/J13)*

SW. D-25	SW. D-26	SW. D-27	SW. D-28	SW. D-29	SW. D-30	SW. D-31	SW. D-32
DIP SWITCH POSITION #1 ON / OFF	DIP SWITCH POSITION #2 ON / OFF	DIP SWITCH POSITION #3 ON / OFF	DIP SWITCH POSITION #4 ON / OFF	DIP SWITCH POSITION #5 ON / OFF	DIP SWITCH POSITION #6 ON / OFF	DIP SWITCH POSITION #7 ON / OFF	DIP SWITCH POSITION #8 ON / OFF

Find-It-In-Front: Dr. Pinball

SWITCH MENU: SWITCH, ACTIVE, SINGLE & SERVICE

SWITCH LOCATIONS

{Switch Matrix Grid [#1 – #64] on the previous page}

THERE ARE NO SWITCHES LOCATED ON THE BACK PANEL.

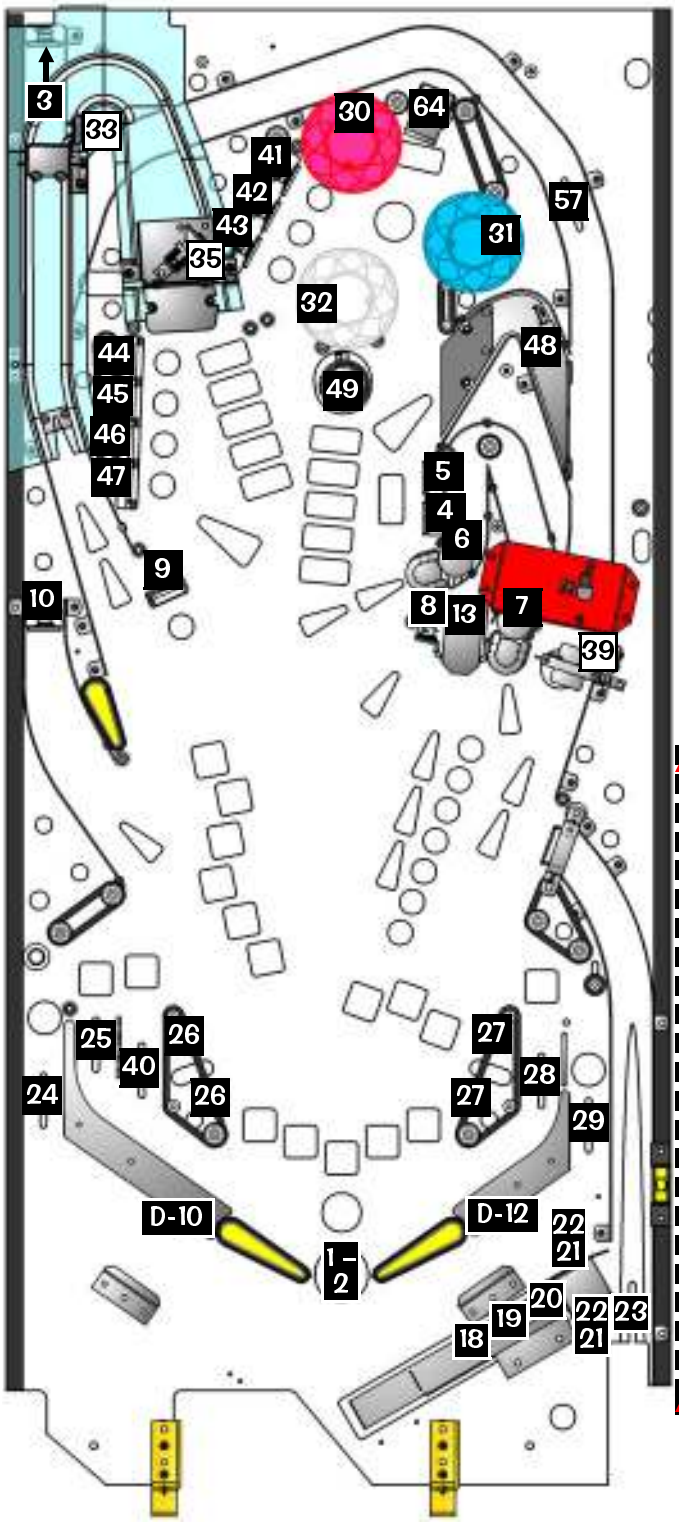

MINI-PLAYFIELD

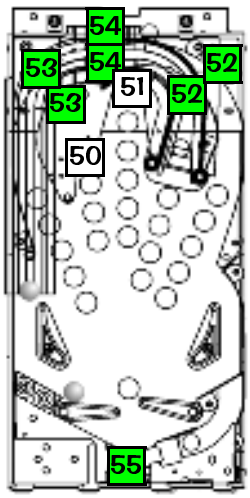

Typical Switch Wiring & Schematic

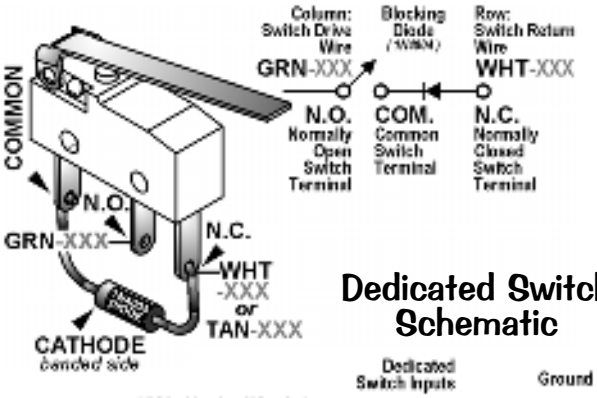

Dedicated Switch Schematic

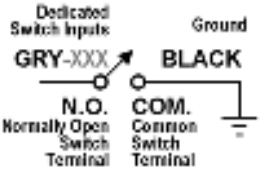

= Switches above Playfield.

= Switches below Playfield.

= OPTO Switch Pairs above.

Switch Part Notes: *¥ Yen Coin Switch is 180-5091-00. Part Numbers which start with 515- or 500- include the bracket, target, and/or housing.*

Sw. D-17 Part Note: *The Switch is comprised of a Hanger Bracket (535-5319-00) and Contact Wire (535-7563-01) located in the Cabinet.*

LAMP MATRIX GRID [#1 – #80] {Lamp Locations on the next page}

I / O Power Driver Board	01 IC-U17 18VDC YEL-BRN J13-P9	02 IC-U16 18VDC YEL-RED J13-P8	03 IC-U15 18VDC YEL-ORG J13-P7	04 IC-U14 18VDC YEL-BLK J13-P6	05 IC-U13 18VDC YEL-GRN J13-P5	06 IC-U12 18VDC YEL-BLU J13-P4	07 IC-U11 18VDC YEL-VIO J13-P3	08 IC-U10 18VDC YEL-GRY J13-P1
01 Q33 GROUND RED-BRN J12-P1	#555 Clear LP. # 1 START BUTTON 165-5002-00	#CM86 Clear LP. # 2 TOURNAMENT START BUTTON 165-5103-00	#555 Clear LP. # 3 FAMILY PETER 165-5002-00	#44 Clear LP. # 4 FAMILY LOIS 165-5000-44-HF	#44 Clear LP. # 5 FAMILY BRIAN 165-5000-44-HF	#44 Clear LP. # 6 FAMILY CHRIS 165-5000-44-HF	#44 Clear LP. # 7 FAMILY MEG 165-5000-44-HF	#44 Clear LP. # 8 FAMILY STEWIE 165-5000-44-HF
02 Q34 GROUND RED-BLK J12-P2	#555 Clear LP. # 9 (P) INBALL 165-5002-00	#44 Clear LP. # 10 P (I) NBALL 165-5000-44-HF	#44 Clear LP. # 11 PI (N) BALL 165-5000-44-HF	#44 Clear LP. # 12 PIN (B) ALL 165-5000-44-HF	#44 Clear LP. # 13 PINB (A) LL 165-5000-44-HF	#44 Clear LP. # 14 PINBAL (L) L 165-5000-44-HF	#44 Clear LP. # 15 PINBAL (L) 165-5000-44-HF	#44 Clear LP. # 16 LEFT OUTLANE [NOT SPECIAL] 165-5000-44-HF
03 Q35 GROUND RED-ORG J12-P3	#555 Clear LP. # 17 LEFT RETURN [2X LOIS] 165-5002-00	#44 Clear LP. # 18 RAISE DEATH [LEFT INNER] 165-5000-44-HF	#44 Clear LP. # 19 GOOD OLD BOYS 165-5000-44-HF	#44 Clear LP. # 20 SUPER GRIFFINS 165-5000-44-HF	#44 Clear LP. # 21 CHICKEN FIGHT 165-5000-44-HF	#44 Clear LP. # 22 SEXY PARTY 165-5000-44-HF	#44 Clear LP. # 23 IPECAC CONTEST 165-5000-44-HF	#44 Clear LP. # 24 (1) [BY RT. SLING] 165-5000-44-HF
04 Q36 GROUND RED-YEL J12-P4	#555 Clear LP. # 25 (2) [BY RT. SLING.] 165-5002-00	#44 Clear LP. # 26 (3) [BY RT. SLING] 165-5000-44-HF	#44 Clear LP. # 27 RT RETURN [2X MEG] 165-5000-44-HF	#44 Clear LP. # 28 RT. OUTLANE [SPECIAL] 165-5000-44-HF	#44 Clear LP. # 29 TV [SCOOP] 165-5000-44-HF	#44 Clear LP. # 30 PINBALL [SCOOP] 165-5000-44-HF	#44 Clear LP. # 31 MULTIBALL [SCOOP] 165-5000-44-HF	#44 Clear LP. # 32 MEG JACKPOT 165-5000-44-HF
05 Q37 GROUND RED-GRN J12-P5	#555 Clear LP. # 33 PIRATE [STAND-UP] 165-5002-00	#44 Clear LP. # 34 RT. NEWTON JACKPOT 165-5000-44-HF	#44 Clear LP. # 35 FAR (T) [4-BNK DRP/TRG] 165-5000-44-HF	#44 Clear LP. # 36 FA (R) T [4-BNK DRP/TRG] 165-5000-44-HF	#44 Clear LP. # 37 F (A) RT [4-BNK DRP/TRG] 165-5000-44-HF	#44 Clear LP. # 38 (F) ART [4-BNK DRP/TRG] 165-5000-44-HF	#44 Clear LP. # 39 LEFT ORBIT CHRIS 165-5000-44-HF	#44 Clear LP. # 40 LEFT ORBIT JACKPOT 165-5000-44-HF
06 Q38 GROUND RED-BLU J12-P6	#555 Clear LP. # 41 DEATH [1-BNK DRP/TRG] 165-5002-00	#44 Clear LP. # 42 SKILL SHOT 165-5000-44-HF	#44 Clear LP. # 43 200K [TO LEFT RAMP] 165-5000-44-HF	#44 Clear LP. # 44 300K [TO LEFT RAMP] 165-5000-44-HF	#44 Clear LP. # 45 400K [TO LEFT RAMP] 165-5000-44-HF	#44 Clear LP. # 46 500K [TO LEFT RAMP] 165-5000-44-HF	#44 Clear LP. # 47 CRAZY CHRIS [TO LEFT RAMP] 165-5000-44-HF	#44 Clear LP. # 48 COLLECT BEERS [BEER CAN] 165-5000-44-HF
07 Q39 GROUND RED-VIO J12-P8	#555 Clear LP. # 49 GIGGITY GIGGITY [BEER CAN] 165-5002-00	#44 Clear LP. # 50 HAPPY HOUR [BEER CAN] 165-5000-44-HF	#44 Clear LP. # 51 REMEMBER WHEN [BEER CAN] 165-5000-44-HF	#44 Clear LP. # 52 LARD MULTIBALL [BEER CAN] 165-5000-44-HF	#44 Clear LP. # 53 EXTRA BALL [LEFT NEWTON] 165-5000-44-HF	#44 Clear LP. # 54 LEFT NEWTON JACKPOT 165-5000-44-HF	#44 Clear LP. # 55 EVIL MONKEY JACKPOT 165-5000-44-HF	#44 Clear LP. # 56 3-BANK TOP ['X' STAND-UP] 165-5000-44-HF
08 Q40 GROUND RED-GRY J12-P9	#555 Clear LP. # 57 3-BANK MID ['X' STAND-UP] 165-5002-00	#44 Clear LP. # 58 3-BANK BOT ['X' STAND-UP] 165-5000-44-HF	LP. # 59 NOT USED	LP. # 60 NOT USED	LED WB WHT LP. # 61 BOTTOM BUMPER « D.O.T.S. » 112-5024-08	#44 Clear LP. # 62 DRUNKEN CLAM [MYSTERY] 165-5000-44-HF	#44 Clear LP. # 63 STEWIE [STAND-UP X2] 165-5000-44-HF	#44 Clear LP. # 64 SHOOT AGAIN 165-5000-44-HF
09 Q41 GROUND RED-WHT J12-P10	#555 Clear LP. # 65 RIGHT ORBIT LOIS 165-5002-00	#44 Clear LP. # 66 RIGHT ORBIT JACKPOT 165-5000-44-HF	#44 Clear LP. # 67 SPINNER [LOIS] 165-5000-44-HF	#44 Clear LP. # 68 MINI SHOOT AGAIN 165-5000-44-HF	LP. # 69 BALL SAVER POST 165-5000-44-HF	LP. # 70 STEWIE SPOT LIGHT « D.O.T.S. » 165-5000-44-HF	LP. # 71 NOT USED 165-5000-44-HF	LP. # 72 NOT USED 165-5000-44-HF
10 Q42 GROUND RED J12-P11	LP. # 73 NOT USED 165-5002-00	LP. # 74 NOT USED 165-5000-44-HF	LP. # 75 NOT USED 165-5000-44-HF	LP. # 76 NOT USED 165-5000-44-HF	LP. # 77 NOT USED 165-5000-44-HF	LP. # 78 NOT USED 165-5000-44-HF	LP. # 79 NOT USED 165-5000-44-HF	LP. # 80 NOT USED 165-5000-44-HF

Wire Color Abbreviations used: BLK Black | BLU Blue | BRN Brown | GRY Gray | GRN Green | ORG Orange | RED Red | VIO Violet | WHT White | YEL Yellow

Find-It-In-Front: Dr. Pinball

DR. 6

LAMP MENU: ONE, ALL, ROW, COLUMN & ORDERED

LAMP LOCATIONS
{Lamp Matrix Grid [#1 – #80] on the previous page}

THERE ARE NO CONTROLLED LAMPS LOCATED ON THE BACK PANEL.

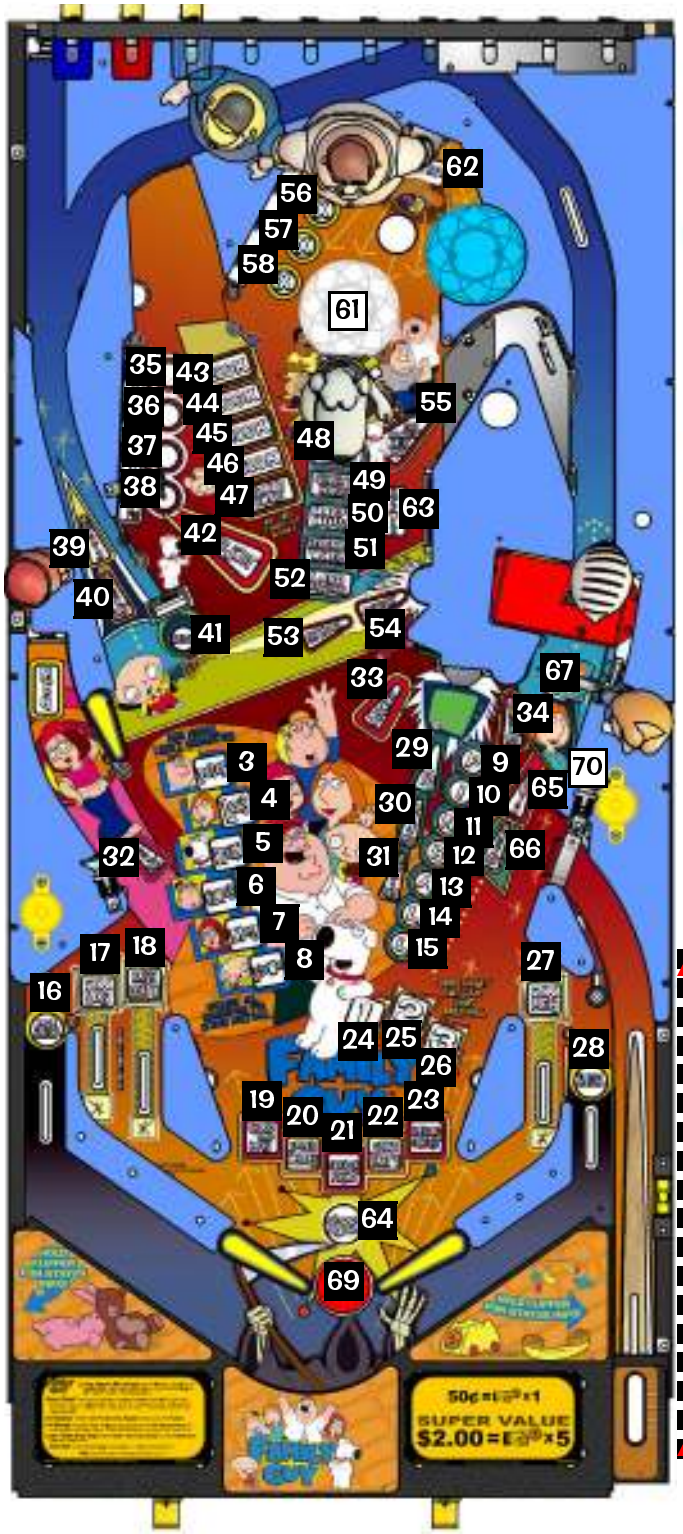

MINI-PLAYFIELD

THE "LETTERS OF EACH NAME" LAMPS ARE NOT CONTROLLED LAMPS IN THE LAMP MATRIX.

SEE SECTION ***5***, PAGES ***142-143*** FOR LEDs ON THE LED PCB.

Typical Lamp Schematic & Wiring

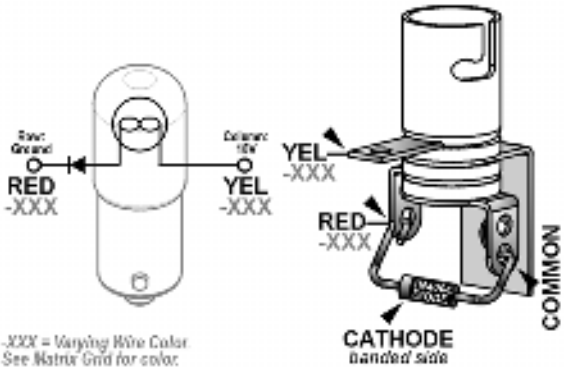

= Lamps above Playfield.

= Lamps below Playfield.

DOTS: **D**iode **O**n **T**erminal **S**trip, *see Sec. **5**, Chp. **2**, **Playfield Wiring**.*

Lamp Part Notes: *#555 Wedge Base (W.B.) Bulb Clear = 165-5002-00. #44 Bayonet Bulb (Heavy Filament) Clear = 165-5000-44-HF.*

*See Section **4**, Chapter **1**, **Parts Identification & Location**, Pages **62-64** for more details on bulbs and corresponding sockets.* ***Some Lamp Diodes may be located under the playfield, in the Cabinet***

COILS DETAILED CHART TABLE

	High Current Coils Group 1	Drive Transistor	Driver Ouput Board	Power Line Color	Power Line Connection	Power Voltage	Drive Transistor Control Line Color	D.T. Control Line Connect	Coil GA-Turn or Bulb Type
#1	TROUGH UP-KICKER	Q1	▲ I/O Power Driver ▼	YEL-VIO	J10-P9/10	50v DC	BRN-BLK	J8-P1	26-1200 ↻ 090-5044-ND
#2	AUTO LAUNCH	Q2		YEL-VIO	J10-P9/10	50v DC	BRN-RED	J8-P3	24-940 ↻ 090-5036-ND
#3	4-BANK DROP TARGET	Q3		YEL-VIO	J10-P9/10	50v DC	BRN-ORG	J8-P4	24-940 ↻ 090-5036-ND
#4	BALL SAVER DOWN (DEATH POST)	Q4		YEL-VIO	J10-P9/10	50v DC	BRN-YEL	J8-P5	32-1800 ↻ 090-5031-00-ND
#5	CLAM EJECT (VUK)	Q5		YEL-VIO	J10-P9/10	50v DC	BRN-GRN	J8-P6	27-1500 ↻ 090-5004-ND
#6	1-BANK DROP TARGET	Q6		YEL-VIO	J10-P9/10	50v DC	BRN-BLU	J8-P7	24-940 ↻ 090-5036-ND
#7	LEFT SLINGSHOT	Q7		YEL-VIO	J10-P9/10	50v DC	BRN-VIO	J8-P8	27-1500 ↻ 090-5004-ND
#8	RIGHT SLINGSHOT	Q8		YEL-VIO	J10-P9/10	50v DC	BRN-GRY	J8-P9	27-1500 ↻ 090-5004-ND

	High Current Coils Group 2	Drive Transistor	Driver Ouput Board	Power Line Color	Power Line Connection	Power Voltage	Drive Transistor Control Line Color	D.T. Control Line Connect	Coil GA-Turn or Bulb Type
#9	BOTTOM BUMPER	Q9	▲ I/O Power Driver ▼	YEL-VIO	J10-P9/10	50v DC	BLU-BRN	J9-P1	26-1200 ↻ 090-5044-ND
#10	RIGHT BUMPER	Q10		YEL-VIO	J10-P9/10	50v DC	BLU-RED	J9-P2	26-1200 ↻ 090-5044-ND
#11	TOP BUMPER	Q11		YEL-VIO	J10-P9/10	50v DC	BLU-ORG	J9-P4	26-1200 ↻ 090-5044-ND
#12	BALL SAVER UP (DEATH POST)	Q12		YEL-VIO	J10-P9/10	50v DC	BLU-YEL	J9-P5	26-1200 ↻ 090-5044-ND
#13	TV EJECT (SCOOP)	Q13		YEL-VIO	J10-P9/10	50v DC	BLU-GRN	J9-P6	23-800 ↻ 090-5001-ND
#14	UPPER LEFT FLIPPER	Q14		BLU-YEL~3A Fuse~RED-YEL	J10-P6/7	50v DC	BLU-BLK	J9-P7	23-1500 ↻ 090-5062-ND
#15	LEFT FLIPPER (50v RED/YEL)	Q15		GRY-YEL~3A Fuse~RED-YEL	J10-P6/7	50v DC	ORG-GRY	J9-P8	23-1100 ↻ 090-5030-ND
#16	RIGHT FLIPPER (50v RED/YEL)	Q16		BLU-YEL~3A Fuse~RED-YEL	J10-P6/7	50v DC	ORG-VIO	J9-P9	23-1100 ↻ 090-5030-ND

	Low Current Coils Group 1	Drive Transistor	Driver Ouput Board	Power Line Color	Power Line Connection	Power Voltage	Drive Transistor Control Line Color	D.T. Control Line Connect	Coil GA-Turn or Bulb Type
#17	LEFT MINI-FLIPPER (UPR. P/F)	Q17	▲ I/O Power Driver ▼	BROWN	J7-P1	20v DC	VIO-BRN	J7-P2	27-950 ↻ 090-5046-01-ND
#18	RIGHT MINI-FLIPPER (UPR. P/F)	Q18		BROWN	J7-P1	20v DC	VIO-RED	J7-P3	27-950 ↻ 090-5046-01-ND
#19	EVIL MONKEY (LEFT RAMP GATE)	Q19		BROWN	J7-P1	20v DC	VIO-ORG	J7-P4	32-1250 ↻ 515-6916-01-ND
#20	STEWIE MOTOR DRIVE	Q20		RED	J16-P4/8	5v DC	VIO-WHT	J7-P6	Stpr. Motor 511-5043-00
#21	MINI-TROUGH (SHOOTER UPR. P/F)	Q21		BROWN	J7-P1	20v DC	VIO-GRN	J7-P7	27-950 ↻ 090-5046-01-ND
#22	MEG SHAKE	Q22		BROWN	J7-P1	20v DC	VIO-BLU	J7-P8	27-950 ↻ 090-5046-01-ND
#23	FLASH: LOWER LEFT	Q23		ORANGE	J6-P10	20v DC	VIO-BLK	J7-P9	#89 Bulb 165-5000-89
#24	OPTIONAL COIL	Q24		RED	J16-P4>8	5v DC	VIO-GRY	J7-P10	Opt. 5v

Diode On Terminal Strip (if noted)

	Low Current Coils Group 2	Drive Transistor	Driver Ouput Board	Power Line Color	Power Line Connection	Power Voltage	Drive Transistor Control Line Color	D.T. Control Line Connect	Coil GA-Turn or Bulb Type
#25	FLASH: BACKPANEL LEFT (BLUE)	Q25	▲ I/O Power Driver ▼	ORANGE	J6-P10	20v DC	BLK-BRN	J6-P1	#89 Bulb 165-5000-89
#26	FLASH: BACKPANEL CTR (RED)	Q26		ORANGE	J6-P10	20v DC	BLK-RED	J6-P2	#89 Bulb 165-5000-89
#27	FLASH: BACKPANEL RT (CLEAR)	Q27		ORANGE	J6-P10	20v DC	BLK-ORG	J6-P3	#89 Bulb 165-5000-89
#28	FLASH: BEER CAN (BRIAN)	Q28		ORANGE	J6-P10	20v DC	BLK-YEL	J6-P4	#89 Bulb 165-5000-89
#29	FLASH: MEG	Q29		ORANGE	J6-P10	20v DC	BLK-GRN	J6-P5	#89 Bulb 165-5000-89
#30	FLASH: RIGHT ORBIT (SPINNER)	Q30		ORANGE	J6-P10	20v DC	BLK-BLU	J6-P6	#89 Bulb 165-5000-89
#31	FLASH: POPS (BUMPERS)	Q31		ORANGE	J6-P10	20v DC	BLK-VIO	J6-P7	#89 Bulb 165-5000-89
#32	FLASH: LOWER RIGHT	Q32		ORANGE	J6-P10	20v DC	BLK-GRY	J6-P8	#89 Bulb 165-5000-89

Note: In Test Flash Lamps Menu ("Flash" Icon), Flashers tested are all Flash Lamps located between Q1-Q32 (This Game: Q23, Q25-Q32)

↻ **Coil Note:** ↻ **-ND** *means 'No Diode'. -00**B** or -00**T** can be used for coil replacements, but the diode must be removed. Call for more info.*

COIL MENU: SINGLE COIL & CYCLING COIL

COIL & FLASH LAMP LOCATIONS

{Coils Detailed Chart Table [#1 – #32] on the prev. page}

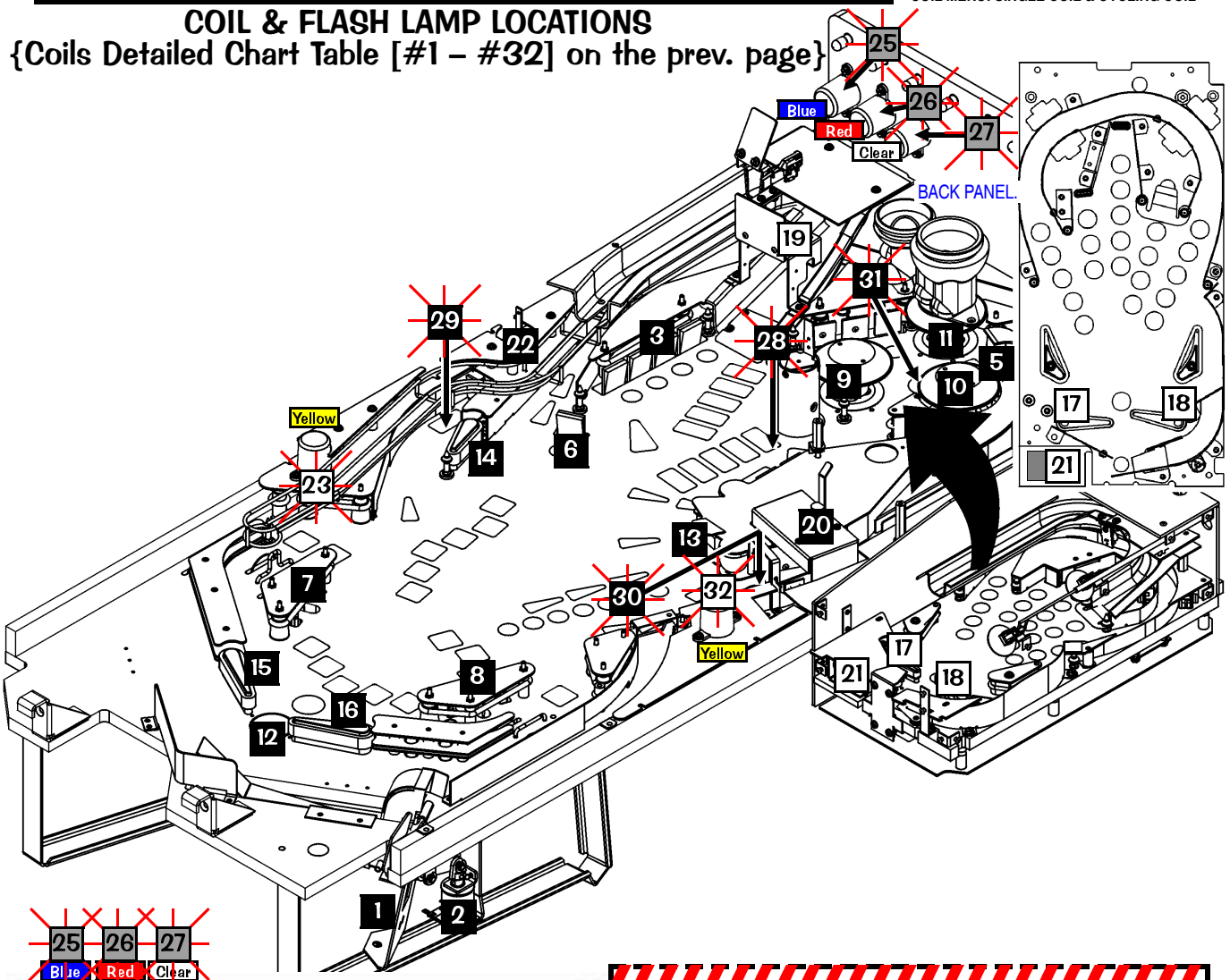

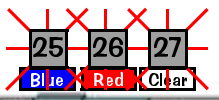

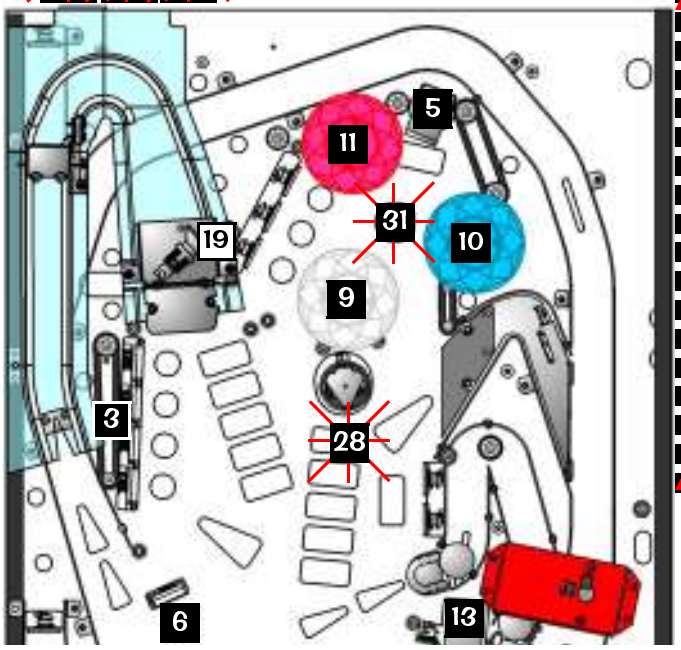

Typical Coil Wiring & Schematic

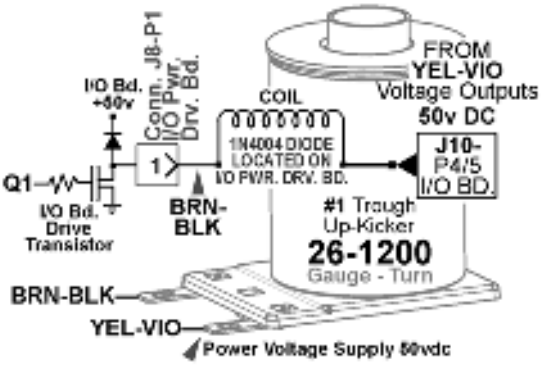

= Coils / Flash Lamps above Playfield.

= Coils / Flash Lamps below Playfield.

= Coils / Flash Lamps on Back Panel.

Color = Color of Mini-Mars or Flash Lamp Bulb.

Flash

Coil Q24 is Optional.
If either a Coin Meter, Token Dispenser or Knocker (all optional equipment) is required, call Technical Support for more information, 1-800-542-5377 or 1-708-345-7700.

STANDARD ADJUSTMENT 1

GO TO ADJUSTMENTS MENU: STANDARD ADJUSTMENTS [#1 – #63]

Peform the below steps to review the adjustments. Enter the **SERVICE MENU**, then enter the **STANDARD ADJUSTMENTS MENU**. *For adjustment definitions or summary, review Section **3**, Chapter **4**, **GO TO ADJUSTMENTS MENU**. See Section **3**, Chapter **5**, **GO TO INSTALLS MENU** (via the **UTILITIES MENU**), to easily change all adjustments required depending on the Install Type (Easy, Hard, 5-Ball, Home Play, etc.) desired.*

Step 1 Press **[SELECT]**. Press **[BACK]** to exit or escape at any time.

Step 2 Press **[>]**. Go to the "ADJ" *Icon.* Press **[SELECT]**.

Step 3 ... "S.P.I." *Icon.* Press **[SELECT]**.

Step 4 **STANDARD ADJUSTMENT #1** appears with the Adjustment Name **[REPLAY TYPE]** flashing. With the Adjustment Name flashing, press **[<] [>]** to move between adjustments.

Step 5: To change the Adjustment Setting, press **[SELECT]**. With the Adjustment Setting flashing, press **[<] [>]** repeatedly until the desired setting appears. Press the **[SELECT]** to "install" the change. The Adjustment Comment *(bottom text line)* will indicate **[INSTALLED/FACTORY DEFAULT]**, if the Factory Default Setting is selected *or* **[INSTALLED]** if the change is not the Factory Default Setting.

STANDARD ADJUSTMENTS [#1 – #63] ▼

Nr.	STANDARD ADJUSTMENT NAME	USA DEFAULT	YOUR SETTING
1	REPLAY TYPE	AUTO	
2	‡ REPLAY PERCENTAGE	10%	
3	‡ REPLAY AWARD	CREDIT	
4	‡ REPLAY LEVELS	1	
5	‡ AUTO REPLAY START	20,000,000	
6	‡ DYNAMIC REPLAY START	60,000,000	
7	‡ REPLAY LEVEL #1	15,000,000	
8	‡ REPLAY LEVEL #2	30,000,000	
9	‡ REPLAY LEVEL #3	45,000,000	
10	‡ REPLAY LEVEL #4	60,000,000	
11	‡ REPLAY BOOST	YES	
12	SPECIAL LIMIT	1	
13	‡ SPECIAL PERCENTAGE	10%	
14	SPECIAL AWARD	CREDIT	
15	FREE GAME LIMIT	5	
16	EXTRA BALL LIMIT	5	
17	‡ EXTRA BALL PERCENTAGE	25%	
18	GAME PRICING	USA 10	
19	MATCH PERCENTAGE	9%	
20	MATCH AWARD	CREDIT	
21	BALLS PER GAME	3	
22	TILT WARNINGS	2	
23	CREDIT LIMIT	30	
24	ALLOW HIGH SCORES	YES	
25	HIGH SCORE AWARD	CREDIT	
26	GRAND CHAMPION AWARDS	1	
27	HIGH SCORE #1 AWARDS	1	
28	HIGH SCORE #2 AWARDS	0	
29	HIGH SCORE #3 AWARDS	0	
30	HIGH SCORE #4 AWARDS	0	
31	GRAND CHAMPION SCORE	75,000,000	

Nr.	STANDARD ADJUSTMENT NAME	USA DEFAULT	YOUR SETTING
32	HIGH SCORE #1	55,000,000	
33	HIGH SCORE #2	40,000,000	
34	HIGH SCORE #3	30,000,000	
35	HIGH SCORE #4	25,000,000	
36	HSTD INITIALS	3 INITIALS	
37	HSTD RESET COUNT	2000	
38	FREE PLAY	NO	
39	LANGUAGE	ENGLISH	
40	PLAYER LANGUAGE SELECT	YES	
41	CUSTOM MESSAGE	ON	
42	FLASH LAMP POWER	NORMAL	
43	COIL PULSE POWER	NORMAL	
44	KNOCKER VOLUME	NORMAL	
45	GAME RESTART	YES	
46	BILL VALIDATOR	NO	
47	MUSIC VOLUME	1	
48	BALL SAVE TIME	0:05	
49	TIMED PLUNGER	OFF	
50	FLIPPER BALL LAUNCH	OFF	
51	COINDOOR BALL SAVER	NO	
52	COMPETITION MODE	NO	
53	CONSOLATION BALL	YES	
54	FAST BOOT	YES	
55	Q24 OPTION	COIN METER	
56	TICKET DISPENSER	NO	
57	PLAYER COMPETITION	YES	
58	TEAM SCORES	NO	
59	LOCATION ID	0	
60	GAME ID	0	
61	TIME FORMAT	12-HOUR	
62	COIN INPUT DELAY	30	
63	LOST BALL RECOVERY	YES	

Factory Defaults Settings are subject to change during production *(especially Standard Adjustments 2, 4, 5, 13, 16-17, 19, 31-35 & 47).*
‡ Not all Standard Adjustments are shown. Depending on the setting (whether Factory Default or if changed by the operator), associated adjustments do not appear, if not required. ***Note:*** *If **Game Dip Switch** other than USA is installed, different Defaults will appear.*

GO TO ADJUSTMENTS MENU: FEATURE ADJUSTMENTS [#1 – #26]

Peform the below steps to review the adjustments. Enter the **SERVICE MENU**, then enter the **FEATURE ADJUSTMENTS MENU**. *For adjustment definitions or summary, review Section **3**, Chapter **4**, **GO TO ADJUSTMENTS MENU**. See Section **3**, Chapter **5**, **GO TO INSTALLS MENU** (via the **UTILITIES MENU**), to easily change all adjustments required depending on the Install Type (Easy, Hard, 5-Ball, Home Play, etc.) desired.*

Step 1 Press **[SELECT]**. Press **[BACK]** to exit or escape at any time.

Step 2 Press **[>]**. Go to the "ADJ" *Icon.* Press **[SELECT]**.

Step 3 Press **[>]**. Go to the "F.G." *Icon.* Press **[SELECT]**.

Step 4 **FEATURE ADJUSTMENT #1** appears with the Adjustment Name **[ADULT CONTENT ENABLED]** flashing. With the Adjustment Name flashing, press **[<] [>]** to move between adjustments.

Step 5: To change the Adjustment Setting, press **[SELECT]**. With the Adjustment Setting flashing, press **[<] [>]** repeatedly until the desired setting appears. Press the **[SELECT]** to "install" the change. The Adjustment Comment *(bottom text line)* will indicate **[INSTALLED/FACTORY DEFAULT]**, if the Factory Default Setting is selected *or* **[INSTALLED]** if the change is not the Factory Default Setting.

FEATURE ADJUSTMENTS [#1 – #26] ▼

Nr.	FEATURE ADJUSTMENT NAME	USA DEFAULT	YOUR SETTING
1	ADULT CONTENT ENABLED	ADULT	
2	POPS AT BALL START	1	
3	PINBALL SPELLOUT DIFFICULTY	MEDIUM	
4	MINI CHRIS LETTERS SPOTTED	0	
5	MINI MEG LETTERS SPOTTED	0	
6	MINI PETER LETTERS SPOTTED	0	
7	MINI LOIS LETTERS SPOTTED	0	
8	MINI BRIAN LETTERS SPOTTED	0	
9	MINI PLAYFIELD MIN. PLAY TIME	15	
10	MINI PLAYFIELD MAX PLAY TIME	30	
11	MINI PF TIME STEWIE INCREMENT	1	
12	LETTERS PER MINI PF SHOT	2	
13	MINI PLAYFIELD ENDING	SDN DEATH	

Nr.	FEATURE ADJUSTMENT NAME	USA DEFAULT	YOUR SETTING
14	FART MULTIBALL DIFFICULTY	MEDIUM	
15	CHRIS DIFFICULTY	MEDIUM	
16	SHOW MINI FLIPPERS	YES	
17	POPS CARRYOVER	NO	
18	TV DIFFICULTY	HARD	
19	LEFT RAMP DIFFICULTY	MEDIUM	
20	BALL SAVER POST TIME	9	
21	RAISE DEATH MULTIBALLS	3	
22	DISABLE BALL SAVER POST	NO	
23	DISABLE 4-BANK	NO	
24	DISABLE 1-BANK	NO	
25	DISABLE MINI PLAYFIELD	NO	
26	SMART MINIPF ERROR CHECK	YES	

Factory Defaults Settings are subject to change during production
Note: *If **Game Dip Switch** other than USA is installed, different Defaults will appear.*

GO TO AUDITS MENU: EARNINGS AUDITS [#1 – #13] / STANDARD AUDITS [#1 – #59]

Perform the below steps to review the audits. Enter the **SERVICE MENU**, then enter the **EARNINGS AUDITS** *or* **STANDARD AUDITS MENUS**. *For audit definitions or summary, review Section **3**, Chapter **3**, **GO TO AUDITS MENU**. Try the "**DUMP AUDITS TO USB**" Feature to create a text file of your audits. Don't forget to set the DATE & TIME in the **UTILITIES MENU**. See Section **3**, Chapter **5**, **GO TO UTILITIES MENU**, for more information.*

Step 1 Press **[SELECT]**.
Press **[BACK]** to exit or escape at any time.

Step 2 Press **[>]**. Go to the "AUD" *Icon.*
Press **[SELECT]**.

Step 3 Press **[>]**. Go to the "EARN" *or* "S.P.I." *Icon.*
Press **[SELECT]**.

Step 4 Press **[<] [>]** to move between audits.

EARNINGS AUDITS [#1 – #13] ▼

Nr.	EARNINGS AUDIT NAME	YOUR RESULT
1	TOTAL PAID CREDITS	
2	FREE GAME PERCENTAGE	
3	AVERAGE BALL TIME	
4	AVERAGE GAME TIME	
5	COINS THROUGH LEFT SLOT	
6	COINS THROUGH RIGHT SLOT	
7	COINS THROUGH CENTER SLOT	

Nr.	EARNINGS AUDIT NAME	YOUR RESULT
8	COINS THROUGH FOURTH SLOT	
9	COINS THROUGH FIFTH SLOT	
10	TOTAL COINS	
11	TOTAL EARNINGS	
12	METER CLICKS	
13	SOFTWARE METER	

STANDARD AUDITS [#1 – #59] ▼

Nr.	STANDARD AUDIT NAME	YOUR RESULT
1	TOTAL BALLS PLAYED	
2	TOTAL EXTRA BALLS	
3	EXTRA BALL PERCENTAGE	
4	REPLAY 1 AWARDS	
5	REPLAY 2 AWARDS	
6	REPLAY 3 AWARDS	
7	REPLAY 4 AWARDS	
8	TOTAL REPLAYS	
9	REPLAY PERCENTAGE	
10	TOTAL SPECIALS	
11	SPECIAL PERCENTAGE	
12	TOTAL MATCHES	
13	HIGH SCORE AWARDS	
14	HIGH SCORE PERCENT	
15	TOTAL FREE PLAYS	
16	TOTAL PLAYS	
17	0.0M – 1.99M SCORES	
18	2.0M – 3.99M SCORES	
19	4.0M – 5.99M SCORES	
20	6.0M – 7.99M SCORES	

Nr.	STANDARD AUDIT NAME	YOUR RESULT
21	8.0M – 9.99M SCORES	
22	10.0M – 12.49M SCORES	
23	12.5M – 14.99M SCORES	
24	15.0M – 17.49M SCORES	
25	17.5M – 19.99M SCORES	
26	20.0M – 24.99M SCORES	
27	25.0M – 29.99M SCORES	
28	30.0M – 39.99M SCORES	
29	40.0M – 49.99M SCORES	
30	50.0M – 74.99M SCORES	
31	75.0M – 99.99M SCORES	
32	100.0M – 149.99M SCORES	
33	150.0M+ SCORES	
34	AVERAGE SCORES	
35	SERVICE CREDITS	
36	BALL SEARCH STARTED	
37	LOST BALL FEEDS	
38	LOST BALL GAME STARTS	
39	LEFT DRAINS	
40	CENTER DRAINS	

Nr.	STANDARD AUDIT NAME	YOUR RESULT
41	RIGHT DRAINS	
42	TILTS	
43	TOTAL BALLS SAVED	
44	LEFT FLIPPER USED	
45	RIGHT FLIPPER USED	
46	0 – 1 MINUTE GAMES	
47	1 – 1.5 MINUTE GAMES	
48	1.5 – 2 MINUTE GAMES	
49	2 – 2.5 MINUTE GAMES	
50	2.5 – 3 MINUTE GAMES	
51	3 – 3.5 MINUTE GAMES	
52	3.5 – 4 MINUTE GAMES	
53	4 – 5 MINUTE GAMES	
54	5 – 6 MINUTE GAMES	
55	6 – 8 MINUTE GAMES	
56	8 – 10 MINUTE GAMES	
57	10 – 15 MINUTE GAMES	
58	15+ MINUTE GAMES	
59	RECENT REPLAY PERCENT	

Note: *Audits are subject to change (with or without notice).*

FEATURE AUDIT 1

GO TO AUDITS MENU: FEATURE AUDITS [#1 – #70]

Perform the below steps to review the audits. Enter the **SERVICE MENU**, then enter the **FEATURE AUDITS MENU**. *Try the "**DUMP AUDITS TO USB**" Feature to create a text file of your audits. Don't forget to set the DATE & TIME in the **UTILITIES MENU**. See Section **3**, Chapter **5**, **GO TO UTILITIES MENU**, for more information.*

Step 1 Press **[SELECT]**. Press **[BACK]** to exit or escape at any time.

Step 2 Press **[>]**. Go to the "AUD" *Icon.* Press **[SELECT]**.

Step 3 Press **[>]**. Go to the "F.G." *Icon.* Press **[SELECT]**.

Step 4 Press **[<] [>]** to move between audits.

FEATURE AUDITS [#1 – #70] ▼

Nr.	FEATURE AUDIT NAME	YOUR RESULT
1	LEFT OUTLANE	
2	RIGHT OUTLANE	
3	LOIS RETURN LANE	
4	DEATH RETURN LANE	
5	RIGHT RETURN LANE	
6	MEG SHOTS	
7	CHRIS SHOTS	
8	LEFT RAMP	
9	DEATH TARGET	
10	4-BANK DROPS COMPLETED	
11	MONKEY TARGET	
12	BEER CAN SHOTS	
13	DRUNKEN CLAM	
14	UTURN SHOTS	
15	STEWIE SHOTS	
16	LOIS SHOTS	
17	SPINNERS	
18	TV HOLE	
19	LEFT NEWTON ROLL OVER	
20	RIGHT NEWTON ROLL OVER	
21	PIRATE TARGET	
22	STEWIE PINBALL STARTS	
23	AVG. STEWIE PINBALL TIME	

Nr.	FEATURE AUDIT NAME	YOUR RESULT
24	MINI BRIAN COMPLETES	
25	MINI MEG COMPLETES	
26	MINI PETER COMPLETES	
27	MINI LOIS COMPLETES	
28	MINI CHRIS COMPLETES	
29	STEWIE MULTIBALL STARTS	
30	FART MULTIBALL STARTS	
31	CRAZY CHRIS STARTS	
32	MYSTERY LIT	
33	MYSTERY COLLECTED	
34	MYS. [MYSTERY] SPECIAL	
35	MYS. [MYSTERY] NOT SPECIAL	
36	MYS. [MYSTERY] POPS AT MAX	
37	MYS. [MYSTERY] EXTRA BALL	
38	MYS. [MYSTERY] START MBALL	
39	MYS. [MYSTERY] HOLD BONUS	
40	MYS. [MYSTERY] COLLECT BONUS	
41	MYS. [MYSTERY] LIGHT TV MODE	
42	MYS. [MYSTERY] SUPER	
43	MYS. [MYSTERY] DEATH	
44	MYS. [MYSTERY] POST	
45	MYS. [MYSTERY] PINBALL	
46	MYS. [MYSTERY] BIG POINTS	

Nr.	FEATURE AUDIT NAME	YOUR RESULT
47	MYS. [MYSTERY] BIGGER POINTS	
48	MYS. [MYSTERY] BONUS X	
49	MYS. [MYSTERY] SPOT CAST	
50	MYS. [MYSTERY] CRAZY CHRIS	
51	CAN COLLECT BEERS	
52	CAN GIGGITY GIGGITY	
53	CAN HAPPY HOUR	
54	CAN REMEMBER WHEN	
55	CAN LARD MULTIBALL	
56	BUMP PETER	
57	BUMP LOIS	
58	BUMP MEG	
59	BUMP CHRIS	
60	BUMP BRIAN	
61	BUMP STEWIE	
62	TV LIT	
63	GOOD OLD BOYS STARTS	
64	SUPER GRIFFINS STARTED	
65	CHICKEN FIGHT STARTED	
66	SEXY PARTY STARTED	
67	IPECAC CONTEST STARTED	
68	LARD BOZO SET LIGHT	
69	LARD BOZO STARTS	
70	GAME POST 2MIN GAME	

Note: *Audits are subject to change (with or without notice).*

Domestic Pinball & Redemption Distributors Map

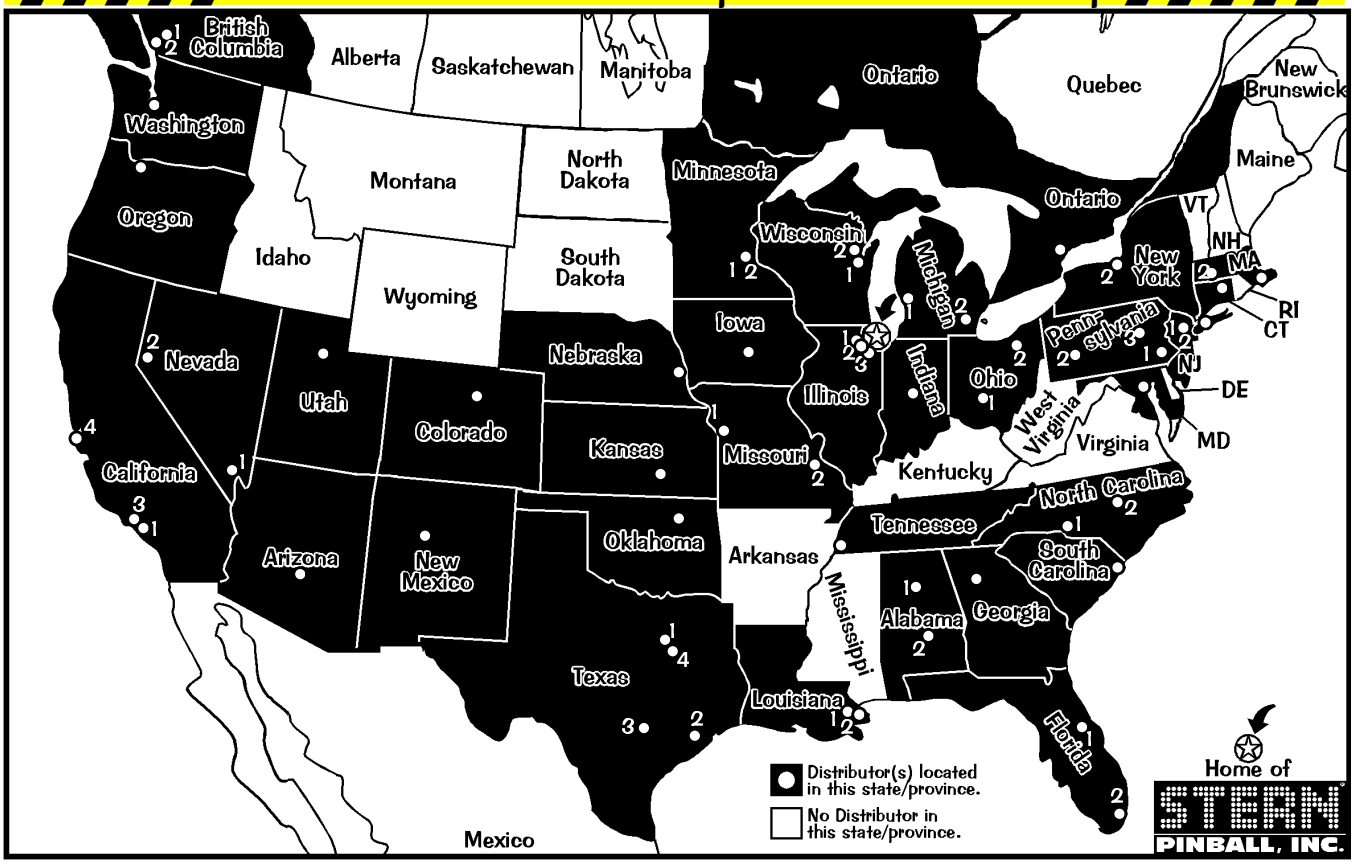

International Distributors Map

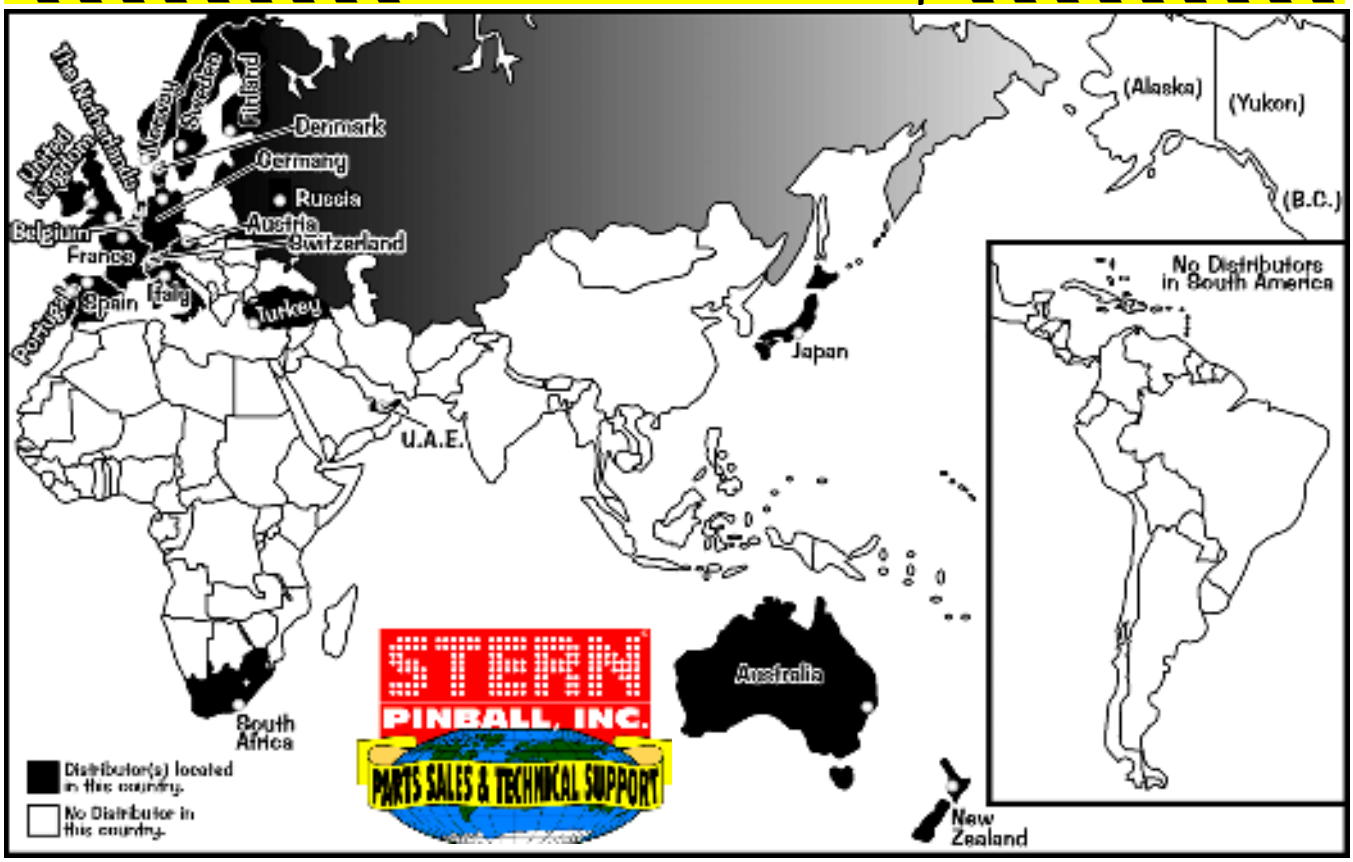

For *Parts & Service*, call your nearest Distributor. View the above maps & the directories on the next page to locate your closest Distributor in your state, province, or country. Distributors and phone numbers are subject to change. Call **Stern® Pinball, Inc.** *(Parts Sales & Technical Support)* with any questions or if your Distributor cannot help you: **1-800-542-5377** (in **USA** or **Canada**) or **1-708-786-5466**. Visit us at www.SternPinball.com for current Distributor Information & other pinball needs.

FAMILY GUY

Find-It-In-Front:
Dr. Pinball

Domestic Pinball & Redemption Distributors Directory

ALABAMA
Birmingham Vending
Birmingham (1)
205-324-7526

Franco Distributing
Montgomery (2)
334-834-3455

ARIZONA
Betson West
Phoenix
480-380-8857

Mountain Coin
Phoenix
602-269-7596

CALIFORNIA
Betson West
Buena Park (1)
714-228-7500
So. San Francisco (2)
650-952-4220

C.A. Robinson
Los Angeles (3)
323-735-3001
San Francisco (4)
650-871-4280

COLORADO
Game Exchange of CO
Denver
303-288-6500 (sales)

Mountain Coin
Denver
303-427-2133

CONNECTICUT
TDM Distributing
Williamantic
860-423-1403

FLORIDA
Birmingham Vending
Orlando (1)
407-425-1505

Brady Distributing
Miami [Miramar] (2)
954-874-1100
Orlando (1)
407-872-1666

GEORGIA
Greater Southern Dist.
Smyrna
770-803-3040

ILLINOIS
American Vending
Elk Grove Village (1)
847-439-9400

Betson Midwest
Bensenville (2)
630-238-9400

Complete Sales & Service
East Dundee (3)
224-293-6600

INDIANA
Shaffer Distributing
Indianapolis
317-899-2530

IOWA
Greater America Dist.
Johnston
515-278-4455

Moss Distributing
Des Moines
515-266-6422

KANSAS
United Dist., Inc.
Wichita
316-263-6181

LOUISIANA
AMA Distributors, Inc.
Metairie (1)
504-835-3232

New Orleans Novelty
New Orleans (2)
504-888-3500

MARYLAND
Betson Enterprises
Baltimore
410-646-4100

Parts & Service Only:

Weiner Distributing
Baltimore
410-525-2600

MASSACHUSETTS
Betson Ent. (NECO)
Norwood (1)
781-769-9760

Gekay Sales
E. Longmeadow (2)
413-525-2700

MICHIGAN
Shaffer Distributing
Livonia (2)
734-432-1040

MINNESOTA
Lieberman Companies
Minneapolis (1)
800-879-0321

Moss Distributing
Eagan (2)
952-881-8770

MISSOURI
Greater America Dist.
Kansas City (1)
816-531-4300

Moss Distributing
Kansas City (1)
816-231-6600

Shaffer Distributing
St. Louis (2)
314-645-3393

NEBRASKA
Central Dist.
Omaha
402-493-5600

Greater America Dist.
Omaha
402-553-2812

NEVADA
Mountain Coin
Las Vegas (1)
702-798-0900

Reno Game Sales
Reno (2)
775-829-2080

NEW JERSEY
American Vending Sales
Lakewood (2)
732-364-1199

Betson Enterprises
Carlstadt (1)
201-438-1300

Jack Guarnieri Service Co., Inc. (Pinballsales.com)
Lakewood (2)
800-473-5225

NEW MEXICO
Mountain Coin
Albuquerque
505-345-7706

NEW YORK
Betson Enterprises
New Hyde Park (2)
516-354-4647
Syracuse (3)
315-437-2400

Parts & Service Only:

Bay Coin
Richmond Hill (1)
718-291-5757

NORTH CAROLINA
Brady Distributing
Charlotte (1)
704-357-6284

Parts & Service Only:

Operators Distributing
Archdale (2)
336-884-5714

OHIO
Shaffer Distributing
Columbus (1)
614-421-6800
Valley View (2)
216-447-4486

OKLAHOMA
Galaxy Distributing
Tulsa
918-835-1166

OREGON
Mountain Coin
Portland
503-234-5491

Specialty Coin Products
Portland
503-786-9200
Toll-Free
800-987-4946

PENNSYLVANIA
Betson Enterprises
King Of Prussia (1)
610-265-1155
Pittsburgh (2)
412-331-8703

Superior Amusements
Wilkes-Barre (3)
570-824-9994

Shaffer Distributing
Pittsburgh (2)
412-920-1300

SOUTH CAROLINA
Parts & Service Only:

Green Coin
Mrytle Beach
843-626-1900

TENNESSEE
Brady Distributing
Memphis
901-345-7811

Parts & Service Only:

Green G.A.M.E.S.
Memphis
901-353-1000

TEXAS
Amusement Distributors
San Antonio (3)
210-225-3844

Betson Texas
Dallas (1)
214-638-4900

Commercial Music
Dallas (1)
214-741-6381

Discount Arcade Games
Crowley (1)
817-297-0440

H.A. Franz, & Co.
Houston (2)
713-523-7366
San Antonio (3)
210-226-6322

Master Sales
Corsicana (4)
903-874-4740

UTAH
Mountain Coin
Salt Lake City
801-262-5494

Struve Distributing
Salt Lake City
801-328-1636

WASHINGTON
Mountain Coin
Auburn (Seattle)
206-682-5700

WISCONSIN
Pioneer Sales & Svc.
Green Bay (1)
920-336-5800
Menomonee Falls (2)
262-781-1420

Lieberman Companies
Menomonee Falls (2)
800-236-1880

CANADA

ONTARIO
Starburst Coin Mach.
Toronto
416-251-2122

BRITISH COLUMBIA
Parts & Service Only:

Can. Coin Machine
Burnaby (1)
604-420-4008

Parts & Service Only:

Pacific Vending
Vancouver (2)
604-324-2164

Note: *For states and Canadian Provinces which do not have Distributors, call the neighboring state or province with the city closest to you (indicated with a white dot). States or Provinces with more than 1 city containing a distributor are numbered. View the map on the previous page.*

Note: *From inside the US, use prefix 1-.*

Note: *Distributors are subject to change.* *Visit us at* **www.SternPinball.com** *for current Distributor Information.*

International Distributors Directory

AUSTRALIA
Amusement Mach. Dist.
Matraville
+61 29 316 6000

AUSTRIA
Parts & Service Only:

R. Rupp
Leibnitz
+43 3452 86105

BELGIUM
NAMUSCO
Bruxelles
+32 (0) 2 414 4596

DENMARK
JK Automater A/S
Thisted
+45 97 92 09 25

ENGLAND
see UNITED KINGDOM

FINLAND
Pelika net Oy
Vantaa
+358 (0) 9 290 450

FRANCE
Avranches Automatic
Ducey
+33 23 389 6162

SFA
Paris
+33 15 326 8080

GERMANY
ADP Gauselmann
Espelkamp
+49 5741 27 33 84

Bergmann Int'l Gaming
Rellingen
+49 4101 3 02 40
Witten
+49 2302 28 25 40

Merkur Gaming GmbH
Luebbecke
+49 5772 4 94 22

HOLLAND
see THE NETHERLANDS

ITALY (RSM)
Tecnoplay S.A.
San Marino
+39 549 901 508

JAPAN
HIC, Inc.
Chiba-Ken
+04 7176 4040

THE NETHERLANDS
JVH Gaming Products
Tilburg
+31 13 595 3200

NEW ZEALAND
Coin Cascade Ltd.
Christchurch
+643 338 1411

Parts & Service Only:

Amco Machine Supplies
Auckland
+64 9846 7606

NORWAY
Parts for Pinballs
Sandefjord
+47 9242 1402

Vendcomatic AS
Oslo
+47 2 291 8383

PORTUGAL
Jacinto & Martins, S.A.
Belas
+35 1214 3256 24 *or*
+35 1214 3256 38

RUSSIA
Kalmancor Enterprise Ltd
Moscow
+0 95 124 5601 *or*
+0 95 124 5613

O.D.A. Game Machines
Moscow
+0 95 219 2949 *or*
+0 95 219 8917

SOUTH AFRICA
K & W Amusements
Port Elizabeth
+27 41 484 3344 *or*
+27 41 484 2940

SPAIN
Comercial Cocamatic
Coslada (Madrid)
+34 91 671 6980

SWEDEN
Bjuvia Fritid AB
Bjuv
+46 4238 6900

SWITZERLAND
Novomat, A.G.
Harkingen
+41 62 388 8961

TAIWAN, R.O.C.
SEC
Taichung
+886 4 229 10646

TURKEY
Balo
Marmaris
+0 252 413 83 35

UNITED ARAB EMIRATES
Warehouse of Games
Dubai
+971 4 883 5880

UNITED KINGDOM
Electrocoin
London, England
+44 208 965 2055

Parts & Service Only:

Electrocoin Aftersales
Cardiff, S. Glamorgan
+44 292 045 0345

Note: *From inside the US, use prefix 011-.*

POWER REQUIREMENTS

This game ***must be connected to a properly grounded outlet to reduce shock hazard*** & insure proper game operation. *See Sec.* ***5****, Schematics & Troubleshooting, Chp.* ***3****, Cabinet Wiring (Transformer Power Wiring), for transformer connections required for* ***Normal****,* ***High****, and* ***Low Line*** *conditions.*

Normal Line:	**110v AC - 125v AC @ 60Hz**	
Domestic use an 8AMP 250v Slo-Blo Fuse.	**AVG OPERATION** CURRENT: **2.8AMP** WATTAGE: **329w**	**MAX OPERATION** CURRENT: **8AMP** WATTAGE: **940w**
High Line:	**218v AC - 240v AC @ 50Hz**	
Export use 2x 5AMP 250v Slo-Blo Fuses. (*England & Hong Kong use an 8AMP 250v S/B Fuse.)	**AVG OPERATION** CURRENT: **1.8AMP** WATTAGE: **412w**	**MAX OPERATION** CURRENT: **5AMP** | **8AMP*** (England & Hong Kong use an 8A Fuse.) WATTAGE: **1145w** | **1832w***
Low Line:	**95v AC - 108v AC @ 50Hz / 60Hz**	
Export Japan Only use an 8AMP 250v Slo-Blo Fuse.	**AVG OPERATION** CURRENT: **2.6AMP** WATTAGE: **264w**	**MAX OPERATION** CURRENT: **8AMP** WATTAGE: **812w**

TRANSPORTATION

BEFORE TRANSPORTING

To reduce the possibility of damage, observe **ALL** precautions whenever transporting the game.

Read & follow *Section* ***1****, Chapter* ***1****,* ***Pinball Game Set-Up Procedures****, and* ***How to Secure the Backbox for Transporting****.* Remove the legs and secure the game within the transporting vehicle.

SAVE AND RETAIN ALL PRINTED INFORMATION INSIDE THE CABINET !

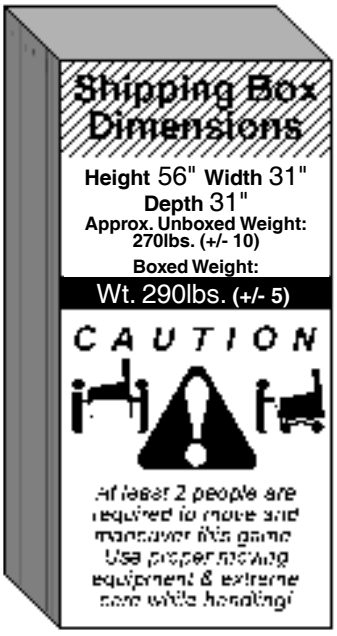

GAME DIMENSIONS

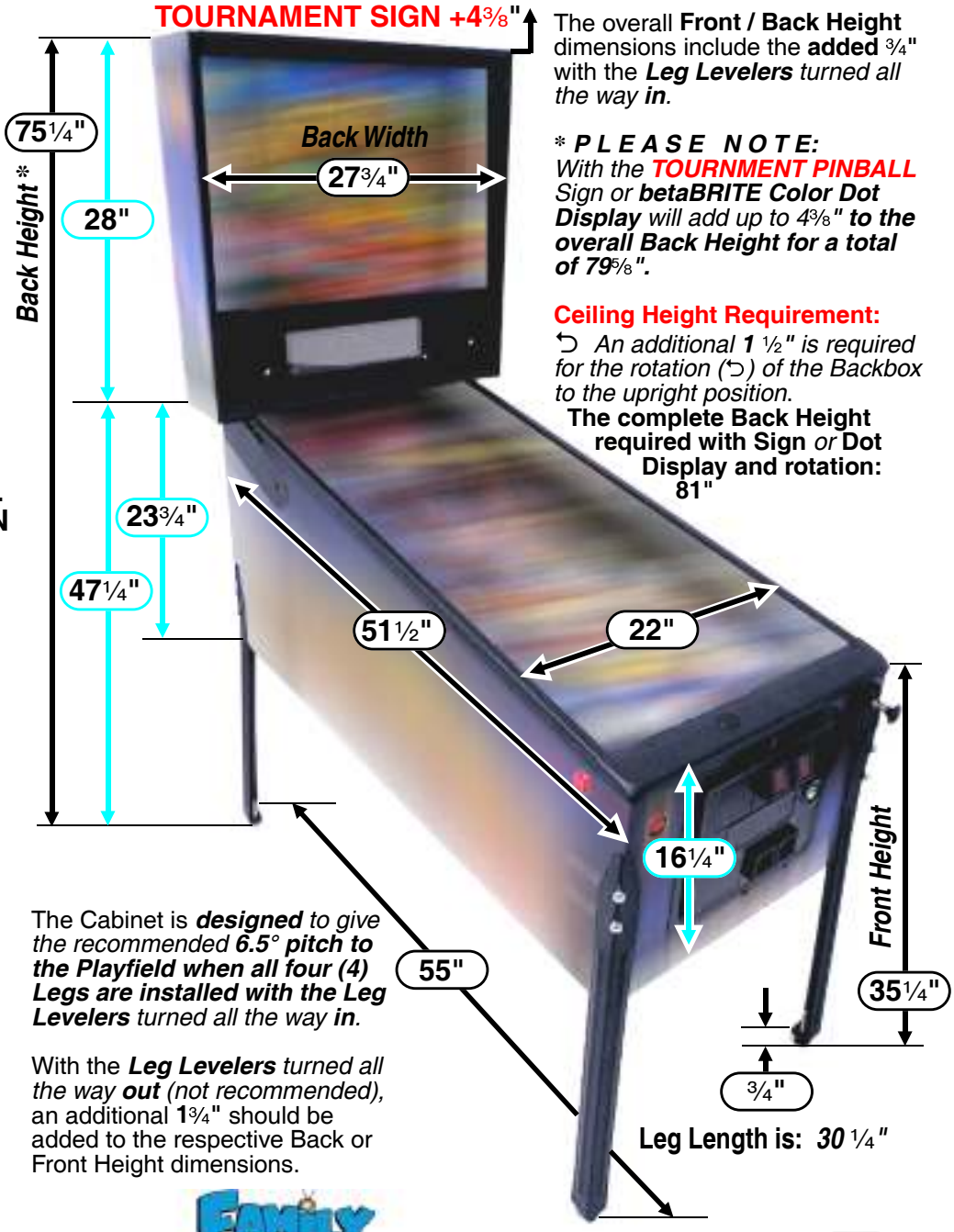

The overall **Front / Back Height** dimensions include the **added** ¾" with the ***Leg Levelers*** *turned all the way* ***in****.*

**** P L E A S E N O T E:***
With the ***TOURNMENT PINBALL*** *Sign or* ***betaBRITE Color Dot Display*** *will add up to 4⅜"* ***to the overall Back Height for a total of 79⅝".***

Ceiling Height Requirement:

↺ *An additional* ***1*** *½" is required for the rotation (↺) of the Backbox to the upright position.*

The complete Back Height required with Sign *or* Dot Display and rotation: 81"

The Cabinet is ***designed*** *to give the recommended* ***6.5° pitch to the Playfield when all four (4) Legs are installed with the Leg Levelers*** *turned all the way* ***in****.*

With the ***Leg Levelers*** *turned all the way* ***out*** *(not recommended),* an additional **1¾"** should be added to the respective Back or Front Height dimensions.

Leg Length is: *30 ¼"*

Family Guy™ Pinball

How To Update Your Game Code for the New S.A.M. System ..... Inside Front

Find-It-In-Front: Dr. Pinball ..... DR. ❶ – ⓰

- ▶ For Proper Operation of this Pinball Game, (4) Pinballs must be installed in the Ball Trough! // Backbox Fuses, Cabinet Fuses, Playfield Fuses and Cabinet Switches ..... DR. ❶
- ▶ Find-It-In-Front: Dr. Pinball Section Explained ..... DR. ❷
  - ▷ Service Switch X4 Set Overview ▷ Functions in Game or Attract Mode ▷ Functions in the Service Menu
- ▶ Diagnostic Aids ..... DR. ❸
- ▶ CPU Dip Switch Settings ..... DR. ❸
- ▶ Switch Matrix Grid (#1 – #64) and Dedicated Switches (D-1 – D-32) ..... DR. ❹
- ▶ Switch Locations ..... DR. ❺
- ▶ Lamp Matrix Grid (#1 – #80) ..... DR. ❻
- ▶ Lamp Locations ..... DR. ❼
- ▶ Coils Detailed Chart Table ..... DR. ❽
- ▶ Coil & Flash Lamp Locations ..... DR. ❾
- ▶ Go To Adjustments Menu: Standard Adjustments [#1 – #63] ..... DR. ❿
- ▶ Go To Adjustments Menu: Feature Adjustments [#1 – #26] ..... DR. ⓫
- ▶ Go To Audits Menu: Earnings Audits [#1 – #13] / Standard Audits [#1 – #59] ..... DR. ⓬
- ▶ Go To Audits Menu: Feature Audits [#1 – #70] ..... DR. ⓭
- ▶ Domestic Pinball & Redemption Distributors Map // International Distributors Map ..... DR. ⓮
- ▶ Domestic Pinball & Redemption Distributors Directory // International Distributors Directory ..... DR. ⓯
- ▶ Power Requirements // Transportation // Game Dimensions ..... DR. ⓰

Sections 1-5, General Table of Contents ..... i – ii

Section 1, Chapter 1 of 1, After Set-Up ..... 1 – 4

- ▶ Pinball Game Set-Up Procedures 1
  - ▷ Backbox (backglass removed): ▷ Playfield (glass removed): ▷ With the Coin Door Open:
- ▶ Pinball Game Set-Up Future Reference 1-3
- ▶ How to Secure the Backbox ... // Leg Leveler Adjustment // Easy Access Service System - 2 Positions 4

Section 2, Chapter 1 of 1, Game Operation & Features ..... 5 – 6

- ▶ Start of Game Features 5
  - ▷ Starting a Normal Game ▷ Starting Team Play (Doubles!) ▷ Starting Tournament Play
- ▶ During Game Features 5
  - ▷ Feature Mode & Combination Shots ▷ Multiball ▷ Replay Feature
- ▶ End of Game Features 5
  - ▷ Game Endings ▷ Match Feature ▷ Entering Initials/Name
- ▶ Auto Percentaging 6
- ▶ Instruction Card 6

Section 3, Chapter 1 of 6, Service Menu System ..... 7 – 12

- ▶ Table of Contents for Section 3 7

Section 3, Chapter 2 of 6, Go To Diagnostics Menu ..... 13 – 20

Section 3, Chapter 3 of 6, Go To Audits Menu ..... 21 – 24

Section 3, Chapter 4 of 6, Go To Adjustments Menu ..... 25 – 34

Section 3, Chapter 5 of 6, Go To Utilities Menu ..... 35 – 40

Section 3, Chapter 6 of 6, Go To Tournament Menu ..... 41 – 42

Section 4, Chapter 1 of 2, Parts Identification & Location (The Pink Pages) ..... 43 – 64

- ▶ Table of Contents for Section 4, Chapter 1 43

Section 4, Chapter 2 of 2, Drawings for Major Assemblies & Ramps (The Blue Pages) ..... 65 – 94

- ▶ Table of Contents for Section 4, Chapter 2 65

Section 5, Chapter 1 of 4, Backbox Wiring ..... 95 – 98

- ▶ Table of Contents for Section 5 95

Section 5, Chapter 2 of 4, Playfield Wiring ..... 99 – 104

Section 5, Chapter 3 of 4, Cabinet and Coin Door Wiring ..... 105 – 108

Section 5, Chapter 4 of 4, Printed Circuit Boards (PCBs) ..... 109 – 138

Appendixes A - J, Table of Contents ..... End of Manual

- ▶ Stern Pinball, Inc. Limited Warranty // Cautions, Warnings & Notices ..... last page

GLOSSARY OF TERMS

A Followed after a number means "Amp." or Ampage in an expression relating to an electrical object. (e.g. 8**A**).

AC (Acronym) **A**lternating **C**urrent.

Adj. (Abbreviation) Adjustment(s).

Assy. (Abbreviation) Assembly.

Au. (Abbreviation) Audit(s).

Bd. (Abbreviation) Board.

BOT (Abbreviation) Bottom.

Brkt. (Abbreviation) Bracket.

Bridge Rectifier A configuration of a diode that allows current to flow in one direction producing both positive and negative pulsating DC Voltages.

Color Coding See Appendix H or I, Plastic Part Color Chart or Section 4, Chapter 1, Playfield - Plastic Posts & Spacers.

Combination (Combo) [Shot] Any variable pinball shot(s) made successively.

Conn. (Abbreviation) Connector.

CMOS Short for COSMOS (Complementary Symmetry M.O.S.); Complementary Metal-Oxide Semi-Conductor.

CN (Abbreviation) Connector (e.g. **CN**5-P3).

CT (Abbreviation) Center.

DC (Abbreviation) Direct Current.

DT (Abbreviation) Drop Target(s).

DOTS (Acronym) **D**iode **O**n **T**erminal **S**trip.

EB (Abbreviation) Extra Ball.

Eject Playfield surface device to kick ball back into play; Saucer.

EPROM (Acronym) **E**rasable **P**rogrammable **R**ead **O**nly **M**emory. Can be erased using UV Light and re-programmed.

e.g. (Abbreviation) Latin- Exempli gratia. For Example.

EOS (Acronym) **E**nd-**O**f-**S**troke (i.e. Switch for flipper).

F (Abbreviation) Fuse (i.e. F23).

GA-Turn Gauge & Turn describing the windings on a coil (e.g. 23-800, 23 is the gauge of wire and 800 is the amount of windings.

G.I. (Abbreviation) General Illumination (Lamps).

HWH (Abbreviation) Hex Washer Head.

IC (Acronym) **I**ntegrated **C**ircuit (As in after 24-Pin IC).

ID or I.D. (Acronym) **I**nside **D**imension.

i.e. (Abbreviation) Latin- Id est. That is.

IO or I/O (Abbreviation) Input / Output (e.g. I/O Power Driver Bd.)

LT, Lt. or L. (Abbreviation) Left.

Laser Kick A coil/plunger used above the playfield to kick pinball back into play.

LED (Acronym) **L**ight **E**mitting **D**iode.

Loop [Shot] Continuously up a ramp and back to the flipper.

Lwr. (Abbreviation) Lower.

Orbit [Shot] From the left or right flipper around the back rail of the playfield back to the flipper.

MB (Abbreviation) Magnet Board.

M-BALL or MBALL (Abbreviation) Multiball™ More than 1 ball in game play.

MID (Abbreviation) Middle

Non-Reflexive See Reflexive.

No. or Nº or # (Abbreviation) Number

NPF (Acronym) **N**o **P**roblem **F**ound.

N.C. or NC (Abbreviation) Normally Closed.

N.O. or NO (Abbreviation) Normally Open.

NS (Abbreviation) Not Stuffed. (Use in Part Listings, Sec. 5)

OD or O.D. (Abbreviation) Outside Dimension.

P (Abbreviation) Pin (e.g. CN5-**P**3).

PCB (Acronym) **P**rinted **C**ircuit **B**oard

P/F (Abbreviation) Playfield.

PIA LED (Acronym) **P**eripheral **I**nterface **A**dapter **L**ight **E**mitting **D**iode.. This is a diagnostic LED on the CPU; it should not be lit during normal operation of a pinball game.

Plumb Bob Tilt Weight on Tilt Assembly.

PPH (Abbreviation) Phillips Pan Head.

Pop(s) Another term for Turbo Bumper(s).

PPB (Acronym) Playfield Power Board ("Popcorn-Popping Bd.").

PREV (Abbreviation) Previous.

PSB (Abbreviation) Power Supply Board

RAM (Acronym) **R**andom **A**ccess **M**emory. RAM **can** store input instructions and supply output information.

Reflexive/Non-Reflexive **Reflexive**—Solenoid Drive Transistor is enabled directly by a switch closure on the (Relating to CPU Boards) solenoid assembly (Ver. 1/2).
Non-Reflexive—Solenoid Drive Transistor is enabled by the CPU after reading a switch closure in the Switch Matrix (Ver. 3). Also note: All CPU Boards are backwards compatible (e.g. Jurassic Park/Ver. 3 to Time Machine/ Ver. 2). Swapping a Ver. 2 Board to a Ver. 3 is not possible due to the special solenoids section (i.e. Slingshots, Turbo Bumpers, etc.) changing from ***REFLEXIVE*** to ***NON-REFLEXIVE*** on Ver. 3 Boards.

Relay An automatic switch operated by current in a coil.

ROM (Acronym) **R**ead **O**nly **M**emory. ROM **cannot** store input instructions but can supply output information. ROM can be programmed only once.

RMA (Abbreviation) Return Merchandise Authorization Number

RT, Rt. or R. (Abbreviation) Right; ("**R**" at the end of Target Assy. Part Nº signifies Target Insert is **R**eversed.)

RO (Abbreviation) Rollover (switches).

Saucer See Eject.

Scoop A hole into the playfield. A metal scoop is in place to guide the ball into the kick-back under the playfield.

Slam Tilt A switch which closes when the game is slammed into or the Coin Door is slammed shut. Depending on adjustable settings, will cancel game in play when the number of closures required is achieved.

SMB (Abbreviation) Shaker Motor Board.

Solenoid A coil used for Electro Magnetic devices such as relays, flippers, slingshots, etc.

SSFB (Abbreviation) Solid State Flipper Board.

STEP Refers to the service switches on the coin door.

Sub-Assy. (Abbreviation) Sub-Assembly.

S-U or S/U (Abbreviation) Stand-Up (targets).

TM (Abbreviation) Trademark

Transfer [Shot] Maneuvering the ball in play from one flipper to the other. With flipper in the up position and the ball cradled by that flipper one would activate the flipper button in a quick repetitive manner to bounce the ball to the other side. Skilled players can rebound the ball off the slingshot.

Tri-Ball Three balls in play.

TTL (Abbreviation) Transistor-Transistor Logic

Upr. (Abbreviation) Upper.

V or v (Abbreviation) Volt(s).

Ver. (Abbreviation) Version.

VUK (Acronym) **V**ertical **U**p-**K**icker (Super or Standard).

X (Abbreviation) "Times" A multiplier; also used in dimensions.

X-Ball An undetermined number of ball(s) during game play.

Zener Diode A semi-conductor diode used for voltage regulation. Application depends on reverse break-down voltage.

"-00B" "B" at the end of Coil Part Numbers signifies that the diode is attached to the bottom of the lug.

"-00T" "T" at the end of Coil Part Numbers signifies that the diode is attached to the top of the lug (the side nearest the coil-winding).

STERN® PINBALL, INC. LIMITED WARRANTY

STERN® PINBALL, INC., *("SELLER")* WARRANTS ONLY TO THE INITIAL PURCHASER OF ITS PRODUCTS THAT THE ITEMS LISTED BELOW ARE FREE FROM DEFECTS IN MATERIAL AND WORKMANSHIP UNDER NORMAL USE AND SERVICE FOR THE ***WARRANTY PERIOD SPECIFIED:***

PRINTED CIRCUIT BOARDS (GAME LOGIC):	**2 MONTHS**
DOT MATRIX DISPLAY BOARDS:	**9 MONTHS**

NO OTHER PARTS OF SELLER'S PRODUCT ARE WARRANTED.

WARRANTY PERIODS ARE EFFECTIVE FROM THE INITIAL DATE OF SHIPMENT FROM SELLER TO ITS AUTHORIZED DISTRIBUTORS.

SELLER'S SOLE LIABILITY SHALL BE, AT ITS OPTION, TO REPAIR OR REPLACE PRODUCTS WHICH ARE RETURNED TO SELLER DURING THE WARRANTY PERIODS SPECIFIED, PROVIDED:

1. *SELLER IS NOTIFIED PROMPTLY UPON DISCOVERY BY PURCHASER THAT STATED PRODUCTS ARE DEFECTIVE.*
2. *SUCH PRODUCTS ARE PROPERLY PACKAGED AND THEN RETURNED FREIGHT PREPAID, TO SELLER'S PLANT.*

THIS WARRANTY DOES NOT APPLY TO ANY PARTS DAMAGED DURING SHIPMENT AND/OR DUE TO IMPROPER HANDLING, OR DUE TO IMPROPER INSTALLATION OR USAGE, OR ALTERATION. IN NO EVENT SHALL THE SELLER BE LIABLE FOR ANY ANTICIPATED PROFITS, LOSS OF PROFITS, LOSS OF USE, ACCIDENTAL OR CONSEQUENTIAL DAMAGES OR ANY OTHER LOSSES INCURRED BY THE CUSTOMER IN CONNECTION WITH THE PURCHASE OF A STERN® PINBALL, INC. PRODUCT.

WARRANTY DISCLAIMER

EXCEPT AS SPECIFICALLY PROVIDED IN A WRITTEN CONTRACT BETWEEN SELLER AND PURCHASER, THERE ARE NO OTHER WARRANTIES, EXPRESS OR IMPLIED, INCLUDING ANY IMPLIED WARRANTIES OF MERCHANTABILITY OR FITNESS FOR A PARTICULAR PURPOSE.

CAUTIONS, WARNINGS & NOTICES

Caution

FOR SAFETY AND RELIABILITY, SUBSTITUTE PARTS AND EQUIPMENT MODIFICATIONS ARE NOT RECOMMENDED *(AND MAY VOID ANY WARRANTIES)*. USE OF NON-STERN® PINBALL INC. PARTS OR MODIFICATIONS OF GAME CIRCUITRY, MAY ADVERSELY AFFECT GAME PLAY, OR MAY CAUSE INJURIES. TRANSPORT PINBALL GAMES WITH HINGED BACKBOX IN THE DOWN POSITION ONLY! ALWAYS TAKE GREAT CARE WHEN SERVICING ANY GAME. ALWAYS READ THE SERVICE MANUAL BEFORE REPLACING OR SERVICING COMPONENTS. **SUBSTITUTIONS OF PARTS OR EQUIPMENT MODIFICATIONS** MAY VOID FCC TYPE ACCEPTANCE.

Always Disconnect The Line Voltage Before Servicing. Some Parts May Still Hold Current When Unplugged.

Warning

THIS EQUIPMENT GENERATES, USES, AND CAN RADIATE RADIO FREQUENCY ENERGY, AND IF NOT INSTALLED AND USED IN ACCORDANCE WITH THE INSTRUCTIONS MANUAL, MAY CAUSE INTERFERENCE TO RADIO COMMUNICATIONS. IT HAS BEEN TESTED AND FOUND TO COMPLY WITH THE LIMITS FOR A CLASS A COMPUTING DEVICE PURSUANT TO SUBPART J OF PART 15 OF FCC RULES, WHICH ARE DESIGNED TO PROVIDE REASONABLE PROTECTION AGAINST SUCH INTERFERENCE WHEN OPERATED IN A COMMERCIAL ENVIRONMENT. OPERATION OF THIS EQUIPMENT IN A RESIDENTIAL AREA IS LIKELY TO CAUSE INTERFERENCE IN WHICH CASE THE USER AT HIS OWN EXPENSE WILL BE REQUIRED TO TAKE WHATEVER MEASURES MAY BE REQUIRED TO CORRECT THE INTERFERENCE.

RF INTERFERENCE NOTICE, CABLE HARNESS PLACEMENTS AND GROUND STRAP ROUTING ON THIS GAME HAVE BEEN DESIGNED TO KEEP RF RADIATION AND CONDUCTION WITHIN LEVELS ACCEPTED BY THE FCC RULES. TO MAINTAIN THESE LEVELS, REPOSITION HARNESSES AND RECONNECT GROUND STRAPS TO THEIR ORIGINAL PLACEMENTS, IF THEY BECOME DISCONNECTED DURING MAINTENANCE.

Notices

THIS DOCUMENT AND THE DATA DISCLOSED HEREIN OR HEREWITH IS NOT TO BE REPRODUCED (EXCEPT WHERE NOTED), USED OR OTHERWISE DISCLOSED IN WHOLE OR IN PART TO ANYONE WITHOUT WRITTEN CONSENT OF STERN® PINBALL, INC. ***WARNING:*** PRODUCTS IN THIS MANUAL, THE COMPANY NAME AND DEVICES AND THE DESIGN OF THE MANUAL ITSELF, ARE PROTECTED BY FEDERAL PATENTS *(AND PATENTS PENDING)*, DESIGN REGISTRATIONS, TRADEMARKS AND COPYRIGHTS. ACTION WILL BE TAKEN IN THE EVENT OF INFRINGEMENT OR IMITATION. THE RIGHT IS RESERVED TO CHANGE SPECIFICATIONS WITHOUT PRIOR NOTICE.

© 2006 Manufactured by Stern® Pinball, Inc.
Icon Designs, ToPS™Logo, Bump N' Win™Logo & all related indicia are trademarks of Stern® Pinball, Inc. All Rights Reserved. Made in the USA.

"Multiball" is a registered trademark of Williams Electronics Games, Inc. Used by permission.

PCB Schematics (Section 5, Chapter 4) by CES (Creative Electronics & Software, Inc.) © 1995.

Family Guy™ & © 2006 Twentieth Century Fox Film Corporation. All Rights Reserved.

Copyright © 1998 BETA-BRITE and logo are trademarks of Adaptive Micro Systems, Inc. registered in the United States Patent and Trademark Office. All Rights Reserved.

SWITCH MATRIX GRID [#1 – #64] {Switch Locations on the next page}

CPU/ Sound Board	01 IC-U22A RETURN WHT-BRN J6-P9	02 IC-U22B RETURN WHT-RED J6-P8	03 IC-U22C RETURN WHT-ORG J6-P7	04 IC-U22D RETURN WHT-YEL J6-P6	05 IC-U16A RETURN WHT-GRN J6-P5	06 IC-U16B RETURN WHT-BLU J6-P3	07 IC-U16C RETURN WHT-VIO J6-P2	08 IC-U16D RETURN WHT-GRY J6-P1	09 IC-U36A RETURN TAN-BLK J12-P9	10 IC-U36B RETURN TAN-RED J12-P8	11 IC-U36C RETURN TAN-ORG J12-P7	12 IC-U36D RETURN TAN-YEL J12-P6	13 IC-U40A RETURN TAN-GRN J12-P4	14 IC-U40B RETURN TAN-BLU J12-P3	15 IC-U40C RETURN TAN-VIO J12-P2	16 IC-U40D RETURN TAN-WHT J12-P1
01 Q1 DRIVE ▶ GRN-BRN J1-P1	SW. # 1 BALL SAVER UP 180-5010-04 *below playfield*	SW. # 2 BALL SAVER DOWN 180-5010-04 *below playfield*	SW. # 3 LEFT ORBIT STAND-UP 515-5162-08 *below playfield*	SW. # 4 RIGHT 2-BANK BOTTOM 515-5162-08 *below playfield*	SW. # 5 RIGHT 2-BANK TOP 515-5162-08 *below playfield*	SW. # 6 LEFT NEWTON ROLLOVER 500-6227-01 *below playfield*	SW. # 7 RIGHT NEWTON ROLLOVER 500-6227-02 *below playfield*	SW. # 8 PIRATE [STAND-UP] TARGET 515-5967-04 *below playfield*	SW. # 9 1-BANK DROP TARGET 520-5252-01 *below playfield*	SW. # 10 MEG [STAND-UP] TARGET 515-5162-08 *below playfield*	SW. # 11 NOT USED	SW. # 12 NOT USED	SW. # 13 TV EJECT « D.O.T.S. » 180-5183-00 *a / b playfield*	SW. # 14 NOT USED	SW. # 15 TOURNA-MENT START CABINET 180-5119-03 *Front Molding*	SW. # 16 START BUTTON CABINET 180-5174-00 *In Cabinet*
02 Q2 DRIVE ▶ GRN-RED J1-P3	SW. # 17 NOT USED	SW. # 18 *(4-BALL)* TROUGH #4 (L) 180-5119-02 *below playfield*	SW. # 19 *(4-BALL)* TROUGH #3 180-5119-02 *below playfield*	SW. # 20 *(4-BALL)* TROUGH #2 180-5119-02 *below playfield*	SW. # 21 *(VUK OPTO)* TROUGH #1 (R) TRANS. / REC. TX 515-0173-00 RX 515-0174-00	SW. # 22 *(STACK OPTO) TROUGH JAM* TRANS. / REC. TX 515-0173-00 RX 515-0174-00	SW. # 23 SHOOTER LANE 180-5157-00 *below playfield*	SW. # 24 LEFT OUTLANE 500-6227-02 *below playfield*	SW. # 25 LEFT RETURN [LANE] 500-6227-02 *below playfield*	SW. # 26 LEFT SLING 180-5054-00 **2 per Asm.**	SW. # 27 RIGHT SLING 180-5054-00 **2 per Asm.**	SW. # 28 RIGHT RETURN [LANE] 500-6227-01 *below playfield*	SW. # 29 RIGHT OUTLANE 500-6227--01 *below playfield*	SW. # 30 TOP BUMPER 180-5015-04 *below playfield*	SW. # 31 RIGHT BUMPER 180-5015-04 *below playfield*	SW. # 32 BOTTOM BUMPER 180-5015-04 *below playfield*
03 Q3 DRIVE ▶ GRN-ORG J1-P4	SW. # 33 LEFT RAMP MADE 180-5087-00 *a / b playfield*	SW. # 34 NOT USED	SW. # 35 EVIL MONKEY 180-5119-02 *above playfield*	SW. # 36 NOT USED	SW. # 37 NOT USED	SW. # 38 NOT USED	SW. # 39 RIGHT ORBIT SPINNER 180-5010-04 *above playfield*	SW. # 40 DEATH RETURN [INNER LT.] 500-6227-02 *below playfield*	SW. # 41 3 BANK [STAND-UP] BOTTOM 515-5162-08 *below playfield*	SW. # 42 3 BANK [STAND-UP] MIDDLE 515-5162-08 *below playfield*	SW. # 43 3 BANK [STAND-UP] TOP 515-5162-08 *below playfield*	SW. # 44 (**F**) ART [4-BANK DROP TGT.] 520-5252-04 *below playfield*	SW. # 45 F (**A**) RT [4-BANK DROP TGT.] 520-5252-04 *below playfield*	SW. # 46 FA (**R**) T [4-BANK DROP TGT.] 520-5252-04 *below playfield*	SW. # 47 FAR (**T**) [4-BANK DROP TGT.] 520-5252-04 *below playfield*	SW. # 48 SNEAK RAMP 180-5183-00 *below playfield*
04 Q4 DRIVE ▶ GRN-YEL J1-P5	SW. # 49 BEER CAN (BRIAN) 180-5189-00 *a / b playfield*	SW. # 50 MINI MEG TARGET [STAND-UP] 511-5081-00 *below playfield*	SW. # 51 MINI PETER TARGET [STAND-UP] 511-5081-00 *below playfield*	SW. # 52 MINI RIGHT ORBIT 500-6775-00 *mini-playfield*	SW. # 53 MINI LEFT ORBIT 500-6775-00 *mini-playfield*	SW. # 54 MINI RAMP 500-6775-00 *mini-playfield*	SW. # 55 MINI TROUGH 500-6775-01 *mini-playfield*	SW. # 56 NOT USED	SW. # 57 RIGHT ORBIT 500-6227-02 *below playfield*	SW. # 58 NOT USED	SW. # 59 NOT USED	SW. # 60 NOT USED	SW. # 61 NOT USED	SW. # 62 NOT USED	SW. # 63 NOT USED	SW. # 64 CLAM EJECT « D.O.T.S. » 180-5209-00 *below playfield*

Wire Color Abbreviations used: BLK Black · BLU Blue · BRN Brown · GRY Gray · GRN Green · LGN Light Grn. · ORG Orange · PNK Pink · RED Red · TAN Tan · VIO Violet · WHT White · YEL Yellow

Dedicated Switches (D-1 – D-32) {Dedicated Switch Locations on the next page}

CPU/SND Board	IC-U2 PNK-BRN J2-P2	IC-U2 PNK-RED J2-P3	IC-U2 PNK-ORG J2-P4	IC-U2 PNK-YEL J2-P6	IC-U2 PNK-GRN J2-P7	IC-U2 PNK-BLU J2-P8	IC-U2 PNK-VIO J2-P9	IC-U2 PNK-GRY J2-P10	IC-U4 GRY-BRN J3-P1	IC-U4 GRY-RED J3-P2	IC-U4 GRY-ORG J3-P4	IC-U4 GRY-YEL J3-P5	IC-U4 GRY-GRN J3-P6	IC-U4 GRY-BLU J3-P7	IC-U4 GRY-VIO J3-P8	IC-U4 GRY-BLK J3-P9
GROUND (BLK) J2-P1/11 & J3-P10	SW. D-1 LEFT COIN SLOT 180-5204-00 *Coin Door*	SW. D-2 CENTER COIN SLOT/DBA 180-5204-00 *Coin Door*	SW. D-3 RIGHT COIN SLOT 180-5204-00 *Coin Door*	SW. D-4 4TH COIN SLOT 180-5204-00 *Coin Door*	SW. D-5 5TH COIN SLOT IF USED	SW. D-6 NOT USED	SW. D-7 NOT USED	SW. D-8 NOT USED	SW. D-9 LEFT FLIPPER BUTTON 180-5164-01 *Cabinet Side*	SW. D-10 LEFT FLIPPER E.O.S. 180-5149-00 *Flipper Asm.*	SW. D-11 RIGHT FLIPPER BUTTON 180-5160-01 *Cabinet Side*	SW. D-12 RIGHT FLIPPER E.O.S. 180-5149-00 *Flipper Asm.*	SW. D-13 UPR. LT. FLIPPER BUTTON 180-5164-01 *Cabinet Side*	SW. D-14 NOT USED	SW. D-15 UPR. RT. FLIPPER BUTTON NOT USED 180-5164-01 *Cabinet Side*	SW. D-16 NOT USED

CPU/SND Board	IC-41 LGN-BRN J13-P1	IC-41 LGN-RED J13-P3	IC-41 LGN-ORG J13-P4	IC-41 LGN-YEL J13-P5	IC-41 LGN-BLK J13-P6	IC-41 LGN-BLU J13-P7	IC-41 LGN-VIO J13-P8	IC-41 LGN-GRY J13-P9
GROUND (BLK) J13-P10	SW. D-17 TILT PENDULUM *(PLUMB BOB)* *See Sec. 4, Chp. 1, Pg. 63 for cab. parts*	SW. D-18 SLAM TILT OPTIONAL 502-5032-00 *Optional Kit*	SW. D-19 TICKET NOTCH IF USED 180-5119-02 *Below P/F*	SW. D-20 NOT USED	SW. D-21 BACK *(GREEN BUTTON)* 180-5192-04 *Coin Door*	SW. D-22 MINUS *(< / – RED BUTTON)* 180-5192-02 *Coin Door*	SW. D-23 PLUS *(+ / > RED BUTTON)* 180-5192-02 *Coin Door*	SW. D-24 SELECT *(BLACK BUTTON)* 180-5192-00 *Coin Door*

CPU/SOUND BD. SW1 DIP SWITCH ***(located between Connectors J3/J13)***

SW. D-25	SW. D-26	SW. D-27	SW. D-28	SW. D-29	SW. D-30	SW. D-31	SW. D-32
DIP SWITCH POSITION #1 ON / OFF	DIP SWITCH POSITION #2 ON / OFF	DIP SWITCH POSITION #3 ON / OFF	DIP SWITCH POSITION #4 ON / OFF	DIP SWITCH POSITION #5 ON / OFF	DIP SWITCH POSITION #6 ON / OFF	DIP SWITCH POSITION #7 ON / OFF	DIP SWITCH POSITION #8 ON / OFF

LAMP MATRIX GRID [#1 – #80] {Lamp Locations on the next page}

I / O Power Driver Board	01 IC-U17 18VDC YEL-BRN J13-P9	02 IC-U16 18VDC YEL-RED J13-P8	03 IC-U15 18VDC YEL-ORG J13-P7	04 IC-U14 18VDC YEL-BLK J13-P6	05 IC-U13 18VDC YEL-GRN J13-P5	06 IC-U12 18VDC YEL-BLU J13-P4	07 IC-U11 18VDC YEL-VIO J13-P3	08 IC-U10 18VDC YEL-GRY J13-P1
01 Q33 GROUND RED-BRN J12-P1	LP. # 1 START BUTTON 165-5002-00	LP. # 2 TOURNAMENT START BUTTON 165-5103-00	LP. # 3 FAMILY PETER 165-5002-00	LP. # 4 FAMILY LOIS	LP. # 5 FAMILY BRIAN	LP. # 6 FAMILY CHRIS	LP. # 7 FAMILY MEG	LP. # 8 FAMILY STEWIE
02 Q34 GROUND RED-BLK J12-P2	LP. # 9 (**P**) INBALL	LP. # 10 P (**I**) NBALL	LP. # 11 PI (**N**) BALL	LP. # 12 PIN (**B**) ALL	LP. # 13 PINB (**A**) LL	LP. # 14 PINBAL (**L**) L	LP. # 15 PINBAL (**L**)	LP. # 16 LEFT OUTLANE [NOT SPECIAL]
03 Q35 GROUND RED-ORG J12-P3	LP. # 17 LEFT RETURN [2X LOIS]	LP. # 18 RAISE DEATH [LEFT INNER]	LP. # 19 GOOD OLD BOYS	LP. # 20 SUPER GRIFFINS	LP. # 21 CHICKEN FIGHT	LP. # 22 SEXY PARTY	LP. # 23 IPECAC CONTEST	LP. # 24 (1) [BY RT. SLING]
04 Q36 GROUND RED-YEL J12-P4	LP. # 25 (2) [BY RT. SLING.]	LP. # 26 (3) [BY RT. SLING]	LP. # 27 RT RETURN [2X MEG]	LP. # 28 RT. OUTLANE [SPECIAL]	LP. # 29 TV [SCOOP]	LP. # 30 PINBALL [SCOOP]	LP. # 31 MULTIBALL [SCOOP]	LP. # 32 MEG JACKPOT
05 Q37 GROUND RED-GRN J12-P5	LP. # 33 PIRATE [STAND-UP]	LP. # 34 RT. NEWTON JACKPOT	LP. # 35 FAR (**T**) [4-BNK DRP/TRG]	LP. # 36 FA (**R**) T [4-BNK DRP/TRG]	LP. # 37 F (**A**) RT [4-BNK DRP/TRG]	LP. # 38 (**F**) ART [4-BNK DRP/TRG]	LP. # 39 LEFT ORBIT CHRIS	LP. # 40 LEFT ORBIT JACKPOT
06 Q38 GROUND RED-BLU J12-P6	LP. # 41 DEATH [1-BNK DRP/TRG]	LP. # 42 SKILL SHOT	LP. # 43 200K [TO LEFT RAMP]	LP. # 44 300K [TO LEFT RAMP]	LP. # 45 400K [TO LEFT RAMP]	LP. # 46 500K [TO LEFT RAMP]	LP. # 47 CRAZY CHRIS [TO LEFT RAMP]	LP. # 48 COLLECT BEERS [BEER CAN]
07 Q39 GROUND RED-VIO J12-P8	LP. # 49 GIGGITY GIGGITY [BEER CAN]	LP. # 50 HAPPY HOUR [BEER CAN]	LP. # 51 REMEMBER WHEN [BEER CAN]	LP. # 52 LARD MULTIBALL [BEER CAN]	LP. # 53 EXTRA BALL [LEFT NEWTON]	LP. # 54 LEFT NEWTON JACKPOT	LP. # 55 EVIL MONKEY JACKPOT	LP. # 56 3-BANK TOP ['X' STAND-UP]
08 Q40 GROUND RED-GRY J12-P9	LP. # 57 3-BANK MID ['X' STAND-UP]	LP. # 58 3-BANK BOT ['X' STAND-UP]	LP. # 59 NOT USED	LP. # 60 NOT USED	LED WB WHT LP. # 61 BOTTOM BUMPER « D.O.T.S. » 112-5024-08	LP. # 62 DRUNKEN CLAM [MYSTERY]	LP. # 63 STEWIE [STAND-UP X2]	LP. # 64 SHOOT AGAIN
09 Q41 GROUND RED-WHT J12-P10	LP. # 65 RIGHT ORBIT LOIS	LP. # 66 RIGHT ORBIT JACKPOT	LP. # 67 SPINNER [LOIS]	LP. # 68 MINI SHOOT AGAIN	LP. # 69 BALL SAVER POST	LP. # 70 STEWIE SPOT LIGHT « D.O.T.S. »	LP. # 71 NOT USED	LP. # 72 NOT USED
10 Q42 GROUND RED J12-P11	LP. # 73 NOT USED	LP. # 74 NOT USED	LP. # 75 NOT USED	LP. # 76 NOT USED	LP. # 77 NOT USED	LP. # 78 NOT USED	LP. # 79 NOT USED	LP. # 80 NOT USED

FULL SIZE MATRIXES: FIND-IT-IN-FRONT (DR. 4 & DR. 6)

▼ U.S. ▼
Customary
Inch Ruler

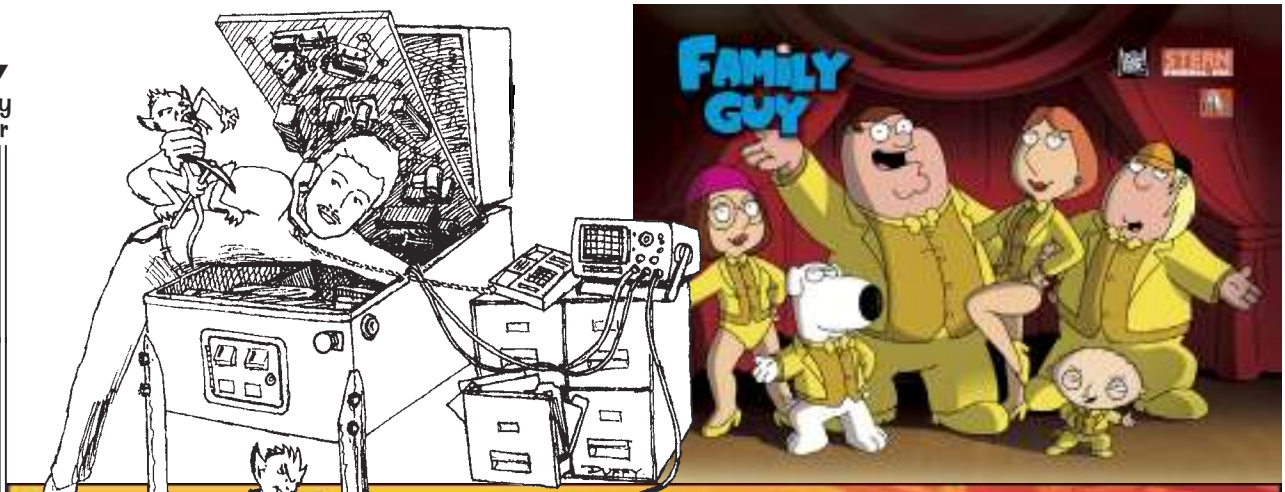

Technical Support & Parts Sales

2002, 2003 (2-Disc Set) 2004 (2-Disc Set) & 2005 (2-Disc Set) CD-GAMEs are now available!
Click year for more info!

We at STERN Pinball continuously strive to provide our distributors, operators, and game owners with the best technical support possible. We, therefore, have provided you with the service options listed below. If your game requires parts and/or service, please contact your nearest STERN Pinball distributor (See our Distribution List). For any additional assistance, contact our technical service staff at 800-KICKERS (**800-542-5377**) or by e-mail at parts.service@sternpinball.com.

If your STERN Pinball is in need of repair, please contact your nearest STERN Distributor.

Pinball Game Parts
• Offering Service Game Manual excerpts: Parts Identification & Location (The Pink Pages), Drawings for Major Assemblies & Ramps (The Blue Pages) and Appendixes A-J *(updated with each game)*

Service Bulletins
• Detailing Technical Information, Tips, FYIs, Notices and Updates

GAME Code Library
• Offering game code for all Data East®, Sega™ and STERN® Pinballs *(EPROM Programmer required)*

Schematics, Theory of Operation and Troubleshooting Tips
• Drawings on the White Star Board System™

Coinage Cards
• *Offering a range of Coinage Cards for download*
• Country Setting, Pricing Scheme, Dip Switch Setting *(opens a pop-up window)*
• Custom Pricing Demonstration *(for S.A.M. System)*

Tricks & Tips
• *Pinball Machine Foam Cushion Packing*
• *1st Time Pinball Set-Up & Preventative Maintenance*
• *Pinball Location Maintenance*
• *How to Update Your Game Code (S.A.M. System)*

Track Your Order Via UPS

NTE Semi-Conductor Cross Reference

Radio Shack Component Catalogue

STERN PINBALL, INC. PARTS SALES & TECHNICAL SUPPORT

Metric Conversion

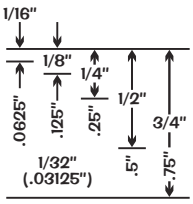

1" = 2.54 cm *or* 25.4 mm
1 cm = .3937"
1 mm = .03937"

For metric, multiply the inch value by the metric value:
example: **5" X 2.54 cm = 12.7 cm or 127 mm**

For US, multiply the metric value by the inch value:
example: **13 cm X .3937" = 5.1181"**

1-800-5KICKERS7

Visit our website **www.sternpinball.com** for Pinball & Redemption game information!

Click Tech Support & Parts Sales *to view, print or download all of the above!*

HELP US, HELP YOU! *If you have any suggestions, questions, need technical advice, find errors or have comments, contact us through our website or call!*

This Game Service Manual and all other documents relating to this product, playfield components, features, rules, programming and operation are subject to change without notice (Service Bulletins, if applicable, available through our website).

CE Games shipped factory direct to Europe from Stern Pinball, Inc. are CE approved and will have an "E" prefix attached to the Serial Number.

7 8 0 - 5 0 9 3 - 0 1

After Set-Up

If you saved your foam cushion packing materials and box, download the PINBALL MACHINE FOAM CUSHION PACKING 11" X 17" Color Sheet on-line on our website:
http://www.sternpinball.com/tips.shtml

Machine Set-Up Procedures

...after reading the included Pinball Game Set-Up Instruction Sheet (SPI 755-5310-08) continue reading important info below:

(a) "The appliance has to be placed in a horizontal position." **(b)** "This appliance is not to be cleaned by a *Water Jet*."

603335-7.12.1 (i) "Do not locate this appliance in an area where a *Water Jet* is used." **(ii)** "Do not clean this appliance with a *Water Jet*."
60335-7.12.5 (b) If the supply cord is damaged, it must be replaced by the manufacturer, its service agent or similarly qualified persons in order to avoid a hazard.

Backbox (backglass removed):

1. Check all connectors for loose wire terminations. Reseat any loose wire by pushing in on the terminal. **Push on all** plugged in connectors for the CPU/Sound, I/O Power Driver and the Display Power Supply Boards *(check that they are properly seated).* Ensure the Fluo- rescent Light Tube is seated correctly. Check that all fuses are seated properly *(fuses on the I/O PCB have Red LED Status indicators). Reinstall backglass, lock the Backbox and secure its' keys inside the Coin Door.*

Playfield (glass removed):

2. Remove all shipping tie downs, shipping blocks, packing foam, etc., if present. ***READ ALL PRINTED INFORMATION!*** Shipping Instructions and/or Decals describe warnings, cautions, and/or important information specific to the game.
SAVE ALL IN CABINET!
If pinballs were already installed into the Ball Trough *(under the arch)*, remove them before performing the following step. ****Pinballs can fall out and away from the playfield*** ***

3. Raise the playfield and rest it against the Backbox. See the illustration **"Easy Access Service System - 2 Positions"** *on Page 4.*

4. Visually inspect all cabinet cables and connector terminations; ensure no wires or cables are pinched and that cable harnesses are not pulled tight.

5. Make sure the proper amount of pinballs are installed *(decal on the lock down assembly and the inside manual cover describe how many pinballs are needed).*

6. Lower the playfield and ensure game is **level side-to-side** by adjusting Leg Levelers, if required. See the illustration **"Leg Leveler Adjustment"** *on Page 4.* Start with the Leg Levelers turned all the way in *(1.25" from floor to bottom of leg),* depending on the condition of the floor, adjust the Leg Levelers as required until the **game pitch is 6.5°**, determined by the Bubble Level.

USE THE BUBBLE LEVEL ON THE WOOD RAIL (LOWER RIGHT) TO DETERMINE IF LEVEL IS ACHIEVED. BUBBLE SHOULD APPEAR BETWEEN THE 2 BLACK LINES. SEE PAGE 4 FOR AN ILLUSTRATION.

The playfield incline affects difficulty of play. Use the recommended incline;
Game difficulty is best varied using game adjustments.

With the Coin Door Open:

7. If desired, perform any self tests at this time *(see Section **3**, Chapter **1**, **Service Menu Introduction**, and Chapter **2**, **GO TO DIAGNOSTICS MENU**, for information on how to enter "**Begin Play Test**" and "**Game Name Test**" Menus, if any, to test components on the game).*

8. If desired, adjust **Game Pricing, Standard and/or Custom** *(see Section **3**, Chapter **4**, **GO TO ADJUSTMENTS MENU** and Section **3**, Chapter **5**, **GO TO INSTALLS MENU** to adjust **Game Difficulty**, **3-** or **5-Ball Play, Competition** or **Home Settings**, **Novelty**, **Add-A-Ball**, etc.).*

PINBALL GAME SET-UP

CAUTION: At least two (2) people are required to move and maneuver game. Use proper moving equipment & extreme care while handling. Pinball game is heavy! 280lbs (+/- 5) Boxed. Refer to Service Game Manual for further **After Set-Up Procedures** *(Section 1, Chapter 1)* and other important information!

TOOLS REQUIRED:
5/8" Socket Wrench, Utility Knife & Snips

1. Before unpacking box, note the side which says **"TRUCK THIS SIDE ONLY"** *(this is the side the box will be cut).* ***Note:*** *If you want to "save" the box, lay box flat on this side, pull game out and tilt back into the upright position as shown. Use of a blanket is then required to protect floor.*
2. With top of the box open, remove the four (4) foam pieces and the two (2) narrow box tubes which contain the **four (4) Identical Legs with Levelers** ***(2 per tube)***.

3. At this point **DO NOT CUT STRAPPING** *(You want to keep the Backbox secured in the down position).*
4. With the utility knife, **CAREFULLY!** *cut down on the left and right sides as shown. Let it fall forward and remove the entire side by carefully cutting the bottom.*

Please *be aware of the floor or carpet under the box while you are cutting so no damage occurs!*

5. With the 5/8" Socket Wrench, loosen and remove the 2 Leg Bolts on each side of the front cabinet.
6. Install **FRONT LEGS** using the bolts removed from ***Step 5***. *Secure tightly.* ***Take care not to scratch the Finish on any of the Legs.***

7. Carefully set the game down on the **FRONT LEGS**. *Care should be taken...**Game is heavy, two (2) people are recommended for this and the following step.*** ***SET ASIDE THE OPEN BOX.***
8. With the 5/8" Socket Wrench, loosen and remove the 2 Leg Bolts on each side of the rear cabinet.
9. Using supports or two (2) people, prop the rear of the cabinet up. *(Not shown in pictures is second person handing legs and bolts to the installer.)*
10. Install **REAR LEGS** using the bolts removed from ***Step 8***. *Secure tightly.* ***Take care not to scratch the Finish on Legs.***

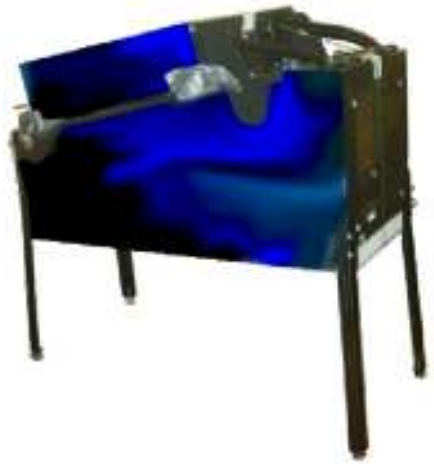

11

11. Cut **NYLON STRAPPING**. ***CAUTION:*** *Strapping will* ***SNAP****,* ***protect your eyes! Use extreme care*** *when using a utility knife, snips. Remove all* ***V*** *boards.*

12

12. After the **BACKBOX** is in the **UPRIGHT POSITION**, locate the **5/16" HEX KEY**. While inserted, rotate **KEY** with a **3/4** turn until latched & locked.

NOTE: ***COIN DOOR KEYS*** *are tied to the* ***Shooter Rod***** (if equipped) or taped to the* ***Playfield Glass*** *(if equipped with Auto Plunger Button). Remove keys.* ***BACKBOX KEY*** *are located inside Coin Door.* ***Backbox Lock*** *(remove* ***Backglass*** *to access the CPU/Sound and I/O PCBs).*

ALWAYS STORE THE GAME SERVICE MANUAL & INFORMATION SHEETS INSIDE THE CABINET WHEN NOT USING.

13. With the keys removed, open the **COIN DOOR**. Pull the **YELLOW HANDLE** to the **LEFT** and at the same time pull up on the **FRONT TOP MOLDING**, remove and set aside.

13

4-BUTTON SERVICE SWITCH SET : Credits, Volume & Service Menu
See Section 3, Chapter 1

13

The **PLAYFIELD GLASS** can now be pulled out forwards and removed. ***TAKE CARE*** *while moving; set glass on a safe surface (carpeting recommended).*

14

14. Through the open **Coin Door**, remove the **RETAINING CLIP** at the rear of the **CASH BOX** and open. Remove the **PINBALLS** & the **PLUMB BOB** *from the* **SPARE PARTS BAG** *(save the other spare parts in cabinet).* Install the **PINBALLS** by placing them on the playfield so they can roll down between the lower flippers into the **Ball Trough** *(the amount of pinballs to install noted under* ***FRONT TOP MOLDING*** *or 1st page of manual).* ***Remove any shipping materials which may be present. Check for parts which may have come loose during transportation and secure.***

15

15. Install the **PLUMB BOB** *(located in parts bag in cash box)* onto the **Hanger Wire** & tighten the **Thumb Screw**. Loosening the **Thumb Screw** & lowering *or* raising the **PLUMB BOB** makes the ***Games Tilt Function*** more or less sensitive *(tilt warnings adjustable through* ***DIAGNOSTICS****,* ***GO TO ADJUSTMENTS MENU****).*

Remove the **GAME SERVICE MANUAL** *(stored inside of the left wall of the cabinet). Review Section 1, Chapter 1, Page 1, and perform* ***Steps 1 – 8+****. Review the end of this chapter on how to lift the playfield to access the Plumb Bob Tilt.* ***READ! YOUR SERVICE GAME MANUAL*** *and review the* ***SERVICE MENU*** *(Diagnostics, Adjustments, Installs), Parts & Schematics.*

GAME SERVICE MANUALS ON-LINE: *http://www.sternpinball.com/techsupport.shtml*

STERN PINBALL, INC.
Stern® Pinball, Inc. © 2008
SPI Part № 755-5310-08

How to Secure the Backbox for Transporting

*For more Backbox details & part numbers, see Section **4**, Chapter **1**, **Parts Id. & Location**, **Backbox Assembly**.*

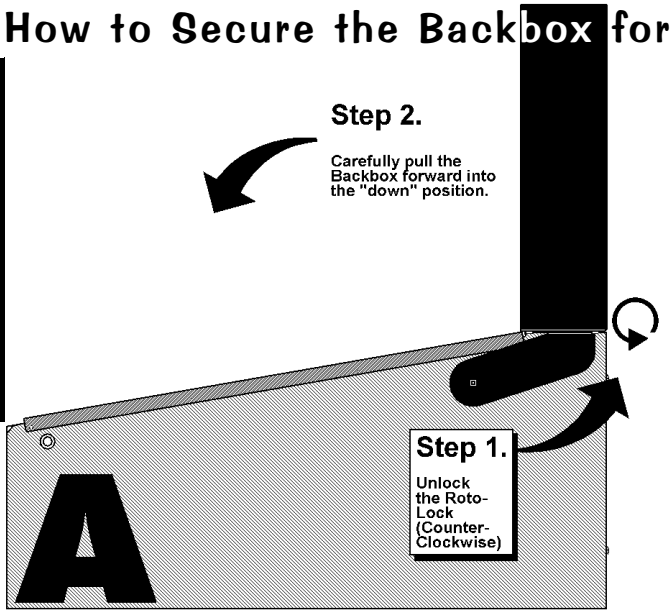

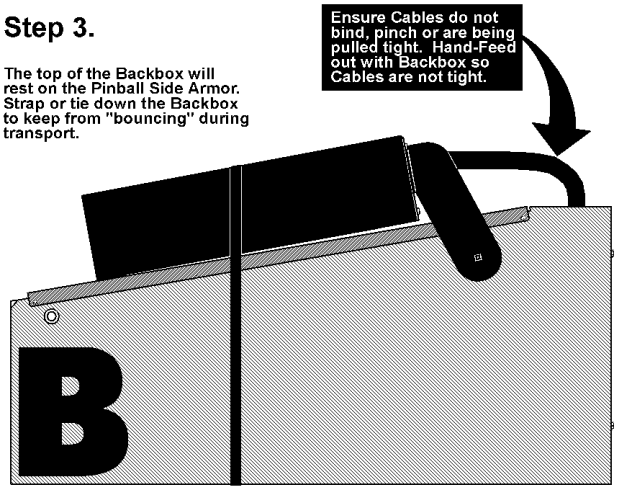

Leg Leveler Adjustment

Attach the four (4) Leg Assemblies to cabinet corners with the eight (8) leg bolts provided .

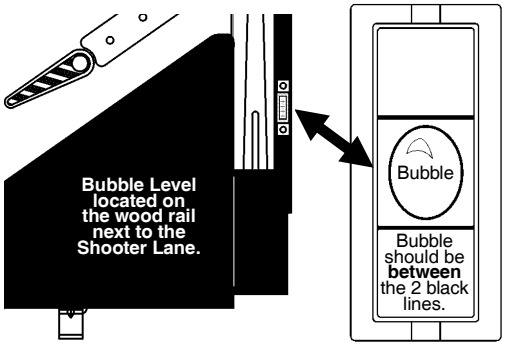

Start adjustment with the leg levelers *turned all the way in*.

View the *bubble* in the level provided on the right side wood rail.

Adjust the front or rear levelers as necessary to cause the bubble to float between the two (2) black lines.

Use a pinball to roll down the center of the playfield for side-to-side leveling.

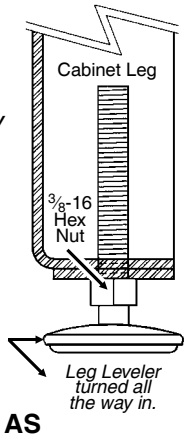

YOUR PLAYFIELD PITCH IS NOW AT 6.5° AS REQUIRED FOR PROPER GAME PLAY!

Note: *For custom adjustment greater than >6.5° can be achieved by turning out the rear leg leveler(s), however,* ***it is not recommended.***

Easy Access Service System - 2 Positions

With the front molding & glass removed, carefully lift the playfield *(take care when using the Bottom Arch to hoist).*

Position 1
When lifted high enough, the ***Playfield Support Slide Brackets*** (**Fig. 1A**) can be seen and can clear the cabinet front (**Fig. 1B**). At this time, pull the playfield toward the front of the cabinet, checking that the mechanical components clear the cabinet front, then rest the playfield on the ***Playfield Support Slide Brackets*** at the front channel of cabinet (**Fig. 1C**);

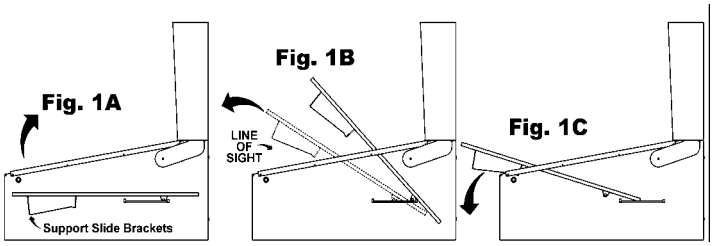

Position 2
With the playfield at rest, hold the sides & pull toward the front of the cabinet *(approx. 6" to 8")*, until resistance is felt from ***Edge Slide Brackets*** stopping against the ***Slide & Pivot Support Brackets*** located on either side of the cabinet (**Fig. 2A**). At this time, swivel the playfield toward the Backbox, then rest on the top edge (**Fig. 2B & 2C**).

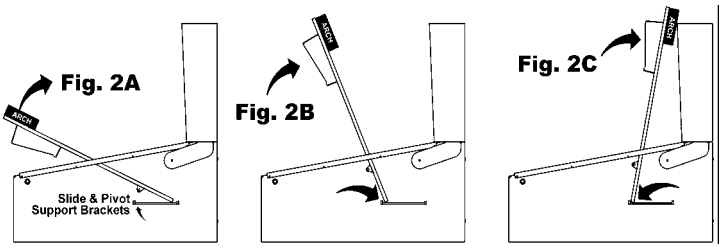

Game Operation & Features

Start of Game Features

Starting a Normal Game

Insert coin(s). The game generates a sound for the first coin & for each subsequent coin with the display indicating the number of credits posted. Press the **Start Button** and a start-up sound is produced, and the posted credits are reduced by one. Subsequent players can be added (**up to 4 can play!**) by pressing the **Start Button** before the end of ball 1 *(with sufficient credit in the game).*

The display now indicates the player or # of players selected from the total depressions of the **Start Button**. The display indicates the ball in play, and a ball is served to the *Shooter Lane*. Pressing the **Start Button** after ball 1 of any player will start a new game *(if credits are available),* ***but only*** if the **Start Button** is depressed for 2-3 seconds. This delay is to avoid accidental "re-starts" of a game. ***Note:*** *Any partial credit remaining during game play after the end of the first ball, or power down, will be eliminated.*

Starting Team Play (Doubles!)

This option is adjustable with **Standard Adjustment (Adj.) 58, Team Scores** (Default = **NO**). If **Standard Adj. 58, Team Scores** is changed to **YES**, then Team Play will be made available. ***Team Play only works in a 4-Player Game.*** The totals for Players 1/ 3 (Team 1) & Players 2 / 4 (Team 2) are then displayed individually ***as well as*** the combined score for **BOTH TEAMS**.

Starting Tournament Play

This Pinball Game is **Tournament Ready**. ***Optional Tournament betaBRITE Color Dot Display & hardware (sold separately) is available.*** *Review Section **3**, Chapter **6**, **GO TO TOURNAMENT MENU**, for more info!*

Unlike a *"Normal Game"*, the Tournament Game is started by depressing the **Tournament Start Button** *(located on the Front Molding, if installed).* If adequate credit(s) are posted **and** a ***Tournament is started (set-up properly)*** via the **Service Menu** *(select the "TOUR" Icon in the Main Menu)*, the **Tournament Start Button** will flash. *Any adjustments or installs changed will not be in affect. Starting a Tournament Game defaults to preprogrammed Tournament Rules (e.g. No Extra Balls, Specials or Bonus Credits are awarded); however, starting a Normal Game after a Tournament Game will then revert back to any unique adjustments or installs performed previously.* **During** and **End of Game Features** operate in the same manner.

During Game Features

Video Mode

Our games may feature video interactive play modes. *Also, don't forget to watch the display for hints or instructions.* The interactive video modes require the player to play on-screen using the flipper buttons. When in video mode, the ball-in-play is "held" *(usually in a Scoop, Eject Saucer or lock of some sort).*

During Game Features Continued

Feature Mode & Combination Shots

Features are lit on the playfield and started by completing *certain shots (e.g. completion of Target Banks, Orbit(s), Ramp(s) and/or any combination of the shots).*

Multiball

Multiball is started after completion of certain features *(amount of balls used depends on game rules).*

Replay Feature

Replay awards are given as the player exceeds a High Score Level during game play. This can be adjusted with **Standard Adj. 3, Replay Award** (Default = **CREDIT**). Players exceeding the High Score Levels can receive: **CREDIT**, **EXTRA BALL**, or **SPECIAL**. Adjust to **NONE** if a replay award is not desired.

End of Game Features

Game Endings

When all player(s) have played all balls (including any Extra Balls), the game ends. If power is interrupted during the course of a game, it will end that game (***see Starting a Normal Game***). Closure of the Plumb Bob Tilt Switch according to the number of tilts set, **Standard Adj. 22, Tilt Warnings** (Default = **2**) or prolonged closure, will end the current Ball-In-Play. Closure of the Slam Tilt Switch on the Coin Door ends the current game(s).

Match Feature

At the end of each ball, earned bonuses are collected. At the end of the last ball of a game (including any extra balls, if applicable), earned bonuses are collected, then the system produces a random 2-digit number (a multiple of 10; 00 to 90). Matching the last 2 digits of the player's score with this number awards a credit. In **Std. Adj. 19, Match Percentage** (Default = **9%**) can be changed from 0-10%. Changing the percentage to **0% displays** the *"Match Animation"* at the end of the game, however, will never match nor award anything. Changing this adjustment to **OFF** will **not display** the *"Match Animation"* nor award anything.

Entering Initials/Name

If player achieved a new *High Score* in a game or achieved a *Special Feature (if given)* the player may enter 3 Initials. In **Std. Adj. 36, HSTD (High Score To Date) Initials** (Default = **3 Initials**) can also be changed to **10-Letter Name**. Use the **Flipper Buttons** to choose a letter or character as seen on the Dot Display. Hitting the **Start Button** locks in the letter or character and proceeds to the next letter. The game then proceeds into the ***Game-Over Mode*** and then to the ***Attract Mode***.

Note: **Standard Adj. 41, *Custom Message*** *(Default = **ON**) can be displayed during the Attract Mode; enter letters in the same fashion. For more details on Adjustments, see Section **3**, Chapter **4**.*

... continued on the next page.

Auto Percentaging

This game is equipped with Auto Percentaging, **Standard Adjustment (Adj.) 1, Replay Type** (Default = **AUTO**, *adjustable*). The *Replay Percent* is automatically adjusted, **Standard Adj. 2, Replay Percentage**, or you can set a *Fixed Replay Score*. Four levels may be selected. Adjustments allow awarding of a "CREDIT" (or your setting) as each level is exceeded. This can be adjusted with, **Standard Adj. 3, Replay Award** (Default = **CREDIT**). With the ***Autopercentage Feature***, if the actual replay percentage is higher or lower than that desired, the game will automatically adjust for the new recommended percentage score(s). You may choose to make a different "score-to-beat" adjustment; this is done by utilizing **Standard Adj. 4, Replay Levels**. *For more details with **Adjustments**, see Section **3**, Chapter **4**, **GO TO ADJUSTMENTS MENU**; also, see see Section **3**, Chapter **5**, **GO TO INSTALLS MENU** (via the **UTILITIES MENU**) for further customization of your Pinball Game.*

Print on Astrobrights® Solar Yellow #65
Wausau Paper Products (Stock #22731).

Sec. 2: Game Op.

Instruction Card

Below is a **COPY** of the Game Instruction Card (SPI Number: **755-5193-12-Y English Front / Spanish Back**). *For a replacement Game Instruction Card simply* **COPY** this page and *cut out* the card as a *temporary replacement* until a *new card is ordered through your distributor; or download from our website,* ***www.sternpinball.com****, and click on the pinball game desired or click the the Game Archive link. Multiple language Instruction Cards are included with the PDF.*

COPY & CUT

FOLD HERE

Click on card to open the Instruction Card for printing.

FAMILY GUY

To Play Stewie's Mini-Pinball, spell **P-I-N-B-A-L-L** by hitting the **Captive Balls**. After spelling **P-I-N-B-A-L-L**, shoot the **TV Scoop** to start "Stewie Pinball" on the mini-playfield.

Stewie Pinball The name of each family member is spelled out in lights on the mini-playfield. Each *mini-playfield shot* adds a 'letter' to a character's name. Spell out each character's name to light their face on the playfield. Get all the character faces to start *Stewie Multiball*.

Fart Multiball Hit the **F-A-R-T 4-Bank Drop Targets** to advance to *Fart Multiball*.

Evil Monkey Shoot the **Chris Target** *(upper left)* to lower the **Evil Monkey Target** and advance the *Evil Monkey Award*. Collect **all 5** *Evil Monkey Awards* to start *Crazy Chris*.

Death 1-Bank Drop Target Hit the **Death 1-Bank Drop Target** to raise the **Ball Saver Post** and *cheat Death!*

Extra Ball Shoot the **Left Ramp** multiple times to light the *Extra Ball Shot*.

Hint: *Shoot the Spinner Target (right orbit) to light TV.*

Family Guy™ ©2006-2007. Twentieth Century Fox Film Corporation. All Rights Reserved.

755-5193-12-Y English

Table of Contents
for Section 3

SERVICE MENU
PRESS 'SELECT' TO CONTINUE

Chapter 1, Service Menu Introduction ..... 8 – 12
- ▶ Table of Contents for Section 3 7
- ▶ Service Swtich X4 Set Acces & Use 8
  - ▷ Function 1: SERVICE CREDITS MENU ▷ Function 2: VOLUME MENU ▷ Function 3: SERVICE MENU
- ▶ Service Menu Introduction 9
  - ▷ How to Use This Section
- ▶ Family Guy™ Pinball Service Menu Icon Tree 10-11
- ▶ Exit Service Menu 12
  - ▷ Problem / Solution Table

Chapter 2, GO TO DIAGNOSTICS MENU ..... 13 – 20
- ▶ Go To Switch Menu 14
  - ▷ Switch Test ▷ Active Switch Test ▷ Switch Alerts
- ▶ Go To Coil Menu 15
  - ▷ Single Coil Test ▷ Cycling Coil Test
- ▶ Go To Flash Lamps Menu 15
  - ▷ Single Flash Lamp Test ▷ Cycling Flash Lamp Test
- ▶ Go To Lamp Menu 16
  - ▷ Single Lamp Test ▷ All Lamps Test ▷ Row Lamps Test ▷ Column Lamps Test ▷ Ordered Lamps Test
- ▶ Stewie Motor (Family Guy) Test 17
- ▶ Ball Trough Test 17
- ▶ Technician Alerts 18
- ▶ Knocker Test ▶ Sound / Speaker Test ▶ Begin Burn-In 19
- ▶ Dot Matrix Test 20

Chapter 3, GO TO AUDITS MENU ..... 21 – 24
- ▶ Earnings Audits [#1 – #13 Definitions] 21
- ▶ Standard Audits [#1 – #59 Definitions] 22-23
- ▶ Feature Audits [#1 – #70] 24
- ▶ Tournament Audits [#1 – #14] subject to change 24
- ▶ Dump Audits to USB 24

Chapter 4, GO TO ADJUSTMENTS MENU ..... 25 – 34
- ▶ Standard Adjustments [#1 – #63] 25-32
- ▶ Feature Adjustments [#1 – #26] 33-34

Chapter 5, GO TO UTILITIES MENU ..... 35 – 40
- ▶ Go To Installs Menu 35-38
  - ▷ Install Extra Easy ▷ Install Easy ▷ Install Medium ▷ Install Hard ▷ Install Extra Hard ▷ Install 3-Ball ▷ Install 5-Ball
  - ▷ Install Competition ▷ Install Directors Cut ▷ Install Home Play ▷ Install Novelty ▷ Install Add-A-Ball ▷ Install Factory
- ▶ Enter Custom Message 39
- ▶ Set Custom Pricing 39
- ▶ Set Date / Time 40
- ▶ Go To Resets Menu 40
  - ▷ Reset Coin Audits ▷ Reset Game Audits ▷ Reset Grand Champion (Score) ▷ Reset High Scores ▷ Reset Credits
  - ▷ Reset Factory Settings
- ▶ Go To USB Menu 40
  - ▷ Dump to USB Memory Stick ▷ Update Game Code ▷ Backup to USB Memory Stick

Chapter 6, GO TO TOURNAMENT MENU ..... 41 – 42
- ▶ Start Tournament / Stop Tournament 41-42
- ▶ View Tournament Data 42
- ▶ Tournament Audits [#1 – #14] 42
- ▶ Sign Messages A-B 42

Service Switch X4 Set Access & Use

The **4-Button Service Switch Set** provides access for ***three (3) functions*** available for your use: **1: SERVICE CREDIT**, **2: VOLUME [–] / [+]** and **3: SERVICE MENU**.

▼ Service Switch X4 Set ▼

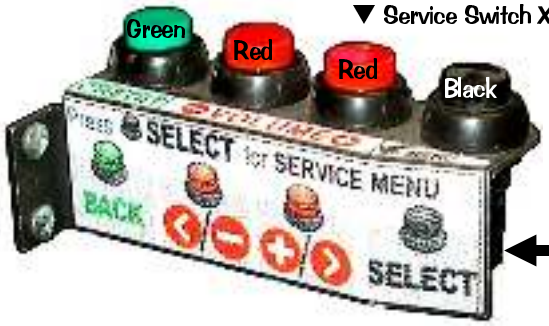

Inside Coin Door

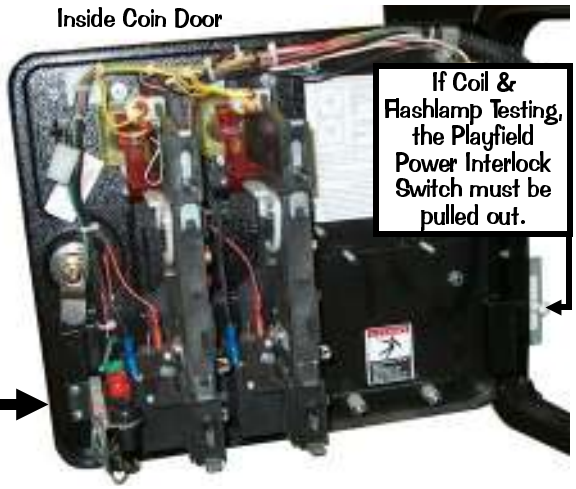

To access any of these ***three (3) functions*** you must first open the **Coin Door** *(see pictorial above)* with the Game in the ***Attract Mode*** *(not already in any Function or Menu stated below) and then follow below.*

*Pushing the **GREEN BUTTON** first.*

◀ Function 1: SERVICE CREDITS MENU

Pushing the **Green [SERVICE CREDIT] Button** first, adds a ***Service Credit*** per push *(will not affect your audits as "paid" credits).* This is useful for the technician to test games in regular play without affecting the game audits. Each depression adds **1 credit**; up to **50 credits** can be applied. **Standard Adjustment 23**, **Credit Limit**, determines this, however, it can be changed from 04-50; *for details see Chapter **4** of this Section **3**.*

Note: *Once your credits are added, this menu will **automatically exit** a few seconds after the last button depression or when the **Green [BACK]** or **Black [SELECT] Button** is pushed. This function is disabled if **Standard Adjustment 38**, **Free Play**, is set to **YES**. The Service Credits are limited to the Credit Limit in addition to any paid credits present in the game (e.g. If the Credit Limit is 30, with 8 paid credits present, only 22 Credits can be applied.).*

*Pushing either **RED BUTTON** first.*

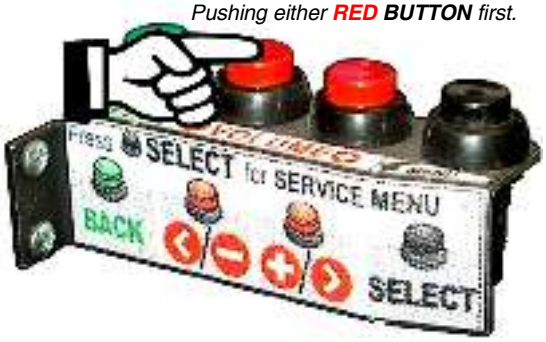

*Pushing either **RED BUTTON** first.*

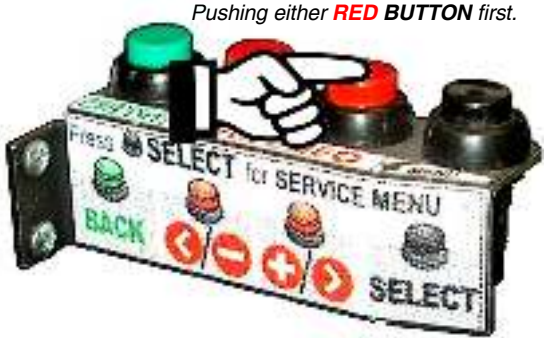

▲ Function 2: VOLUME MENU ▲

Pushing either of the **Red [VOLUME] Buttons** first, enters the ***VOLUME MENU***. While in this Mode, to **DECREASE** the volume, hold down or depress the **1st Red [< / –] Button** until desired the volume is achieved; to **INCREASE** the volume, hold down or depress the **2nd Red [+ / >] Button** until the desired volume is achieved.

Note: *The volume can be set between **0-63**; Once your adjustments are made, this menu will **automatically exit** a few seconds after the last button depression or when the **Green [BACK]** or **Black [SELECT] Button** is pushed.*

*Pushing the **BLACK BUTTON** first.*

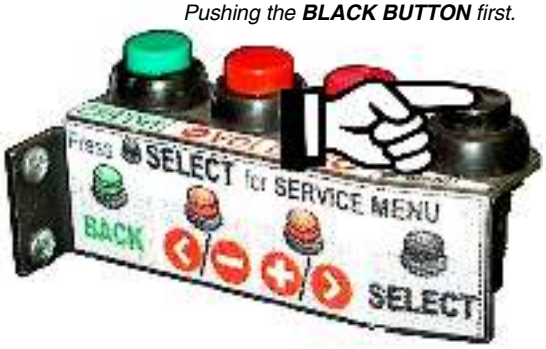

◀ Function 3: SERVICE MENU

Pushing the **Black [SELECT] Button** first, enters the ***SERVICE MENU***. Once in, navigate through all menus by depressing the **Service Menu Buttons**. Use the **Red [< / –]** *or* **[+ / >] Buttons** to move LEFT / RIGHT, NEXT/PREVIOUS *(audits/adjustments) or* to INCREASE / DESCREASE an adjustment (setting). Use the **Black [SELECT] Button** to select a highlighted *Icon*, move to the next line of text *or* to answer "**OK**" where applicable. Use the **Green [BACK] Button** to exit *or* escape back.

Please read *Section **3**, Chapters **2-6**, for explanation on all **Icons** and **Menus**. **Read! Read! Read!***

Service Menu Introduction

Important: *The **Switch Bracket** holds the **Playfield Power Interlock**. It is located just inside the Coin Door frame (see pictorial of the **Coin Door** on the previous page). The Button Switch for the **Playfield Power Interlock Switch** must be pulled out for electro-mechanical device testing or diagnostic purposes (this is required). If this button is pushed in, the **Playfield Power** is disabled while the **Coin Door** is **OPEN**.*

How to Use This Section

This section will cover all functions available in the **SERVICE MENU** in a *Step-By-Step* process. This section is divided into **chapters** which coincide with the **MAIN MENU** *(will also provide more detailed information).* The previous and following pages in this Chapter will instruct the operator on how to move through the Menus. *It's simple, easy and fun to use!*

To get into the **SERVICE MENU MODE** review **"Function 3: SERVICE MENU"** on the previous page. After Power-Up, push down the **Black [SELECT] Button** to begin. Looking at the display you will momentarily see "**SERVICE MENU**" followed by the **MAIN MENU**:

Use the **Red [< / –] / [+ / >] Buttons** to move the selected ***Icon*** left or right, and the **Black [SELECT] Button** to activate the selected ***Icon***.

The **MAIN MENU** now appears with the "DIAG" *Icon* (**GO TO DIAGNOSTICS MENU**) highlighted:

As the operator views the Menu Screen(s), the symbols indicates that there are more *Icons* to select in each direction. The *Icon* selected will blink. Pushing the **Black [SELECT] Button** will select the *Icon* and the Menu Screen will change to the menu selected. Select the **Green [BACK] Button** to move backwards through the menu levels. Press the **Green [BACK] Button** repeatedly or select the **"QUIT"** *Icon* to completely exit the **SERVICE MENU** Mode.

View the **SERVICE MENU Icon Tree** on the next pages for a complete overview of all menus used in this system. The "HELP" *Icon* provides an explanation of **ICON** usage or any other information in the Menu where the "HELP" *Icon* was selected *(when available).*

DIAG: GO TO DIAGNOSTICS MENU | **AUD:** GO TO AUDITS MENU | **ADJ:** GO TO ADJUSTMENTS MENU
UTIL: GO TO UTILITIES MENU (INSTALLS, CUSTOM MSG., CUSTOM PRICING, SET TIME, RESET & USB)
TOUR: GO TO TOURNAMENT MENU (START TOURNAMENT, VIEW TOURNAMENT DATA, SIGN MESSAGES)

>> TO UPDATE THE GAME CODE, REVIEW THE STEPS ON THE INSIDE FRONT COVER OF THIS MANUAL.

Use both the manual and the display to help customize, troubleshoot and/or diagnose faults, if any.

Family Guy™ Pinball Service Menu Icon Tree

Chapter 2 Chapter 3 Chapter 4 Chapter 5 Chapter 6

*For more detailed information on the Menus and, Sub-Menus, review Section **3**, Chapters **2—6** .*

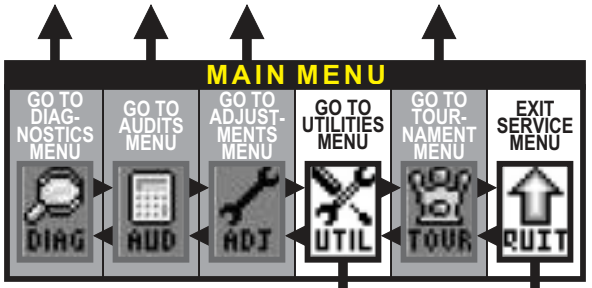

SEE PREVIOUS PAGE.

MORE — These ***non-selectable Icons*** appear in the *selected Menu* only when there are **MORE** *Icons* to the **LEFT** or to the **RIGHT** available for selection. — MORE

EXIT THE SERVICE MENU BY SELECTING THIS ICON IN ANY MENU AND RETURN TO THE ATTRACT MODE.

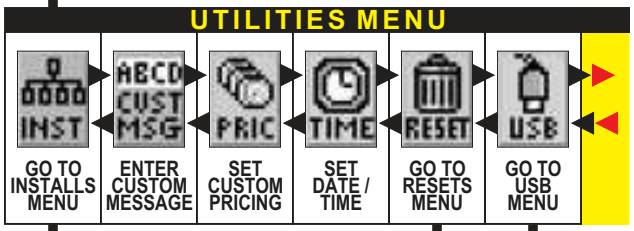

NOTE: Depending on Game Type, Version, selections made, Dip Switch settings, location and/or areas, some *Icons* may appear non-functional *or* may not appear at all. Some *Icons* change depending on selections *(e.g. Selecting and activating the "STRT" Icon [Start Tournament] will be replaced with the "STOP" Icon [Stop Tournament]).* In displays where changes can be made *or* to perform a function, remember, use the **GREEN Button** to go **[BACK]**, exit *or* escape, the **RED Buttons** to **[</–]** DECREASE / **[+/>]** INCREASE a value *or* setting, and the **BLACK Button** to **[SELECT]** next or as 'OK' / 'ENTER'.

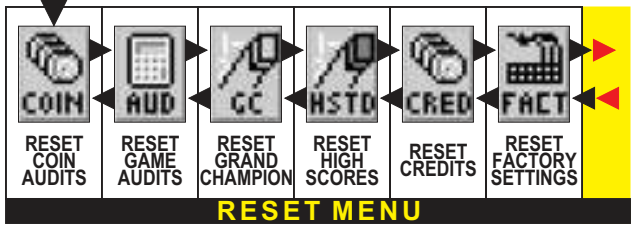

TO UPDATE GAME CODE, **MOVE DIP SWITCH #8** TO **'ON'** *(on CPU/SND PCB).* PERFORM CPU / SND PCB RESET ***PRESS THE WHITE BUTTON.*** FOLLOW ON-SCREEN PROMPTS *(REVIEW INSIDE COVER).*

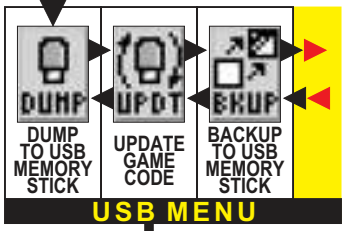

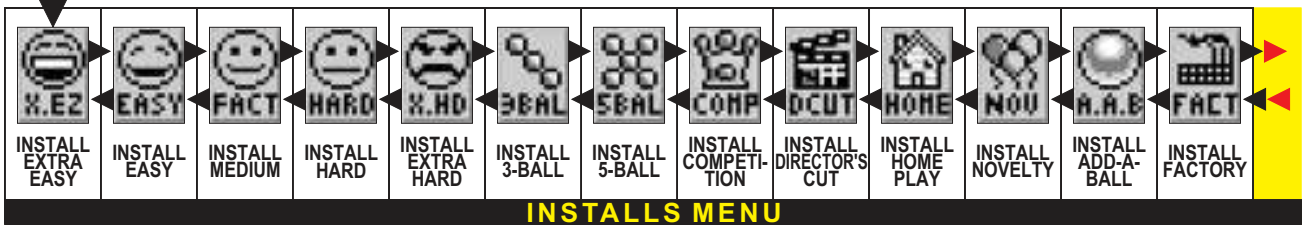

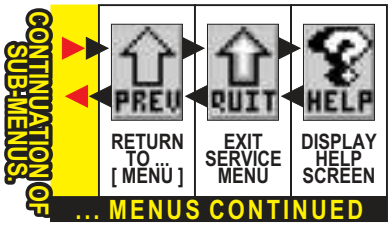

Note: *Press **[SELECT]** to Install; Press **[BACK]** to cancel. After selection of any of the **Install Icons**, the request is installed and returns to the **Install Menu**. The last icon activated before exiting this menu will supercede any previous Icon selected in the group.*

Exit Service Menu

In the **MAIN MENU** and in all **SUB-MENUS** *(where the "QUIT" Icon is present)*, if the "QUIT" *Icon* is selected and *activated*, or the **Green [BACK] Button** is selected repeatedly *(depending on which sub-menu you're in...),* the **SERVICE MENU Session** will be exited and returned to the ***Attract Mode***.

Turning the game on/off will start the *Power-Up Routine.* Upon **Power-Up**, the DISPLAY will indicate the COUNTRY, FILE VERSION and LANGUAGE(S) installed. LANGUAGE/COUNTRY: change via Dip Switch.

The below **Problem / Solution Table** was designed to answer some common problems frequently asked.

Problem / Solution Table

PROBLEM	SOLUTION
Will not enter the **SERVICE MENU** after depressing the **Black [SELECT] Button**.	• Check the Service Switches **[** GREEN, RED (X2) & **BLACK Buttons**] for loose connections or bad ground. • Check the associated wiring harness to/from the CPU/Sound Board, Connector **J13**. • Check CPU/Sound Board for possible failure.
All **Service Buttons [** • • • • **Buttons]** appear nonfunctional.	• Check the Service Switches wiring harness for poor or no connection and/or broken wires.
The **Green Button** in the Attract Mode will not enter the **SERVICE CREDITS MENU** to add Service Credits.	• Check to make sure the Game is not in "**Free Play**." *If the game is set to Free Play, adding Service Credits is not required.* • Check the Service Switches wiring harness for poor or no connection and/or broken wires.
The **Display** "blanks out."	• Check the Dot Matrix Display for loose wiring harness for poor or no connection and/or broken wires. • Check **F1** (3/4A Fuse) on the Display Power Supply Board. Refer to Section **5**, **SCHEMATICS & TROUBLESHOOTING**.
Icons *"scroll"* along continuously in the **MAIN MENU**.	• Check for a stuck switch on either of the **Red Buttons**.
The **Start** and **Flipper Buttons** do not select or activate *Icons* in the **SWITCH TEST MENU**.	• This is normal. These switches are deactivated, as they are a part of the Switch Test. Refer to Section **3**, Chapter **2**, **GO TO DIAGNOSTICS MENU**, **Switch Test**.
Can't move selection of *Icon* with the **Left** and/or **Right Flipper Buttons**.	• Check the **Flipper Buttons** for loose connections or bad Ground and refer to Section **5**, Chapter **2**, Playfield Wiring, #-Flipper Circuit Wiring Diagram. • This is normal ***only*** in ***Diagnostic's Switch & Active Switch Tests*** *(see previous Problem).*
Some *Icons* appear non-functional in the **MENU** or missing.	• Some functionality of the Service Menu may not have been completed during development. If exists, it should only be a non-critical function, such as the "HELP" *Icon,* which will explain the usage of icons. When completed, a software update will correct the problem. Software updates are announced via Service Bulletins (if critical) and on our website **http://www.sternpinball.com/GAME-code.shtml**; view the Game Code Library Message Board Marquee or click **Previous Messages** for past announcements.
In **COIL TEST MENU**, the coils and flashlamps ***do not*** fire after pressing the **Black [SELECT] Button**.	• Ensure the **POWER INTERLOCK SWITCH *is pulled out*** *(see the start of this Chapter).*
In the **SERVICE MENU**, the volume cannot be adjusted with either of the **Red Buttons**.	• The Volume adjustment can only be made when in the **Attract Mode** *(see the start of this Chapter).*
In the **SERVICE MENU**, the display seems to lock up, or the Help Display appears to be non-functional.	• If you cannot clear the situation by exiting back one Menu, exit completely out of the **SERVICE MENU**, and re-enter. If the problem persists, call Technical Support for additional help.

IF YOU NOTE ANY OTHER PROBLEMS or HAVE ANY SYMPTOMS NOT DESCRIBED ABOVE, PLEASE CALL TECHNICAL SUPPORT 800-542-5377 (708-345-7700 OPTION #1), SO WE MAY ASSIST YOU.

To initiate, from the **MAIN MENU**, select the "DIAG" *Icon*. The **DIAGNOSTICS MENU** provides tests for switches, coils, flash lamps, lamps, sounds and dots in the Dot Matrix Display. Each feature may be tested manually or automatically after entering the **SERVICE MENU** *(see Section **3**, Chapter **1**, Service Menu Introduction)*. The **[CYCLING COIL TEST]** / **[FLASH LAMP TEST]** may be used for a quick verification of automatic test functions. The **[SWITCH TEST]** / **[SINGLE COIL TEST]** / **[SINGLE LAMP TEST]** / **[ALL LAMPS TEST]** / **[ROW LAMPS TEST]** / **[COLUMN LAMPS TEST]** / **[FLASH LAMP TEST]** may be used for troubleshooting.

All **DIAGNOSTICS MENU** *Icons* and there usages are explained throughout this chapter in the same order as seen in the Dot Matrix Display. ***NOTE:*** Depending on Game Type, Version, selections made, Dip Switch settings, location and/or areas, some *Icons* may appear non-functional *or* may not appear at all. Some *Icons* change depending on selections *(e.g. Selecting and activating the "STRT" Icon [Start Tournament] will be replaced with the "STOP" Icon [Stop Tournament]).* ***Icons** and/or **functions**, **order** and **operation are subject to change**.*

In displays where changes can be made *or* to perform a function, use the **GREEN Button** to go **[BACK]**, exit *or* escape, the **RED Buttons** to **[< / –]** MOVE BACK / LEFT / DECREASE **/ [+ / >]** MOVE FORWARD / RIGHT / INCREASE a value *or* setting, and the **BLACK Button** to **[SELECT]** next *or* as "OK / ENTER / ENERGIZE."

Important:** Upon **Power-Up** (Game CPU Reset) or opening the **Coin Door** watch the **Display** for any **Alerts.*

This ***audible / visual alert display*** is shown when the **50V / 20V Power** is disabled *(by opening the Coin Door)*. **PULL OUT THE INTERLOCK SWITCH *ONLY* WHILE IN THE SERVICE MENU FOR COIL OR SWITCH TESTING & BURN-IN WHEN THE COIN DOOR IS REQUIRED TO STAY OPEN FOR SERVICE BUTTON USE!** Pulling out the Power Interlock Switch or pressing the 'escape' **Green [BACK] Button** will remove the alert display. Initial display presentation is accompanied by 3 audible tones *(the bright display warning will go dim after approximately 30 seconds).*

This ***alert display*** is shown momentarily during **Game Mode** or **Power-Up** to alert the operator of a device malfunction *(device or mechanism doesn't energize or is energized repeatedly)*. **OPERATOR ALERT!** works by monitoring any *switch activated device* that has the potential to trap a ball when disabled *(e.g. in the Shooter Lane, Scoop or Eject Holes, etc.)*. This alert can also appear if a switch associated with a device *(e.g. Ball Trough, Auto Plunger, etc.)* is stuck closed *(caused by a switch jam or stuck ball)*; the game will activate the device a predetermined number of times and if the problem is still detected, this device *or* switch will be noted in **Switch Alerts** *(next page)* and/or **Technician Alerts** *(Page **18**)*.

Upon entering the **SERVICE MENU**, if an asterisk " * " is displayed after the words "SERVICE MENU," the game has detected possible faulty devices, switches and/or missing pinballs. Press the either of the **Red Buttons** *(short-cut to the TECHNICIAN ALERTS MENU) or* continue into the **SERVICE MENU** *(press the **Black Button** again),* select the "DIAG" *Icon* and "TECH" *Icon* for the **Technician Alerts** information *(Page **18**)*.

CAUTION! Remove all pinballs from the Ball Trough prior to lifting the playfield to it's full upright position for servicing. **PULL OUT** the **Power Interlock Switch** for operation. To eject pinballs, select the "DIAG" *Icon* from the **MAIN MENU** to enter the **DIAGNOSTICS MENU**. Select the "CLR" *Icon* to enter the **BALL TROUGH TEST MENU**. Press the **Black [SELECT] Button**. To return to the **DIAGNOSTICS MENU**, press the **Green [BACK] Button**. *This feature also useful to retrieve a pinball for game testing in **Switch** or **Coil Tests**.*

Go To Switch Menu

To initiate, from the **DIAGNOSTICS MENU**, select the "SW" *Icon*. Switches are configured in an 4 X 16 Matrix of Rows [Switch Drives] and Columns [Sw. Returns] with up to **64** possible switches. Dedicated Switches are configured in a 2 X 16 Matrix of Rows [Dedicated Sw. Drives / Ground] and Column [Ded. Switch Returns] with up to **32** possible dedicated switches *(includes the 8 dip switch positions).* The **SWITCH TEST MENU** consists of three (3) parts: **Switch & Active Switch Tests** and **Switch Alerts** to test ***all*** switches.

Reminder: *The **Flipper & Start Buttons** (part of Switch Tests) are temporarily disabled as **Service Menu Navigation Buttons** during these test(s) so they can be tested and shown on-screen. Pressinng the **Green [BACK] Button** (Dedicated Switch **D-21**), Light Green-Black / Black (GND), will exit **Switch Test** or **Active Switch Test**.*

Switch Test

To initiate, from the **SWITCH MENU**, select the "TEST" *Icon*. Ensure the **Power Interlock Switch** is pulled out if testing with the Coin Door open and the activation of coils is required. Upon entering **Switch Test**, you will notice that some switches are already indicated as closed. In the examples, the 4-Ball Trough Switches **#18**, **#19**, **#20** & **#21** are shown closed *(pinballs at rest in the ball trough),* along with the Flipper E.O.S. Dedicated Switches **D-10** & **D-12** (End-of-Stroke Switches are 'normally closed'). If the game has more flippers with E.O.S. Dedicated Switches, CPU Dip Switch Setting *other than* 1-8 OFF or switches stuck closed, more dots will be indicated *(enter **Active Switch Test** to reveal the names).*

Upon entering **Switch Test**, you will notice that some switches are already indicated as 'closed'. ▼

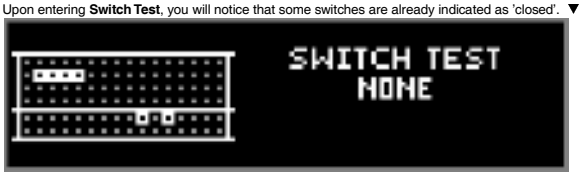

D-24 position is highlighted and accompanied by a short audible tone when pressed. ▼

After pressing the switch *(to make it close)*, the display will indicate the last switch number. ▼

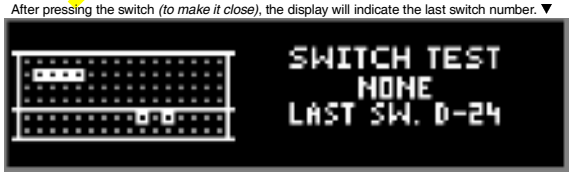

In **Switch Test**, close each switch and observe the display *(switch closure is accompanied by a short audible tone).* In the example, the **Black [SELECT] Button** Dedicated Switch **D-24** is pressed. The Dot Matrix Display will light up *(highlight)* the corresponding *dot* in the on-screen matrix, display the *switch name*, *switch number* and the *Switch Drive / Return wire colors*. When not closing a switch, the display indicates **NONE** and the last switch number closure. For the Switch Matrix Grid and Dedicated Switch Grid, see **Find-It-In-Front: Dr. Pinball, DR. 4** *or* escape out of this test and enter **Active Switch Test** *(described below)* to view the names of the switches closed. ***Note:*** *Pressinng the **Green [BACK] Button** (Ded. Switch **D-21**), Lt. Green-Black / Black (GND), will exit the **Switch Test**.*

CAUTION! COIL MECHANISMS WHEN ACTIVATED HAVE FAST MOVING PARTS! While performing **Switch Test** with the Coin Door closed *or* open *(with the Power Interlock Switch is pulled out)*, **DO NOT USE YOUR FINGER** to test switches which are associated with a coil mechanism such as a Vertical Up-Kicker *(hole with a switch)*, Slingshots, Bumpers, etc..

Typical Switch Wiring & Schematic

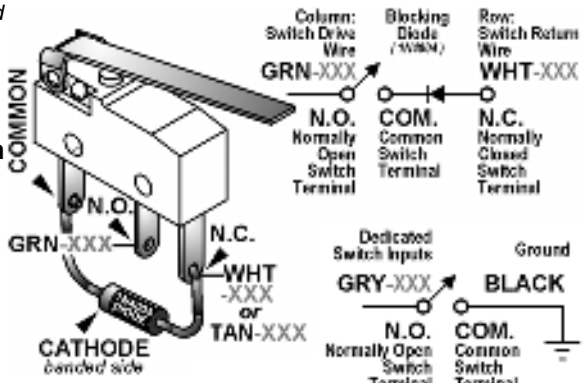

-XXX = Varying Wire Color. See Matrix Grid for color.

Dedicated Switch Schematic

Active Switch Test

To initiate, from the **SWITCH MENU**, select the "ACT" *Icon*. In **Active Switch Test**, if any switches are stuck closed *(or normally closed from the presence of pin-ball(s) as in the Ball Trough),* the display will flash the corresponding dot(s) in the on-screen matrix, display the *name* and the *Switch Drive / Return wire colors*. If more than one switch is closed, the switch information will change with each switch. This cycle continues until all switches are cleared *or* until **Active Switch Test** is exited. In the example, the **Black [SELECT] Button** Dedicated Switch **D-24** is pressed and held down. The display will cycle and flash each dot, naming each switch which is closed. To determine the *switch number,* compare the highlighted dot to the same position in the Switch Matrix Grid, see **Find-It- In- Front: Dr. Pinball, DR. ❹**.

... **D-24** is held down. The display will cycle and flash each dot, naming each switch ... closed. ▼

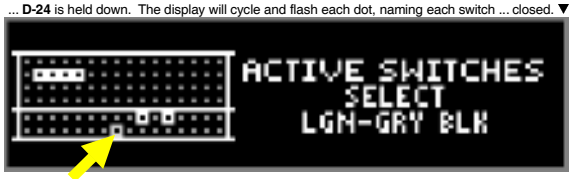

Switch Alerts

To initiate, from the **SWITCH MENU**, select the "ALRT" *Icon*. In **Switch Alerts Menu**, possible inoperable switches are marked with an "X" (OUT OF SERVICE). Mark switches **IN** *or* **OUT OF SERVICE** by pressing the **Black Button** while the intended switch is highlighted and change with either of the **Red Buttons**. Switches which are determined as "OUT OF SERVICE" by the game *or* manually, will be automatically marked as "IN SERVICE" as soon as the game determines a valid switch closure *(after adjusting, fixing or replacing the switch, then testing/actuating the switch). **Note:** A **Factory Reset** will also put the switch back "IN SERVICE" in which the game will need to redetermine if the switch should be marked **OUT OF SERVICE**.*

Go To Coil Menu

To initiate, from the **DIAGNOSTICS MENU**, select the "COIL" *Icon.* Coils **#01 – #16** are typically High Current Coils *(although Low Current Coils may be used in these positions & will be noted).* Coils **#17 – #32** are typically Low Current Coils. Flash Lamps are typically used in positions **#25 – #32** *(although Flash Lamps may be used in any position and will be noted).* Auxiliary Coils may be used in positions **#33 – #35**.

Remember, use the **GREEN Button** to go **[BACK]**, exit *or* escape, the **RED Buttons** to **[< / –]** GO BACK **[+ / >]** GO FORWARD, and the **BLACK Button** to **[SELECT]** ENERGIZE the coil *(solenoid)* or flash lamp.

Single Coil Test

To initiate, from the **COIL MENU**, select the "TEST" *Icon*. Ensure the **Power Interlock Switch** is pulled out if testing with the Coin Door open. Upon entering **Single Coil Test**, you will notice the #1 coil is shown. The Dot Matrix Display will indicate the *coil or flash lamp name*, *coil (solenoid) or flash lamp number* and the *Coil or Flash Lamp Power Line / Drive Transistor Control Line wire colors*. To determine the "Pin-Outs" from the I/O Power Driver Board, the Coil Voltage Gauge-Turns *(e.g. 23-800)* or lamp type *(e.g. #89 or #906 Bulb)*, view the Coils Detailed Chart Table, see **Find-It-In-Front: Dr. Pinball, DR.** ❽ *or* for more on troubleshooting and diagnosing, see Section **5**.

Typical Coil Wiring & Schematic

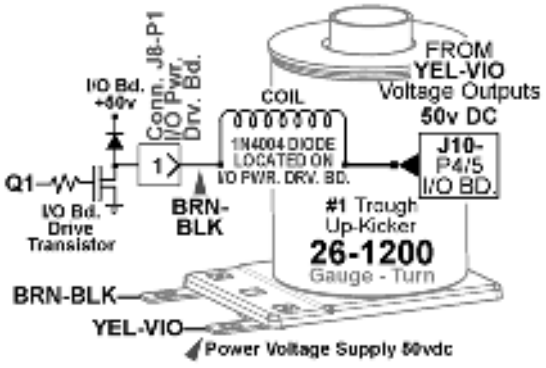

Cycling Coil Test

To initiate, from the **COIL MENU**, select the "CYC" *Icon*. Ensure the **Power Interlock Switch** is pulled out if testing with the Coin Door open. The test pulses each regular coil or flash lamp sequentially *(cycling)* on the Playfield and in the Backbox *(if coils or flash lamps are used).* The Dot Matrix Display indicates the same information you will find in **Single Coil Test**.

Go To Flash Lamps Menu

To initiate, from the **DIAGNOSTICS MENU**, select the "FLASH" *Icon*. The two tests allows the technician to easily spot any burned-out flash lamps and replace them. Unlike **Single Coil Test**, which tests ***all*** coil *(solenoids)*, including flash lamps, **Single** and **Cycling Flash Lamp Tests**, test only the flash lamps used in the game. Flash Lamps are typically used in positions **#25 – #32** *(although Flash Lamps may be used in any position and will be noted).*

Remember, use the **GREEN Button** to go **[BACK]**, exit *or* escape, the **RED Buttons** to **[< / –]** GO BACK **/ [+ / >]** GO FORWARD, and the **BLACK Button** to **[SELECT]** ENERGIZE the flash lamp.

Single Flash Lamp Test

To initiate, from the **FLASH LAMPS MENU**, select the "TEST" *Icon*. Ensure the **Power Interlock Switch** is pulled out if testing with the Coin Door open. Upon entering **Single Flash Lamp Test**, you will notice the first Flash Lamp is shown. The Dot Matrix Display will indicate the *flash lamp name*, *flash lamp number* and the *Flash Lamp Power Line / Drive Transistor Control Line wire colors*. To determine the "Pin-Outs" from the I/O Power Driver Board or lamp type *(e.g. #89 or #906 Bulb),* view the Coils Detailed Chart Table, see **Find-It-In-Front: Dr. Pinball, DR.** ❽ *or* for more on troubleshooting and diagnosing, see Section **5**.

Bulb Types used for Flash Lamps

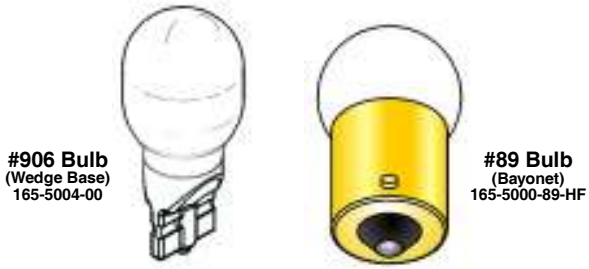

Cycling Flash Lamp Test

To initiate, from the **FLASH LAMPS MENU**, select the "CYC" *Icon* . Ensure the **Power Interlock Switch** is pulled out if testing with the Coin Door open. The test pulses each flash lamp sequentially *(cycling)* on the Playfield and in the Backbox *(if flash lamps are used).* The Dot Matrix Display indicates the same information you will find in **Single Flash Lamp Test**.

Go To Lamp Menu

To initiate, from the **DIAGNOSTICS MENU**, select the "LAMP" *Icon*. Controlled lamps are configured in and 8 X 10 Matrix of Rows [Lamp Returns / Ground] and Columns [Lamp Drives / 18VDC] with up to **80** lamps possible. The **LAMP TEST MENU** consists of five (5) parts: **Single Lamp Test**, **Test All Lamps**, **Row Lamps Test**, **Column Lamps Test** and **Ordered Lamps Test*** to test ***all*** lamps.

Remember, use the **GREEN Button** to go **[BACK]**, exit *or* escape, the **RED Buttons** to **[< / –]** GO BACK / LEFT **/ [+ / >]** GO FORWARD / RIGHT, and the **BLACK Button** to **[SELECT]** next *or* as "OK / ENTER."

Single Lamp Test

Upon entering **Single Lamp Test**, ... the #1 lamp is shown. .... Display will light up ... the *dot* ... ▶

To initiate, from the **LAMP MENU**, select the "ONE" *Icon*. As each lamp is selected, the lamp will light at it's location on the playfield as well as the Dot Matrix Display. Upon entering **Single Lamp Test**, you will notice the #1 lamp is shown. The Dot Matrix Display will light up *(highlight)* the corresponding *dot* in the on-screen matrix, display the *lamp name*, *lamp number* and the *Lamp Return / Drive wire colors*. For the Lamp Matrix Grid, see **Find-It-In-Front: Dr. Pinball, DR. ❻**, at the beginning section of this Service Game Manual.

All Lamps Test

Upon entering **All Lamps Test**, ... the Dot Matrix Display is flashing "**ALL LAMPS ON**" ... ▶

To initiate, from the **LAMP MENU**, select the "ALL" *Icon*. Upon entering **All Lamps Test**, you will notice the Dot Matrix Display is flashing **ALL LAMPS ON** and the lamps on the playfield will be lit, alternating between the rows in the Lamp Matrix Grid. The Dot Matrix Display will light up *(highlight)* all of the *dots* in the on-screen matrix.

Row Lamps Test

Upon entering **Row Lamps Test**, you will notice the #1 lamp row is shown. ▶

To initiate, from the **LAMP MENU**, select the "ROW" *Icon*. As each lamp row is selected, the lamps in the row will light on the playfield as well as the Dot Matrix Display. Upon entering **Row Lamps Test**, you will notice the #1 lamp row is shown. The Dot Matrix Display will light up *(highlight)* the corresponding row of *dots* in the on-screen matrix, display the *lamp row number*, the *Lamp Return wire colors,* the *I/O PCB Connector* and *transistor number*.

Column Lamps Test

Upon entering **Column Lamps Test**, you will notice the #1 lamp column is shown. ▶

To initiate, from the **LAMP MENU**, select the "COL" *Icon*. As each lamp column is selected, the lamps in the column will light on the playfield as well as the Dot Matrix Display. Upon entering **Column Lamps Test**, you will notice the #1 lamp column is shown. The Dot Matrix Display will light up *(highlight)* the corresponding row of *dots* in the on-screen matrix, display the *lamp column number*, *the Lamp Drive (18VDC) wire colors,* the *I/O PCB Connector* and *IC number.*

Bulb Types used for Control Lamps

Typical Lamp Schematic & Wiring

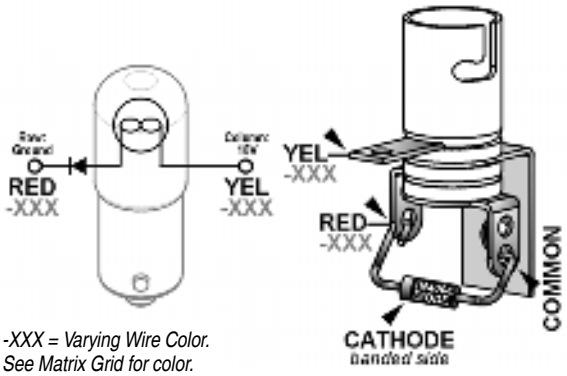

-XXX = Varying Wire Color. See Matrix Grid for color.

** If not required in this game, Icon will not be shown.*

Ordered Lamps Test

To initiate, from the **LAMP MENU**, select the "ORD" *Icon. If required, this Icon will appear in the* ***LAMP MENU***. Identical to **Single Lamp Test**, however, the lamps lit are not in the Lamp Matrix numeric order, but ordered *or* arranged in separate localized grouping(s) for easier lamp checking.

Stewie Motor (Family Guy) Test

To initiate, from the **DIAGNOSTICS MENU**, select the "F.G." *Icon*. Ensure the **Power Interlock Switch** is pulled out when testing with the Coin Door open. *This Menu is provided to allow the technician a simple method of properly testing the Stewie Stepper Motor & Controller PCB Drive (Coil #20) which will not appear in the normal* ***SINGLE COIL TEST MENU*** *or* ***CYCLING COIL TEST MENU*** *(as described on Page* ***15****).*

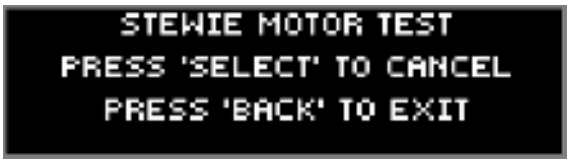

If the Stewie character came out of alignment *(doesn't turn towards the Stewie Mini-Pinball Machine when this feature is activated)*, this test will align Stewie in the correct position.

First ensure the character is not loose and the **Set Screw** is correctly in place to secure the **Character Platform** onto the motor shaft adaptor. The **Set Screw** should tighten up against the " flat " of the Adaptor on the Motor Shaft *(see Section* ***4****, Chapter* ***2****, Item* ***4****,* ***Stewie & Motor Assembly****, on Page* ***87****).*

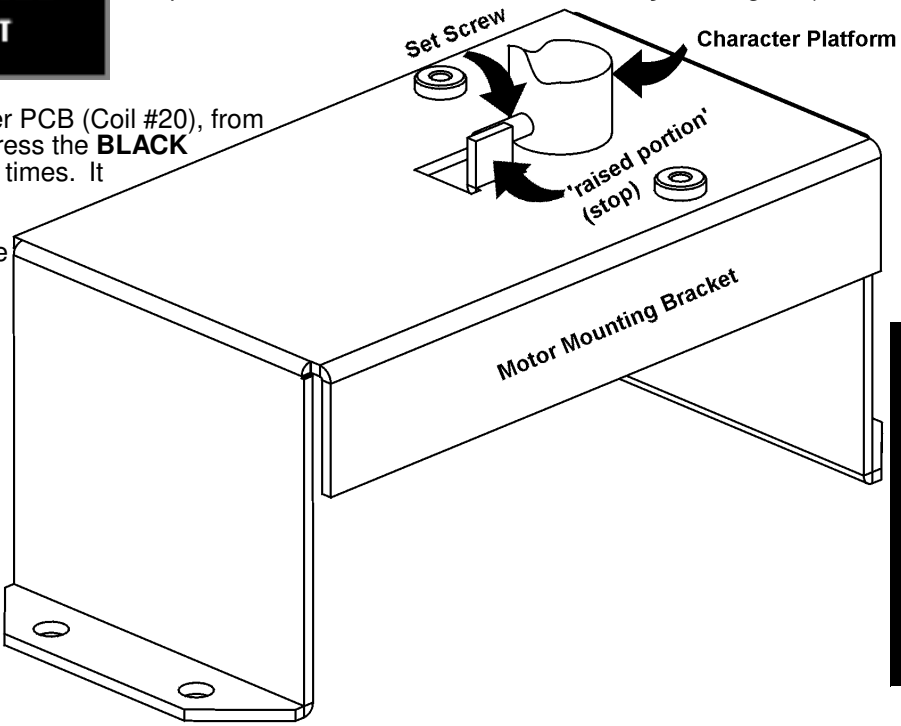

To activate the Stepper Motor Controller PCB (Coil #20), from the **DONKEY MOTOR TEST MENU**, press the **BLACK [SELECT] Button** and let it run a few times. It will pulse the Stepper Motor enough to adjust even the most extreme out-of-alignment scenario; so no matter where the **Set Screw** is at, it will stop against the **raised portion** of the **Motor Mounting Bracket**. Then the Stepper Motor Controller PCB will pulse the Stepper Motor in the opposite direction to align Stewie properly.

View the Coils Detailed Chart Table on Page **DR. ❸** (**Find-It-In-Front**) *or* Section **5**, Pages **96-97** & **144**, for more technical information on the Coil Drive (wire colors) & the Stepper Controller PCB (520-5261-00).

Ball Trough Test

To initiate, from the **DIAGNOSTICS MENU**, select the "CLR" *Icon*. Ensure the **Power Interlock Switch** is pulled out if testing with the Coin Door open. This Menu is provided to allow the technician a simple method of removing the balls from the trough and also, to test functionality of the trough, ensuring proper trough operation. Upon entering **Ball Trough Test**, you will notice that four switches are already indicated as closed. In the example, the 4-Ball Trough Switches **#18**, **#19**, **#20** & **#21** are shown closed *(pinballs at rest in the ball trough).* To return to the **DIAGNOSTICS MENU**, press the **Green [BACK] Button**.

Press the **Black [SELECT] Button** to eject the ball in the first position Switch **#21** (VUK OPTO Trough #1 (R)). Simultaneously, the Dot Matrix Display and the playfield will eject the ball to the Trough Up-Kicker, eject from the Trough Up-Kicker into the Shooter Lane, momentarily closing Switch ***#23*** *(Shooter Lane),* and is ejected onto the playfield where the technician can easily retrieve the pinball or allow the ball(s) to re-enter the trough to continue **Ball Trough Test**. The Dot Matrix Display indicates Switch **#18** (4-Ball Trough #4 (L)) as open as the remaining three (3) pinballs shift over one (1) position to the right. If the technician allows the ejected pinball to reenter the ball trough, the Dot Matrix Display will indicate Switch **#18** as closed. ***REMINDER:*** *Switch* ***#22*** *is the stacking OPTO switch; If more than five (5) pinballs are used, the additional switches will be noted. In this game,* ***four (4)*** *pinballs are used and required for proper operation.*

CAUTION! *Continuous use off the above test may overheat the Trough Up-Kicker Coil.*

Technician Alerts

To initiate, from the **DIAGNOSTICS MENU**, select the "TECH" *Icon*. This Menu is provided to show any switch problems and/or missing pinballs. If this *Icon* is not blinking, there are NO TECHNICIAN ALERTS. If upon entering the **SERVICE MENU** the display indicated an asterisk (*) and "USE –/+ TO VIEW TECH. ALERTS", alerts are present *(the above "TECH" Icon will also blink).*

After selecting this *Icon*, the display will indicate the alert(s). If there are 2 alerts present, the display will indicate (1/2) with the 1st alert on the display. Press the **Red [+ / >] Button** to view the second alert (2/2). The second number in the parenthesis ( ) after the slash (/) indicates how many alerts are present. Refer to the start of this chapter *(bottom of Page **13**)* regarding "Upon entering the **SERVICE MENU** *" indication and to **SWITCH ALERTS** *(Page **14**).* To return to the **DIAGNOSTICS MENU**, press the **Green [BACK] Button**.

NOTE ON SWITCH DETECTION : During game play, activation of switches are continuously monitored. For a switch to be determined as inoperable *or* **OUT OF SERVICE**, up to twenty games *or* so must be played for a switch to be automatically marked as **OUT OF SERVICE**. In programming, if a switch is determined to be faulty, game play is compensated. Switches noted as **OUT OF SERVICE** are determined to be stuck closed *or* open depending on switch usage. Free up the switch actuator, adjust *or* replace, if necessary. Performing a valid switch closure will put the switch back "IN SERVICE."

Determination of switch usage can be checked in **Audits** *(review Sec. **3**, Chp. **3**, **GO TO AUDITS MENU**).* Find the associated Audit with the switch in question and check usage; compare the numbers to commonly used switches. After any switch is checked and repaired *or* replaced, it's suggested to test the switch in the **Switch Test** *or* **Single Coil Test** *(reviewed earlier in this chapter, Pages **14-15**)* where the associated coil to the switch can be tested as well. After correcting the problem, the switch will marked "IN SERVICE" and the switch is again monitored as specified above. *Only you can determine if a switch marked OUT OF SERVICE is actually inoperable, or if it is just not getting actuated during game play.*

NOTE ON PINBALL DETECTION : While in **TECHNICIAN ALERTS MENU**, if the following is displayed, the game has detected one (1) *or* more pinball(s) missing and has compensated for the lost pinball(s) to provide normal game play.

During game play, a pinball can get trapped *or* stuck. If after approximately 15 seconds of inactivity or "no scoring," **Ball Search** is started. ***Note:*** *If the pinball is in the Plunger Lane or "held" on the flipper, no **Ball Search** will be performed.* The game will perform one **Ball Search** in an attempt to "find" or free-up the pinball.

If the game does not see a switch closure *(indicating the pinball has not been found),* the Dot Matrix Display may indicate **[LOCATING PINBALLS PLEASE WAIT ...]**, during which **Ball Search** will continue until the timer runs out *(this feature will not happen if the game is in Competition Mode; Ball Search will continue until the pinball is found, unstuck and/or replaced manually).* The display will momentarily acknowledge the missing pinball(s). The game will provide another pinball into play and will compensate for the lost pinball. Game play will appear normal.

Note: *This detection and compensation will happen with every pinball, if each suffers the same fate of a ball trap. If **all** balls get trapped, the game cannot be played or started until the situation is rectified.*

Important: *Determine where the pinball is!* ***Do not add pinball(s)*** *until it is determined the pinball(s) are indeed missing and not just stuck. The most common places for a pinball to be stuck is in device holes (ejects and VUKs) or* ball troughs. Determine that all devices are functionally properly. Check around plastic pieces and ramps to see if the pinball got jammed *or* stuck.

When the found pinball *or* a replacement pinball is added to the Ball Trough, the **Technican Alert** will immediately clear and will then indicate any remaining alerts *(if present) or* **NO TECHNICIAN ALERTS**.

Enter the **BALL TROUGH TEST** *(review the previous page)* to cycle the pinballs and to check proper switch and coil operation. *If a pinball was added, and the originally stuck pinball has freed itself at a later time, the game will not operate correctly.*

NOTE ON DEVICE MALFUNCTION : While in **TECHNICIAN ALERTS MENU**, if the following is displayed, the game has detected a "device malfunction." Check the device indicated (coil and/or switch).

Knocker Test

To initiate, from the **DIAGNOSTICS MENU**, select the "KNO- CKER" *Icon*. The digitally mastered "Knocker" is sounded. The *knocker sound* is used to alert the player if he/she has received a special, replay or a credit from the Match Award feature. Press the **Black [SELECT] Button** to activate the knocker. To return to the **DIAGNOSTICS MENU**, press the **Green [BACK] Button**.

FACTOID: *The knocker got it's name from the 'original knocker' (20th century pinball games), which used a coil and when energized (fired), the plunger would strike a wood panel inside the cabinet.*

Sound / Speaker Test

To initiate, from the **DIAGNOSTICS MENU**, select the "SPKR" *Icon*. This system produces true digital stereo sound from Backbox & Cabinet Speakers or *"Mono"* on the Cabinet Speaker *(when used by itself)*. This Menu is provided to allow the technician a simple method of testing the speakers if rewired or replaced.

Upon entering **Sound / Speaker Test**, you will notice the Dot Matrix Display indicating the first option of *available* music *and/or* sound(s) in this test. Press the **Red [+ / >] Button** to cycle through the *available* music *and/or* sounds, and press the **Black [SELECT] Button** to play the option shown in the Dot Matrix Display. Press the **Green [BACK] Button** to exit.

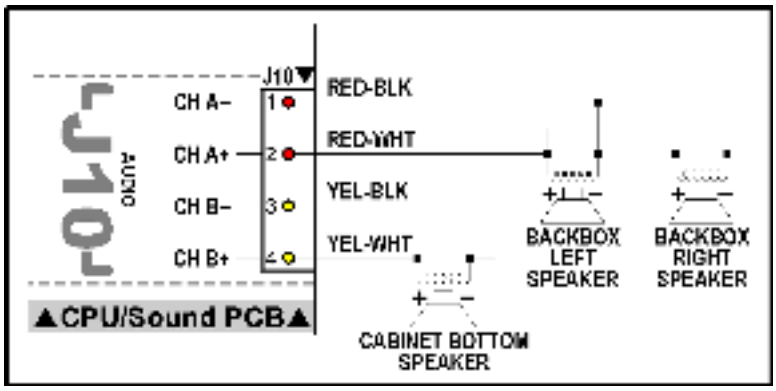

Speaker Phase Testing

Connections to each of speakers are polarized and each must be connected appropriately for the best quality sound. If one speaker has the positive and negative connections reversed with respect to the other one, bass frequencies will not be produced properly and the overall sound quality will be poor. To test for proper speaker phasing, use the **Sound / Speaker Test** to cycle through the available music and sound. If the sound is not balanced or doesn't sound correct, check the speaker wiring.

1. Check each speaker for polarity markings. If the speakers have polarity markings, verify that the Backbox Speaker's **RED-BLK** Wires and the Cabinet Speaker **YEL-BLK** Wire(s) are connected to the negative (–) terminal.

2. Disconnect the speaker output **Connector J10 (AUDIO)** from the CPU / Sound PCB *(in the Backbox)* and connect a 1.5-volt battery across each speaker pair one at a time while observing the speakers.

3. Make sure the positive (**+**) battery terminal is connected to the positive lead [J10, Pin-2, **CH A+**] (**RED-WHT**) *or* [J10, Pin-4, **CH B+**] (**YEL-WHT**) each time. As the connection is made, check speaker cone movement; proper connections are indicated by outward movement.

Begin Burn-In

To initiate, from the **DIAGNOSTICS MENU**, select the "BURN" *Icon*. After selecting this *Icon*, the ***Burn-In Test*** will start. Ensure the **Power Interlock Switch** is pulled out if testing with the Coin Door open *(required for coil function)*. Upon entering **Burn-In Test**, the game will exercise all CPU I/O Functions: **Dot Matrix Display Test**, **Coil Cycling Testing**, **All Lamps Test** and **Sound / Speaker Test**. Press the **Green [BACK] Button**, to pause and to view the cumulative Burn-In minutes. Press the **Green [BACK] Button** again to return to the **DIAGNOSTICS MENU**.

Note: *To reset Burn-In minutes back to **0:00**, see Section **3**, Chapter **5**, **GO TO RESET MENU** (via the UTILITIES MENU), **Reset Factory Settings**. ⚠ **CAUTION:** Performing a **FACTORY RESET** will reset all other information as well (read Section **3**, Chapter **5**, **GO TO UTILITIES MENU**, for more information).*

Dot Matrix Test

To initiate, from the **DIAGNOSTICS MENU**, select the "DOT TEST" *Icon*. After selecting this *Icon* the **Dot Matrix Test** immediately begins. The Dot Matrix Display will immediately and continuously illuminate and cycle each of the ***5 Tests for 1 pass each***. To return to the **DIAGNOSTICS MENU**, press the **Green [BACK] Button**.

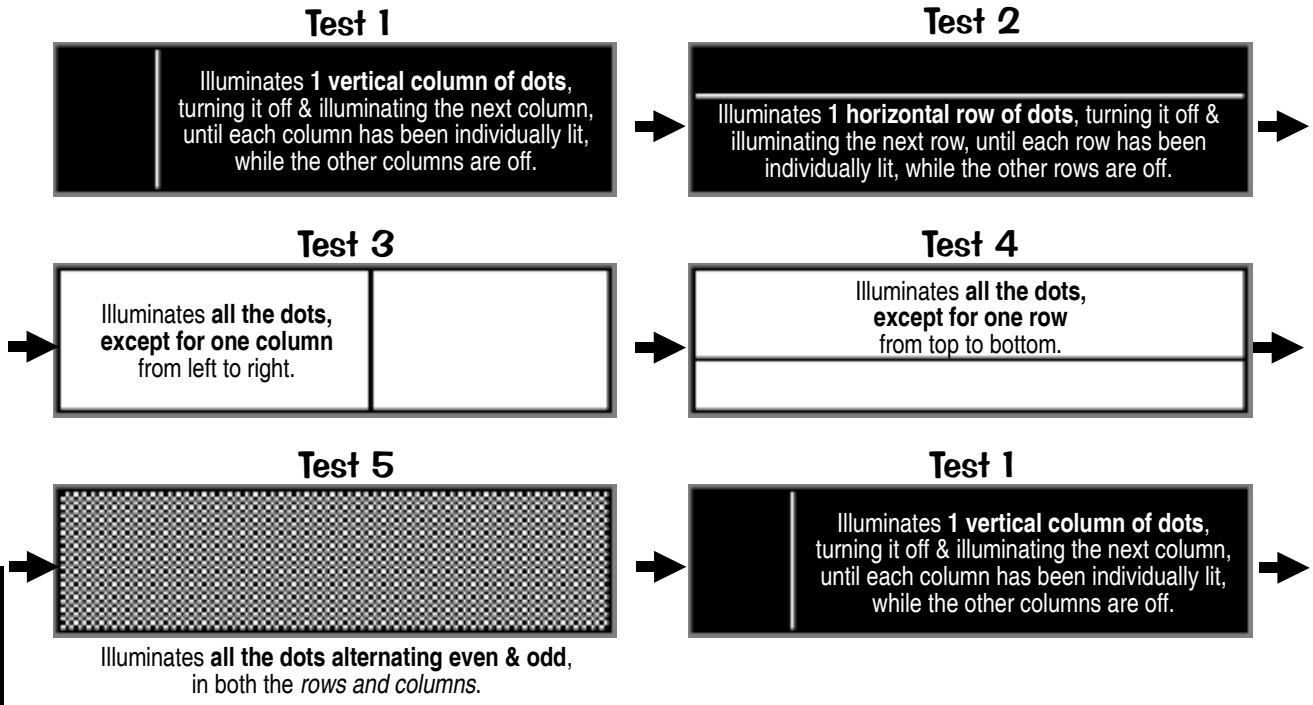

To initiate, from the **MAIN MENU**, select the "AUD" *Icon*. The **AUDITS MENU** provides **156*** Audits for accounting purposes and for evaluation of *Game Programming*. The Audits are divided into 4 groups: • **Earnings Audits [#1 – #13]**, • **Standard Audits [#1 – #59]**, • **Feature Audits (Programming Use Only) [#1 – #70]** and • **Tournament Audits [#1 – #14]**, "T AUD" *Icon* provided as an alternate access to Tournament Audits *(*if data is available)*. For more information on the **TOURNAMENT MENU**, *review Section **3**, Chapter **6**, **GO TO TOURNAMENT MENU**). Try the "**DUMP AUDITS TO USB**" feature to create a text file of your audits. Don't forget to set the DATE & TIME in the **UTILITIES MENU**. See Sec. **3**, Chp. **5**, **GO TO UTILITIES MENU**, for more information.*

Audits which are named **Proprietary** are also for ***Future Expansion*** or ***Programming***. Game code may get upgraded during production; compare all Audits in the Dot Matrix Display with the manual and make any corrections, as necessary. Audits are subject to change *(with or without notice)*.

All **AUDITS MENU** *Icons* and there usages are explained throughout this chapter in the same order as seen in the Dot Matrix Display. ***NOTE:*** Depending on Game Type, Version, selections made, Dip Switch settings, location and/or areas, some *Icons* may appear non-functional *or* may not appear at all. ***Icons** and/or **functions**, **order** and **operation are subject to change***.

In displays where changes can be made *or* to perform a function, use the **GREEN Button** to go **[BACK]**, exit *or* escape, the **RED Buttons** to **[< / –]** MOVE BACK / LEFT **/ [+ / >]** MOVE FORWARD / RIGHT to view the next audit in the group, and the **BLACK Button** to **[SELECT]** the sub-menus.

Earnings Audits [#1 – #13]

To initiate, from the **AUDITS MENU**, select the "EARN" *Icon*. The Dot Matrix Display will indicate the *audit number (in this group)*, *audit name* and the *audit total or value*. The current audit will remain on the display until the next audit is viewed or when this sub-menu is exited.

#1 **TOTAL PAID CREDITS [0] :** Total number of *Paid Credits.*

#2 **FREE GAME PERCENTAGE [0%] :** Percentage value is 'Total Free Plays' (Standard Audit **15**) divided by 'Total Plays' (Standard Audit **16**).

#3 **AVERAGE BALL TIME [0:00] :** In seconds, the average ball time is derived from the total play time divided by Standard Audit **1**, Total Balls Played.

#4 **AVERAGE GAME TIME [0:00] :** The average game time is expressed in minutes and seconds.

#5 **COINS THROUGH LEFT SLOT [0] :** Total 'Left Coin Slot' Dedicated Switch (**D-1**) closures.

#6 **COINS THROUGH RIGHT SLOT [0] :** Total 'Right Coin Slot' Dedicated Switch (**D-3**) closures.

#7 **COINS THROUGH CENTER SLOT [0] :** Total 'Center Coin Slot' Dedicated Switch (**D-2**) closures.

#8 **COINS THROUGH FOURTH SLOT:** Total '4th Coin Slot' Dedicated Switch (**D-4**) closures.

#9 **COINS THROUGH FIFTH SLOT:** Total '5th Coin Slot' Dedicated Switch (**D-5**) closures.

#10 **TOTAL COINS [0] :** Total amount of coins registered through all the *Coin Slots.*

#11 **TOTAL EARNINGS [USD 0.00] :** Total cash value accumulated since the last Factory Reset occurred *(reveiw Section **3**, Chapter **5**, **GO TO RESET MENU** (via the **UTILITIES MENU**), **Reset Coin Audits**).*

#12 **METER CLICKS [0] :** Total number of money clicks accumulated.
Based on the country's lowest coin denomination used for the game credit.

#13 **SOFTWARE METER [0] :** Continuing total of Meter Clicks.
This audit cannot be reset; the display shows the constant addition of Meter Clicks.

Standard Audits [#1 – #59]

To initiate, from the **AUDITS MENU**, select the "S.P.I." *Icon*. The Dot Matrix Display will indicate the *audit number (in this group)*, *audit name* and the *audit total or value*. The current audit will remain on the display until the next audit is viewed or when this sub-menu is exited.

#1 **TOTAL BALLS PLAYED [0] :** Total number of *Regular* and *Extra Balls.*

#2 **TOTAL EXTRA BALLS [0] :** Total number of *Extra Balls* awarded.

#3 **EXTRA BALLS PERCENTAGE [0%] :** Percentage value is 'Total Extra Balls' (Standard Audit **2**) divided by 'Total Plays' (Standard Audit **16**).

#4 **REPLAY 1 AWARDS [0] :** Total *Awards (Credits, Extra Balls or Scores)* for Level 1.

#5 **REPLAY 2 AWARDS [0] :** Total *Awards (Credits, Extra Balls or Scores)* for Level 2.

#6 **REPLAY 3 AWARDS [0] :** Total *Awards (Credits, Extra Balls or Scores)* for Level 3.

#7 **REPLAY 4 AWARDS [0] :** Total *Awards (Credits, Extra Balls or Scores)* for Level 4.

#8 **TOTAL REPLAYS [0] :** Total *Awards (Credits, Extra Balls or Scores)* for exceeding *Replay Score Levels.*

#9 **REPLAY PERCENTAGE [0%] :** Percentage value is 'Total Replays' (Standard Audit **8**) divided by 'Total Plays' (Standard Audit **16**). *The percentage reflects replay total awards for exceeding replay score levels.*

#10 **TOTAL SPECIALS [0] :** Total *Awards (Credits, Extra Balls, or Scores)* for making *Specials.*

#11 **SPECIAL PERCENTAGE [0%] :** Percentage value is 'Total Specials' (Standard Audit **10**) divided by 'Total Plays' (Standard Audit **16**).

#12 **TOTAL MATCHES [0] :** Total *Credits* awarded for matching the last two digits of the score with the *System-Generated Match Number* at the end of the game. Percentage of *Match Credits* is adjustable from **0%** to **10%** or **OFF** by Standard Adjustment **19,** Match Percentage, *if enabled (review Section **3**, Chapter **4**, **GO TO ADJUSTMENTS MENU**, **Standard Adjustments***).

#13 **HIGH SCORE AWARDS [0] :** Total *Awards (Credits, Extra Balls, or Scores)* for exceeding the High-Score-To-Date scores.

#14 **HIGH SCORE PERCENT [0%] :** Percentage value is 'High Score Awards' (Standard Audit **13**) divided by 'Total Plays' (Standard Audit **16**).

#15 **TOTAL FREE PLAYS [0] :** Total *Free Credits* for *Replays, High-Score-To-Date, Specials and Match.*

#16 **TOTAL PLAYS [0] :** This total is derived by adding the sum of 'Total Paid Credits' (Earnings Audit **1**) and 'Total Free Plays' (Standard Audit **13**). *Note: Free credits are not recorded in the Audit until actually used.*

#17 **0.0M–1.99M SCORES [00] :** Total number of games the Player's final score was between **0** and **1,999,990** points.

#18 **2.0M–3.99M SCORES [00] :** Total number of games the Player's final score was between **2,000,000** and **3,999,990** points.

#19 **4.0M–5.99M SCORES [00] :** Total number of games the Player's final score was between **4,000,000** and **5,999,990** points.

#20 **6.0M–7.99M SCORES [00] :** Total number of games the Player's final score was between **6,000,000** and **7,999,990** points.

#21 **8.0M–9.99M SCORES [00] :** Total number of games the Player's final score was between **8,000,000** and **9,999,990** points.

#22 **10.0M–12.49M SCORES [00] :** Total number of games the Player's final score was between **10,000,000** and **12,499,990** points.

#23 **12.5M–14.99M SCORES [00] :** Total number of games the Player's final score was between **12,500,000** and **14,499,990** points.

#24 **15.0M–17.49M SCORES [00] :** Total number of games the Player's final score was between **15,000,000** and **17,499,990** points.

#25 **17.50M–19.99M SCORES [00] :** Total number of games the Player's final score was between **17,500,000** and **19,999,990** points.

#26 **20.0M–24.99M SCORES [00] :** Total number of games the Player's final score was between **20,000,000** and **24,499,990** points.

#27 **25.0M–29.99M SCORES [00] :** Total number of games the Player's final score was between **25,000,000** and **29,999,990** points.

Standard Audits 28-59 continued on the next page.

#28 **30.0M–39.99M SCORES [00] :** Total number of games the Player's final score was between **30,000,000** and **39,999,990** points.

#29 **40.0M–49.99M SCORES [00] :** Total number of games the Player's final score was between **40,000,000** and **49,999,990** points.

#30 **50.0M–74.99M SCORES [00] :** Total number of games the Player's final score was between **50,000,000** and **74,999,990** points.

#31 **75.0M–99.99M SCORES [00] :** Total number of games the Player's final score was between **75,000,000** and **99,999,990** points.

#32 **100.0M–149.99M SCORES [00] :** Total number of games the Player's final score was between **100,000,000** and **149,999,990** points.

#33 **150.0+M SCORES:** Total number of games the Player's final score was **150,000,000** points and over.

#34 **AVERAGE SCORES [00] :** This total is derived by adding the Final Score of each game to a table and dividing this sum by 'Total Plays' (Standard Audit **16**).

#35 **SERVICE CREDITS [0] :** Total 'Green [SERVICE CREDIT] Button' Dedicated Switch (**D-21**) closures in **Attract Mode** *(not while in the **SERVICE MENU**). See Section **3**, Chapter **1**, **Service Switch X4 Set Access & Use**, for how to receive Service Credits. See Section **3**, Chapter **5**, **GO TO RESET MENU** (via GO TO UTILITIES MENU), **Reset Credits**, for how to delete credits.*

#36 **BALL SEARCH STARTED [0] :** Total number of times the game performed a *Ball Search*.

#37 **LOST BALL FEEDS [0] :** Total number of times the game added a pinball to play when it could not find a pinball after *Ball Search (review Section **3**, Chapter **2**, **GO TO DIAGNOSTICS MENU**, **Technicians Alert** [Pinball Detection]).*

#38 **LOST BALL GAME STARTS [0] :** Total number of times the game started with a pinball missing from the ball trough at the start of a game *(review Section **3**, Chapter **2**, **GO TO DIAGNOSTICS MENU**, **Technicians Alert** [Pinball Detection]).*

#39 **LEFT DRAINS [0] :** Total 'Left Outlane' Switch (**24**) closures.

#40 **CENTER DRAINS [0] :** Total number of times the pinball had drained when the last switch closed was not the 'Left Outlane' (**24**) *or* the 'Right Outlane' Switch (**29**).

#41 **RIGHT DRAINS [0] :** Total 'RIght Outlane' Switch (**29**) closures.

#42 **TILTS [0] :** Total 'Tilt Pendulum' Dedicated Switch (**D-17**) closures.

#43 **TOTAL BALLS SAVED [0] :** Total number of times this feature was used. This feature is adjustable from **0:01–0:15**, **AUTO** or **NO BALL SAVES** *(review Section **3**, Chapter **4**, **GO TO ADJUSTMENTS MENU,** Standard Adjustment **48**, Ball Save Time). This feature is enabled at the start of each pinball and is disabled as soon as a predetermined number of switches are "closed" **or** the allocated time has expired.*

#44 **LEFT FLIPPER USED [0] :** Total 'Left Flipper Button' Dedicated Switch (**D-9**) closures in **Game Mode**.

#45 **RIGHT FLIPPER USED [0] :** Total 'Right Flipper Button' Dedicated Switch (**D-11**) closures in **Game Mode**.

#46 **0 - 1 MINUTE GAMES [0] :** Total games in which the total game time was between **0:00** and **1:00** minute.

#47 **1 – 1.5 MINUTE GAMES [0] :** Total games where play time was between **1:00** and **1:30** minutes.

#48 **1.5 – 2 MINUTE GAMES [0] :** Total games where play time was between **1:30** and **2:00** minutes.

#49 **2 – 2.5 MINUTE GAMES [0] :** Total games where play time was between **2:00** and **2:30** minutes.

#50 **2.5 – 3 MINUTE GAMES [0] :** Total games where play time was between **2:30** and **3:00** minutes.

#51 **3 – 3.5 MINUTE GAMES [0] :** Total games where play time was between **3:00** and **3:30** minutes.

#52 **3.5 – 4 MINUTE GAMES [0] :** Total games where play time was between **3:30** and **4:00** minutes.

#53 **4 – 5 MINUTE GAMES [0] :** Total games where play time was between **4:00** and **5:00** minutes.

#54 **5 – 6 MINUTE GAMES [0] :** Total games where play time was between **5:00** and **6:00** minutes.

#55 **6 – 8 MINUTE GAMES [0] :** Total games where play time was between **6:00** and **8:00** minutes.

#56 **8 – 10 MINUTE GAMES [0] :** Total games where play time was between **8:00** and **10:00** minutes.

#57 **10 – 15 MINUTE GAMES [0] :** Total games where play time was between **10:00** and **15:00** minutes.

#58 **15+ MINUTE GAMES:** Total games in which the total game time was **15:00** minutes and over.

#59 **RECENT REPLAY PERCENT:** *Percent figured with programming thresholds for a determined number of games. The % reflects replay total awards for exceeding replay score levels.*

Feature Audits [#1 – #70]

To initiate, from the **AUDITS MENU**, select the "F.G." *Icon*. The Dot Matrix Display will indicate the *audit number (in this group)*, *audit name* and the *audit total or value*. The current audit will remain on the display until the next audit is viewed or when this sub-menu is exited.

Feature Audits Definition: Programming Use Only. *The proprietary information Total number of times a feature was started, awarded, lit, played and/or completed (awarded); also, the total number of Switch Closures during certain modes or features are tracked (a predetermined single/multiple variations of switch closures are used to determine the lighting and/or completion of the feature stated).*

SEE DOT MATRIX DISPLAY FOR CURRENT FEATURE AUDITS

FEATURE AUDITS [#1 – #70] ▼

Nr.	FEATURE AUDIT NAME	YOUR RESULT
1	LEFT OUTLANE	
2	RIGHT OUTLANE	
3	LOIS RETURN LANE	
4	DEATH RETURN LANE	
5	RIGHT RETURN LANE	
6	MEG SHOTS	
7	CHRIS SHOTS	
8	LEFT RAMP	
9	DEATH TARGET	
10	4-BANK DROPS COMPLETED	
11	MONKEY TARGET	
12	BEER CAN SHOTS	
13	DRUNKEN CLAM	
14	UTURN SHOTS	
15	STEWIE SHOTS	
16	LOIS SHOTS	
17	SPINNERS	
18	TV HOLE	
19	LEFT NEWTON ROLL OVER	
20	RIGHT NEWTON ROLL OVER	
21	PIRATE TARGET	
22	STEWIE PINBALL STARTS	
23	AVG. STEWIE PINBALL TIME	
24	MINI BRIAN COMPLETES	
25	MINI MEG COMPLETES	
26	MINI PETER COMPLETES	
27	MINI LOIS COMPLETES	
28	MINI CHRIS COMPLETES	
29	STEWIE MULTIBALL STARTS	
30	FART MULTIBALL STARTS	
31	CRAZY CHRIS STARTS	
32	MYSTERY LIT	
33	MYSTERY COLLECTED	
34	MYS. [MYSTERY] SPECIAL	
35	MYS. [MYSTERY] NOT SPECIAL	
36	MYS. [MYSTERY] POPS AT MAX	
37	MYS. [MYSTERY] EXTRA BALL	
38	MYS. [MYSTERY] START MBALL	
39	MYS. [MYSTERY] HOLD BONUS	
40	MYS. [MYSTERY] COLLECT BONUS	
41	MYS. [MYSTERY] LIGHT TV MODE	
42	MYS. [MYSTERY] SUPER	
43	MYS. [MYSTERY] DEATH	
44	MYS. [MYSTERY] POST	
45	MYS. [MYSTERY] PINBALL	
46	MYS. [MYSTERY] BIG POINTS	
47	MYS. [MYSTERY] BIGGER POINTS	
48	MYS. [MYSTERY] BONUS X	
49	MYS. [MYSTERY] SPOT CAST	
50	MYS. [MYSTERY] CRAZY CHRIS	
51	CAN COLLECT BEERS	
52	CAN GIGGITY GIGGITY	
53	CAN HAPPY HOUR	
54	CAN REMEMBER WHEN	
55	CAN LARD MULTIBALL	
56	BUMP PETER	
57	BUMP LOIS	
58	BUMP MEG	
59	BUMP CHRIS	
60	BUMP BRIAN	
61	BUMP STEWIE	
62	TV LIT	
63	GOOD OLD BOYS STARTS	
64	SUPER GRIFFINS STARTED	
65	CHICKEN FIGHT STARTED	
66	SEXY PARTY STARTED	
67	IPECAC CONTEST STARTED	
68	LARD BOZO SET LIGHT	
69	LARD BOZO STARTS	
70	GAME POST 2MIN GAME	

Note: *Audits are subject to change (with or without notice).*

Tournament Audits [#1 – #14] subject to change

"T AUD" *Icon* provided as an alternate access to Tournament Audits *(if data is available)*. For more information on the **TOURNAMENT MENU**, *review Section **3**, Chapter **6**, **GO TO TOURNAMENT MENU**).*

Dump Audits To USB (Memory Stick)

To initiate, from the **USB MENU**, select the "DUMP" *Icon.* Follow the on-screen prompts to perform a **Data Dump** *(download).* A dated text file will be created on your USB Memory Stick. *Don't forget to set the DATE & TIME first. See Section **3**, Chapter **5**, **GO TO UTILITIES MENU**, for more information.*

To initiate, from the **MAIN MENU**, select the "ADJ" *Icon*. The **ADJUSTMENTS MENU** provides **89** Adjustments to vary Game Functions to customize for your particular needs. The Adjustments are divided into 2 groups: • **Standard Adjustments [#1 – #63]** and • **Feature Adjustments (Programming Use Only) [#1 – #26]**. *For **quick** and **easy customization** of **Game Play Difficulty** or **Game Play Type** or how to **RESET ONLY** the Adjustments, review Section **3**, Chapter **5**, **GO TO INSTALLS MENU** (via the **UTILITIES MENU**). **Shortcut: Enter Custom Message** (Standard Adj. **41**) and **Set Custom Pricing** (via Standard Adjustment **18**, Game Pricing) can be quickly accessed via the **UTILITIES MENU**, see Section **3**, Chapter **5**, **GO TO UTILITIES MENU**.*

Adjustments which are named **Proprietary** are also for ***Future Expansion*** or ***Programming***. Game code may get upgraded during production; compare all Adjustments in the Dot Matrix Display with the manual and make any corrections, as necessary. Adjustments are subject to change *(with or without notice)*.

All **ADJUSTMENTS MENU** *Icons* and there usages are explained throughout this chapter in the same order as seen in the Dot Matrix Display. ***NOTE:*** Depending on Game Type, Version, selections made, Dip Switch settings, location and/or areas, some *Adjustments* may appear non-functional *or* may not appear at all. ***Adjustments** and/or **functions**, **order** and **operation are subject to change**. **If in doubt use the Factory Default Settings.***

In displays where changes can be made *or* to perform a function, use the **GREEN Button** to go **[BACK]**, exit *or* escape, the **RED Buttons** to **[< / –]** SELECT PREVIOUS **[+ / >]** SELECT NEXT when the adjustment name *or* setting is flashing and the **BLACK Button** to **[SELECT]** toggle between the ADJUSTMENT and SETTING.

Standard Adjustments [#1 – #63]

To initiate, from the **ADJUSTMENTS MENU**, select the "S.P.I." *Icon*. The Dot Matrix Display will indicate the *adjustment number (in this group)*, *adjust. name*, *adjust. setting* and *comment line.* The current adjustment will remain on the display until the next adjustment is viewed or when this sub-menu is exited.

#1 **REPLAY TYPE:** Set to **AUTO**, **NONE**, **FIXED** *or* **DYNAMIC**. Factory Default = **AUTO**. **AUTO** & **DYNAMIC** are based on the **Replay Percentage** *(Standard Adjustment **2**)*. • Select **FIXED** to give the player a **Replay Award** *(Standard Adjustment **3**)* as the **Replay Levels** *(Standard Adjustments **7-10**)* are reached. The **Replay Level(s)** *(Standard Adjustments **7-10**)* will not adjust up or down. • Select **AUTO** to give the player a **Replay Award** *(Standard Adjustment **3**)* as the **Auto Replay Start** *(Standard Adjustment **5**)* score level is reached. This *score threshold* will automatically adjust up or down based on the **Replay Percentage** chosen *(Standard Adjustment **2**)*. The game periodically adjusts based upon the Player Base Skill Level. • Select **DYNAMIC** to give the player a **Replay Award** *(Standard Adjustment **3**)* as the **Dynamic Replay Start** (Standard Adjustment **6**) score level is reached. This *score threshold* will go down every game based on the **Replay Percentage** *(Standard Adjustment **2**)* selected. • Select **NONE** to turn off Standard Adjustments **2-11**.

#2 **REPLAY PERCENTAGE:** Set between **01% – 50**%. Factory Default = **10%**. Adjustable only if **AUTO** *or* **DYNAMIC** is installed in Replay Type, Standard Adjustment **1**. For [**DYNAMIC**] example, if the *score threshold* is 50,000,00 and the **Replay Percentage** selected is **10%**, every game a player does not reach the *score threshold*, the score to reach will drop by 5,000,000 (10% of 50M). This will continue every game until the *threshold score* is reached. Thus, if the score then drops to 15,000,000 after 7 games and is then achieved, the **Replay Award** *(Standard Adjustment **3**)* is given. The original *score threshold* is added to 15,000,000 and is now 65,000,000. It will then take the same player 10 games to reach 15,000,000. *This adjustment is shown only if **AUTO** or **DYNAMIC** is installed in **Replay Type** (Standard Adjustment **1**).*

Standard Adjustments 3-18 continued on the next page.

#3 **REPLAY AWARD:** Set to **CREDIT**, **TICKET***, **TOKEN*** *or* **EXTRA BALL**. Factory Default = **CREDIT**. Set the type of award to be given to the player when the appropriate Replay Score threshold or level is acheived. If awarding a ***CREDIT***, ***TICKET*** *or* ***TOKEN*** is prohibited in your area, select **EXTRA BALL**. *This adjustment is not shown if* ***NONE*** *is installed in* ***Replay Type*** *(Standard Adjustment* ***1****).*

Note:* *If* ***TICKET* *or* ***TOKEN*** *is selected, the game will require an optional Ticket or Token Dispenser and then* ***Q24 Option*** *(Standard Adj.* ***55****) must be changed accordingly.*

#4 **REPLAY LEVELS:** Set between **1 – 4** for the number of Replay Levels to be active. Factory Default = **1**. *This adjustment is not shown if* ***NONE*** *is installed in* ***Replay Type*** *(Standard Adjustment* ***1****).*

#5 **AUTO REPLAY START:** Set between **5,000,000 – 150,000,000** *(increments of 1,000,000)* for the Auto Replay Start threshold. Factory Default = **20,000,000**. *This adjustment is shown only if* ***AUTO*** *is installed in* ***Replay Type*** *(Standard Adjustment* ***1****).*

#6 **DYNAMIC REPLAY START:** Set between **5,000,000 – 150,000,000** *(increments of 1,000,000)* for the Dynamic Replay Start threshold. Factory Default = **60,000,000**. *This adjustment is shown only if* ***DYNAMIC*** *is installed in* ***Replay Type*** *(Standard Adjustment* ***1****).*

#7 **REPLAY LEVEL #1:** Set between **5,000,000 – 150,000,000** *(increments of 1,000,000).* Factory Default = **15,000,000**. Set the first *or* only Replay Level. *This adjustment is shown only if* ***FIXED*** *is installed in* ***Replay Type*** *(Standard Adjustment* ***1****).*

#8 **REPLAY LEVEL #2:** Set between **5,000,000 – 150,000,000** *(increments of 1,000,000).* Factory Default = **30,000,000**. Set the second Replay Level. *This adjustment is shown only if* ***FIXED*** *is installed in* ***Replay Type*** *(Standard Adjustment* ***1****) and* ***2*** *is intalled in* ***Replay Levels*** *(Standard Adjustment* ***4****).*

#9 **REPLAY LEVEL #3:** Set between **5,000,000 – 150,000,000** *(increments of 1,000,000).* Factory Default = **45,000,000**. Set the third Replay Level. *This adjustment is shown only if* ***FIXED*** *is installed in* ***Replay Type*** *(Standard Adjustment* ***1****) and* ***3*** *is intalled in* ***Replay Levels*** *(Standard Adjustment* ***4****).*

#10 **REPLAY LEVEL #4:** Set between **5,000,000 – 150,000,000** *(increments of 1,000,000).* Factory Default = **60,000,000**. Set the fourth Replay Level. *This adjustment is shown only if* ***FIXED*** *is installed in* ***Replay Type*** *(Standard Adjustment* ***1****) and* ***4*** *is intalled in* ***Replay Levels*** *(Standard Adjustment* ***4****).*

#11 **REPLAY BOOST:** Set to **YES** *or* **NO**. Factory Default = **YES**. When set to **YES**, while **FIXED** or **AUTO** maintains the Replay Levels, Replay Boost works as follows: If the Replay Level is 7,000,000 *(regardless of the Replay Percentage)*, and the Player scores 20M, and receives the Replay Award, the next game the Current Replay Level is added to this base. Thus the next game, the Replay Level is 14,000,000. The Player agains scores 20M. The next game the Player will need to achieve 21,000,000 to earn the Replay Award. If the Player does not achieve 21,000,000, the next game reverts back to the original 7,000,000 or the new adjusted level maintained by the Fixed or Autopercentaging Feature. *This adjustment is shown only if* ***AUTO*** *or* ***FIXED*** *is installed in* ***Replay Type*** *(Standard Adjustment* ***1****).*

#12 **SPECIAL LIMIT:** Set between **1 – 5**, **UNLIMITED** *or* **NO SPECIALS**. Factory Default = **1**. Set the maximum number of *Specials* that may be accumulated per game.

#13 **SPECIAL PERCENTAGE:** Set between **1% – 50%**. Factory Default = **10%**. This adjustment allows the operator to adjust how frequently the ***Special Feature*** is made available to the player. *This adjustment is not shown if* ***NO SPECIALS*** *is installed in* ***Special Limit*** *(Standard Adjustment* ***12****).*

#14 **SPECIAL AWARD:** Set to **CREDIT**, **TICKET***, **TOKEN***, **POINTS** *or* **EXTRA BALL**. Factory Default = **CREDIT**. Select **EX. BALL** or **POINTS** if awarding a ***CREDIT*** or ***TICKET / TOKEN*** is prohibited in your area. *This adjustment is not shown if* ***NO SPECIALS*** *is installed in* ***Special Limit*** *(Standard Adjustment* ***12****).*

Note:* *If* ***TICKET* *or* ***TOKEN*** *is selected, the game will require an optional Ticket or Token Dispenser and then* ***Q24 Option*** *(Standard Adj.* ***55****) must be changed accordingly.*

#15 **FREE GAME LIMIT:** Set between **1 – 9**, **UNLIMITED** *or* **NO FREE GAMES**. Factory Default = **5**. Set the maximum number of *Free Games* that may be accumulated per game.

#16 **EXTRA BALL LIMIT:** Set between **1 – 9**, **UNLIMITED** *or* **NO EXTRA BALLS**. Factory Default = **5**. Set the number of *Extra Balls* that may be accumulated per game.

#17 **EXTRA BALL PERCENTAGE:** Set between **1% – 50%**. Factory Default = **25%**. This adjustment allows the operator to adjust how frequently the ***Extra Ball Feature*** is made available to the player. *This adjustment is not shown if* ***NO EXTRA BALLS*** *is installed in* ***Extra Ball Limit*** *(Standard Adjustment* ***16****).*

#18 **GAME PRICING:** There are two (2) methods available for *Coin Switch Programming*: **Standard** & **Custom**. Set between **AUSTRALIA 1 – UK 6** *or* **CUSTOM**. Factory Default = **USA 10**. *Shortcut:* ***Set Custom Pricing*** *and instructions, review Section* ***3****, Chapter* ***5****,* ***GO TO UTILITIES MENU****,* ***Set Custom Pricing****.* The appropriate Dip Switch Setting (Dip Sw. 1-8 location CPU/Sound PCB SW1) in relationship to the Pricing Scheme selected is important *(view the tables on the following pages for more information).*

Standard Adjustment 18, Game Pricing, continued on the next page.

USA Standard Pricing Select Table

CPU/SOUND PCB DIP SWITCH SW1 SETTING	COUNTRY SETTING OPTION(S)	COIN MECHANISMS (SWITCHES) COINS THRU ... SLOT: LEFT	CENTER	RIGHT	4TH	PRICING SCHEME *Number of Plays (Credits) for Price Amount Shown* *See "Appendix J" for Coin Cards Examples & Info!*	Requires SPI Coin Card(s) Part Number
Pos. 1 2 3 4 5 6 7 8 — Default Highlighted						USD // UNITED STATES DOLLAR // [$]	
ON / OFF	USA 1	0.25	1.00	0.25		1/0.25	755-5400-01-Y
	USA 2					1/0.50 2/0.75 3/1.50	755-5400-02-Y
	USA 3					1/0.50	755-5400-02-Y
	USA 4					1/0.50	755-5400-02-Y
	USA 5					1/0.50 2/1.00 3/1.50 5/2.00	755-5400-00-Y
	USA 6					1/0.50 2 /'4 X 25¢' 3 /$ 1.00 Bill	755-5400-00-Y
	USA 7					1/0.50 2/1.00 4/1.50 6/2.00	
	USA 8					1/0.50 3/1.00	755-5400-00-Y
	USA 9					1/1.00	755-5400-07-Y
	USA 10					1/0.75 2/1.50 3/2.00	755-5400-11-Y

HIGHLIGHTED = *Factory Default*

HIGHLIGHTED = *Not Shown on Coin Card*

*For **USA 6** and **USA 7** use: 755-5400-02-Y*
USA 6 Note:** If player uses X4 25¢ quarters = 2 plays. **However, $1 bill = 3 plays!

◀ Used to promote the Bill Validator.

International (non-Euro) Standard Pricing Select Table

CPU/SOUND PCB DIP SWITCH SW1 SETTING	COUNTRY SETTING OPTION(S)	COIN MECHANISMS (SWITCHES) COINS THRU ... SLOT: LEFT	CENTER	RIGHT	4TH	PRICING SCHEME *Number of Plays (Credits) for Price Amount Shown* *See "Appendix J" for Coin Cards Examples & Info!*	Requires SPI Coin Card(s) Part Number
Pos. 1 2 3 4 5 6 7 8 — Default Highlighted						AUD // AUSTRALIAN DOLLARS // [$AUS]	
ON ▲ ▲ ▲ ▲ / OFF ▼ ▼ ▼ ▼	AUSTRALIA 1	0.20	1.00	2.00		1/1.00 3/2.00	755-5406-00-Y
	AUSTRALIA 2					1/1.00	(1 Side)
Pos. 1 2 3 4 5 6 7 8 — Default Highlighted						CAD // CANADIAN DOLLARS // [$CAN]	
ON ▲ ▲ / OFF ▼ ▼ ▼ ▼	CANADA 1 [25¢ door]	0.25	0.25	1.00	2.00	1/0.50 2/0.75 3/1.00	755-5400-00-Y -01-Y *or* -02-Y
ON ▲ ▲ ▲ / OFF ▼ ▼ ▼	CANADA 2 [dollar door]	1.00		2.00		1/1.00 3/2.00	755-5400-10-Y
Pos. 1 2 3 4 5 6 7 8 — Default Highlighted						HRK // CROATIAN KUNA // [kuna]	
ON ▲ ▲ ▲ / OFF ▼ ▼ ▼ ▼	CROATIA	1	2	5		1/3 2/5	755-5410-00-Y (2-Sided)
Pos. 1 2 3 4 5 6 7 8 — Default Highlighted						DKK // DANISH KRONER // [Kr]	
ON ▲ ▲ / OFF ▼ ▼ ▼ ▼	DENMARK 1	1	5	10	20	1/3 2/5	755-5402-00-Y
	DENMARK 2					1/2 2/4 3/5 4/7 5/9 7/10	(2-Sided)
Pos. 1 2 3 4 5 6 7 8 — Default Highlighted						JPY // JAPANESE YEN // [¥]	
ON ▲ ▲ ▲ / OFF ▼ ▼ ▼ ▼	JAPAN 1	100		100		1/100	755-5408-01-Y
	JAPAN 2					1/100 3/200	(2-Sided)
Pos. 1 2 3 4 5 6 7 8 — Default Highlighted						TOKEN // *Middle East currency used to buy token* // [TOKEN]	
ON ▲ ▲ ▲ ▲ / OFF ▼ ▼ ▼ ▼	MIDDLE EAST	token		token		1/1	755-5400-06-Y (use Side 1)
Pos. 1 2 3 4 5 6 7 8 — Default Highlighted						NZD // NEW ZEALAND DOLLAR // [$NZD]	
ON ▲ / OFF ▼ ▼ ▼ ▼	NEW ZEALAND 1	1		2		1/1	755-5406-00-Y
	NEW ZEALAND 2					1/1 3/2	(Side 2)
Pos. 1 2 3 4 5 6 7 8 — Default Highlighted						NOK // NORWEGIAN KRONE // [Kr]	
ON ▲ ▲ / OFF ▼ ▼ ▼ ▼	NORWAY 1	10	5	20		1/10	755-5403-01-Y
	NORWAY 2					1/10 3/20	(2-Sided)
Pos. 1 2 3 4 5 6 7 8 — Default Highlighted		▼ LEFT SWITCH CAN BE WIRED TO BILL ACCEPTOR ▼				RUB // RUSSIAN RUBLE // [Ruble]	
ON ▲ ▲ ▲ / OFF ▼ ▼ ▼ ▼	RUSSIA	10	5	1		1/5	755-5411-00-Y (2-Sided)
Pos. 1 2 3 4 5 6 7 8 — Default Highlighted						ZAR // SOUTH AFRICAN RAND // [R]	
ON ▲ ▲ / OFF ▼ ▼ ▼ ▼	SO. AFRICA 1	0.50	1.00	1.00	1.00	1/2.00	755-5409-01-Y
	SO. AFRICA 2					1/3.00 2/5.00	(2-Sided)
Pos. 1 2 3 4 5 6 7 8 — Default Highlighted						SEK // SWEDISH KRONOR // [kr]	
ON ▲ ▲ ▲ / OFF ▼ ▼ ▼ ▼	SWEDEN 1	1	5	10		1/10 2/15 3/20	755-5404-00-Y
	SWEDEN 2					1/5	(2-Sided)
Pos. 1 2 3 4 5 6 7 8 — Default Highlighted						CHF // SWISS FRANCS // [Sf]	
ON ▲ ▲ / OFF ▼ ▼ ▼ ▼	SWITZERLAND 1	1	2	5		1/1 2/2 3/3 4/4 6/5	755-5405-00-Y
	SWITZERLAND 2					1/1 3/2 5/3 7/4 9/5	(2-Sided)
Pos. 1 2 3 4 5 6 7 8 — Default Highlighted						TWD // TAIWANESE DOLLAR // [TWD]	
ON ▲ ▲ / OFF ▼ ▼ ▼ ▼	TAIWAN	10		10		1/10	755-5412-00-Y (use Side 1)
Pos. 1 2 3 4 5 6 7 8 — Default Highlighted		▼ 5TH COIN SLOT NOT AVAILABLE WITH CUSTOM PRICING ▼				GPB // UNITED KINGDOM POUNDS // [£]	
ON ▲ ▲ ▲ / OFF ▼ ▼ ▼ ▼	UK 1	LEFT 0.10	CENTER 0.50	RIGHT 1.00	4TH 0.20	5TH 2£ ▲ Coin Only	3/1.00 7/2.00 — 755-5407-00-Y
	UK 2						4/1.00 — 755-5407-01-Y*
	UK 3						1/0.50 2/1.00 3/1.50 5/2.00 — 755-5407-01
	UK 4						1/0.30 2/0.60 3/0.90 4/1.00 — 755-5407-01-Y*
	UK 5						1/1.00 3/2.00 — 755-5407-01
	UK 6						3/2.00 — *use blank side — 755-5407-01-Y*

HIGHLIGHTED = *Factory Default*

HIGHLIGHTED = *Not Shown on Coin Card*

Standard Adjustment 18, Game Pricing, continued on the next page.

Euro 1-12 Summary & International (Euro) Standard Pricing Select Table

CPU/SOUND PCB DIP SWITCH SW1 SETTING										COUNTRY SETTING OPTION(S)	COIN MECHANISMS (SWITCHES) COINS THRU ... SLOT: LEFT	CENTER	RIGHT	4TH	PRICING SCHEME *Number of Plays (Credits) for Price Amount Shown* *See "Appendix J" for Coin Cards Examples & Info!*				Requires SPI Coin Card(s) Part Number
Pos.	1	2	3	4	5	6	7	8	Default Highlighted						EUR // EUROPEAN UNION EUROS // [€]				
ON	S	E	E	B	E	L	O	W	Euro 1					1/0.50				755-5401-01-Y
OFF	S	E	T	T	I	N	G	S	Euro 2					1/0.50	2/1.00	3/1.50	5/2.00	755-5401-02-Y
Euro 1-12 are alternate settings for countries using the Euro.									Euro 3					1/0.50		3/1.00		755-5401-03-Y
HIGHLIGHTED = Factory Default									Euro 4					1/0.50	2/1.00	3/1.50	6/2.00	755-5401-04-Y
									Euro 5					1/0.50	3/1.00	4/1.50	7/2.00	755-5401-05-Y
HIGHLIGHTED = Not Shown on Coin Card									Euro 6					2/0.50				755-5401-06-Y
									Euro 7	0.50	1.00	2.00	optional 0.20 optional	1/1.00	2/2.00	3/3.00	5/4.00	755-5401-07-Y
									Euro 8					1/1.00		3/2.00		755-5401-08-Y
									Euro 9					1/1.00		2/1.50	3/2.00	755-5401-09-Y
									Euro 10					1/1.00		3/2.00	7/3.00	755-5401-10-Y
									Euro 11					1/1.00		4/2.00		755-5401-11-Y
									Euro 12					2/1.00	4/2.00	6/3.00	9/4.00	755-5401-12-Y

*For a different **Euro Pricing Scheme** (other than Factory Default listed below), scroll through **Standard Adjustment 18**: Euro 1-12 or CUSTOM* for new setting (reference above Euro 1-12 Summary). Keep the Country Dip Switch Setting the same as listed below.*

Pos.	1	2	3	4	5	6	7	8	Default Highlighted					EUR // EUROPEAN UNION EUROS // [€]			Sec. 3: Go To Adjust.
ON	▲								AUSTRIA Euro 9	0.50	1.00	2.00		1/1.00	2/1.50	3/2.00	755-5401-09-Y
OFF	▼	▼	▼	▼	▼	▼	▼	▼									
Pos.	1	2	3	4	5	6	7	8	Default Highlighted								
ON		▲							BELGIUM Euro 1	0.50	1.00	2.00		1/0.50			755-5401-01-Y
OFF	▼		▼	▼	▼	▼	▼	▼									
Pos.	1	2	3	4	5	6	7	8	Default Highlighted								
ON	▲		▲						FINLAND Euro 8	0.50	1.00	2.00		1/1.00	3/2.00		755-5401-08-Y
OFF		▼		▼	▼	▼	▼	▼									
Pos.	1	2	3	4	5	6	7	8	Default Highlighted								
ON		▲	▲						FRANCE Euro 10	0.50	1.00	2.00		1/1.00	3/2.00	7/3.00	755-5401-10-Y
OFF	▼			▼	▼	▼	▼	▼									
Pos.	1	2	3	4	5	6	7	8	Default Highlighted								
ON	▲	▲	▲						GERMANY 1					1/0.50			755-5401-01-Y
OFF				▼	▼	▼	▼	▼	GERMANY 2	0.50	1.00	2.00		1/0.50	2/1.00	3/1.50	5/2.00	755-5401-02-Y
									GERMANY 3					1/0.50	2/1.00	3/1.50	6/2.00	755-5401-04-Y
Pos.	1	2	3	4	5	6	7	8	Default Highlighted								
ON	▲	▲	▲	▲					GREECE Euro 8	0.50	1.00	2.00		1/1.00	3/2.00		755-5401-08-Y
OFF					▼	▼	▼	▼									
Pos.	1	2	3	4	5	6	7	8	Default Highlighted								
ON				▲					ITALY 1	0.50		0.50		1/0.50			755-5401-01-Y
OFF	▼	▼	▼		▼	▼	▼	▼	ITALY 2					1/1.00	3/2.00		755-5401-08-Y
Pos.	1	2	3	4	5	6	7	8	Default Highlighted								
ON			▲						NETHERLANDS Euro 3	0.50	1.00	2.00		1/0.50	3/1.00		755-5401-03-Y
OFF	▼	▼		▼	▼	▼	▼	▼									
Pos.	1	2	3	4	5	6	7	8	Default Highlighted								
ON	▲				▲				PORTUGAL	0.50		0.50		1/0.50			755-5401-01-Y
OFF		▼	▼	▼		▼	▼	▼									
Pos.	1	2	3	4	5	6	7	8	Default Highlighted								
ON		▲			▲				SPAIN Euro 3	0.50	1.00	2.00		1/0.50	3/1.00		755-5401-03-Y
OFF	▼		▼	▼		▼	▼	▼									

HIGHLIGHTED = *Factory Default* HIGHLIGHTED = *Not Shown on Coin Card*

For the associated **Coinage Card** required *if the Factory Default Setting was changed*, view on-line at:

http://www.sternpinball.com/coinagecards.shtml

You can download and print the replacement card. *Adobe® Reader 5.0 or higher required (links on site).* Use **Yellow Card Stock**: **ASTROBRIGHTS® SOLAR YELLOW #65 FROM WAUSAU PAPER PRODUCTS** (Stock #22731)

#19 **MATCH PERCENTAGE:** Set between **0% – 10%** *or* **OFF**. Factory Default = **9%**. At **0**% the *Match Animation Feature* occurs at the end of the game but never awards the **Match Award** *(Standard Adjustment **20**)*. Set to **OFF**, no ***Match Animation Feature*** is shown.

#20 **MATCH AWARD:** Set to **CREDIT**, **TICKET*** *or* **TOKEN***. Factory Default = **CREDIT**. *This adjustment is not shown if **OFF** is installed in **Match Percentage** (Standard Adjustment **19**).*

Note:* If **TICKET or **TOKEN** is selected, the game will require an optional Ticket or Token Dispenser and then **Q24 Option** (Standard Adj. **55**) must be changed accordingly.*

#21 **BALLS PER GAME:** Set between **1 – 10**. Factory Default = **3**. Set the number of balls per game.

Standard Adjustments 22-36 continued on the next page.

#22 **TILT WARNINGS:** Set between **0 – 3**. Factory Default = **2**. Set the number of Plumb Bob Tilt Switch closures before the ball in play is tilted. *Each closure generates an audible alert and/or display alert.*

#23 **CREDIT LIMIT:** Set between **4 – 50**. Factory Default = **30**. Set the maximum credits allowed.

#24 **ALLOW HIGH SCORES:** Set to **YES** *or* **NO**. Factory Default = **YES**. When set to **YES**, if a player exceeds the Default Grand Champion *or* 1-4 High Scores, the player may receive a **High Score Award** *(Standard Adjustment **25**)* and enter their **3 Initials** *or* **10-Letter Name** *(Standard Adjustment **36**).* Set to **NO** to disable this feature. *The following Standard Adjustments 25-37 are not shown if **NO** is installed.*

#25 **HIGH SCORE AWARD:** Set to **CREDIT**, **TICKET*** or **TOKEN***. Factory Default = **CREDIT**. Set the type of award to be given to the player when the appropriate **Grand Champion Score** *or* **High Score #1 – #4** threshold *or* level is acheived. If awarding a ***CREDIT***, ***TICKET*** *or* ***TOKEN*** is prohibited in your area, install **NO** in **Allow High Scores** (Standard Adjustment **24**). *This adjustment is not shown if **NO** is installed in **Allow High Scores** (Standard Adjustment **24**).*

****Note:** If **TICKET** or **TOKEN** is selected, the game will require an optional Ticket or Token Dispenser and then **Q24 Option** (Standard Adj. **55**) must be changed accordingly.*

#26 **GRAND CHAMPION AWARDS:** Set between **0 – 5**. Factory Default = **1**. Set the number of **High Score Award**(s) *(Std. Adj. **25**),* awarded for exceeding the Grand Champion Score *(Standard Adjustment **31**). This adjustment is not shown if **NO** is installed in **Allow High Scores** (Standard Adjustment **24**).*

#27 **HIGH SCORE #1 AWARDS:** Set between **0 – 3**. Factory Default = **1**. Set the number of **High Score Award**(s) *(Std. Adj. **25**)*, awarded for exceeding the High Score #1 *(Standard Adjustment **32**). This adjustment is not shown if **NO** is installed in **Allow High Scores** (Standard Adjustment **24**).*

#28 **HIGH SCORE #2 AWARDS:** Set between **0 – 2**. Factory Default = **0**. Set the number of **High Score Award**(s) *(Std. Adj. **25**)*, awarded for exceeding the High Score #2 *(Standard Adjustment **33**). This adjustment is not shown if **NO** is installed in **Allow High Scores** (Standard Adjustment **24**).*

#29 **HIGH SCORE #3 AWARDS:** Set between **0 – 1**. Factory Default = **0**. Set the number of **High Score Award**(s) *(Std. Adj. **25**)*, awarded for exceeding the High Score #3 *(Standard Adjustment **34**). This adjustment is not shown if **NO** is installed in **Allow High Scores** (Standard Adjustment **24**).*

#30 **HIGH SCORE #4 AWARDS:** Set between **0 – 1**. Factory Default = **0**. Set the number of **High Score Award**(s) *(Std. Adj. **25**)*, awarded for exceeding the High Score #4 *(Standard Adjustment **35**). This adjustment is not shown if **NO** is installed in **Allow High Scores** (Standard Adjustment **24**).*

#31 **GRAND CHAMPION SCORE:** Set between **1,000,000 – 1,000,000,000** *(increments of 1,000,000).* Factory Default = **75,000,000**. Set the desired **Grand Champion Score** level a player needs to exceed to earn the **High Score Award** *(Standard Adjustment **25**).* A score higher than the default, cannot be reset by Standard Adjustment **37**, **HSTD Reset Count**. *The Grand Champion Score will revert to the Factory Default Score **ONLY** if a **Reset Grand Champion** is performed in the **RESET MENU** (via the **UTILITIES MENU**, see Section **3**, Chapter **5**) or if the game is without power for more than 12 hours after the CPU/Sound PCB Coin Cell Battery is expired or removed. This adjustment is not shown if **NO** is installed in **Allow High Scores** (Standard Adjustment **24**).*

#32 **HIGH SCORE #1:** Set between **1,000,000 – 1,000,000,000.** Factory Default = **55,000,000**. Set the desired **High Score #1** level a player needs to exceed to earn the **High Score Award** *(Standard Adjustment **25**).* A score higher than the default, will be reset by Standard Adjustment **37**, **HSTD Reset Count**. *The High Score will revert to the Factory Default Score **ONLY** if a **Reset High Scores** is performed in the **RESET MENU** (via the **UTILITIES MENU**, see Section **3**, Chapter **5**) or if the game is without power for more than 12 hours after the CPU/Sound PCB Coin Cell Battery is expired or removed. This adjustment is not shown if **NO** is installed in **Allow High Scores** (Standard Adjustment **24**).*

#33 **HIGH SCORE #2:** Set between **1,000,000 – 1,000,000,000.** Factory Default = **40,000,000**. Set the desired **High Score #2** level a player needs to exceed ... *(continued in Standard Adjustment **32** definition above).*

#34 **HIGH SCORE #3:** Set between **1,000,000 – 1,000,000,000.** Factory Default = **30,000,000**. Set the desired **High Score #3** level a player needs to exceed ... *(continued in Standard Adjustment **32** definition above).*

#35 **HIGH SCORE #4:** Set between **1,000,000 – 1,000,000,000.** Factory Default = **25,000,000**. Set the desired **High Score #4** level a player needs to exceed ... *(continued in Standard Adjustment **32** definition above).*

#36 **HSTD (HIGH SCORE TO DATE) INITIALS:** Set to **3 INITIALS** *or* **10 LETTER NAME**. Factory Default = **3 INITIALS**. When set to **3 INITIALS**, the player is allowed only 3 initials to input. When set to **10 LETTER NAME**, the player is allowed to enter 10 initials to input. *This adjustment is not shown if **NO** is installed in **Allow High Scores** (Standard Adjustment **24**).*

Standard Adjustments 37-49 continued on the next page.

#37 **HSTD (HIGH SCORE TO DATE) RESET COUNT:** Set between **100 – 9900** *or* **OFF** *(increments of 100)*. Factory Default = **2000**. Set the number of games between "automatic resets" of High Scores back to the Factory Defaults for ***ONLY*** Standard Adj. **32 – 35, High Score #1 – #4**. *The High Score will revert to the Factory Default Scores when the number of games stated is reached.* ***Reset High Scores*** *can be performed in the* ***RESET MENU*** *(via the* ***UTILITIES MENU****, see Sec.* ***3****, Chp.* ***5****) anytime or if the game is without power for more than 12 hours after the CPU/Sound PCB Coin Cell Battery is expired or removed. This adjustment is not shown if* ***NO*** *is installed in* ***Allow High Scores*** *(Standard Adj.* ***24****).*

#38 **FREE PLAY:** Set to **YES** or **NO**. Factory Default = **NO**. When set to **YES**, no coins are required for *Game Play.*

#39 **LANGUAGE:** Set to **ENGLISH**, **GERMAN**, **FRENCH**, **SPANISH** *or* **ITALIAN**. Factory Default = **ENGLISH**. Set the language for the game. Language of game is also shown in the Dot Display *(along with the Game Title and code version)* at the start-up routine which follows a game reset *or* power-up.

#40 **PLAYER LANGUAGE SELECT:** Set to **YES** *or* **NO**. Factory Default = **YES**. When set to **YES**, after the player presses the **Start Button** *(to start a game with adequate credit)*, the player has the option to choose a language by pressing either **Flipper Button** before game start *(options of languages installed are shown on the Dot Display).* ***Note:*** *If set to* ***NO*** *or if only one langauge is installed and the setting is set to* ***YES****, the game will start immediately after the* ***Start Button*** *press. Language(s) available are dependent on game destination from the factory. Other languages may be available on-line for download and installed on your game. With the proper dip switch installed, the langauge option(s) can be changed. For more information or help, call Technical Support at 800-542-5377 (708-345-7700).*

#41 **CUSTOM MESSAGE:** Set to **ON**, **CHANGE** *or* **OFF**. Factory Default = **ON**. *Shortcut:* ***Enter Custom Message*** *and instructions, review Sec.* ***3****, Chp.* ***5****,* ***GO TO UTILITIES MENU****,* ***Enter Custom Message****.*

#42 **FLASH LAMP POWER:** Set to **NORMAL**, **OFF** *or* **DIM**. Factory Default = **NORMAL**. When set to **DIM**, the Flash Lamps impulse power is reduced by **25**% and when set to **OFF** the Flash Lamps will not flash. For Flash Lamps used in this game, **Go To Flash Lamps Menu** via the **DIAGNOSTICS MENU** *(see Section* ***3****, Chapter* ***2****,* ***GO TO DIAGNOSTICS MENU****, Page* ***15****).*

#43 **COIL PULSE POWER:** Set to **NORMAL**, **HARD** *or* **SOFT**. Factory Default = **NORMAL**. When set to **HARD**, the coil pulse power is ***increased*** by **12.5**% of the normal pulse rate. When set to **SOFT** the coil pulse power is ***decreased*** by **12.5**% of the normal pulse rate. This adjustment is provided to compensate for *Low Line* or *High Line voltage* conditions where the solenoids (coils) appear to *kicking too weak or too hard*. Adjust as required.

#44 **KNOCKER VOLUME:** Set to **NORMAL**, **OFF** *or* **LOW**. Factory Default = **NORMAL**. When set to **LOW**, the volume is decreased 50%. When set to **OFF**, no sound is heard when the "knocker" is sounded. Test the knocker sound in the **Fire Knocker** Test via the **DIAGNOSTICS MENU** *(see Section* ***3****, Chapter* ***2****,* ***GO TO DIAGNOSTICS MENU****, Page* ***19****).*

#45 **GAME RESTART:** Set to **YES** *or* **NO**. Factory Default = **YES**. When set to **YES**, a new game may be started during any ball after the first ball is completed *(if credits allow).* Pressing the Start Button during the first ball will add additional players *(up to 4, if credits allow).* When set to **NO**, the game disables the Start Button after the first ball until the final ball is in play.

#46 **BILL VALIDATOR:** Set to **YES** *or* **NO**. Factory Default = **NO**. When set to **YES**, in ***Game Attract Mode*** an "Insert Bill Animation" is shown in the display (or just the absense of the Coin Animation). When set to **NO**, an "Insert Coin Animation" is shown. ***Not yet implemented.***

#47 **MUSIC VOLUME:** Set between **1 – 15**. Factory Default = **1**. After volume is set via Service Buttons this adjustment can be utilized to adjust the background music *(1 all the way on, 15 all the way off)* while keeping the Special Sound Effects at the same level.

#48 **BALL SAVE TIME:** Set between **0:01 – 0:15**, **AUTO** *or* **NO BALL SAVES**. Factory Default = **0:05**. When set to **NO BALL SAVES** this feature is unavailable. Set between **0:01** through **0:15** *(single increments)* for the ball to be sent back into play if the time set is not met *(per ball).* Set to **AUTO** to automatically adjust the Ball Save Timer based on the average ball time.

#49 **TIMED PLUNGER:** Set to **OFF** or **0:01 – 1:00**. Factory Default = **OFF**. The plunger will "Autoplunge" the ball *(at the time set)* when the ball is at the beginning of play, waiting for the player.

Standard Adjustments 50-63 continued on the next page.

#50 **FLIPPER BALL LAUNCH:** Set to **OFF**, **LEFT FLIPPER**, **RIGHT FLIPPER**, **EITHER FLIPPER** *or* **BOTH FLIPPERS**. Default is **OFF**. This feature allows the player to operate the Auto Ball Launch with the Flipper Button(s) depending on which setting is chosen.

#51 **COINDOOR BALL SAVER:** Set to **YES** *or* **NO**. Factory Default = **NO**. When set to **NO**, this feature is not available. When set to **YES**, this feature allows the Coin Door to be opened during game play; the ball will drain but the game will be placed "on hold". When the Coin Door is closed, the pinball will return to the Shooter Lane, and the game will resume. *Useful at locations where technicians change the cash box regularly at exact times of the day where players can be on the game.*

#52 **COMPETITION MODE:** Set to **YES** *or* **NO**. Factory Default = **NO**. When set to **NO**, this feature is not available. Set to **YES**, this feature will equalize random game features and global score values during multi-player games by predetermined competition rules set by programming. If an **Install Competition** was made via the **INSTALLS MENU** *(which automatically changes this setting to **YES**)*, and this setting was changed back to **NO**, the ***Competition Mode*** will be turned **OFF** *(cancelled)*.

#53 **CONSOLATION BALL:** Set to **YES** *or* **NO**. Factory Default = **NO**. When set to **YES**, the ***EXTRA BALL*** *(lamp insert, location varies)* will be lit on the last ball in play, if certain programming criteria is met.

#54 **FAST BOOT:** Set to **YES** *or* **NO**. Factory Default = **YES**. When set to **NO** or if you hold both **Flipper Buttons** during Power-Up, this feature is not available and will display all normal Power-Up screens. When set to **YES**, the game will not display the normal informative Power-Up screens, specifically the CPU Version screen and the Location/Game ID screen. Regardless of the setting, normal Power-Up safety checks are still performed. ***Not yet implemented.***

#55 **Q24 OPTION:** Set to **COIN METER**, **TOKEN DISPENSER** *or* **KNOCKER**. Factory Default = **COIN METER**. This Coil (Solenoid) Location is left "open" at the Factory to allow for these optional Mechanisms to be added to the game. If selecting **TOKEN DISPENSER**, Standard Adjustments 3, 14, 20 & 25 should be changed to **TOKEN**. *Call Tech. Support at 1-800-542-5377 if more information is required on this option.*

#56 **TICKET DISPENSER:** Set to **YES** *or* **NO**. Factory Default = **NO**. *This adjustment is required only for games which have an optional Deltronics (DL-1275-2 PCB Style, SPI Part Nr. 515-7275-00) Ticket Dispenser installed. Unique CPU Sound Bd. Dip Switch Setting required, changes the Default to **YES**.*

#57 **PLAYER COMPETITION:** Set to **YES** *or* **NO**. Factory Default = **YES**. ***Competition Mode*** unrandomizes feature events, and standardizes game play and rule sets *(varies from game to game)* for fair competitions. With at least one credit posted, *or* with the game set for 'FREE PLAY', during the game-over Attract Mode, press the **Left Flipper Button** and hold it in for approximately one second. The following message will appear on the display for approximately 10 seconds: '**COMPETITION MODE READY ... PRESS START NOW**'. If a game is started *(either by pressing the 'START' button for a regular game, or by pressing the 'TOURNAMENT START' button for a tournament game)* while this message appears on the display, then competition mode will be enabled for all players during the game. General rules are covered in the Instruction Card. Other *Hints and/or Rules* can be made known on this game either visually *(the Dot Display or Flashing Light Inserts) or* can be audible.

#58 **TEAM SCORES:** Set to **YES** *or* **NO**. Factory Default = **NO**. Set to **YES**, then Team Play will be made available. ***Team Play only works in a 4-Player Game.*** The totals for Players 1 / 3 (Team 1) & Players 2 / 4 (Team 2) are then displayed individually ***as well as*** the combined score for **BOTH TEAMS** to enable **Team Play (Doubles)**. *See Section **2**, Chapter **1**, **Game Operation & Features**, for non-adjustable Features.*

#59 **LOCATION ID:** Set between **0** to **9999**. Factory Default = **0**. This adjustment allows the operator to assign a location identification number to the audit print-out sheet. *(Will not be affected by a Factory Reset.)*

#60 **GAME ID:** Set between **0** to **9999**. Factory Default = **0**. This adjustment allows the operator to assign a game identification number to the audit print-out sheet. *(Will not be affected by a Factory Reset.)*

#61 **TIME FORMAT:** Set to **12-HOUR** *or* **24-HOUR**. Factory Default = **12-HOUR**. This adjustments determines how the time is displayed. *Time used for Tournament and Data Dumps where a time stamp is required.*

#62 **COIN INPUT DELAY:** Set between **30** to **60** *or* **OFF**. Factory Default = **30**. This adjustment creates a short time delay between the moment the coin is inserted into the **Coin Slot** to the moment the CPU/Sound PCB registers the coin *(30 = approxiamately 1/2 second).*

#63 **LOST BALL RECOVERY:** Set to **YES** *or* **NO**. Factory Default = **NO**. Set to **YES**, at the start of the 5th consecutive ball search *(with no scoring between searches),* the game will consider any balls in play to be permanently lost and will attempt to recover from this situation by serving a new ball into play from the ball trough. Set to **NO** *(to suppress this adjustment behavior)* for the game to perform the "ball search" indefinitely until the lost balls are found or replaced.

STANDARD ADJUSTMENTS [#1 – #63] ▼

Nr.	STANDARD ADJUSTMENT NAME	USA DEFAULT	YOUR SETTING
1	REPLAY TYPE	AUTO	
2	‡ REPLAY PERCENTAGE	10%	
3	‡ REPLAY AWARD	CREDIT	
4	‡ REPLAY LEVELS	1	
5	‡ AUTO REPLAY START	20,000,000	
6	‡ DYNAMIC REPLAY START	60,000,000	
7	‡ REPLAY LEVEL #1	15,000,000	
8	‡ REPLAY LEVEL #2	30,000,000	
9	‡ REPLAY LEVEL #3	45,000,000	
10	‡ REPLAY LEVEL #4	60,000,000	
11	‡ REPLAY BOOST	YES	
12	SPECIAL LIMIT	1	
13	‡ SPECIAL PERCENTAGE	10%	
14	SPECIAL AWARD	CREDIT	
15	FREE GAME LIMIT	5	
16	EXTRA BALL LIMIT	5	
17	‡ EXTRA BALL PERCENTAGE	25%	
18	GAME PRICING	USA 5	
19	MATCH PERCENTAGE	9%	
20	MATCH AWARD	CREDIT	
21	BALLS PER GAME	3	
22	TILT WARNINGS	2	
23	CREDIT LIMIT	30	
24	ALLOW HIGH SCORES	YES	
25	HIGH SCORE AWARD	CREDIT	
26	GRAND CHAMPION AWARDS	1	
27	HIGH SCORE #1 AWARDS	1	
28	HIGH SCORE #2 AWARDS	0	
29	HIGH SCORE #3 AWARDS	0	
30	HIGH SCORE #4 AWARDS	0	
31	GRAND CHAMPION SCORE	75,000,000	

Nr.	STANDARD ADJUSTMENT NAME	USA DEFAULT	YOUR SETTING
32	HIGH SCORE #1	55,000,000	
33	HIGH SCORE #2	40,000,000	
34	HIGH SCORE #3	30,000,000	
35	HIGH SCORE #4	25,000,000	
36	HSTD INITIALS	3 INITIALS	
37	HSTD RESET COUNT	2000	
38	FREE PLAY	NO	
39	LANGUAGE	ENGLISH	
40	PLAYER LANGUAGE SELECT	YES	
41	CUSTOM MESSAGE	ON	
42	FLASH LAMP POWER	NORMAL	
43	COIL PULSE POWER	NORMAL	
44	KNOCKER VOLUME	NORMAL	
45	GAME RESTART	YES	
46	BILL VALIDATOR	NO	
47	MUSIC VOLUME	1	
48	BALL SAVE TIME	0:05	
49	TIMED PLUNGER	OFF	
50	FLIPPER BALL LAUNCH	OFF	
51	COINDOOR BALL SAVER	NO	
52	COMPETITION MODE	NO	
53	CONSOLATION BALL	YES	
54	FAST BOOT	YES	
55	Q24 OPTION	COIN METER	
56	TICKET DISPENSER	NO	
57	PLAYER COMPETITION	YES	
58	TEAM SCORES	NO	
59	LOCATION ID	0	
60	GAME ID	0	
61	TIME FORMAT	12-HOUR	
62	COIN INPUT DELAY	30	
63	LOST BALL RECOVERY	YES	

Factory Defaults Settings are subject to change during production *(especially Standard Adjustments 2, 4, 5, 13, 16-17, 19, 31-35 & 47).*
‡ Not all Standard Adjustments are shown. Depending on the setting (whether Factory Default or if changed by the operator), associated adjustments do not appear, if not required. ***Note:*** *If* ***Game Dip Switch*** *other than USA is installed, different Defaults will appear.*

Feature Adjustments [#1 – #26]

To initiate, from the **ADJUSTMENTS MENU**, select the "F.G." *Icon*. The Dot Matrix Display will indicate the *adjustment number (in this group)*, *adjust. name*, *adjust. setting* and *comment line.* The current adjustment will remain on the display until the next adjustment is viewed or when this sub-menu is exited.

#1 **ADULT CONTENT ENABLED :** Set to **ADULT**, **MODERATE** *or* **FAMILY**.
Factory Default = **ADULT**. Controls whether the game will make use of more mature content.
Also reference Instruction Sheet ***756-5036-93*** .
ADULT : non-censored! Use of mild & harsh swear words.
MODERATE : partially-censored.
FAMILY : censored! no offensive sounds and no swearing.

#2 **POPS AT BALL START :** Set between **0 – 6**. Factory Default = **1**. *Determines how this feature is started and played.*

#3 **PINBALL SPELLOUT DIFFICULTY :** Set to **EXTRA EASY**, **EASY**, **MEDIUM**, **HARD** *or* **EXTRA HARD**.
Factory Default = **MEDIUM**. *Determines how this feature is started and played.*

#4 **MINI CHRIS LETTERS SPOTTED :** Set between **0 – 4**. Factory Default = **0**.
Determines how many letters in ***C-H-R-I****-S are lit at Stewie Pinball Game Start.*

#5 **MINI MEG LETTERS SPOTTED :** Set between **0 – 2**. Factory Default = **0**.
Determines how many letters in ***M-E****-G are lit at Stewie Pinball Game Start.*

#6 **MINI PETER LETTERS SPOTTED :** Set between **0 – 4**. Factory Default = **0**.
Determines how many letters in ***P-E-T-E****-R are lit at Stewie Pinball Game Start.*

#7 **MINI LOIS LETTERS SPOTTED :** Set between **0 – 3**. Factory Default = **0**.
Determines how many letters in ***L-O-I****-S are lit at Stewie Pinball Game Start.*

#8 **MINI BRIAN LETTERS SPOTTED :** Set between **0 – 4**. Factory Default = **0**.
Determines how many letters in ***B-R-I-A****-N are lit at Stewie Pinball Game Start.*

#9 **MINI PLAYFIELD MIN. PLAY TIME :** Set between **10 – 20**. Factory Default = **15**.
Determines the starting minimum count-down timer (in seconds) "Shoot Again" remains lit (allowing the ball to be returned to play after a ball drain between the mini flippers).

#10 **MINI PLAYFIELD MAX PLAY TIME :** Set between **25 – 60**. Factory Default = **30**.
Determines the maximum count-down timer (in seconds) "Shoot Again" a player can have to remain lit (allowing the ball to be returned to play after a ball drain between the mini flippers).

#11 **MINI PF TIME STEWIE INCREMENT :** Set between **1 – 3**. Factory Default = **1**.
Determines the increment in seconds the maximum play time gets increased when this feature is collected.

#12 **LETTERS PER MINI PF SHOT :** Set between **1 – 5**. Factory Default = **2**.
Determines how many letters in each family name is lit when the switch is closed for the particular shot.
Left Orbit : **BR**IAN Left Stand-Up Target : **ME**G Center Stand-Up Target : **PE**TER
Ramp : **LO**IS Right Orbit : **CH**RIS

#13 **MINI PLAYFIELD ENDING :** Set to **SUDDEN DEATH**, **SUDDEN DEATH + TIMER** *or* **INSTANT**. Factory Default = **SUDDEN DEATH**.
Determines how Stewie Pinball play ends when the display timer runs out (Shoot Again now unlit).
SUDDEN DEATH = Flippers die when ball drains *(play continues as long as the ball does not drain).*
SUDDEN DEATH + TIMER = Flippers die when audible timer reaches 0.
(audible timer starts when the display timer ends)
INSTANT = Flippers die instantly when the display timer reaches 0.

#14 **FART MULTIBALL DIFFICULTY :** Set to **EXTRA EASY**, **EASY**, **MEDIUM**, **HARD** *or* **EXTRA HARD**.
Factory Default = **MEDIUM**. *Determines how this feature is started and played.*

#15 **CHRIS DIFFICULTY :** Set to **EXTRA EASY**, **EASY**, **MEDIUM**, **HARD** *or* **EXTRA HARD**.
Factory Default = **MEDIUM**. *Determines how this feature is started and played.*

#16 **SHOW MINI FLIPPERS :** Set to **YES** *or* **NO**. Factory Default = **YES**. *Determines if the mini flippers are energized 3 times to get the player's attention to look up the first time Stewie Pinball is started.*

#17 **POPS CARRYOVER :** Set to **YES** *or* **NO**. Factory Default = **NO**. *Determines if this feature stays lit on the next ball if feature wasn't completed before the play in play ended.*

#18 **TV DIFFICULTY :** Set to **EXTRA EASY**, **EASY**, **MEDIUM**, **HARD** *or* **EXTRA HARD**.
Factory Default = **HARD**. *Determines how this feature is started and played.*

Feature Adjustments 19-26 continued on the next page.

#19 **LEFT RAMP DIFFICULTY :** Set to **EXTRA EASY**, **EASY**, **MEDIUM**, **HARD** *or* **EXTRA HARD**. Factory Default = **MEDIUM**. *Determines how this feature is started and played.*

#20 **BALL SAVER POST TIME :** Set between **5 – 20**. Factory Default = **9**. *Determines how many seconds the Ball Saver Post remains in the up position when activated (hitting the 1-Bank Drop Target when the Death Lamp is lit).*

#21 **RAISE DEATH MULTIBALLS :** Set between **1 – 10** *or* **OFF**. Factory Default = **3**. *Set the maximum number for this feature. Determines how this feature is started and played.*

#22 **DISABLE BALL SAVER POST :** Set to **YES** *or* **NO**. Factory Default = **NO**. Set to **YES** if the Ball Saver Post coil and/or switches are awaiting repair or replacement.

#23 **DISABLE 4-BANK :** Set to **YES** *or* **NO**. Factory Default = **NO**. Set to **YES** if the 4-Bank Drop Target coil and/or PCB switches are awaiting repair or replacement.

#24 **DISABLE 1-BANK :** Set to **YES** *or* **NO**. Factory Default = **NO**. Set to **YES** if the 1-Bank Drop Target coil and/or PCB switch are awaiting repair or replacement.

#25 **DISABLE MINI PLAYFIELD :** Set to **YES** *or* **NO**. Factory Default = **NO**. Disable the playfield manually. Set to **YES** if the left flipper, right flipper, shooter coils and/or PCB switches *(ramp OPTOs or piezo stand-ups)* are awaiting repair *or* replacement. *In doing so, when all letters in **P-I-N-B-A-L-L** are spelled and the TV hole shot is made, the player will be awarded 1,000,000 points for the 1st occurence (subject to change) and an incremental increase of 250,000 (subject to change) with each subsequent "play" of Stewie Pinball.*

#26 **SMART MINIPF ERROR CHECK :** Set to **YES** *or* **NO**. Factory Default = **YES**. Disables the playfield automatically (see Feature Adjustment 25). Set to **NO** if you >>**do not want**<< the game to **AUTOMATICALLY** check if the left flipper, right flipper, shooter coils and/or PCB switches *(ramp and orbit OPTOs or piezo stand-ups)* are malfunctioning *or* not.

Note: *The game may determine a long duration of inactivity as a malfunction.* If the game had automatically turned off the mini-playfield, and after all switches and coils were determined to be functioning normally in Switch and Coil Tests, turn this adjustment to **NO**.

FEATURE ADJUSTMENTS [#1 – #26] ▼

Nr.	FEATURE ADJUSTMENT NAME	USA DEFAULT	YOUR SETTING
1	ADULT CONTENT ENABLED	ADULT	
2	POPS AT BALL START	1	
3	PINBALL SPELLOUT DIFFICULTY	MEDIUM	
4	MINI CHRIS LETTERS SPOTTED	0	
5	MINI MEG LETTERS SPOTTED	0	
6	MINI PETER LETTERS SPOTTED	0	
7	MINI LOIS LETTERS SPOTTED	0	
8	MINI BRIAN LETTERS SPOTTED	0	
9	MINI PLAYFIELD MIN. PLAY TIME	15	
10	MINI PLAYFIELD MAX PLAY TIME	30	
11	MINI PF TIME STEWIE INCREMENT	1	
12	LETTERS PER MINI PF SHOT	2	
13	MINI PLAYFIELD ENDING	SDN DEATH	

Nr.	FEATURE ADJUSTMENT NAME	USA DEFAULT	YOUR SETTING
14	FART MULTIBALL DIFFICULTY	MEDIUM	
15	CHRIS DIFFICULTY	MEDIUM	
16	SHOW MINI FLIPPERS	YES	
17	POPS CARRYOVER	NO	
18	TV DIFFICULTY	HARD	
19	LEFT RAMP DIFFICULTY	MEDIUM	
20	BALL SAVER POST TIME	9	
21	RAISE DEATH MULTIBALLS	3	
22	DISABLE BALL SAVER POST	NO	
23	DISABLE 4-BANK	NO	
24	DISABLE 1-BANK	NO	
25	DISABLE MINI PLAYFIELD	NO	
26	SMART MINIPF ERROR CHECK	YES	

To initiate, from the **MAIN MENU**, select the "UTIL" *Icon*. The **UTILITIES MENU** provides ways to quickly and easily customize your game with **Installs** *(pre-sets for game Standard & Feature Adjustments),* set-up a **Custom Message** *(short-cut to Standard Adjustment **41**, **Custom Message**)*, set-up **Custom Pricing** *(short-cut to Standard Adjustment **18**, to the **Custom Pricing Sub-Menu**),* set-up the **Date and Time** *(required if the date and time is needed to be accurate for data dumps and for tournaments),* reset certain particular game data *or* perform a complete **Factory Reset** and to download game data, update or backup game code in the **USB MENU**.

All **UTILITIES**, **INSTALLS**, **RESETS MENU** and **USB MENU** *Icons* and there usages are explained throughout this chapter in the same order as seen in the Dot Matrix Display. ***NOTE:*** Depending on Game Type, Version, selections made, Dip Switch settings, location and/or areas, some *Icons* may appear non-functional *or* may not appear at all. ***Installs (Adjustments)***, ***Icons*** *and/or* ***functions***, ***order*** *and* ***operation are subject to change***. ***If in doubt use the Factory Default Settings*** *(review **Install Factory** on the next page).*

In displays where changes can be made *or* to perform a function, use the **GREEN Button** to go **[BACK]**, exit *or* escape, the **RED Buttons** to **[< / –]** MOVE BACK / LEFT **/ [+ / >]** MOVE FORWARD / RIGHT to view the next audit in the group, and the **BLACK Button** to **[SELECT]** the sub-menus.

Go To Installs Menu

To initiate, from the **UTILITIES MENU**, select the "INST" *Icon*. The **INSTALLS MENU** provides **13** **Installs** to vary **Game Play Difficulty** *(set with Feature Adjustments) or* **Game Play Type** and **Install Factory** *(restores all adjustments to Factory Defaults)*.

For **detailed customization** *or* to check current **Adjustments Defaults** *(either changed by YOU in the Adjustments Menu or by this* **INSTALLS MENU** *or for Factory Default Settings), see Section **3**, Chapter **4**, **GO TO ADJUSTMENTS MENU***. After completing one or more of the **Installs** in this chapter, go back to the **ADJUSTMENTS MENU** to see which **Standard** *and/or* **Feature Adjustments** have changed *(Feature Adjustments and/or settings are subject to change during production, and may differ than what is described in the tables at the end of this chapter). The Dot Display will indicate if a setting is a Factory Default or not. If the settings are not to your liking, perform **one** of the following:*

1.: **Manually** change the **Standard & Feature Adjustments** Settings *(perform this task in the **ADJUSTMENTS MENU**, see Section **3**, Chapter **4**, **GO TO ADJUSTMENTS MENU**).*

2.: **Install Factory** *(see the last install)* on how to reset all of the **Standard & Feature Adjustments** back to the *Factory Default Settings*.

Multiple **Installs can be set** to vary game play; however, for **Installs** that have *one or more* Adjustments in common, the ***last*** "Install" selected & *activated*, will **supersede** any previously changed Adjustment(s) from any prior **Installs**. Any adjustments which you changed and are not affected by the Install will remain as set.

For example, if you want a **5-BALL Game** *set to* **EXTRA EASY**: Select and *activate* the "5BAL" *Icon* first (which will typically change any ***Feature*** Difficulty Adjustments to **HARD**), then select & *activate* the "X.EZ" *Icon* to **change back** the Difficulty Adjustments to **EXTRA EASY**. However, if the "X.EZ" *Icon* was selected & *activated* first, then the "5BAL" *Icon* was selected & *activated*, the game will be set to a **5-BALL Game** *set to* **HARD**.

Remember, use the **GREEN Button** to go **[BACK]**, exit *or* escape and the **BLACK Button** to **[SELECT]** to INSTALL your new setting(s).

INSTALLS MENU continued on the next page.

Install Extra Easy, Easy, Medium (Normal or Factory Settings), Hard or Extra Hard

To initiate, from the **INSTALLS MENU**, select one of the "X.EZ," "EASY," "FACT," "HARD," *or* "X.HD" *Icons*. The Dot Matrix Display will indicate the **INSTALL EXTRA EASY**, **EASY**, **MEDIUM**, **HARD** *or* **EXTRA HARD** depending on choice. Follow the on-screen prompts to perform the **Install**. Set the **Game Play Difficulty** level.

Install 3-Ball

To initiate, from the **INSTALLS MENU**, select the "3BAL" *Icon*. The Dot Matrix Display will indicate the **INSTALL 3-BALL**. Follow the on-screen prompts to perform the **Install**.
Set the **Game Play Type** to 3 Balls per game *(Factory Default is 3 Balls per game, not including extra's...).*

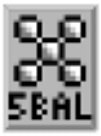

Install 5-Ball

To initiate, from the **INSTALLS MENU**, select the "5BAL" *Icon*. The Dot Matrix Display will indicate the **INSTALL 5-BALL**. Follow the on-screen prompts to perform the **Install**.
Set the **Game Play Type** to 5 Balls per game *(not including extra balls earned by the player, if any).*

Install Competition

To initiate, from the **INSTALLS MENU**, select the "COMP" *Icon*. The Dot Matrix Display will indicate the **INSTALL COMPETITION**. Follow the on-screen prompts to perform the **Install**.
Set the **Game Play Type** to "Tournament" Rules. *Programming varies and is subject to change.*

Install Director's Cut

To initiate, from the **INSTALLS MENU**, select the "DCUT" *Icon*. The Dot Matrix Display will indicate the **INSTALL DIRECTOR'S CUT**. Follow the on-screen prompts to perform the **Install**.
Set the **Game Play Type** to programmer's choice. *Programming varies and is subject to change.*

Install Home Play

To initiate, from the **INSTALLS MENU**, select the "HOME" *Icon*. The Dot Matrix Display will indicate the **INSTALL HOME PLAY**. Follow the on-screen prompts to perform the **Install**.
Set the **Game Play Type** to "Home" Rules. *Programming varies and is subject to change.*

Install Novelty

To initiate, from the **INSTALLS MENU**, select the "NOV" *Icon*. The Dot Matrix Display will indicate the **INSTALL NOVELTY**. Follow the on-screen prompts to perform the **Install**.
********** This setting is recommended where local laws restrict certain game features. **********
Set the **Game Play Type** to "Restricted" Rules. *Programming varies and is subject to change.*

Install Add-A-Ball

To initiate, from the **INSTALLS MENU**, select the "A.A.B." *Icon*. The Dot Matrix Display will indicate the **INSTALL ADD-A-BALL**. Follow the on-screen prompts to perform the **Install**.
********** This setting is recommended where local laws restrict certain game features. **********
Set the **Game Play Type** to "Restricted" Rules. *Programming varies and is subject to change.*

Install Factory

To initiate, from the **INSTALLS MENU**, select the "FACT" *Icon*. The Dot Matrix Display will indicate the **INSTALL FACTORY**. Follow the on-screen prompts to perform the **Install**. ⚠ **CAUTION!** All **Standard** *and* **Feature Adjustments** which were changed in the **INSTALLS MENU** *or* **ADJUSTMENTS MENU** are returned to the **Factory Defaults** *(as indicated in the Dot Display in the **ADJUSTMENTS MENU**). Note: To perform a complete **Factory Reset**, **GO TO THE RESETS MENU**. Escape back to the **UTILITIES MENU**, select the "RESET" Icon, then select the "FACT" Icon in the **RESETS MENU** (review the end of this chapter, Page **40**, **Reset Factory Settings**).*

INSTALLS MENU continued on the next page.

Overview of Factory Defaults which change with a Particular Install

STANDARD ADJUSTMENTS (ADJUSTMENTS NOT AFFECTED ARE NOT SHOWN) ▼

Nr.	STANDARD ADJUSTMENT NAME	INSTALL FACTORY	INSTALL MEDIUM *	INSTALL 3-BALL	INSTALL 5-BALL	INSTALL COMPETI-TION	INSTALL DIRECTOR'S CUT *	INSTALL HOME PLAY *	INSTALL NOVELTY	INSTALL ADD-A-BALL
1	REPLAY TYPE	AUTO		AUTO	AUTO	AUTO			NONE	AUTO
2	REPLAY PERCENTAGE	10%		10%	10%	10%				10%
3	REPLAY AWARD	CREDIT		CREDIT	CREDIT	CREDIT				EX. BALL
4	REPLAY LEVELS	1		1	1	1				1
5	AUTO REPLAY START	20,000,000		20,000,000	20,000,000	20,000,000				20,000,000
6	DYNAMIC REPLAY START	60,000,000								
7	REPLAY LEVEL #1	15,000,000								
8	REPLAY LEVEL #2	30,000,000								
9	REPLAY LEVEL #3	45,000,000								
10	REPLAY LEVEL #4	60,000,000								
11	REPLAY BOOST	YES		YES	YES	YES				YES
12	SPECIAL LIMIT	1		1	1	1			1	1
13	SPECIAL PERCENTAGE	10%		10%	10%	10%			10%	10%
14	SPECIAL AWARD	CREDIT		CREDIT	CREDIT	CREDIT			POINTS	EX. BALL
15	FREE GAME LIMIT	5		5	5	5			NO FREE...	NO FREE...
16	EXTRA BALL LIMIT	5		5	5	5			NO EXTRA	9
17	EX. BALL PERCENTAGE	25%		25%	25%	25%			25%	25%
18	GAME PRICING	USA 5		USA 5	USA 5	USA 5			USA 5	USA 5
19	MATCH PERCENTAGE	9%		9%	9%	9%			OFF	OFF
20	MATCH AWARD	CREDIT		CREDIT	CREDIT	CREDIT			CREDIT	CREDIT
21	BALLS PER GAME	3		3	5	3			3	3
22	TILT WARNINGS	2		2	2	2			2	2
23	CREDIT LIMIT	30		30	30	30			30	30
24	ALLOW HIGH SCORES	YES		YES	YES	YES			YES	YES
25	HIGH SCORE AWARD	CREDIT		CREDIT	CREDIT	CREDIT			CREDIT	CREDIT
26	GRND CHMPN AWARDS	1		1	1	1			0	0
27	HIGH SCORE #1 AWARDS	1		1	1	1			0	0
28	HIGH SCORE #2 AWARDS	0		0	0	0			0	0
29	HIGH SCORE #3 AWARDS	0		0	0	0			0	0
30	HIGH SCORE #4 AWARDS	0		0	0	0			0	0
31	GRND CHMPN SCORE	75,000,000		75,000,000	75,000,000	75,000,000			75,000,000	75,000,000
32	HIGH SCORE #1	55,000,000		55,000,000	55,000,000	55,000,000			55,000,000	55,000,000
33	HIGH SCORE #2	40,000,000		40,000,000	40,000,000	40,000,000			40,000,000	40,000,000
34	HIGH SCORE #3	30,000,000		30,000,000	30,000,000	30,000,000			30,000,000	30,000,000
35	HIGH SCORE #4	25,000,000		25,000,000	25,000,000	25,000,000			25,000,000	25,000,000
36	HSTD INITIALS	3 INITIALS		3 INITIALS	3 INITIALS	3 INITIALS			3 INITIALS	3 INITIALS
37	HSTD RESET COUNT	2000		2000	2000	2000			2000	2000
38	FREE PLAY	NO		NO	NO	YES			NO	NO
40	PLAYER LANG. SELECT	YES		YES	YES	NO			YES	YES
45	GAME RESTART	YES		YES	YES	NO			YES	YES
48	BALL SAVE TIME	0:05		0:05	0:05	0:05			0:05	0:05
49	TIMED PLUNGER	OFF		OFF	OFF	OFF			OFF	OFF
50	FLIPPER BALL LAUNCH	OFF		OFF	OFF	OFF			OFF	OFF
51	COINDOOR BALL SAVER	NO		NO	NO	YES			NO	NO
52	COMPETITION MODE	NO		NO	NO	YES			NO	NO
53	CONSOLATION BALL	YES		YES	YES	YES			YES	YES
57	PLAYER COMPETITION	YES		YES	YES	YES			YES	YES
58	TEAM SCORES	NO		NO	NO	NO			NO	NO
63	LOST BALL RECOVERY	YES		YES	YES	NO			YES	YES

* **Note:** *Currently, no Standard Adjustments are changed if* ***Install EXTRA EASY***, ***... EASY***, ***MEDIUM***, ***HARD***, ***EXTRA HARD***, ***Install HOME PLAY*** *or* ***Install DIRECTOR'S CUT*** *Is performed.*

SOME INSTALLS MAY CHANGE ADJUSTMENTS NOT NOTED ABOVE WITH FUTURE UPGRADES. YOU CAN ALSO REVIEW OR CHANGE ANY ADJUSTMENT IN THE ***ADJUSTMENTS MENU*** *(SEE SECTION* ***3****, CHAPTER* ***4****). ADJUSTMENTS WHICH WERE CHANGED* ***ARE NOT NOTED*** *WITH* ***FACTORY DEFAULT*** *ON THE BOTTOM LINE OF THE DOT DISPLAY. THE SETTINGS HIGHLIGHTED ABOVE WILL OVERRIDE ANY MANUAL CHANGES MADE IN THE ADJUSTMENTS MENU.*

STANDARD ADJUSTMENTS *NOT* LISTED ABOVE WHICH NEVER CHANGE WITH ANY INSTALL : ***39, 41–44, 46–47, 54–56 & 59–62***

INSTALLS MENU continued on the next page.

Overview of Factory Defaults which change with a Particular Install

FEATURE ADJUSTMENTS (ADJUSTMENTS NOT AFFECTED ARE NOT SHOWN) ▼

Nr.	FEATURE ADJUSTMENT NAME	INSTALL FACTORY	INSTALL EXTRA EASY	INSTALL EASY	INSTALL MEDIUM *or* 3-BALL	INSTALL HARD	INSTALL EXTRA HARD	INSTALL 5-BALL	INSTALL COMPETI-TION	INSTALL DIRECTOR'S CUT	INSTALL HOME PLAY *
2	POPS AT BALL START	1			1						
3	PINBALL SPELLOUT DIFFICULTY	MEDIUM	EXTRA EASY	EASY	MEDIUM	HARD	EXTRA HARD	HARD		MEDIUM	
4	MINI (PLAYFIELD) CHRIS LETTERS SPOTTED	0			0						
5	MINI (PLAYFIELD) MEG LETTERS SPOTTED	0			0						
6	MINI (PLAYFIELD) PETER LETTERS SPOTTED	0			0						
7	MINI (PLAYFIELD) LOIS LETTERS SPOTTED	0			0						
8	MINI (PLAYFIELD) BRIAN LETTERS SPOTTED	0			0						
9	MINI PLAYFIELD MIN. PLAY TIME	15			15				▲ SEE INSTALL HARD ▼		▲ SEE INSTALL MEDIUM ▼
10	MINI PLAYFIELD MAX PLAY TIME	30			30						
11	MINI PLAYFIELD TIME STEWIE INCREMENT	1			1						
12	LETTERS PER MINI PLAYFIELD SHOT	2			2						
14	FART MULTIBALL DIFFICULTY	MEDIUM	EXTRA EASY	EASY	MEDIUM	HARD	EXTRA HARD			MEDIUM	
15	CHRIS DIFFICULTY	MEDIUM	EXTRA EASY	EASY	MEDIUM	HARD	EXTRA HARD			MEDIUM	
17	POPS CARRYOVER	NO			NO						
18	TV DIFFICULTY	HARD	EASY	MEDIUM	HARD	EXTRA HARD	EXTRA HARD			HARD	
19	LEFT RAMP DIFFICULTY	MEDIUM	EXTRA EASY	EASY	MEDIUM	HARD	EXTRA HARD				
20	BALL SAVER POST TIME	9			9						
21	RAISE DEATH MULTIBALLS	3			3						

* **Note:** *Currently, no Feature Adjustments are changed if* ***Install COMPETITION***, ***Install HOME PLAY***, ***Install NOVELTY*** *or* ***Install ADD-A-BALL*** *is performed.*

SOME INSTALLS MAY CHANGE ADJUSTMENTS NOT NOTED ABOVE WITH FUTURE UPGRADES. YOU CAN ALSO REVIEW OR CHANGE ANY ADJUSTMENT IN THE ***ADJUSTMENTS MENU*** *(SEE SECTION* ***3****, CHAPTER* ***4****). ADJUSTMENTS WHICH WERE CHANGED* ***ARE NOT NOTED*** *WITH* ***FACTORY DEFAULT*** *ON THE BOTTOM LINE OF THE DOT DISPLAY. THE SETTINGS HIGHLIGHTED ABOVE WILL OVERRIDE ANY MANUAL CHANGES MADE IN THE ADJUSTMENTS MENU.*

FEATURE ADJUSTMENTS NOT LISTED ABOVE WHICH NEVER CHANGE WITH ANY INSTALL : ***1, 13, 16, 22 – 25***

Enter Custom Message

To initiate, from the **UTILITIES MENU**, select the "ABCD CUST MSG" *Icon*. The **SET CUSTOM MESSAGE** *(a short-cut for Standard Adjustment **41**, **Custom Message**)* provides an opportunity to have a text message appear in the the **Attract Mode**. Follow the on-screen prompts to complete [END].

Remember, use the **GREEN Button** to go **[BACK]**, exit *or* escape, the **RED Buttons** to **[< / –]** MOVE LEFT / CHOOSE NEXT **[+ / >]** MOVE RIGHT / CHOOSE PREVIOUS, and the **BLACK Button** to **[SELECT]** *as 'OK'.*

Set Custom Pricing

To initiate, from the **UTILITIES MENU**, select the "PRIC" *Icon*. The **CUSTOM PRICING MENU** *(a short-cut for Standard Adjustment **18**, **Game Pricing**, and setting selected is **CUSTOM**)* provides an opportunity to set **Custom Pricing**.

Note ! MONETARY AMOUNT MUST BE SELECTED FIRST! Press **[BACK]** to – DECREASE *or* **[SELECT]** to + INCREASE the **[< $ >] monetary amount** *(e.g. look at the right side of the display from **$0.25** to **$0.50**).* Press **[< / –]** to – DECREASE *or* **[+ / >]** to + INCREASE the **credit quantity** *(e.g. look at the left side of the display from **0 CREDITS AT:** to **1 CREDIT AT:**).*

IF EXAMPLE CUSTOM PRICING SETTING DESIRED IS :
1 Play for **$0.50**, **3** Plays for **$1.00** and **7** Plays for **$2.00**
THEN YOU WILL NEED TO PERFORM THE FOLLOWING :

REMINDER
In these menus:
Press [BACK] to – DECREASE [< $]
Press [SELECT] to + INCREASE [$ >]

Step 1 The starting display appears as below if no prior **Custom Pricing** was installed.

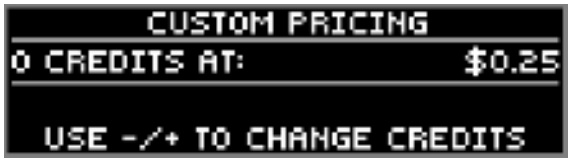

Step 2 Press **[SELECT]** to + INCREASE to **$0.50**. Press **[+ / >]** to + INCREASE to **1 CREDIT AT:**

Step 3 Press **[SELECT]** to + INCREASE to **$1.00**. Press **[+ / >]** to + INCREASE to **2 CREDITS AT:**

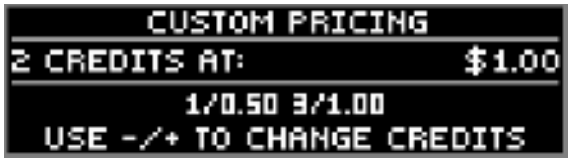

Step 4 Press **[SELECT]** to + INCREASE to **$2.00**. Press **[+ / >]** to + INCREASE to **4 CREDITS AT:**

Step 5 Press **[SELECT]** to + INCREASE the amount once *(example = $2.25).* Press **[< / –]** once ...

*... or press **[+ / >]** eleven times until INSTALL appears.*

Step 6 Press **[SELECT]** to INSTALL. Press **[< / –]** / **[+ / >]** *or* **[BACK]** to edit.

Step 7 Press **[SELECT]**, press **[BACK]** twice to exit the **SERVICE MENU** with your **Custom Pricing** installed.

To correct or make new changes, reenter, which brings you to **Step 6**. Press **[BACK]** repeatedly until the monetary amount shown is the desired amount and then continue following the above steps with your new or corrected settings. *If you are still having difficulty or if you have any questions, please call Technical Support 800-542-5377 or 708-345-7700, option 1.*

Set Date / Time

To initiate, from the **UTILITIES MENU**, select the "TIME" *Icon*. The **SET TIME MENU** appears with the **MONTH** flashing. Setting the date and time is required for 'Data Dumps' and Tournament Start and End Dates. If the setting of Standard Adjustment **61**, **Time Format**, is set to **12-HOUR** *(Factory Default)* the time will be expressed in the **AM / PM format**. If Standard Adjustment **61**, **Time Format**, is set to **24-HOUR** the time will be expressed in the **24-hour format**.

Go To Resets Menu

To initiate, from the **UTILITIES MENU**, select the "RESET" *Icon*. The **RESETS MENU** provides six (6) functions to reset *only the* **Coin Audits**, reset *only the* **Game Audits**, reset *only the* **Grand Champion Score**, reset *only the* **High Score(s)**, reset *only the* paid **Credits** *(includes Service Credits) or* to reset ***ALL DATA*** back to the **Factory Default Settings**.

Reset Coin Audits

To initiate, from the **RESET MENU**, select the "COIN" *Icon.* ⚠ **ONLY** the **Coin Audits** [Earnings Audits **5–12**], will be reset to zero (0), *Factory Default Settings.* Follow the on-screen prompts to perform the **Reset**.

Reset Game Audits

To initiate, from the **RESET MENU**, select the "AUD" *Icon.* ⚠ **ONLY** the **Game Audits** [Earnings Audits **1–4**, Standard Audits **1–59** and Feature Audits **1–XX***], will be reset to zero (0), *Factory Default Settings.* Follow the on-screen prompts to perform the **Reset**. **varies per game title.*

Reset Grand Champion (Score)

To initiate, from the **RESET MENU**, select the "GC" *Icon* ⚠ **ONLY** the **Grand Champion Score** [adjustable via Standard Adjustment **31**], will be reset to *Factory Default Setting.* Follow the on-screen prompts to perform the **Reset**.

Reset High Scores

To initiate, from the **RESET MENU**, select the "HSTD" *Icon.* ⚠ **ONLY** the **High Score(s)** [adjustable via Standard Adjustments **32–35**], will be reset to *Factory Default Setting(s).* Follow the on-screen prompts to perform the **Reset**. ***Note:*** *High Scores (but not Grand Champion Score) are reset automatically every 2,000 games (Factory Default Setting) [adjustable via Standard Adjustment **37**, **HSTD Reset Count**].*

Reset Credits

To initiate, from the **RESET MENU**, select the "CRED" *Icon.* ⚠ **ONLY** the **Credits** *(includes Service Credits)* [adjustable via Standard Adjustment **23**, **Credit Limit**], will be reset to *zero (0), Factory Default Settings.* Follow the on-screen prompts to perform the **Reset**.

Reset Factory Settings

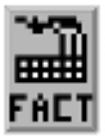

To initiate, from the **RESET MENU**, select the "FACT" *Icon.* ⚠ **ALL GAME DATA IS RESET!** *(with the exception of Earnings Audit **13**, Software Meter).* ***NOTE:*** *IF YOU HAD **SET-UP CUSTOM PRICING** OR HAD CHANGED ANY ADJUSTMENTS OR **PERFORMED INSTALLS**, IT IS SUGGESTED TO WRITE DOWN YOUR CHANGES PRIOR TO THE FACTORY RESET.* Follow the on-screen prompts to perform the **Reset**.

Go To USB Menu

To initiate, from the **UTILITIES MENU**, select the "USB" *Icon*. The **USB MENU** provides three (3) functions to download game data, update your game code or backup your code onto a USB Memory Stick. *Review the inside cover for information on how to update your game code.*

Dump to USB Memory Stick

To initiate, from the **USB MENU**, select the "DUMP" *Icon.* Follow the on-screen prompts to perform a **Data Dump** (download).

Update Game Code

To initiate, from the **USB MENU**, select the "UPDT" *Icon.* Follow the on-screen prompts *or* review the inside cover for more information.

Backup to USB Memory Stick

To initiate, from the **USB MENU**, select the "BKUP" *Icon.* Follow the on-screen prompts to perform a **Backup** (game code only). This backup feature does not retain adjustments and/or settings changes made.

Parts Identification & Location (The Pink Pages)

Table of Contents for Section 4, Chapter 1 of 2

Table of Contents for Section 4, Chapter 1 43

Backbox [S.A.M. System] - Parts ☐ ..... 44 – 45
▷ Backbox & Tournament Header Sign Front Views ▷ Backbox Parts Table ▷ Backglass Parts Table

Speaker Panel [S.A.M. System] - Parts ☐ 45
▷ Speaker Panel Side View ▷ Speaker Panel Parts Table

Cabinet - Parts ■ & Switches ☐ ..... 46 – 47
▷ Cabinet Inside Views ▷ Cabinet Parts & Switches Table

Playfield Top - Miscellaneous Parts ☐ & Brackets ■ 48
▷ Playfield Location & Bottom Arch Drawings ▷ Misc. Parts (Above) Table ▷ Misc. Brackets (Above) Table

Playfield Bottom - Miscellaneous Parts ■ & Brackets ■ 49
▷ Playfield & Back Panel Location Drawings ▷ Misc. Parts (Below) Table ▷ Misc. Brackets (Below) Table

Playfield Top - Switches (Above) ☐ 50
▷ Playfield Location Drawing

Playfield Top - Switches (Below) ■ 51
▷ Playfield Location Drawing

Playfield Top - Flat Rails ☐, Wood Rails ■, Ball Guides ■ & Wire Forms ■ 52
▷ Playfield Location Drawing ▷ Flat Rails Table ▷ Wood Rails Table ▷ Ball Guides Table ▷ Wire Forms Table

Playfield Top - Plastics (Screened & Clear) Kit, Decals & Mylar Kits 53
▷ Plastic Shape & Decal Art Drawings

Playfield Top & Bottom - Metal Posts ☐ & Fin Shank Screws ■ (Actual Size) ..... 54 – 55
▷ Metal Posts & Fin Shank Screw Drawings ▷ Metal Posts Table ▷ Fin Shank Screws Table ▷ Playfield Location Drawing

Playfield Top & Bottom - Nylon Stop, KEPS, Hex, T-, Flange, Pal & Wing Nuts (Actual Size) 55
▷ Nylon Stop Nuts Table ▷ Keps Nuts Table ▷ Hex Nuts Table ▷ T-Nuts Table ▷ Flange Nuts Table ▷ Pal Nuts Table ▷ Wing Nuts Table

Playfield Top - Hex Spacers ☐ (Actual Size) ..... 56 – 57
▷ Hex Spacers Drawings ▷ Hex Spacers Table ▷ Playfield Location Drawing

Playfield Top - Plastic Posts & Spacers ☐ & Metal Spacers ■ ..... 58 – 59
▷ Plastic Posts & Spacers Drawings ▷ Plastic Posts & Spacers Table ▷ Playfield Location Drawings

Playfield Top & Bottom - Rubber Parts Black ■ & White ☐ (Rings Actual Size) ..... 60 – 61
▷ Rubber Parts Drawings ▷ Rubber Bumper Pads Table ▷ Rubber Bumper Post Sleeves Table ▷ Rubber Rings Table ▷ Playfield Location Drawing(s)

Playfield Top & Bottom - Small Bayonet Sockets & Bulbs ■ (Actual Size) ..... 62 – 63
▷ Bulbs & Socket Drawings ▷ Bulbs (#44 / LED & #455) Table ▷ Small Bayonet Sockets Table

Playfield Bottom - Large Bayonet Sockets & Bulbs ■ (Actual Size) 63
▷ Bulbs & Socket Drawings ▷ Bulbs (#89) Table ▷ Large Bayonet Sockets Table

Playfield Top & Bottom - Wedge Base Sockets & Bulbs ■ (Actual Size) 64
▷ Bulbs & Socket Drawings ▷ Bulbs (#555 & LED / #906) Table ▷ Wedge Base Sockets Table

Backbox [S.A.M. System] - Parts

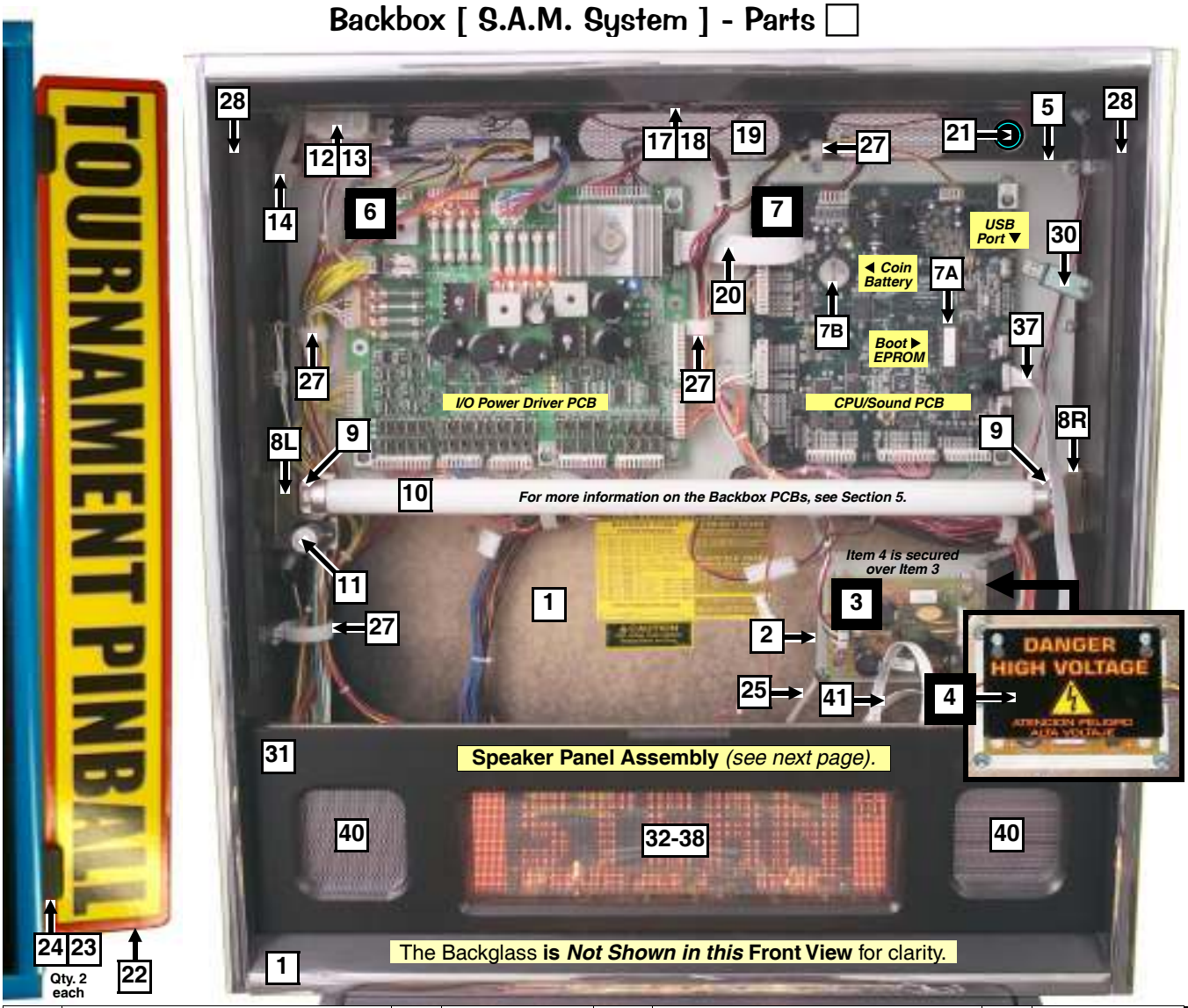

Nr.	BACKBOX PARTS	QTY.	SPI PART Nr.
1	Backbox **Family Guy™** (No Parts)	1	525-5631-17-93
	Item 1 Note: ***Chrome T-Molding*** *is installed and cannot be ordered separately.* Fuse Description (**820-6384-00**) **and** High Voltage Caution (UL) (**820-6082-01**) Decals.		
2	PCB Metal Mounting Plate [Display]	1	535-9769-00
3	Display Power Supply PCB	1	520-5138-00
	Item 3 is secured to @ bottom by: #8-32 X 3/8" SHWH Swg. (Zinc) (Qty. 2) (237-5975-00)		
4	Plastic Cover [**DANGER HIGH VOLTAGE**]	1	830-6053-00
	Items 3 & 4 are secured to @ top by: 1-1/4" X 3/8" Plastic Spacer Gray (Qty. 2) (254-5000-05) **and** #8-32 X 1-3/4" SHWH Ser. (Zinc) (Qty. 2) (237-5975-28)		
5	PCB Metal Mounting Plate [I/O+CPU]	1	535-9664-00
	Items 2 & 5 are secured to Item 1 by: #8 X 1/2" SHWH AB (Zinc) (Qty. 1/hole) (234-5101-00) **and** #10 Washer 7/32" I.D. X .5" O.D. X 1/16" Thick (Qty. 1/hole) (242-5003-00)		
	Note: *Where a Wire Clamp (Item 27) is mounted, a #10 Washer is not required.*		
6	I/O Power Driver PCB [S.A.M. Sys.]	1	520-5249-00
7	CPU/Sound PCB [S.A.M. System]	1	520-5246-00
	7A: 8MB EPROM #M27C801-100F1 (**960-5016-00**)		
	Ordering Note: *Programmed EPROM (**965-BOOT-SAM**)*		
	7B: Coin Cell Battery (CR2430 3V) (**000-0644-01**)		
	*For USB Memory Stick Information, see Item **30** on the next page.*		
	Items 6 & 7 are secured to Item 5 by: #8-32 X 3/8" HWH MS (Qty. 10) (237-5903-00) **and** 1/4" Slf. Rtn. Plastic Spacer White (Qty. 5 [I/O] / Qty. 4 [CPU]) (254-5007-05)		
8L	Fluorescent Light Bracket *(Left Style)*	1	535-7739-00
8R	Fluorescent Light Brckt. *(Right Style)*	1	535-7739-01
	Items 8L & 8R are secured to Item 1 by: #10-24 X 1-1/4" Carriage Bolt Square Neck (Qty. 2/per) (231-5012-00), #10-24 Keps Nut (Qty. 2/per) (240-5207-00) **and** 3/4" X 3" Reinforced Strapping Tape (Qty. 1, sold in 12" length only) (626-5040-00)		
9	Fluorescent Lamp Holder (Socket)	2	077-5214-01
	Item 9 is secured to Items 8L *and* 8R by: #6-32 X 5/8" PPH MS (Sems) Zinc (Qty. 1/per) (232-5203-00) **Lock-In Fluor. Bulb with Yellow Socket Clip** (Qty. 1/per) (**545-6271-00**)		
10	Fluorescent Tube 24" (F20T9CW)	1	165-5061-00

Nr.	BACKBOX PARTS	QTY.	SPI PART Nr.
11	Starter - Fluorescent (FS2 Light)	1	165-5011-01
	Starter Base *(with leads)* [on Item 8L]	1	077-5213-00
	Item 11 is secured to Item 8L by: #4-40 X 1/2" PPH MS (Sems) Zc. (Qty. 2) (237-5813-00)		
12	Ballast Mounting Plate	1	535-8657-00
13	Ballast *CU452-W 1/2" Core 120v 60 Hz 13W*	1	010-5015-00
	Items 12 & 13 are secured to Item 1 by: #6 X 5/8" SHWH AB (Zc) (Qty. 2) (234-5102-04)		
	>>> CAUTION - VERY HOT" Decal (820-6266-00)		
	EU / UK Only : *Ballast, 5/8" Core 50/60 Hz (010-5015-01)*		
14	Ground Strap (5")	1	600-5006-05
15*	Roto Lock Male *(on Cabinet)*	1	355-5006-01
16	Roto Lock Female *(R2-0002-02)*	1	355-5006-02
	Item 16 is secured by: #10-24 X 1-3/4" CBSN (231-5022-00), #10-24 Keps Nut (Qty. 2) (240-5207-00), #10-24 X 2" CBSN (231-5045-00), #10-24 Keps Nut (240-5207-00) **and** #10 Washer 7/32" I.D. X .5" O.D. X 1/16" (Qty. 5) (242-5003-00); *See opposite next page.*		
17	Lock Mounting Plate	1	535-0072-00
18	Lock 5/8" Barrel, 3/4"ø, 1.5" Flat Cam	1	355-5055-00
	Items 17 & 18 are secured by: #8 X 1/2" TP Torx T20 Black (Qty. 2) (237-6173-05)		
19	Back Vent Grill 2-1/2" X 18"	1	545-5072-02
20	Ribbon Cable, 20-Pin (3.5")	1	036-5000-350
	Item 20 connects the *I/O Pwr. Drvr. PCB to the CPU/Sound PCB; For 14-Pin see next page.*		
21	Button Hole Plug (Blk) **(Happ #52-6214-00)**	1	500-6566-00
	Item 21 *plugs the Access Hole required if using optional* ***BETAbrite Sign*** *or* ***Data cables****.*		
22	Header Sign **TOURNAMENT PINBALL**	1	545-6133-00
23	Friction Hinge (Black) *behind* ▲▼	2	390-5053-00
24	Block / Sign & Hinge Stop (Black)	2	545-6174-00
	Item 22 is sandwiched between Items 23 & 24 through 2 holes on each side. Item 23 is secured to Item 1 by: #8-32 X 3/8" PPH MS Ext. Sems (Zinc) (Qty. 2/per) (232-5301-00) **and Item 24 to Items 22-23 by:** #8 X 5/8" PPH AB Black (Qty. 2/per) (232-5101-01)		

PARTS TABLE & VIEWS CONTINUED ON THE NEXT PAGE. ▶

Backbox [S.A.M. System] - Parts

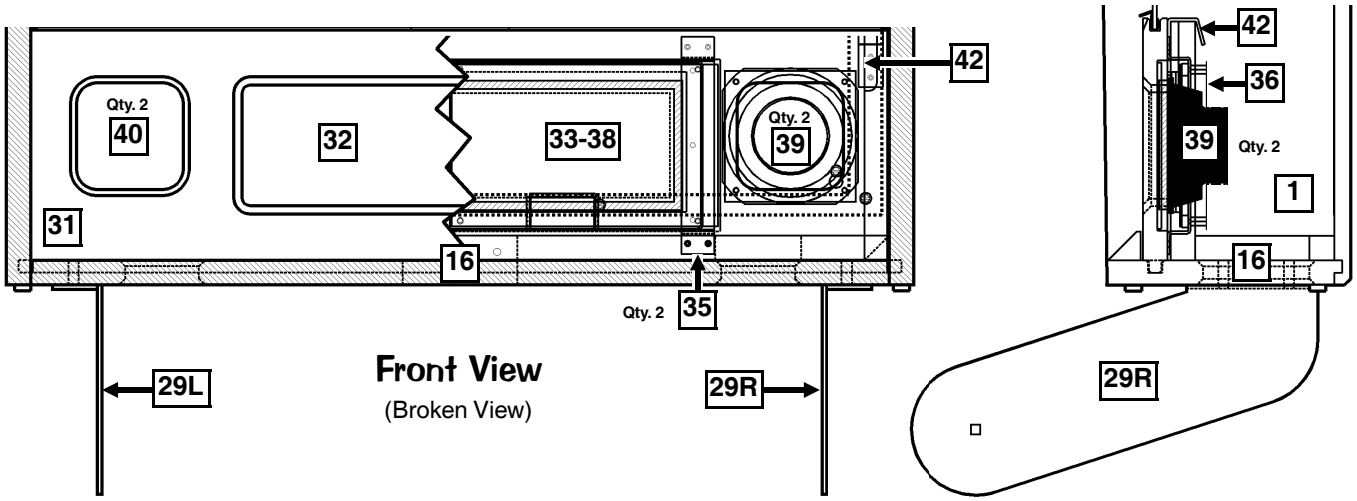

Speaker Panel [S.A.M. System] - Parts

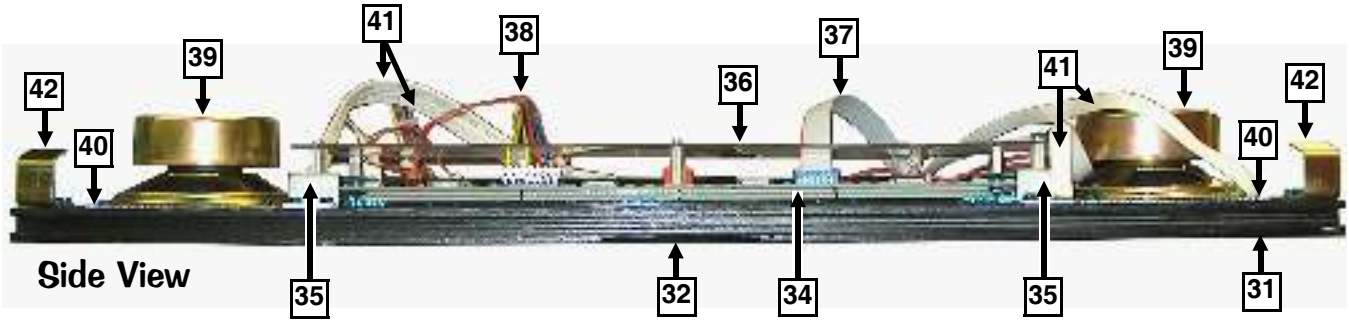

Nr.	BACKBOX PARTS	QTY.	SPI PART Nr.
	◀ *PARTS TABLE & VIEWS CONTINUED FROM THE PREVIOUS PAGE.*		
25	Braided Wire (1-1/2 Feet) **Item 25 is secured by:** Staple 5/16" (Qty. 23) (631-5000-00)	1	600-5001-00
26*	Zip Cable Tie (Screw Down Style) **Item 26 is secured @ inside bot. by:** #8 X 7/8" PPH AB (Zinc) (Qty. 1/per) (232-5103-00)	2	040-5005-00
27	Clamps [Multiple Sizes] **Item 27 secured by:** #8 X 1/2" SHWH AB (Zinc) (Qty. 1/per) (234-5101-00) ***For following sizes, replace -XX with:*** 1/4" Double = **-23** (Qty. 5); 1/2" Single = **-06** (Qty. 1; 3/4" Single = **-08** (Qty. 3); **1"** Single = **-09** (Qty. 1); 1-1/4" Double = **-30** (Qty. 2)	15	040-5000-**XX**
28	Foam 3/16" Thick X 1/4" Wide X 12" ***Above Item 28 is self-adhesive.*** *17.5" strip on each side. Sold in 12" Lengths only.*	3	626-5026-00
29L	Pivot Hinge *(Left Style)*	1	535-7999-00
29R	Pivot Hinge *(Right Style)*	1	535-7999-01
	Items 29L-29R are secured to Backbox by: 1/4"-20 X 1-1/4" C.B. Sq. Neck (Qty. 4) (231-5003-00) **and** 1/4"-20 Flange Nut (Qty. 4) (240-5300-00) **Items 29L-29R are secured to Cabinet by:** Spacer Hex Nut 1/2" O.D. - 1/4-20 X 1/2" TD (Black) (Qty. 1/per) (254-5042-00), Nylon Spacer (Black) (Qty. 1/per) (242-5084-00), 1/4-20 X 1/2" Carriage Bolt Square Neck (Black) (Qty. 1/per) (231-5072-00) **and** Washer 1" O.D. X 1/2" I.D. X 1/16" (Black) (Qty. 1/per side, *only if required*) (242-5087-00)		
30*	Memory Stick USB 1.1 [Generic] 128MB *Item **30** was not included with your game. Read the inside cover or go on-line for more info.* To order with the latest game code copied onto it, add **-93** to the Part Nr. (**970-0128-00-93**). File(s) can be downloaded from our website *(Files are 25MB or larger, DSL or Fast Modem recommended).* Not all manufacturers of Memory Sticks are compatible with our system. Test it out, if it doesn't work properly, return your purchase and order the memory stick through you local pinball distributor *(Stern Pinball Memory Sticks guaranteed compatible).*	1	970-0128-00

(ASM. REF. 505-6002-93-93, Items 1-42 Only, [29-30 not included in assembly])

Take Note:

* An asterisk (*) indicates item(s) are not noted in the pictorials.

Nr.	SPEAKER PANEL PARTS	QTY.	SPI PART Nr.
31	Speaker Panel (Black Wood)	1	525-5515-00
32	Plastic Shield (Display Front Cover) **Item 33 is secured to inside Item 31 by:** #6 X 3/8" SHWH AB (Zinc) (Qty. 8) (234-5000-00)	1	545-5884-00
33*	Foam 3/16" Thick X 1/4" Wide X 12" ***Above Item 33 is self-adhesive.*** *Located between Items 32-34. Sold in 12" Lengths only.*	3	626-5026-00
34	128 X 32 Dot Matrix Display PCB	1	520-5052-00
	/// EURO ONLY RoHS /// 128 X 32 DM Pin-LED PCB		520-5052-04
	/// EURO ONLY RoHS /// Dot Matrix Pin-LED Bezel **Item 34 is secured to Item 35 by *(at corners)*:** 3/16" X 3/8" Spacer Gray (Qty. 4) (254-5000-18) **and** #6-32 X 1/2" SHWH Swage (Serr) Zinc (Qty. 4) (237-5976-03)		545-6281-00
35	Dot Matrix Display Mounting Bracket **Item 35 is secured to Item 31 by:** #8 X 5/8" SHWH AB (Green) (Qty. 4/per) (234-5102-04)	2	535-8368-01
36	Plastic Shield (Display Back Cover) **Item 36 is secured to Item 34 by:** 1/2" X 1/4" Hex Spacer #6-32 Tap (Qty. 4) (254-5008-03), 3/4" X 1/4" Hex Spacer #6-32 Tap (Qty. 2) (254-5008-04), #6-32 X 1/4" PPH MS (Sems) Zinc (Qty. 2) (232-5200-00) **and** #6-32 X 3/8" PPH (Qty. 6) (232-5201-00)	1	830-6040-00
37	Ribbon Cable, 14-Pin (32")	1	036-5260-32
	/// EURO ONLY RoHS /// LED Ribbon Cable Filter PCB ***Item 37 (14-Pin) connects the** 128 X 32 Dot Matrix Display PCB to the CPU/Sound PCB.*		520-5259-00
38	Display Cable *(Wiring Harness)*	1	036-5454-01
	/// EURO ONLY RoHS /// LED Display Adapter Harness		036-5520-00
39	Speaker (Shld.) 4" 8Ω #4060CESH-1	2	031-5004-01
40	Speaker Grill *(**Chrome** w/no Artwork)* **Items 39-40 are secured by:** #8 X 5/8" SHWH AB (Green) (Qty. 4/per) (234-5102-04)	2	535-8081-**04**
41	Ground Strap (25") **[2 per : Items 35 & 39]**	4	600-5006-25
42	Speaker Panel Hook Bracket **Item 42 is secured by:** #8 X 5/8" SHWH AB (Green) (Qty. 2/per) (234-5102-04)	2	535-7009-02

(ASM. REF. 515-6888-**05**, Items 31-42 Only [includes wiring])

Nr.	BACKGLASS PARTS	QTY.	SPI PART Nr.
i*	Clear Backglass 25.906" X 19.187"	1	660-5038-02
ii*	**Family Guy™ Film Art (#93)**	1	830-5293-00
iii*	Top Plastic Channel - 26"	1	545-5018-15
iv*	Bottom Plastic Lift Channel - 26-1/16"	1	545-5021-01
v*	Plastic Edging (Left/Right) - 18-1/8" **Items i-v are secured to Item i by:** Taple (Double-Sided), 12" (Qty. 1) (626-5005-00) ***Note:** Only 6" required, sold in 12" lengths only.*	2	545-5018-14

(ASM. REF. 515-5450-00-93, Items i-v)

For Backbox Parts see the previous two pages.

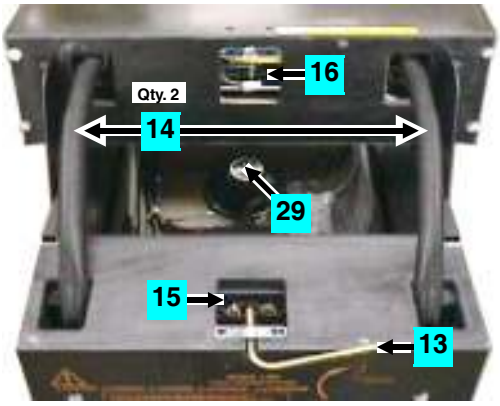

Item 30E
(Power On/Off Switch) is located under the Cabinet (Front Right) directly below the Power Box (in the Cabinet).

30E

View of the Coin Door (Item 17) open.

Qty. 4
2
Item 2 Ordering Note: *Leg comes with Leveler. Leveler can be purchased separately. Leg cannot be ordered **WITHOUT** Leveler (see Parts Table below, **Item 2**).*

Take Note:

* An asterisk (*) indicates item(s) are not noted in the pictorials.

Legend Note: Items noted with a cyan square ■ are Cabinet Parts. Items noted with a white square □ are Switches.

Nr.	CAB. PARTS & SWITCHES	QTY.	SPI PART Nr.
1	Screened Cabinet **Family Guy™** (No Parts)		**525-5395-15P-93**
2	Black Leg with Leveler Asm.	4	500-5921-50
	Item 2 is secured by: Leg Bolt Back Plate (**535-5703-00**) **and** Leg Bolt 3/8" X 16 X 2-1/2" Hex 5/8" Hd. (2/per) (231-5001-01) *Leg Leveler **ONLY** (3/8"-16 X 3") (500-5017-00).*		
3	**Start Button** (Red Rnd.), Switch + Lamp Asm.	1	500-6388-02
	Item 3 includes the Switch & Lamp (No Wiring; desolder old wiring where required). ***Assembly Parts Included :*** Microswitch (**180-5174-00**); #555 Wedge Base Clear Bulb (**165-5002-00**);		
4	Ball Shooter (Plunger) Assembly	1	**500-6146-00-04**
	FOR A BREAKDOWN OF PARTS SEE: Sec. 4, Chp. 2, Drawings for ... Assemblies...		
5	**Flipper Button** (Red) Asm. (No Switch)	2	500-5026-32
	Item 5 is secured by: Pal Nut for Flipper Button (Metal) (Qty. 2/per) (240-5003-01) **and is fitted with:** O-Ring 11/32" X 7/32" X 1/16" (Qty. 1/per) (545-5850-00)		
6S	Flipper Switch Single Assembly[NOT USED]	0	500-6889-01
	Assembly Parts Included : Flipper Switch Stack Single *(Paliney Contact)* (**180-5160-01**) **and** Capacitor - Ceramic .05 Mfd 25 volt (**130-5001-00**) **Item 6S/6D are secured to Cab. by:** #6 X 1-1/4 SHWH AB (Zinc) (Qty. 2/per) (**237-5959-00**)		
6D	Flipper Switch Double Assembly	2	500-6890-01
	Assembly Parts Included : Flipper Switch Stack Double *(Paliney Contact)* (**180-5164-01**) **and** Capacitor - Ceramic .05 Mfd 25 volt (**130-5001-00**) **Item 6S/6D are secured to Cab. by:** #6 X 1-1/4 SHWH AB (Zinc) (Qty. 2/per) (**237-5959-00**)		
7	Rear Glass Channel 20-3/8" Length	1	545-5038-00
8	Plastic Channel 42-5/8" Lg. (Left/Rt.)	2	545-5017-00

Nr.	CAB. PARTS & SWITCHES	QTY.	SPI PART Nr.
9L	Side Armor (Left) with Button Guard	1	535-9596-00
9R	Side Armor (Right) with Button Guard	1	535-9596-01
	Items 9L & 9R are secured @ front & side by: Pem Stud 1/4 X 1" Flange Head Black (Qty. 1/per) (237-6116-01), 1/4-20 Flange Nut (Qty. 1/per) (240-5300-00) **and** #8 X 1/2" T20 Tamper Proof Black (Qty. 5/per) (237-6173-05); **@ rear (backbox) by:** #10-24 X 1" Sq. Neck Carrg. Bolt Black (Qty. 1/per) (231-5021-00) **and** #10-24 Hex Nut (Qty. 1/per) (240-5202-00)		
10B*	Front Molding (Black) ***includes*** Item **11B**	1	**500-6882-00-00**
	Item 10B includes: Self-Adhesive Foam Rubber 3/8" X 3/16" X 20-3/8" (3') (626-5001-00) *Items **10B** works with Item **22 (next page)** ONLY. *10B to include 11T use 500-6882-01-02**T***		
11T	**Tourney Button Twist-Lock** (Yel. Sq.) + Wiring	1	**500-6884-00-TLC**
	Item 11T includes Switch, Lamp & Wiring (036-5477-99-01). To order separately use: Microswitch No Actuator (**180-5119-03**); CM86 / C86 6.3V Mini-Wedge Base Clear Bulb (**165-5002-01**);		
11B*	Button Plug (Black) for Square Hole	0	500-6883-00
12	Playfield Glass (Tempered) 21" X 43" X 3/16"	1	660-5001-00
13	Hex Key Allen Wrench 5/16"	1	777-0001-00
14	Corrugated Tubing Black **1"ø X 2.6' Lg.**	1	605-5008-03
	*Above Item **14** covers the Cable Wiring Harnesses going into the Backbox from the Cabinet.*		
15	Roto Lock Male (R2-0055-02)	1	355-5006-01
	Item 15 is secured by: #10-24 X 1-3/4" Carr. Bolt Sq. Neck (Qty. 2) (231-5022-00), #10-24 NSN (Qty. 2) (240-5206-00) **and** #10 Washer 7/32" X 1/2" X 1/16" (Qty. 2) (242-5003-00)		
16	Roto Lock Female *(on Backbox)*	*1*	*355-5006-02*

PARTS TABLE & VIEWS CONTINUED ON THE NEXT PAGE. ▶

Cabinet - Parts ■ & Switches □ Continued

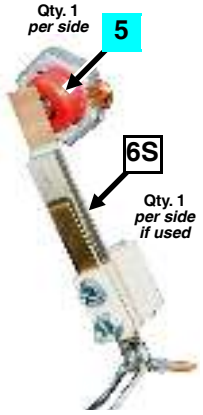

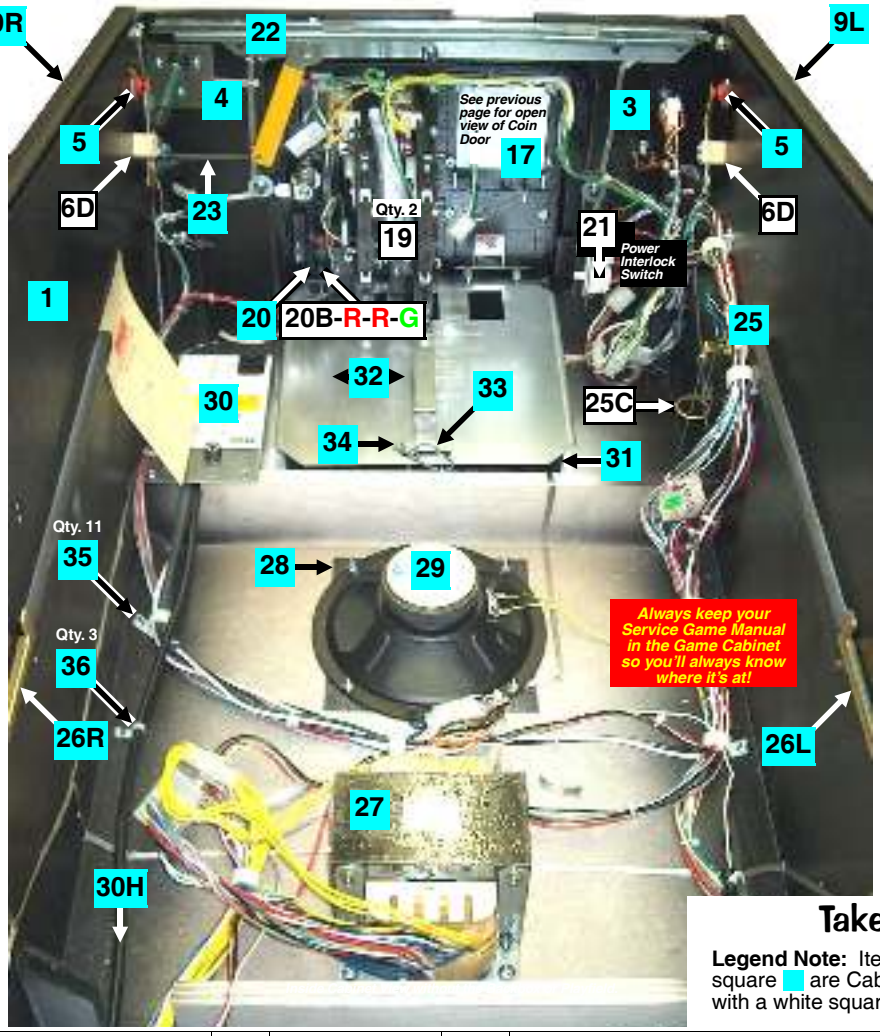

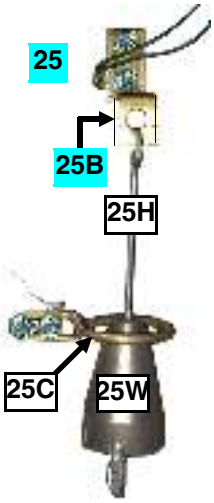

Take Note:

Legend Note: Items noted with a cyan square ■ are Cabinet Parts. Items noted with a white square □ are Switches.

Nr.	CAB. PARTS & SWITCHES	QTY.	SPI PART Nr.
	◄ *PARTS TABLE & VIEWS CONTINUED FROM THE PREVIOUS PAGE.*		
17	Coin Door 2-Cht $V Up-Stk. 4-Button Bracket	1	501-5018-172
	Item 17 is secured by: 1/4"-20 X 1-1/4" Carriage Bolt Square Neck (Qty. 4) (231-5003-00) 1/4"-20 Flange Nut (Qty. 4) (240-5300-00) **and** Fend Washer 1/4" I.D. X 1" O.D. (Qty. 3) (242-5009-00) ***Note:*** *For Coin Door other than USA call Technical Support for SPI Part Nr.*		
18	Lock 7/8" Barrel, 435X, Offset Cam	1	**355-5021-03K**
19	Coin Door Switch (USA) (Happ)	2	180-5024-**01**
	ALT. SW.: 19C: Coin Door Switch (USA) (Coin Control) (**180-5024-00**)		
	ALT. SW.: 19J: Coin Door Switch (¥ Japan) (**180-5091-00**)		
20	4-Button Bracket *(for Service Menu Buttons)*	1	535-6860-04
	SWITCH: 20B: Push-Button Service Switch (**Black**) (**180-5192-00**)		
	SWITCH: 20R: Push-Button Service Switch (**Red**) (Qty. 2) (**180-5192-02**)		
	SWITCH: 20G: Push-Button Service Switch (**Green**) (**180-5192-04**)		
	Ordering Note: *Securing hardware for switches included. Decal in kit sold separately.*		
21	Power Interlock-Memory Protect Switch Asm.	1	500-5808-05
	Assembly Parts Included **:** Mounting Bracket (**535-9794-00**), Power Interlock (Playfield) Switch (**180-5136-00**) **and secured by:** #8 X 1/2" SHWH AB (Zinc) (Qty. 2) (234-5101-00)		
22	Front Molding Lockdown Asm.	1	500-6881-00
	Item 22 is secured by: #10-24 X 1-1/4" Carr. Bolt (Qty. 2) (231-5012-00), #10-24 Keps Nut (Qty. 2) (240-5207-00), #8 X 1/2" SHWH AB Zinc (Qty. 1) (234-5101-00) **and** #10 Washer 7/32" I.D. X 1/2" O.D. X 1/16" (Qty. 1) (242-5003-00)		
23	Lockdown Spring *(connected to handle)*	1	265-5008-00
24	Grills 2-1/2" X 18" *(on Back & Bottom)*	2	545-5072-02
25	Plumb Bob Tilt Switch *Indivual Parts Only*		***Ind. Parts Only***
	SWITCH: 25B: Bracket for Hanger Wire (**535-5221-00**)		
	25C: Contact Wire Form (**535-7563-01**)		
	25H: Hanger Wire (**535-5319-02**)		
	25W: Plumb Bob Weight (**535-5029-00**) *(includes Thumb-Screw)*		
	Item 25B is secured to Cabinet by: #8 X 1/2" SHWH AB (Zinc) (Qty. 4) (234-5101-00)		
26L	Slide & Pivot Support Bracket (Left)	1	535-5989-00
26R	Slide & Pivot Support Bracket (Right)	1	535-5990-00
	Items 26L & 26R are secured by: #10-24 X 1-1/4" Carriage Bolt Square Neck Black (3/per) (231-5012-00) **and** #10-24 KEPS Nut (3/per) (240-5207-00)		

Nr.	CAB. PARTS & SWITCHES	QTY.	SPI PART Nr.
27	Transformer 5.7VAC *(with Ballast Winding)*	1	010-5012-01
	Item 27 is secured by: 1/4"-20 X 5/8" PPH MS (Zinc) (Qty. 4) (237-5854-00) **and** 1/4" Split Lock Washer (Qty. 4) (244-5000-00)		
28	Speaker Grill 7" X 7"	1	545-5072-03
29	Speaker 8" ø Round 8010 4Ω	1	031-5007-01
	Items 28 & 29 are secured by: #6-32 X 1-1/4" Fin Shank Screw (Qty. 4) (237-5883-00) **and** #6-32 Keps Nut (Qty. 4) (240-5008-00)		
30	Power Input Box Assembly	1	515-5360-07
	30A: Power Box *(No Parts)* Mounting Frame (**535-5932-00**)		
	30B*: Line Filter (**150-5000-00**)		
	30C*: Varistor* TNR159211KM (Domestic) (**150-5001-00**)		
	30D*: Varistor TRM15G431KM (Euro) (**150-5002-00**)		
	SWITCH: 30E: On/Off Rocker Switch + Bracket Assembly (**515-7085-00**)		
	30E incl.: Switch, APEM R2101C5NBB (**180-5001-03**) + Bracket (**535-8318-00**)		
	30F*: Power Box Decal (**820-6123-03**)		
	30G: Service Outlet (3-Prong / US) (**180-5008-01**)		
	30H: Line Cord 10' ROJ 3" + Ring Terminal Assembly (**515-6566-00**)		
	30H incl.: Line Cord 10' ROJ 3" (**034-5000-10**) + Ring Terminal (**055-5031-10**)		
	30i: Recessed (Black) Cup *(rear of Cabinet)* (**545-5122-00**)		
	30J*: Snap Bushing 9/16" (White) (**280-5001-01**)		
	30K: Fuse 8 Amp 250V Slo-Blo (Domestic) (**200-5000-05**)		
	***30K Int'l.*:** Fuse 5 Amp 250V Slo-Blo (International) (Qty. 2) (**200-5003-00**)		
	30L: Fuse Holder (**205-5001-00**)		
31	Cash Box Plastic Bottom	1	545-5090-00
32	Cash Box Cover (Validator)	1	535-5013-03
33	Cash Box Lock Bracket (U-Wire)	1	535-7562-00
	Item 33 is secured by: #8 X 5/8" HWH AB (Green) (Qty. 2) (234-5102-04)		
34	Large Hair-Pin Clip	1	535-7772-00
35	Clamps [Multiple Sizes]	11	040-5000-**XX**
	Item 35 is secured to Item 1 by: #8 X 1/2" SHWH AB (Zinc) (Qty. 1/per) (234-5101-00)		
	For following sizes, replace -XX with: 3/4" Single = **-08** (Qty. 8); 1-1/2" Single = **-10** (Qty. 3)		
36	Zip Cable Tie (Screw Down Style)	3	040-5005-00
	Item 36 is secured by: #8 X 7/8" PPH AB (Zinc) (Qty. 1/per) (232-5103-00)		
37†	Meter +12VDC ***with*** *Bracket Optional*	0	**G-0053-013-102**

*† Meters (Diode included) are optional and were not included in this Pinball Machine. Order without the bracket use **G-0053-013-102A**. More information or Qs? Call Technical Support.*

Sec. 4: Parts Id. ...

Main Playfield Top - Miscellaneous Parts ☐ and Brackets ■

Nr.	THE PLAYFIELD	QTY.	SPI PART Nr.
Main P/F	P/F Screened **w/** Inserts & **NO** Parts	1	830-5100-93
	P/F Complete **w/** Inserts & **ALL** Parts	1	505-6004-93-93

Nr.	MISC. PARTS (ABOVE)	QTY.	SPI PART Nr.
1	Arch (Black Metal) [*no Forks*]	1	535-8392-01

Item 1 is secured to Item 9 below by: #10-32 X 5/16" PFH U/C MS (Zinc) (Qty. 2) (237-6013-00) ***Usage Note:*** *When replacing the Arch,* order new replacement **Nelson Protect Strips 7-5/8"** *(not included)* (Qty. 2) (545-5212-04; use -02 for 8-9/16" size)
For Decals, see ***Playfield Top - Plastics Kit, Decals & Mylar Kits****.*

2	Instruction Card [Eng./Spanish] Family Guy™		755-5193-12-Y

Note : *Visit* ***www.sternpinball.com*** *for a PDF copy of the Game Instruction Card which will also have any translated Instruction Cards made for this game. Find Game Link or Archives.* ***Spanish*** *755-5193-**02**-Y;* ***German*** *755-5193-**03**-Y;* ***Italian*** *755-5193-**04**-Y;* ***French*** *755-5193-**05**-Y.*

3A	Coin Card (2-Sided) USA 10 Default	1	755-5400-11-Y
3B	Coin Card (2-Sided) USA 5	1	755-5400-08-Y

For Coin Card views, see below or ***online :*** *http://www.sternpinball.com/coinagecards.shtml*
Ordering Note : *If this is a non-US Game, Coin Card(s) Part Numbers provided will differ.*

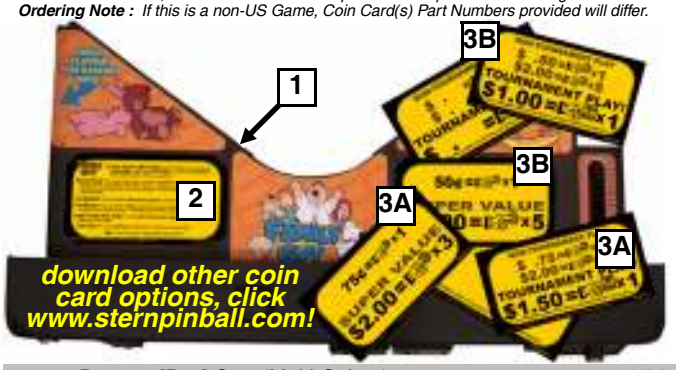

4	Bumper [Pop] Cap *(Multi-Colors)*	3	550-5057-XX

Replace -XX in the part number with -01 (Clear); -02 (Red); -05 (Blue)
Item 4 is secured by: #4 X 3/4" PRH (Zinc) T-25 (Qty. 2/per) (237-5873-00)

5	Light Cover *w/ tabs (Multi-Colors)*	5	550-5031-XX

Replace -XX in the part number with -01 (Clear); -02 (Red); -05 (Blue); -06 (Yellow)
Item 5 is secured to the Backpanel by: #8 X 1/2" SHWH AB (Zinc) (Qty. 2/per) (234-5101-00) **and is secured to the Plastics by:** #6-32 X 1/2" PPH Sems (Zinc) (Qty. 2/per) (232-5202-00) **and** #6-32 Nylon Stop Nut (Qty. 2/per) (240-5005-00)

6	Light Reflector (Silver)	4/2	545-5409-01

Ordering Note : #555 Wedge Base Bulb (165-5002-00) (Qty. 1/per); Wedge Base Socket (Laydown) (077-5026-01) (Qty. 1/per) *(views on Page **64**)*

7	Bubble Level Assembly	1	500-6815-00

***Assembly Parts Included* : Level** .8mm Empire #0224 (**545-6001-01**) or **Level Mount** (**545-6068-00**). **Flange secured by:** #6-32 X 1/4" PPH MS (no Sems) Zinc (237-5500-00) **and** #6-32 Keps Nut (240-5008-00) **Item 7 is secured to the Wood Rail by:** #6 X 1/2" HWH AB Zinc Red (Qty. 2) (234-5001-02)

8	Pinball (Steel) 1-1/16" ø	8	260-5000-00

Nr.	MISC. BRACKETS (ABOVE)	QTY.	SPI PART Nr.
9	Bracket, Playfield Hanger	2	535-8385-00

Item 9 is secured to the Playfield (P/F) by: #8-32 X 7/8" HWH MS Zinc (Qty. 2/per) (237-5890-00) **and** #8-32 T-Nut (Qty. 2/per) (240-5101-00)

10	Bracket, Arch Retaining (Hold-Down)	2	535-8394-00

Item 10 is secured to the P/F by: #8 X 1/2" SHWH AB (Zinc) (Qty. 3/per) (234-5101-00)

11	Bracket, Plate *(Newton Ball)*	2	535-9523-00
	Wire Form *(Newton Ball Retention)*	2	535-9522-00

Item 11 is secured by: #8 Washer (Qty. 1/per pem) (242-5005-00), 3/16" I.D. Rubber Ring (Black) (Qty. 4) (545-5348-01) **and** #8-32 Nylon Stop Nut (Qty. 1/per pem) (240-5102-00)

12	Bracket, Gate with Spring Flap Asm.	1	515-7436-00
	Wire Form *(for above Gate Bracket)*	1	535-9683-00

Item 12 is sec'd by: #8-32 Nylon Stop Nut (Qty. 2) (240-5102-00) **Ref. Asm: 500-6853-00**

13	Bracket, Ramp Mounting	1	515-6508-00

Item 13 is secured to the Wood Rail by: #6 X 1/2" PTH A (Zinc) (Qty. 2) 237-5809-00

14	Bracket, Adaptor Plate *(for Bumper)*	1	535-9977-00

Item 14 is secured under Items 15+16 over Red Bumper Cap by: *See Page **88**.*

15	Bracket, Tapped Plate *(for Peter)*	1	535-9908-00
16	Brckt., Adaptor Plate *(for Peter+Chris)*	2	535-9909-00

Item 16 is secured by: #6-32 X 3/8" PFH MS (Zinc) (Qty. 2/both) (237-5850-00) **and** ***for Chris:*** #6 Washer (Qty. 2) (242-5001-00) **and** #6-32 Nylon Stop Nut (Qty. 2) (240-5005-00)

17	Bracket, Support *(for Lois)*	1	535-9928-00

Item 17 is secured by: #4-40 X 3/8" PFH MS Black Oxide (Qty. 1) (237-5983-00) **and** #6 X 1/2" HWH AB (Zinc) Red (Qty. 2) (234-5001-02) *See Page **88**.*

18	Bracket, Support *(for Mini-Pinball)*	1	535-9975-00

Item 18 is secured to Back Panel by: #8-32 X 5/8" SHWH Serr. Swage (Zinc) Wax (Qty. 2) (237-5975-03) **and** #8-32 T-Nut (Qty. 2) (240-5101-00) *See Page **89**.*

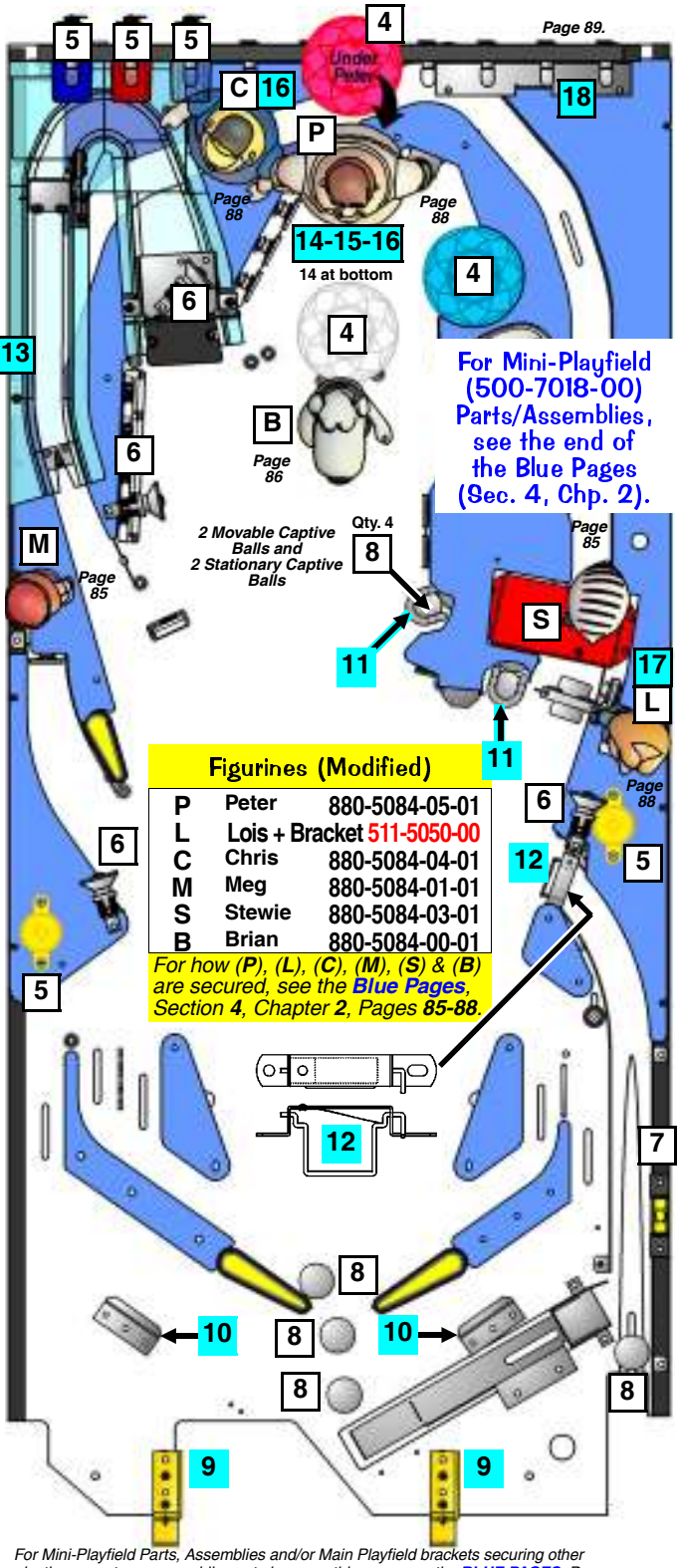

For Mini-Playfield Parts, Assemblies and/or Main Playfield brackets securing other plastics or parts on assemblies not shown on this page, see the ***BLUE PAGES****, Pages*

Take Note:

Legend Note:
Items noted with a white square ☐ are Misc. Parts (Above).
Items noted with a cyan square ■ are Misc. Brackets (Above).

Optional Kits available through your Distributor:

Pinball Location Maintenance Standard Kit: 502-6002-93

Kit includes : *8 oz. Novus Wax #2 Fine (Red) (**675-0003-01**), Cloth, Rubber Rings (used above playfield), Bulbs (Bulb quantities vary and is limited to 25 per type), Fuses (5/per type) and 4 Pinballs.* ***Note:*** *Quanties, sizes and contents subject to change without notice.*

Sec. 4: Parts Id. ...

Main Playfield Bottom - Miscellaneous Parts ■ and Brackets ■

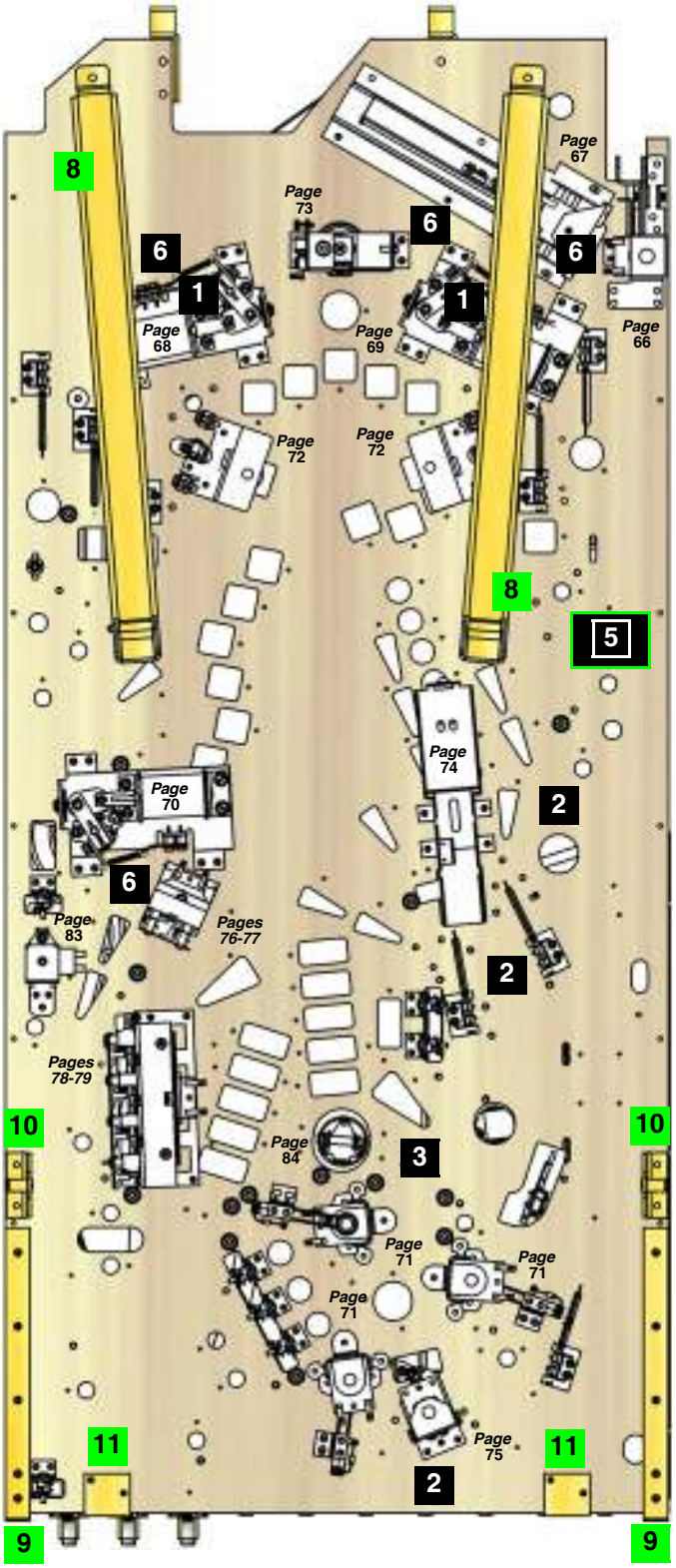

*For Mini-Playfield Parts, Assemblies and/or Backpanel Parts not shown on this page, see the **BLUE PAGES**, Pages **65-94**.*

Nr.	THE PLAYFIELD	QTY.	SPI PART Nr.
Main P/F	P/F Screened **w/** Inserts & **NO** Parts	1	830-5100-93
	P/F Complete **w/** Inserts & **ALL** Parts	1	**505-6004-93-93**

Nr.	MISC. PARTS (BELOW)	QTY.	SPI PART Nr.
1	Insulation Fiche Paper **(under Lower Flippers)**	2	545-5721-00
2	Diode Terminal Strip 2-Lug (810) Isolated	3	055-5203-00
3	Diode Terminal Strip 3-Lug (813) Isolated	1	055-5204-03
4	Diode Terminal Strip 5-Lug (813) Isolated	0	055-5204-05
	Items 2-4 are secured by: #6 X 3/8 HWH AB Zinc (Qty. 1-2/per) (234-5000-00) ***Note:*** *1N4004 Diodes (**112-5003-00**) are used in all Diode applications. 1N4001 Diodes can be used for Switches and/or Lamps.*		
5	PCB, Stepper Motor Controller	1	511-5045-00
	Item 5 is secured by: *#6 X 3/4" SHWH AB (Zinc) (Qty. 4) (234-5003-00)* *For more details on Item **4**, see Sec. **5**, Chapter **4, Printed Circuit Boards**, Pages **144**.*		
6	3A 250v Slo-Blo Fuse	3	200-5000-08
	Fuse Clip Holder (Socket)	3	205-5000-01
	Item 6 is secured by: #6 X 1/2" PPH AB (Qty. 1/per) (237-5805-00) ***Note:*** *Item **6**, Fuse Clip Holder (Socket) 205-5000-01 is part of a set of 12 (205-5000-12). You can order them as individuals (...-01) or a set of 12 (...-12).*		
7*	Terminal Strip/Fuse Decals A-D	1	820-6221-93
	Note: *For Decal Descriptions & Locations, see **Playfield Terminal Strips, Fuses & Misc. Wiring Descriptions & Locations,** Section **5**, Chapter **2**, Playfield Wiring.*		

Nr.	MISC. BRACKETS (BELOW)	QTY.	SPI PART Nr.
8	Bracket, Playfield Support Slide	2	535-6862-05
	Item 8 is secured by: #10 X 1/2" HWH A (Zinc) (Qty. 2/per) (237-5817-00), #8-32 X 5/8" SHWH Swage (Zinc) Wax (Qty. 1/per) (237-5975-03) **and** #8-32 T-Nut (Qty. 1/per) (240-5101-00)		
9	Bracket, Edge Slide (Extended)	2	535-5988-01
	Item 9 is secured by: #4 X 1/2" PFH (Zinc) (Qty. 5/per) (237-5840-00) **and** #8-32 T-Nut (Qty. 2/per) (240-5101-00)		
10	Bracket, Pivot Pin Welded Assembly	2	500-5329-03
	Item 10 is secured by: #8-32 X 5/8" SHWH Swage (Zinc) Wax (Qty. 2/per) (237-5975-03)		
11	Bracket, Back Panel Mounting	2	535-8964-00
	Item 11 is secured by: #8 X 1/2" SHWH AB (Zinc) (Qty. 2/per) (234-5101-00) **and** #8-32 T-Nut (Qty. 2/per) (240-5101-00)		
12*	Tie Post (White Nylon)	7	545-5253-01
	Item 12 is secured by: #6 X 5/8" SHWH AB Green (Qty. 1/per) (234-5002-00)		

Take Note:

* An asterisk (*) indicates item(s) are not noted in the pictorials.

Legend Note:
Items noted with a black square ■ are Miscellaneous Parts (Below)
Items noted with a green square ■ are Misc. Brackets (Below).

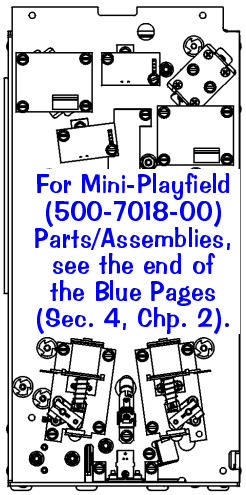

For Mini-Playfield (500-7018-00) Parts/Assemblies, see the end of the Blue Pages (Sec. 4, Chp. 2).

Optional Kits available through your Distributor:

Pinball Location Maintenance Deluxe Kit: 502-6003-93

Deluxe Kit includes : *Pinball Location Maintenance* Standard Kit as described plus a quanity of Flipper Rebuild Kits. ***Note:*** *Quantity varies which equals the same quantity of flippers used in this game.* ◄ THIS GAME KIT INCLUDES (3) FLIPPER REBUILD KITS ◄

Sec. .4: Parts Id. ...

Playfield Top - Switches (Above) ☐ (on Gates, Spinners & Stand-Alone)

Nr.	SWITCHES	QTY.	SPI PART Nr.
	Exit Gate Assembly	1	***Ind. Parts Only***
A-33	***Individual Parts Only :*** Switch (**180-5087-00**), Switch Gate Bracket (**535-6303-03**), Wire Form on Bracket (**535-6304-03**), Switch Body Protect Plate (**535-6539-00**), Diode 1N4004 (**112-5003-00**) **and** #2-56 X 1/2" Uns. Serr. HWH #4 Head TR3 Black (Qty. 2) (**237-5937-02**) (ASM. REF. 515-6490-09)		
	Switch *(for Playfield Wire Gates)*	1	180-5087-00
	*Also see Section **4**, Chapter **2**, (**Blue Pages**): Left Ramp Assembly, see T.O.C., Page **65**.*		

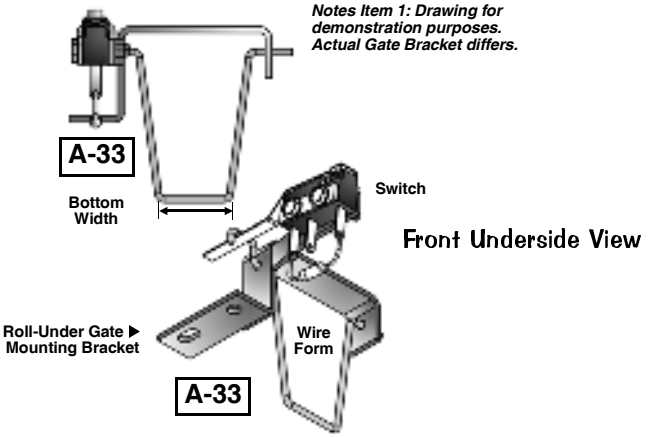

Notes Item 1: Drawing for demonstration purposes. Actual Gate Bracket differs.

Front Underside View

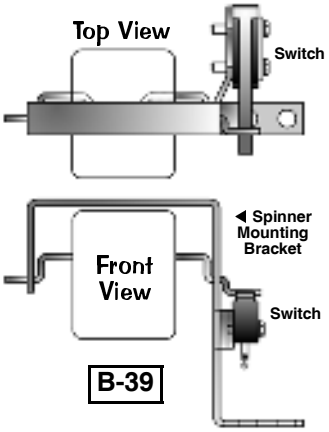

	Spinner & Switch Assembly	1	***Ind. Parts Only***
B-39	***Individual Parts Only :*** Switch (1-1/4" Actuator Blade) (**180-5010-04**), Spinner Mounting Bracket (**535-8684-01**) **and** Spinner Target Sub-Assembly (**515-7088-00**) and Lexan Decals *(reference only)* (**Kit: 802-5001-93**) ***Note:*** *Individual Lexan Decals (830-6394-XX) are not available individually, ordering of kit is required. For all pieces, see **Playfield Top - Plastics (Screened & Clear) Kit, Decals* & Mylar* Kits**, Page **53**.* (ASM. REF. 500-6421-01)		
	Switch *(1-1/4" Actuator Blade)*	1	180-5010-04
C-35	Switch *(Roller Actuator, Lite-Force)*	1	180-5119-02
	Associated Parts Not Included : Switch Body Protect Plate (**535-6539-00**) **and** Diode 1N4004 (Qty. 1/per) (**112-5003-00**) **Item C-6 is secured by:** #2-56 X 1/2" Unslt HWH #4 Hex TR3 Blk (Qty. 2/per) (237-5937-02) *Also see Section **4**, Chapter **2**, (**Blue Pages**): Latch Gate Assembly, see T.O.C., Page **65**.*		
D-48	Switch *(Happ #95-1128-00)*	1	180-5183-00
	Requires: Switch Body Protect Plate (**535-6539-00**), Diode 1N4004 (**112-5003-00**) **and** #2-56 X 1/2" Uns. Serr. HWH #4 Head TR3 Black (Qty. 2) (**237-5937-02**) **and** #2-56 Hex Nut (Qty. 2) (240-5301-00) Also see Sec. **4**, Chp. **2**, (**Blue Pages**): *Flat Ramp Asm. (Sneak Lanes), see T.O.C., Page **65**.*		

For Mini-Playfield (500-7018-00) Parts/Assemblies, see the end of the Blue Pages (Sec. 4, Chp. 2).

example:

"A-#" means, it is Item Number A-# in the Part Table. The "-#" indicates more than 1 switch is present. So it is replaced with the Switch's "Switch Matrix Number" (e.g. A-33, Item A Switch and one of the Switches referenced is from Switch Matrix Number ***33***).

If only 1 switch type for the item exists, the Switch Number will be listed with the Item Number (e.g. C-39, Item C Switch and the Switch Matrix Number is 39).

Playfield Bottom - Switches (Below) ■ (on Assemblies & Stand-Alone)

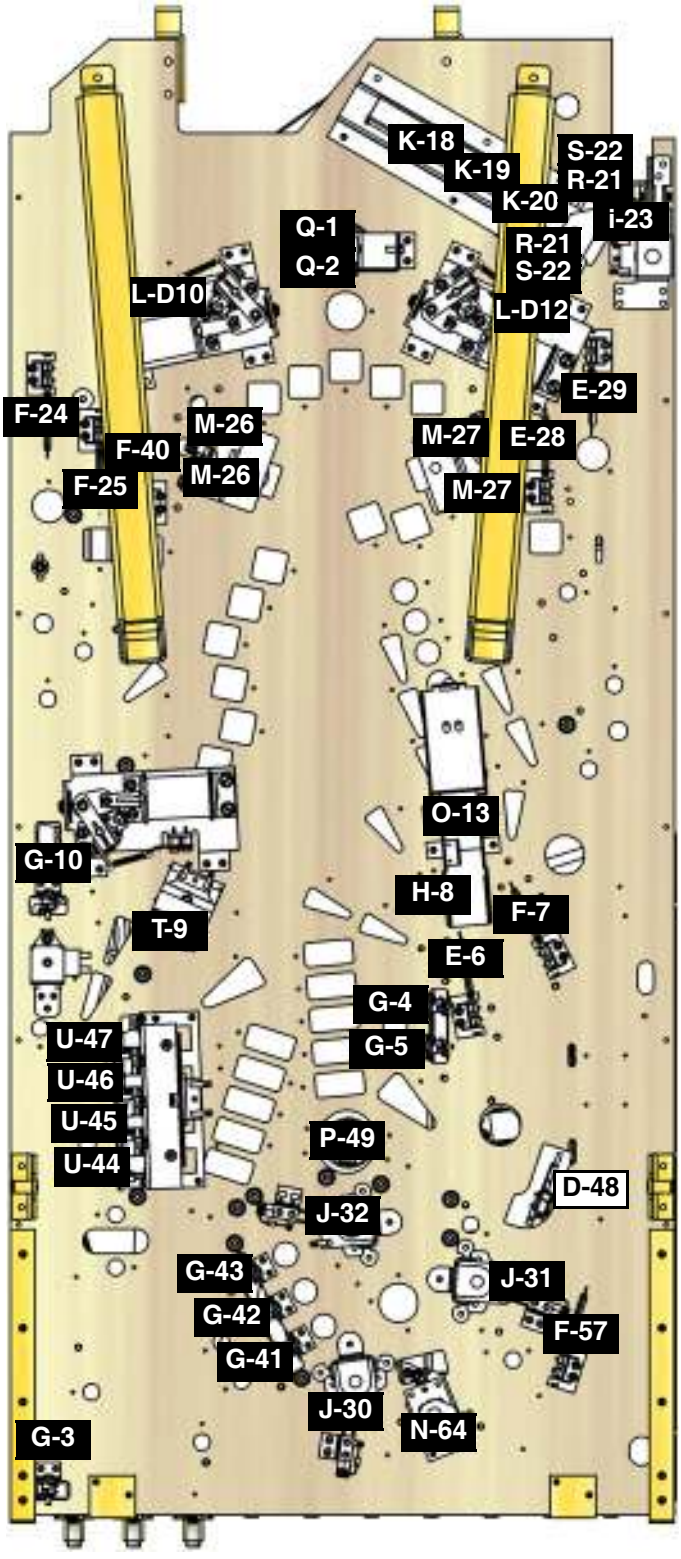

Nr.	SWITCHES	QTY.	SPI PART Nr.
E-#	Sw., Roll-Over Standard Force *(Left Mnt. Style)* *Switch Matrix Numbers **6**, **28** & **29**.*	3	500-6227-01
F-#	Sw., Roll-Over Std. Force *(Right Mount Style)* **Bracket secured to Playfield by:** #6 X 1/2" SHWH AB (Zinc) (Qty. 2/per) (234-5001-02) *Switch Matrix Numbers **7**, **24**, **25**, **40** & **57**.*	5	500-6227-02
G-#	Switch & Target Riveted Asm. 1"² (White) ***Asm. Parts Included :*** Stack Switch (**180-5133-00**) **and** 1" Sq. Target White (**545-5470-08**) ***Not Included, order separately:*** Switch Mounting Bracket (**535-6896-00**), Switch Back Plate (**535-6452-00**), Foam Pad (**626-5029-00**) **and** #6-32 X 3/4" HWH Swage (Zinc) (Qty. 2) (**237-5976-05**) *Switch Matrix Numbers **3**, **4**, **5**, **10**, **41**, **42** & **43**.*	7	515-5162-08
H-8	Switch & Target Riveted Asm. 1/2" (Green) ***Asm. Parts Included :*** Stack Sw. (**180-5132-00**) **and** 1/2" Narr.Target Green (**545-5210-04**) ***Not Included, order separately:*** Switch Mounting Bracket (**535-6896-00**), Switch Back Plate (**535-6452-00**), Foam Pad (**626-5029-00**) **and** #6-32 X 3/4" HWH Swage (Zinc) (Qty. 2) (**237-5976-05**) ***Note : G-H Plastic Targets are rivted with :*** Rivet 1/8" ø X 3/16" (Qty. 1/per) (**249-5001-00**) **and** Washer 9/64" I.D. X 5/16" O.D. X .048" Thick (Zinc) (Qty. 1/per) (**242-5017-00**)	1	515-5967-04
i-23	Switch *(for Shooter Lane)* ***Associated Part Not Included :*** Switch Mounting Bracket (**535-6173-00**) **Bracket secured to Playfield by:** #6 X 1/2" SHWH AB (Zinc) (Qty. 2) (234-5001-02) *Also see Section **4**, Chapter **2**, (**Blue Pages**): Shooter Lane Switch Assembly, Page **66**.*	1	180-5157-00
J-#	Switch Asm., Stack (Blade) *(for Pops)* ***Assembly Parts Included :*** Switch (**180-5015-04**), Sw. Mounting Bracket (**535-7342-00**), Spoon Actuator (**545-5610-02**), Switch Body Protect Plate (**535-7344-00**), Diode 1N4004 (Qty. 1/per) (**112-5003-00**) **and** #6-32 X 3/4" HWH Zc (Qty. 2/per) (**237-5976-05**) **Bracket secured to Playfield by:** #8 X 1/2" SHWH AB (Z) (Qty. 2) (234-5101-00) *Also see Section **4**, Chapter **2**, (**Blue Pages**): Bumper Switch Individual Parts ..., Page **71**.* *Switch Matrix Numbers **30**, **31** & **32***	3	515-6459-09
K-#	Switch *(Roller Actuator, Lite-Force)* ***Associated Parts Not Included :*** Heat Shrink Tubing 1/8" ø PUI-24 (Qty. 1" per) (**605-5006-00**) **and** Diode 1N4004 (Qty. 1/per) (**112-5003-00**) **Item K-# is secured by:** #2-56 X 1/2" Unslt HWH #4 Hex TR3 Blk (Qty. 2/per) (237-5937-02) *Also see Section **4**, Chapter **2**, (**Blue Pages**): 4-Ball Trough Assembly, Page **67**.* *Switch Matrix Numbers **18**, **19** & **20***	3	180-5119-02
L-#	Switch (End-of-Stroke), Stack (Blade) **Item L-# is secured by:** #6-32 X 5/8" SHWH Swage (Serr.) Zinc (Qty. 2/per) (237-5976-04) *Also see Section **4**, Chapter **2**, (**Blue Pages**): ... Flipper Assemblies, Pages **68-69**.* *Dedicated Switch Numbers **D10** & **D12***	2	180-5149-00
M-#	Switch, Stack *(Blade)* ***Associated Parts Not Included :*** Switch Body Protect Plate (Qty. 1/per) (**535-5045-00**) **and** Diode 1N4004 (Qty. 1 for every 2 connected together) (**112-5003-00**) **Item M-# is secured by:** #6-32 X 5/8" HWH Swage (Ser.) Zinc (Qty. 2/per) (237-5976-04) *Also see Section **4**, Chapter **2**, (**Blue Pages**): Slingshot Assemblies (Qty. 2/per), Page **72**.* *Switch Matrix Numbers **26** & **27** (Dual Switches = Slingshots)*	4	180-5054-00
N-64	Switch *(Sim. Roller Actuator)* VUKs *Also see Section **4**, Chapter **2**, (**Blue Pages**): Vertical Up-Kicker Assembly, Page **75**.*	1	180-5209-00
O-13	Switch *(Happ #95-1128-00)* *Also see Section **4**, Chapter **2**, (**Blue Pages**): TV Eject (Scoop) Assembly, Page **74**.*	1	180-5189-00
P-49	Switch *Also see Section **4**, Chapter **2**, (**Blue Pages**): Brian Beer Can Assembly, Page **86**.*	1	180-5189-00
Q-#	Switch *(1-1/4" Actuator Blade)* *Also see Section **4**, Chapter **2**, (**Blue Pages**): Up/Down Post Assembly, Page **73**.* *Switch Matrix Number **1** & **2***	2	180-5010-04
R-21	Dual OPTO TRANS PC Board Asm. ***Assembly Parts Included :*** Dual OPTO Trans. PCB (Qty. 1) (**520-5173-00**), OPTO PCB Tube Spacer (Brass) (Qty. 3) (**530-5308-02**) **and** Rubber Grommet (Qty. 3) (**545-5518-00**)	1	515-0173-00
S-22	Dual OPTO REC PCB Assembly ***Assembly Parts Included :*** Dual OPTO Rec. PCB (Qty. 1) (**520-5174-00**), OPTO PCB Tube Spacer (Brass) (Qty. 3) (**530-5308-02**) **and** Rubber Grommet (Qty. 3) (**545-5518-00**) **Items R-#–S-# are secured by:** #6-32 X 5/8" HWH Sw. (Ser.) Zc. (Qty. 3/per) (237-5976-04) *Also see Section **4**, Chapter **2**, (**Blue Pages**): 4-Ball Trough Assembly, Page **67**, or see Section **5**, Chapter **4**, (**Yellow Pages**): Trough Up-Kicker Dual OPTO PCBs, Pages **109-111**.* *Switch Matrix Numbers **21** & **22** **Switch Note:** Both **R** & **S** PCBs required per switch.*	1	515-0174-00
T-9	PCB, OPTO Interrupter Asm. (1-Bank) *Switch Matrix Number **9***	1	520-5252-01
U-#	PCB, OPTO Interrupter Asm. (4-Bank) *Also see Sec. **4**, Chp. **2**, (**Blue Pages**): 1- & 4-Bank Drop Target Asm., see T.O.C., Page **65**, or see Section **5**, Chapter **4**, (**Yellow Pages**): OPTO Interrupter PCBs, Pages **138-139**.* *Switch Matrix Numbers **44**, **45**, **46** & **47***	1	520-5252-04

example:

"G-#" means, it is Item Number A-# in the Part Table. The "-#" indicates more than 1 switch is present. So it is replaced with the Switch's "Switch Matrix Number" (e.g. G-1, Item G Switch and one of the Switches referenced is from Switch Matrix Number 1).

If only 1 switch type for the item exists, the Switch Number will be listed with the Item Number (e.g. J-23, Item J Switch and the Switch Matrix Number is 23).

For Mini-Playfield (500-7018-00) Switches & PCBs, see the end of the Blue Pages (Section 4, Chapter 2).

P/F Top - Flat Rails ☐ & Ramp Asm. ☐ Wood Rails ■, Ball Guides ■, Wire Forms & Wire Ramp ■

Nr.	FLAT RAILS	QTY.	SPI PART Nr.
FR1–FR7	*Flat Rails #1 – #7 are located on the Mini-Playfield. See Sec. 4, Chp. 2.*	1	535-9923-01 – 535-9923-07
FR8	Flat Rail #8 *Not Used*	0	Not Used
FR9	Flat Rail #9 *Not Used*	0	Not Used
FR10	Flat Rail #10	1	535-9923-10
	Item FR10 is secured by: ■ (Qty. 2) **and** ⌘ (Qty. 2)		
FR11	Flat Rail #11	1	535-9923-11
FR12	Flat Rail #12	1	535-9923-12
	Item FR11 & FR12 are secured by: ■ (Qty. 2/per)		
FR13	Flat Rail #13	1	535-9923-13
	Item FR13 is secured by: ■ (Qty. 5), ◆ (Qty. 1) **and** ❖ (Qty. 1)		
FR14	Flat Rail #14	1	535-9923-14
	Item FR14 is secured by: ■ (Qty. 1), ◆ (Qty. 1) **and** ❖ (Qty. 1)		
FR15	Flat Rail #15	1	535-9923-15
	Item FR15 is secured by: ■ (Qty. 3), ◆ (Qty. 2) **and** ❖ (Qty. 2)		
FR16	Flat Rail #16	1	535-9923-16
	Item FR16 is secured by: ◆ (Qty. 2) **and** ❖ (Qty. 2)		
FR17	Flat Rail #17	1	535-9923-17
	Item FR17 is secured by: ■ (Qty. 3) **and** ⌘ (Qty. 1)		
FR18	Flat Rail #18	1	535-9923-18
	Item FR17 is secured by: ⌘ (Qty. 1), ◆ (Qty. 1) **and** ❖ (Qty. 1)		
FR19	Flat Rail #19	1	535-9923-19
	Item FR19 is secured by: ◆ (Qty. 2) **and** ❖ (Qty. 2)		
FR20	Flat Rail #20	1	535-9923-20
	Item FR19 & FR20 are secured by: ◆ (Qty. 2/per) **and** ❖ (Qty. 2/per)		
FR21	Flat Rail #21 Assembly	1	515-7607-21
	Item FR15 is secured by: ■ (Qty. 1), ◆ (Qty. 5) **and** ❖ (Qty. 5) *Ref. Only: 535-9923-21A & 535-9923-21B*		
FR22	Flat Rail *(Bottom Arch Drain)*	1	535-8393-00
	Item FR22 is secured by: ■ (Qty. 4)		
FR23	Flat Ramp & Flap Assembly	1	510-5006-00
	Items FR23 is secured by: #4 X 5/8" PFH (Black) (Qty. 2) (237-5833-00)		

Nr.	WOOD RAILS	QTY.	SPI PART Nr.
WR1	Wood Rail, 42"	2	525-5007-59
	Items WR1 is secured by: #6 X 1-1/4" PFH A (Zinc) (Qty. 12) (237-5804-00)		

Nr.	BALL GUIDES	QTY.	SPI PART Nr.
BG1	Ball Guide, Return Left (Bracket)	1	535-9905-00
BG2	Ball Guide, Return Right (Bracket)	1	535-9906-00
BG3	Ball Guide, 3.0" X 0.12" ø	1	535-5356-04
BG4	Ball Guide, 1.5" X 0.12" ø	1	535-5356-20
BG5	Ball Guide, Outlane Fence Left	1	535-9979-00

Nr.	WIRE FORMS	QTY.	SPI PART Nr.
WF1	Wire Form *(Newton Ball Retention)*	2	535-9522-00
WF2	Wire Form *(on Gate Bracket)*	1	535-5307-02
	For Wire Forms on Roll-Under Switch Gates or 1-Way Gates, see Previous Page ***50****.*		

Nr.	WIRE RAMP	QTY.	SPI PART Nr.
WR1	Wire Ramp *(Exit into Left Return)*	1	535-9920-00
	For a 3D view, see Sec. ***4****, Chp.* ***2****, Drawings ... Assemblies & Ramps (**Blue Pages**), Pg.* ***84****.*		

Take Note:

Legend Note:
Items noted with a white square ☐ are Flat Rails & Ramp Asm.
Items noted with a magenta square ■ are Wood Rails.
Items noted with a red square ■ are Ball Guides *(Snubber Wires)*
Items noted with a cyan square ■ are Wire Forms & Wire Ramp.

■ #8 X 1/2" SHWH AB (Zinc) (234-5101-00)
❖ #8-32 Nylon Stop Nut (240-5102-00)
◆ #8 Washer (242-5005-00)
☒ #6-32 X 7/8" Fin Shank Screw (237-5921-04)
⌘ #6-32 X 1/2" PTH A (Zinc) (237-5809-00) *into Wood Rail.*

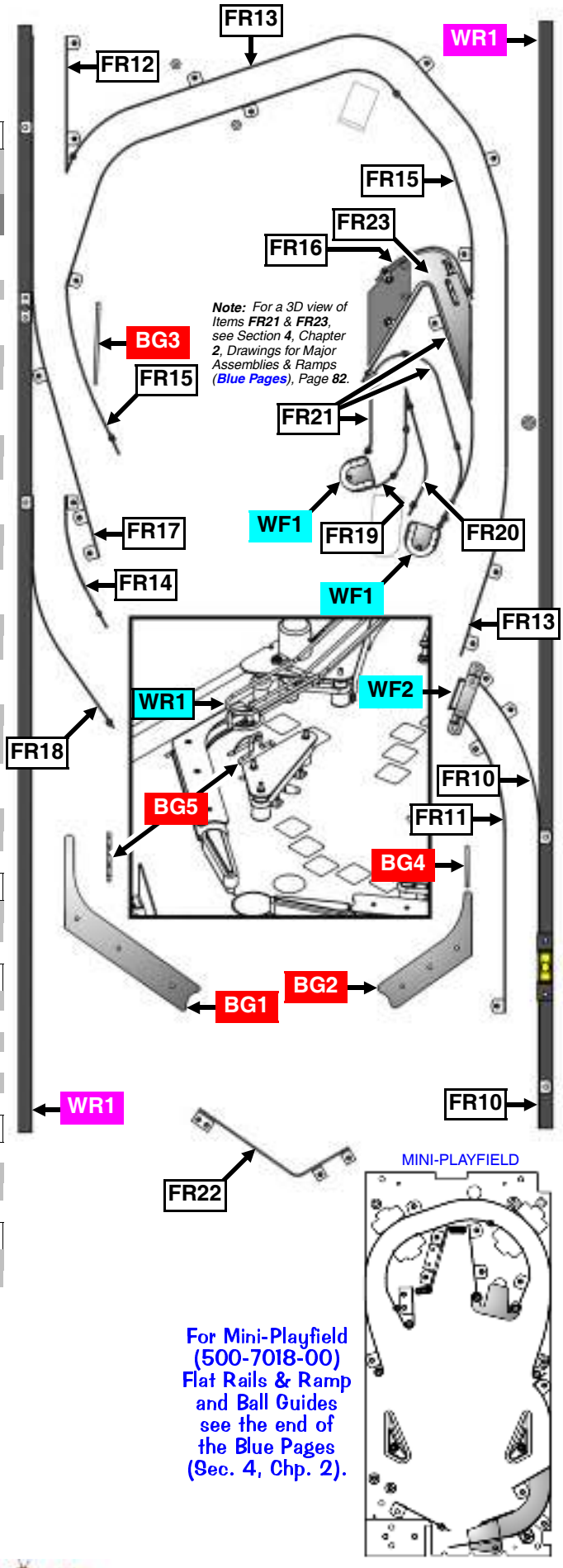

For Mini-Playfield (500-7018-00) Flat Rails & Ramp and Ball Guides see the end of the Blue Pages (Sec. 4, Chp. 2).

Sec. 4: Parts Id. ...

Playfield Top - Plastics (Screened & Clear) Kit, Decals* & Mylar* Kits ‡

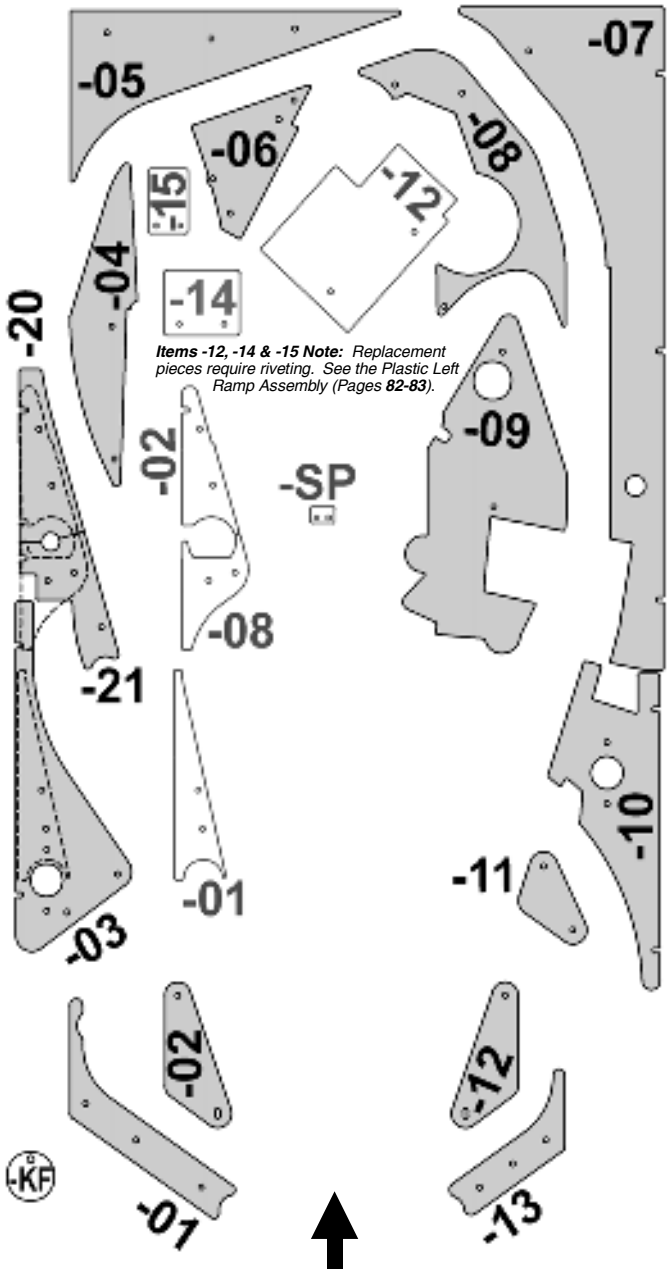

Items -12, -14 & -15 Note: *Replacement pieces require riveting. See the Plastic Left Ramp Assembly (Pages **82-83**).*

803-5000-**93** ***Kit (Plastics) includes:***
Screened & Clear Sets (830-6054-XX, 830-6062-XX† and 830-6063-00).

*† **Note : -13** from 830-6062-XX Sheet is transfered to the 803-5001-93 Enclosure*

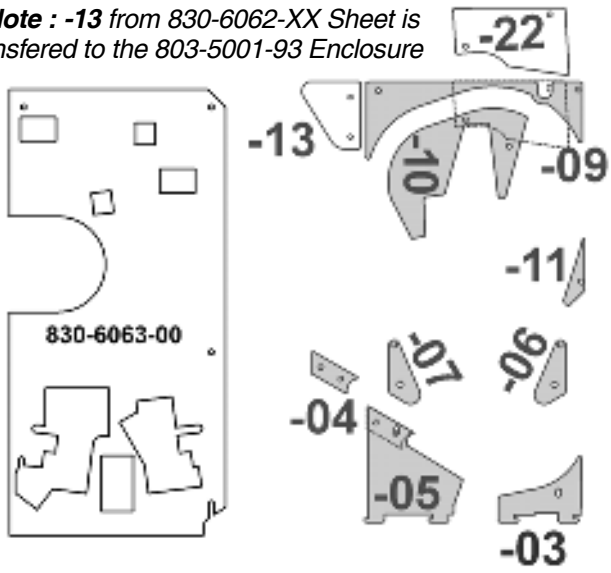

803-5001-**93** ***Kit (Plastics) includes:***
Enclosure Set (830-6061-XX & † 830-6062-13)
Mini-Playfield Enclosure
(requires riveting and reuse of the existing brackets).
To order preassembled, use part number 510-5011-00 in lieu of kit.

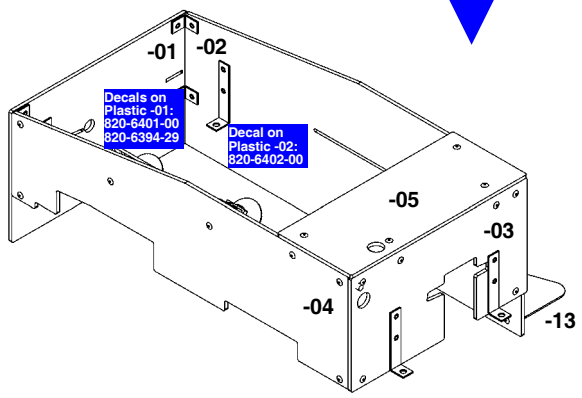

For details on the Mini-Playfield (500-7018-00) Enclosure Assembly, see the end of the Blue Pages (Section 4, Chapter 2, Page 94).

‡ ***Attention:*** *No individual Plastic or Decal can be ordered separately, unless noted otherwise.*
Plastics & Decals are subject to change without notice during and / or after production. Shapes and / or Screening may change. Pieces can be added or subtracted. Service Bulletin(s) will announce any critical changes, if warranted.

Plastics & Decals Note: *Key Fobs subject to availability and may or may not be included in the plastic set. All designs, shapes and pieces used subject to change without notice. Kit contents subject to change.*

* ***Decals/Mylar Not Shown***

Note:
*The following decals **are not included** in the Enclosure Plastics Kit, 803-5001-93, the Kit (Decals) must be ordered & applied separately:*
820-6401-00 [Stewie Pinball] affix onto 830-6061-01 [Front]
820-6402-00 [Jackpot] affix onto 830-6061-02 [Left Side]
820-6394-29 Inside Front Plastic Protector from Front OPTO Bracket

802-5000-**93** ***Kit (Decals*) includes:***
Decal Sets (820-6394-XX, 820-6403-00 (-SMF), 820-6403-01 (-SMT), 820-6401-00 (Stewie Pinball Front), 820-6402-00 (Stewie Pinball Left Side Jackpot)

802-5002-**93** ***Kit (Mylar*) includes:***
*Full Playfield Mylar (820-5999-93) **Not Shown***

Playfield Top & Bottom - Metal Posts □ & Fin Shank Screws ■ (Actual Size) †

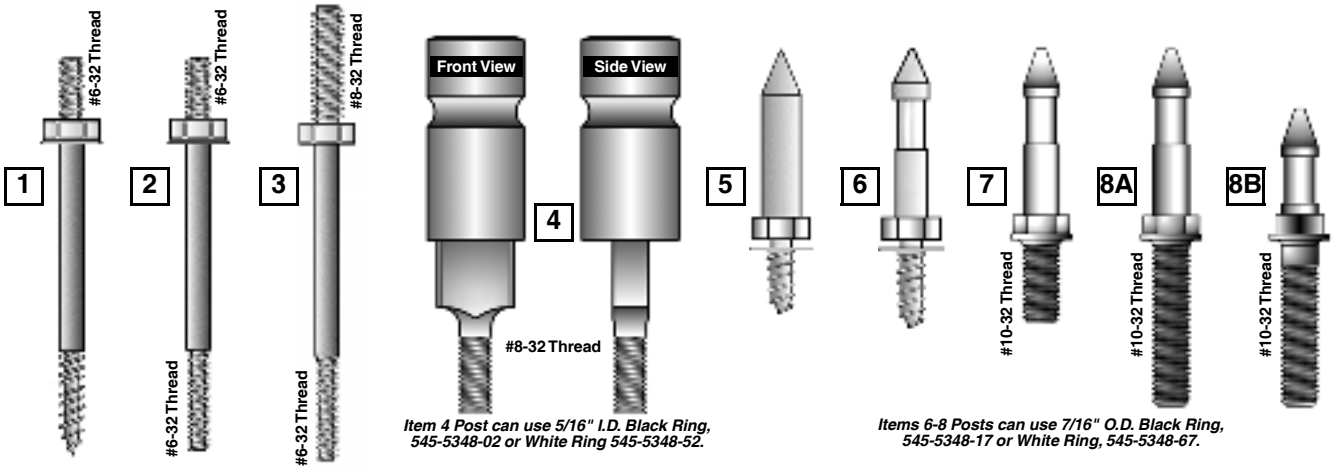

Item 4 Post can use 5/16" I.D. Black Ring, 545-5348-02 or White Ring 545-5348-52.

Items 6-8 Posts can use 7/16" O.D. Black Ring, 545-5348-17 or White Ring, 545-5348-67.

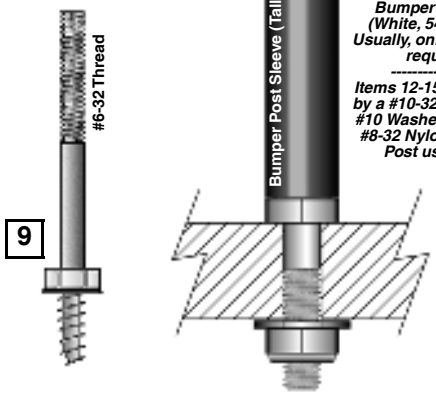

Items 11-16 & 18 Posts can use a Black Bumper Post Sleeve (Tall), 545-5308-00 (White, 545-5308-08 or Red, 545-5308-22) Usually, only Posts which are in the ball path require a Bumper Post Sleeve.

Items 12-15 & 18 Posts are typically secured by a #10-32 Nylon Stop Nut, 240-5203-00 and #10 Washer, 242-5003-00 (Item 11 Post use a #8-32 Nylon Stop Nut, 240-5102-00; Item 16 Post use a #8-32 T-Nut, 240-5101-00).

Take Note:

Legend Note:
Items noted with a white square □ are Metal Posts. Items noted with a black square ■ are Fin Shank Screws.

A & B ***Items A & B Note:*** *Typically used to secure Hex Spacers onto the Playfield Wood or Back Panel.*

C ***Item C Note:*** *Quantity 4 on bottom Cabinet Speaker Grill (Qty. 4) (also requires #6-32 Nylon Stop Nut, 240-5005-00).*

D ***Item D Note:*** *Quantity 3/per on the Coil Bracket Welded Assembly (515-5939-00) in the Bumper Bottom Assembly (515-6459-04).*

A - D ***Items A-D Note:*** *The "Fins" keep the screw from turning inside the wood hole.*

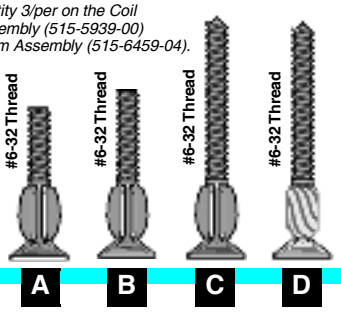

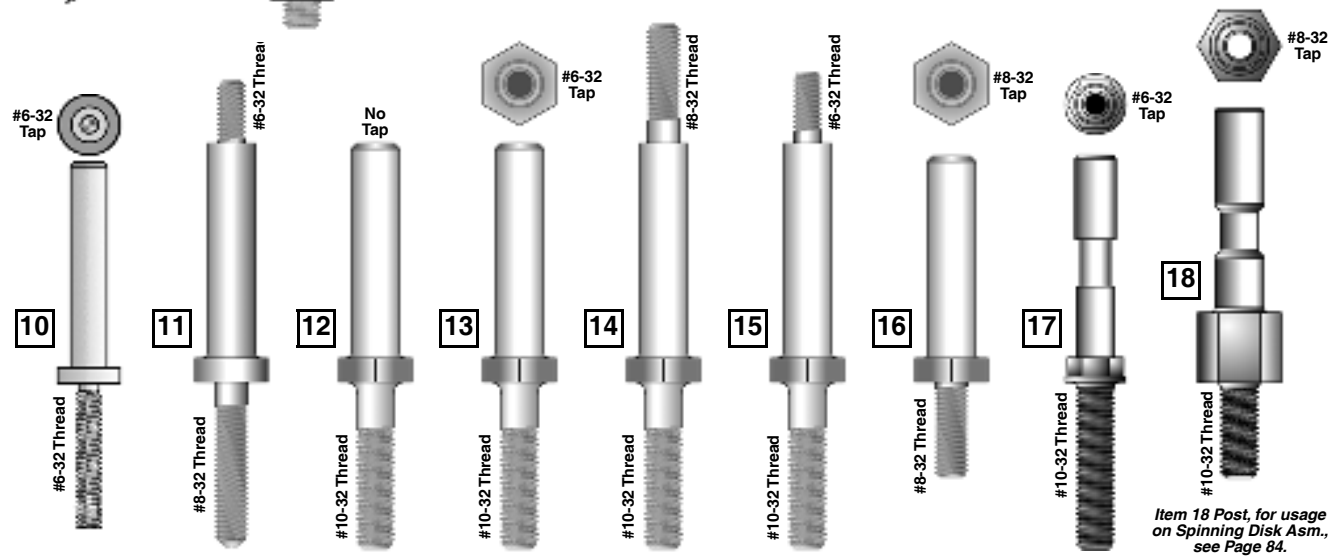

Item 18 Post, for usage on Spinning Disk Asm., see Page 84.

Nr.	METAL POSTS	QTY.	SPI PART Nr.
1	Post [Fasten] #6-32 Thread // Wood Scr.	6/4	530-5010-02
2	Post [Fasten] #6-32 Thread // #6-32 Thread	13	530-5012-02
3	Post [Fasten] #8-32 Thread // #6-32 Thread	1	530-5008-00
4	Post Brass [Adjustable, Sliding] #8-32 Thread	1	530-5621-00
5	Mini-Post Wood Screw (no cut-away)	2	530-5004-01
6	Mini-Post Wood Screw		530-5004-00
7	Mini-Post MS // #10-32 .4" Thread		530-5005-01
8A	Mini-Post MS // #10-32 .875" Thread	14	530-5005-00
8B	Mini-Post Short MS // #10-32 .875" Thread	0/5	530-5749-00
9	Post [Fasten] #6-32 Thread // Wood Screw		530-5263-01
10	Post #6-32 Tap // #6-32 Thread		530-5127-00
11	Post [Fasten] #6-32 Thread // #8-32 Thread		530-5007-00
12	Post [Hex Base] NO TAP // 10-32 Thread		530-5332-00
13	Post [Hex Bs.] #6-32 TAP // #10-32 Thread		530-5332-01
14	Post [Hex Bs.] #8-32 Thread // #10-32 Thread		530-5332-02
15	Post [Hex Bs.] #6-32 Thread // #10-32 Thread		530-5332-03
16	Post [Hex Bs.] #8-32 TAP // #8-32 Thread		530-5332-04
17	Post [Hex Bs.+Groove] #6-32 TAP // #10-32 Thr.	1	530-5679-00
18	Post [Hex Bs.+Groove] #8-32 TAP // #10-32 Thr.		530-5753-00

Nr.	FIN SHANK SCREWS	QTY.	SPI PART Nr.
A	#6-32 X 3/4" Fin Shank Screw		237-5921-02
B	#6-32 X 7/8" Fin Shank Screw		237-5921-04
C	#6-32 X 1¼" Fin Shank Screw	(4)	237-5883-00
D	#6-32 X 1 3/16" Spiral Fin Shank Screw	8	237-5957-00

Note: *# / x X = Mini-Pinball Qty. See Pages **90–94**.*

† *The item type (size / description), the quantity and/or location used, are subject to change without notice. Service Bulletins will announce any changes, if warranted.*

Playfield Top & Bottom - Metal Posts □ & Fin Shank Screws ■ Continued

For Mini-Playfield (500-7018-00) Metal Posts, see the end of the Blue Pages (Sec. 4, Chp. 2).

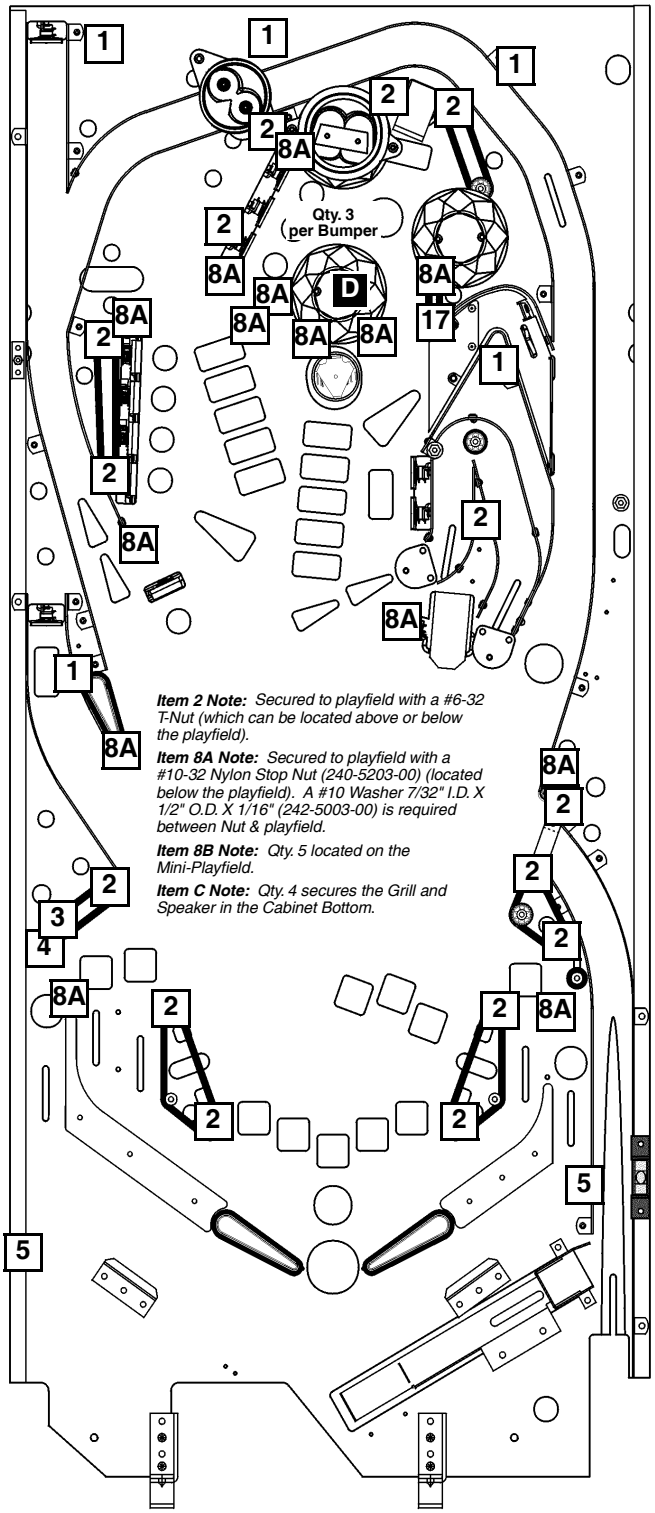

Take Note:

Legend Note:
Items noted with a white square □ are Metal Posts.
Items noted with a black square ■ are Fin Shank Screws.

† *The item type (size / description), the quantity and/or location used, are subject to change without notice. Service Bulletins will announce any changes, if warranted.*

Playfield Top & Bottom - Nylon Stop, KEPS, Hex, T-, Flange, Pal & Wing Nuts* (Actual Size) †

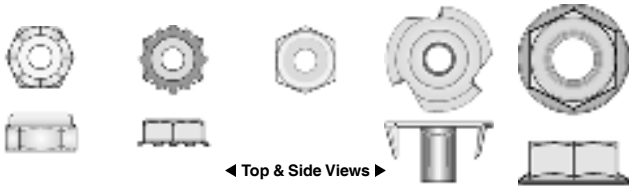

N1 K1 H1 T1 F1

Nr.	NYLON STOP NUTS*	QTY.	SPI PART Nr.
N1	#6-32 Nylon Stop Nut	59/4	240-5005-00
N2	#6-32 N.S. Nut *(with 1/4" Hex Body)*		240-5010-00
N3	#8-32 Nylon Stop Nut	32/5	240-5102-00
N4	#10-32 Nylon Stop Nut	19/5	240-5203-00
N5	#10-24 Nylon Stop Nut	2	240-5206-00
*Item **N5** used with #10-24 X 1-3/4" Carriage Bolt Square Neck Black (231-5022-00) located in the Cabinet for the Roto Lock (Male) (355-5006-01).*			
N6	#4-40 Nylon Stop Nut		240-5303-00
N7	#4-40 *(18/8 Stainless)* Nylon Stop Nut		240-5303-01
N8	5/16"-18 Nylon Stop Nut		240-5316-00

Nr.	KEPS NUTS*	QTY.	SPI PART Nr.
K1	#6-32 Keps Nut *(with Star Washer)*	7	240-5008-00
K2	#6-32 Keps Nut *(with 1/4" Hex Body)*		240-5011-00
K3	#8-32 Keps Nut		240-5104-00
K4	#10-32 Keps Nut	1	240-5208-00
K5	#10-24 Keps Nut	14	240-5207-00
K6	#4-40 Keps Nut		240-5318-00

Nr.	HEX NUTS*	QTY.	SPI PART Nr.
H1	#6-32 Hex Nut *(No Star Washer)*	4	240-5004-00
H2	#8-32 Hex Nut		240-5103-00
H3	#10-32 Hex Nut		240-5201-00
H4	#10-24 Hex Nut	2	240-5202-00
*Item **H4** used with #10-24 X 1" Carriage Bolt Square Neck Black (231-5021-00) located in the Cabinet for the Side Armor Rear (towards Backbox).*			
H5	#10-32 X 3/8" Hex Nut		240-5209-00
H6	3/4-16 Hex Nut		240-5315-00
H7	#2-56 Hex Nut	6	240-5301-00
H8	7/8"-14 Hex Nut		240-5317-00

Nr.	T-NUTS*	QTY.	SPI PART Nr.
T1	#6-32 T-Nut	26/2	240-5002-00
T2	#6-32 T-Nut *(with Side Cut Off)*		240-5002-01
T3	#8-32 T-Nut	13	240-5101-00
T4	#10-32 *(Black Oxide)* T-Nut		240-5007-00
T5	#10-32 T-Nut *(with Side Cut Off)*		240-5205-00
T6	#10-32 X 5/16" T-Nut		240-5204-00
T7	#10-24 T-Nut		240-5200-00

Nr.	FLANGE NUT*	QTY.	SPI PART Nr.
F1	1/4" X 20 Flange Nut	10	240-5300-00
*Item **F1** used with 1/4-20 X 1-1/4 Sq. Neck Carriage Bolt Black (231-5003-00) located in the Cabinet for the SIde Armor (Front) and Pivot Hinges.*			

Nr.	PAL NUTS*	QTY.	SPI PART Nr.
P1	Plastic Pal Nut *(on Flipper Buttons)*		240-5003-00
P2	Metal Pal Nut *(on Flipper Buttons)*	2	240-5003-01

Nr.	WING NUTS*	QTY.	SPI PART Nr.
W1	#6-32 Wing Nut		240-5001-00
W2	#8-32 Wing Nut		240-5100-00
W3	#10-24 Wing Nut		240-5211-00
W4	1/4"-20 Wing Nut		240-5302-00
W5	1/4"-20 Toggle Wing		240-5324-00

* ***Not Shown:*** *Items N2-N8, K2-K6, H2-H8, T2-T7, P1-P2 & W1-W5*

Playfield Top - Hex Spacers ☐ (Actual Size) †

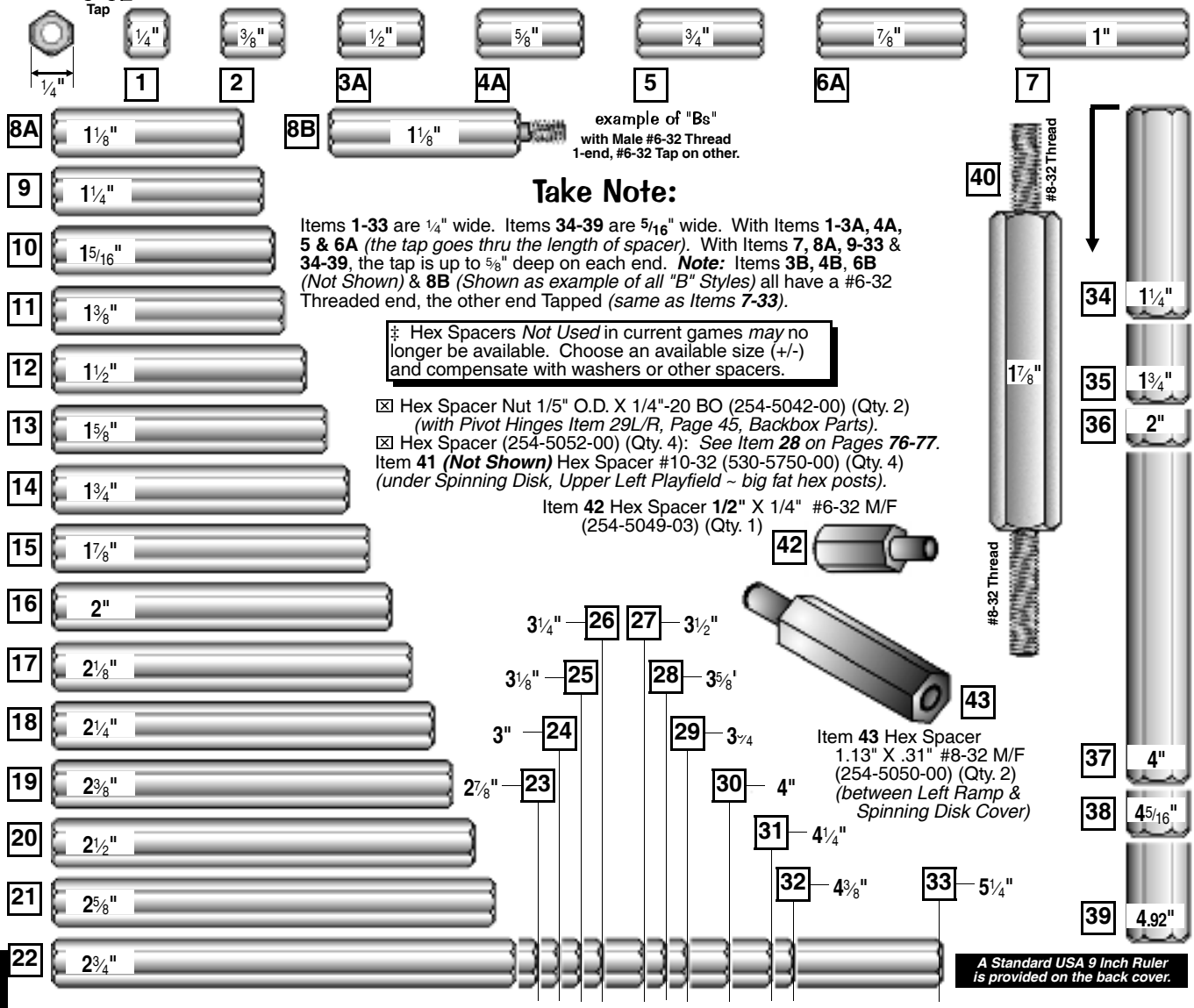

Take Note:

Items **1-33** are 1/4" wide. Items **34-39** are **5/16**" wide. With Items **1-3A, 4A, 5 & 6A** *(the tap goes thru the length of spacer).* With Items **7, 8A, 9-33** & **34-39**, the tap is up to 5/8" deep on each end. ***Note:*** Items **3B, 4B**, **6B** *(Not Shown)* & **8B** *(Shown as example of all "B" Styles)* all have a #6-32 Threaded end, the other end Tapped *(same as Items **7-33**).*

‡ Hex Spacers *Not Used* in current games *may* no longer be available. Choose an available size (+/-) and compensate with washers or other spacers.

☒ Hex Spacer Nut 1/5" O.D. X 1/4"-20 BO (254-5042-00) (Qty. 2) *(with Pivot Hinges Item 29L/R, Page 45, Backbox Parts).*
☒ Hex Spacer (254-5052-00) (Qty. 4): *See Item **28** on Pages **76-77**.*
Item **41** ***(Not Shown)*** Hex Spacer #10-32 (530-5750-00) (Qty. 4) *(under Spinning Disk, Upper Left Playfield ~ big fat hex posts).*

Item **42** Hex Spacer **1/2"** X 1/4" #6-32 M/F (254-5049-03) (Qty. 1)

Item **43** Hex Spacer 1.13" X .31" #8-32 M/F (254-5050-00) (Qty. 2) *(between Left Ramp & Spinning Disk Cover)*

A Standard USA 9 Inch Ruler is provided on the back cover.

Nr.	HEX SPACERS		QTY.	SPI PART Nr.
1	1/4"	X 1/4" : #6-32 Tap *(both ends)*		254-5008-00
2	3/8"	X 1/4" : #6-32 Tap *(both ends)*		254-5008-12
3A	1/2"	X 1/4" : #6-32 Tap *(both ends)*	4	254-5008-03
3B*	Identical to **3A** *with #6-32 Thread end*			254-5024-03
4A	5/8"	X 1/4" : #6-32 Tap *(both ends)*		254-5008-02
4B*	Identical to **4A** *with #6-32 Thread end*			254-5024-02
5	3/4"	X 1/4" : #6-32 Tap *(both ends)*	2	254-5008-04
6A	7/8"	X 1/4" : #6-32 Tap *(both ends)*		254-5008-05
6B*	Identical to **6A** *with #6-32 Thread end*			254-5024-05
7	1"	X 1/4" : #6-32 Tap *(both ends)*		254-5008-06
8A	1 1/8"	X 1/4" : #6-32 Tap *(both ends)*	1	254-5008-17
8B	Identical to **8A** *with #6-32 Thread end*			254-5024-17
9	1 1/4"	X 1/4" : #6-32 Tap *(both ends)*		254-5008-11
10	1 5/16"	X 1/4" : #6-32 Tap *(both ends)*		254-5008-34
11 ‡	1 3/8"	X 1/4" : #6-32 Tap *(both ends)*		254-5008-33
12	1 1/2"	X 1/4" : #6-32 Tap *(both ends)*		254-5008-09
13 ‡	1 5/8"	X 1/4" : #6-32 Tap *(both ends)*		254-5008-13
14	1 3/4"	X 1/4" : #6-32 Tap *(both ends)*	1	254-5008-10
15 ‡	1 7/8"	X 1/4" : #6-32 Tap *(both ends)*	1	254-5008-20
16	2"	X 1/4" : #6-32 Tap *(both ends)*		254-5008-07
17	2 1/8"	X 1/4" : #6-32 Tap *(both ends)*		254-5008-32
18	2 1/4"	X 1/4" : #6-32 Tap *(both ends)*	1	254-5008-18

Nr.	HEX SPACERS		QTY.	SPI PART Nr.
19	2 3/8"	X 1/4" : #6-32 Tap *(both ends)*		254-5008-28
20	2 1/2"	X 1/4" : #6-32 Tap *(both ends)*		254-5008-16
21	2 5/8"	X 1/4" : #6-32 Tap *(both ends)*		254-5008-08
22	2 3/4"	X 1/4" : #6-32 Tap *(both ends)*		254-5008-15
23	2 7/8"	X 1/4" : #6-32 Tap *(both ends)*		254-5008-31
24	3"	X 1/4" : #6-32 Tap *(both ends)*		254-5008-14
25	3 1/8"	X 1/4" : #6-32 Tap *(both ends)*		254-5008-19
26	3 1/4"	X 1/4" : #6-32 Tap *(both ends)*		254-5008-26
27	3 1/2"	X 1/4" : #6-32 Tap *(both ends)*		254-5008-27
28	3 5/8"	X 1/4" : #6-32 Tap *(both ends)*		254-5008-25
29	3 3/4"	X 1/4" : #6-32 Tap *(both ends)*		254-5008-36
30	4"	X 1/4" : #6-32 Tap *(both ends)*		254-5008-21
31	4 1/4"	X 1/4" : #6-32 Tap *(both ends)*		254-5008-30
32	4 3/8"	X 1/4" : #6-32 Tap *(both ends)*		254-5008-29
33	5 1/4"	X 1/4" : #6-32 Tap *(both ends)*		254-5008-35
34	1 1/4"	X 5/16" : #6-32 Tap *(both ends)*		254-5018-09
35	1 3/4"	X 5/16" : #6-32 Tap *(both ends)*		254-5018-06
36	2"	X 5/16" : #6-32 Tap *(both ends)*		254-5018-07
37	4"	X 5/16" : #6-32 Tap *(both ends)*		254-5018-03
38	4 5/16"	X 5/16" : #6-32 Tap *(both ends)*		254-5018-00
39	4.92"	X 5/16" : #6-32 Tap *(both ends)*		254-5018-04
40	1 7/8"	X 3/8" : #8-32 *Thread (both ends)*		***530***-5285-00

† *The item type (size / description), the quantity and/or location used, are subject to change without notice. Service Bulletins will announce any changes, if warranted.*

Sec. 4: Parts Id. ...

3A ***Item 3A Note:*** *Quantity 4 on the Static Shield located on the Speaker Panel; Quantity 1 on the Display Controller PCB (both in Backbox).*

Take Note:

Legend Note:
Items noted with a white square ☐ are Hex Spacers.

† *The item type (size / description), the quantity and/or location used, are subject to change without notice. Service Bulletins will announce any changes, if warranted.*

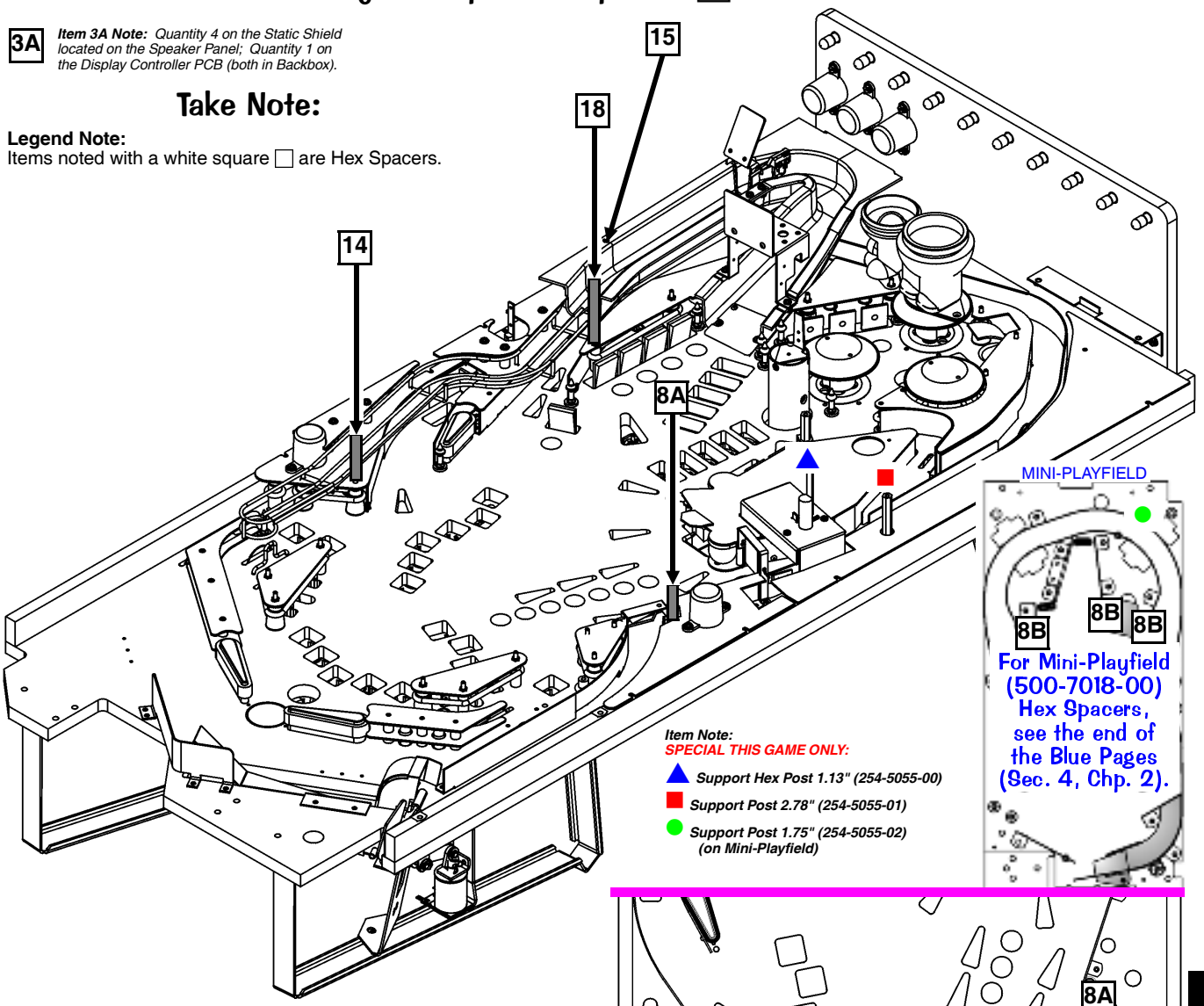

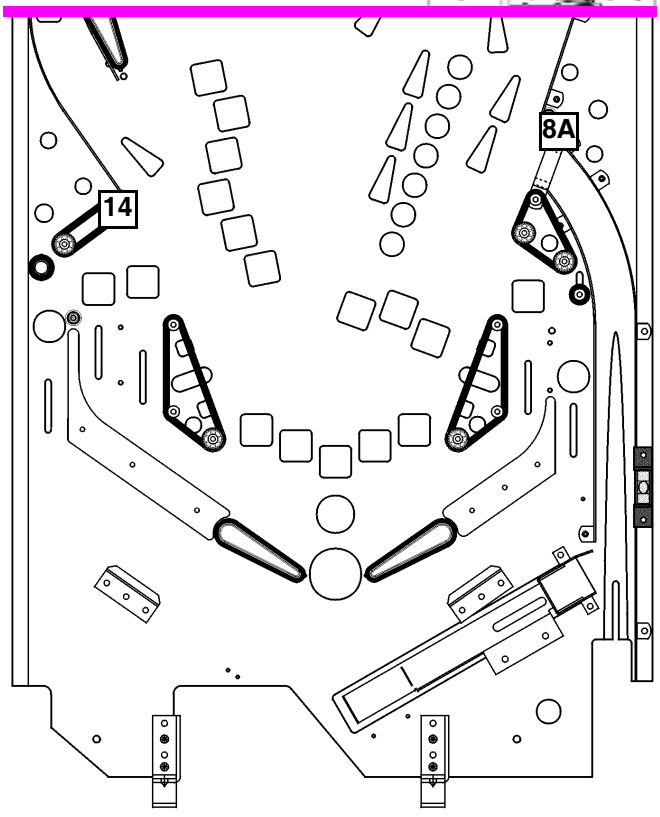

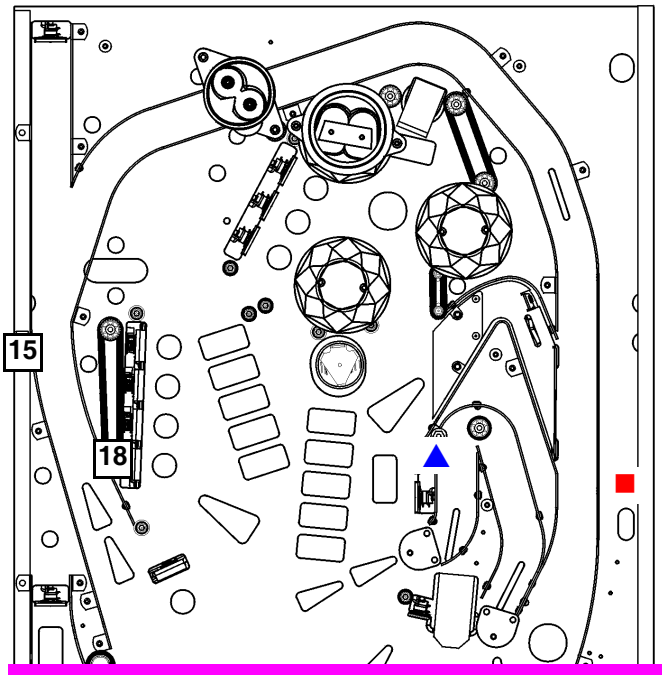

Playfield Top - Plastic Posts & Spacers ☐ & Metal Spacers ■ (Actual Size) †

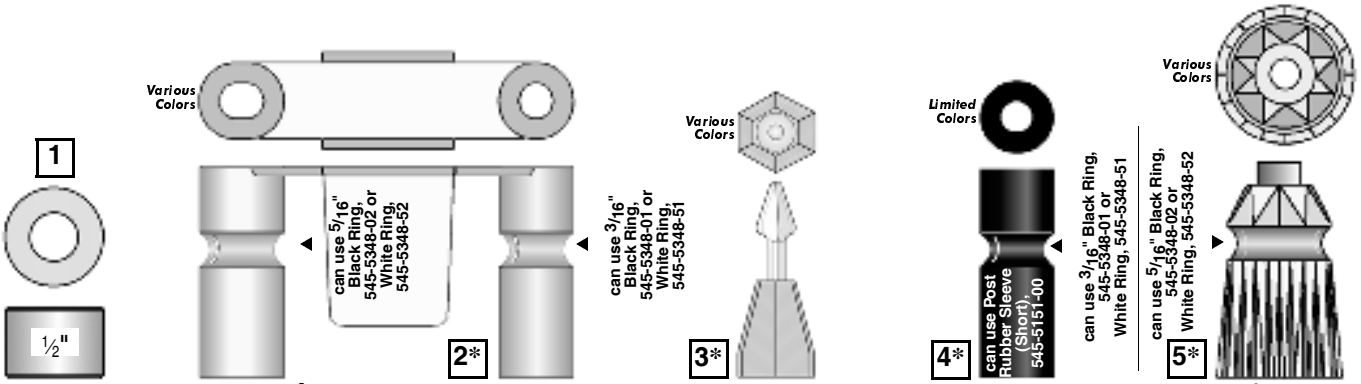

Items 4-5 Posts used in pairs can use ¾" through 3" Rubber Rings, see Rubber Parts for Part Numbers.

Take Note:

PLASTIC PART COLOR CHART

Nr.	Color	Nr.	Color	Nr.	Color
-00	Black	-06	Yellow	-12	Fluor. Blue
-01	Clear	-07	Orange	-13	Teal Green
-02	Red	-08	White	-14	Gray
-03	Amber	-09	Purple	-15	Luminescent
-04	Green	-10	Fluor. Orange	-16	Gold
-05	Blue	-11	Fluor. Green		

* Items **2 - 5** come in various colors *(may not be available in every color)*. Item **4** is currently only available in the color(s) stated in this game manual *(other colors used in prior games may no longer be available)*. The "**-XX**" or last 2-Digits in Part Nºs which come in various colors, should be replaced with the desired 2-Digit Nº from the above Color Chart. *Some colors may no longer be available for desired item.*

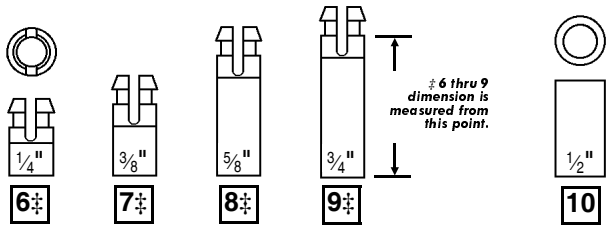

‡ Items **6** through **9** *dimensions are measured from bottom to just under the cut-away.* Item **30** *dimension* is measured from *top-to-top* of curve. *See pictorials with Items 9 & 30.*

♦ Spacer .39" I.D. X .5" O.D. X .35" Lg. (254-5048-00): See Item 8, Page 79.
❖ Spacer .26" I.D. X .38" O.D. X .47" Lg. (254-5047-00): See Sail Linkage Exploded View, Page 82.

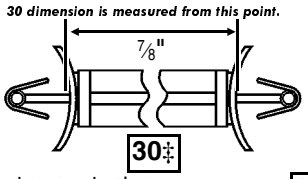

Take Note:

If any one of Items **11-23** Plastic Spacers is not available in the size required, order the smaller sized spacers required to stack sizes together until appropriate size is achieved *(e.g. If 1⅛" is needed but unavailable, order a ½" + ⅝" & stack to = 1⅛").*

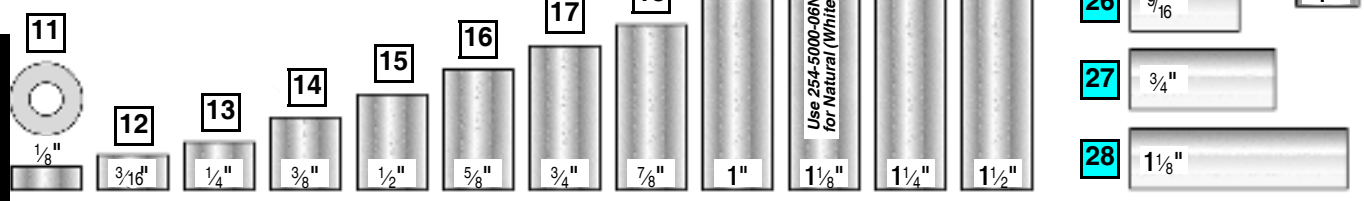

Nr.	PLASTIC POSTS & SPACERS	QTY.	SPI PART Nr.
1	⅜" X ½" Metal Spacer		530-5099-00
2**	Top Lane Plastic Mini-Lite Hood (Blue)		550-5061-05
	Item 2 typically secured by: #6-32 X 1-3/4" PPH MS (Zinc) (Qty. 2/per) (237-5511-00) **and** Washer 9/64" X 5/16" OD X 1/32" (Qty. 2/per) (242-5017-00), if used.		
3**	Mini-Jewel Plastic Post (Clear)		550-5052-01
	Item 3 typically secured by: #6 X 3/8" HWH AB (Zinc) (Qty. 1/per) (234-5000-00)		
4**	1 1/16" 1-Groove Plastic Post (Black)		550-5059-00
	1 1/16" 1-Groove Plastic Post (Clear)	14/4	550-5059-01
5**	1-Groove Jewel Plastic Post (Clear)	11	550-5034-01
	Items 4 & 5 typically secured by: Post Fastening Screw #6-32 Top / #6-32 Bottom (Qty. 1/per) (530-5012-02, Item 6 Page 69).		
6 ‡	¼" Slf. Rtn. Plastic Spacer White	4/5	254-5007-02
7 ‡	⅜" Slf. Rtn. Plastic Spacer White	*	254-5007-01
8 ‡	⅝" Slf. Rtn. Plastic Spacer White	0/4	254-5007-00
9 ‡	¾" Slf. Rtn. Plastic Spacer White		254-5007-03
10	½" X ¼" Plastic Spacer White **(Narrow)**		254-5000-03
11	⅛" X ⅜" Plastic Spacer Gray		254-5000-19
12	3/16" X ⅜" Plastic Spacer Gray	4/1	254-5000-18
13	¼" X ⅜" Plastic Spacer Gray	2/2	254-5000-02

Nr.	PLASTIC POSTS & SPACERS	QTY.	SPI PART Nr.
14	⅜" X ⅜" Plastic Spacer Gray	0/1	254-5000-12
15	½" X ⅜" Plastic Spacer Gray	0/1	254-5000-01
16	⅝" X ⅜" Plastic Spacer Gray	6	254-5000-14
17	¾" X ⅜" Plastic Spacer Gray	4/3	254-5000-07
18	⅞" X ⅜" Plastic Spacer Gray		254-5000-11
19	1" X ⅜" Plastic Spacer Gray *or* Black	2/2	254-5000-04
20	1⅛" X ⅜" Plastic Spacer Gray		254-5000-06
	1⅛" X ⅜" Plastic Spacer Natural		254-5000-06N
21	1¼" X ⅜" Plastic Spacer Gray	8	254-5000-05
22	1½" X ⅜" Plastic Spacer Gray		254-5000-08
23	1 15/16" X ⅜" Plastic Spacer Gray		254-5000-15
24	¼" X 5/16" X .144" I.D. Metal Spacer		254-5014-03
25	½" X 5/16" X .144" I.D. Metal Spacer		254-5014-00
26	9/16" X 5/16" X .144" I.D. Metal Spacer		254-5014-04
27	¾" X 5/16" X .144" I.D. Metal Spacer		254-5014-01
28	1⅛" X 5/16" X .144" I.D. Metal Spacer		254-5014-02
29	1" X 5/16" X .144" I.D. Metal Spacer		254-5001-00
30‡	⅞" Plastic Spacer Support **(Dual-Locking)**		254-5039-14

† *The item type (size / description), the quantity and/or location used, are subject to change without notice. Service Bulletins will announce any changes, if warranted.*

Note: *# / x X = Mini-Pinball Qty. See Pages **90–94**.*

Playfield Top - Plastic Posts & Spacers ☐ & Metal Spacers ■ Continued

12 13

Item 12 Note: *Quantity 4 on the Dot Matrix Display (in Backbox);*

Item 13 Note: *Quantity 2 on the Upper Left Flipper (No E.O.S. ~ requires spacer).*

Take Note:

Legend Note:
Items noted with a white square ☐ are Plastic Posts & Spacers.
Items noted with a cyan square ■ are Metal Spacers.

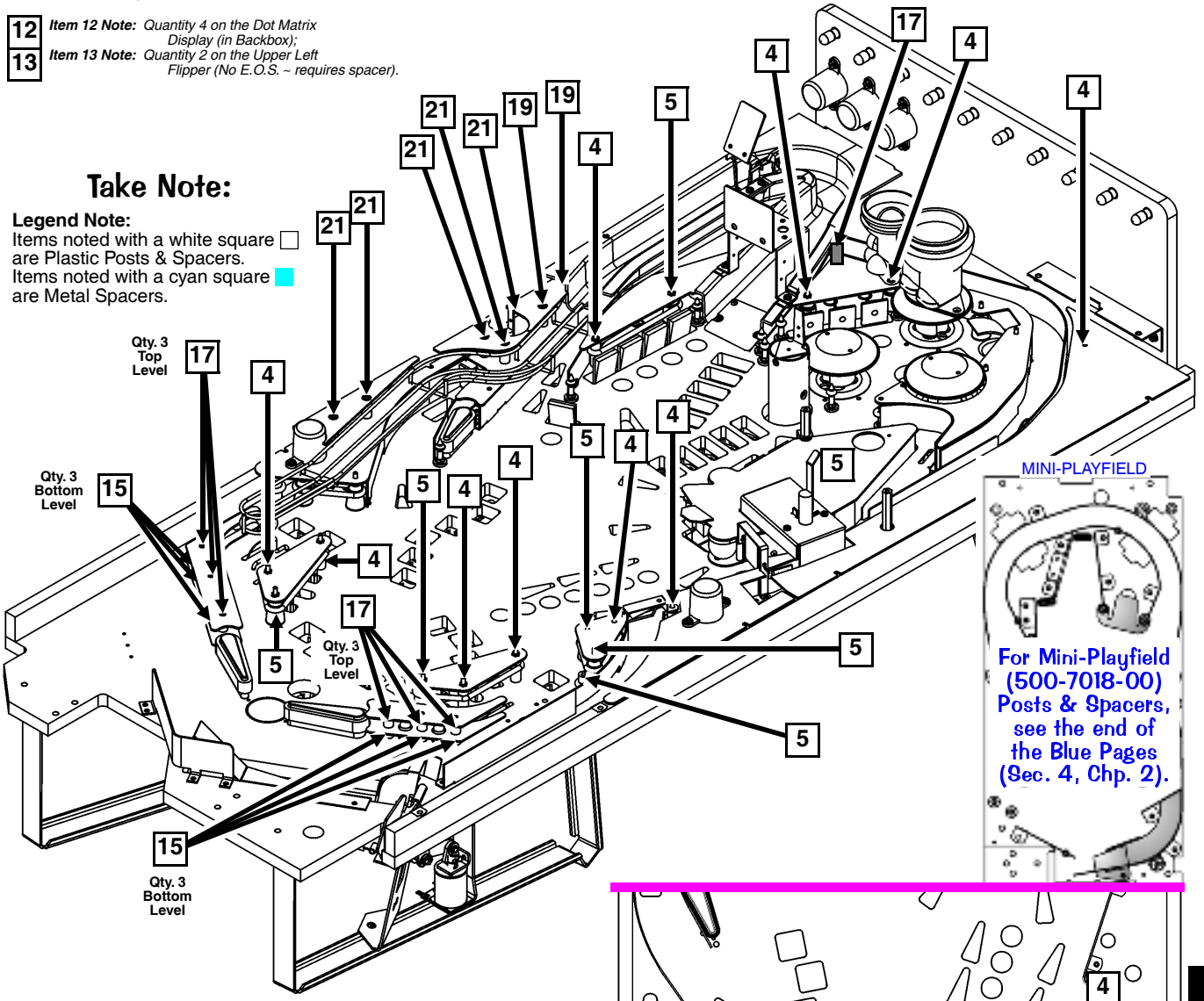

MINI-PLAYFIELD

For Mini-Playfield (500-7018-00) Posts & Spacers, see the end of the Blue Pages (Sec. 4, Chp. 2).

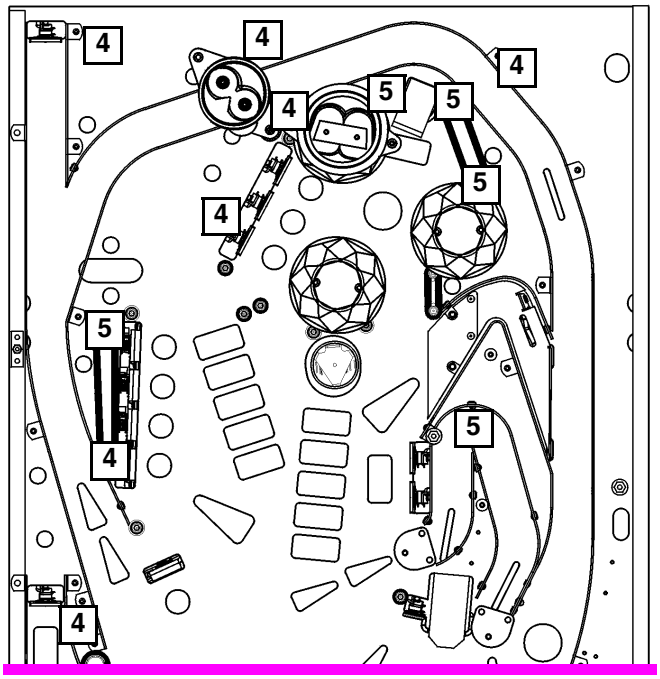

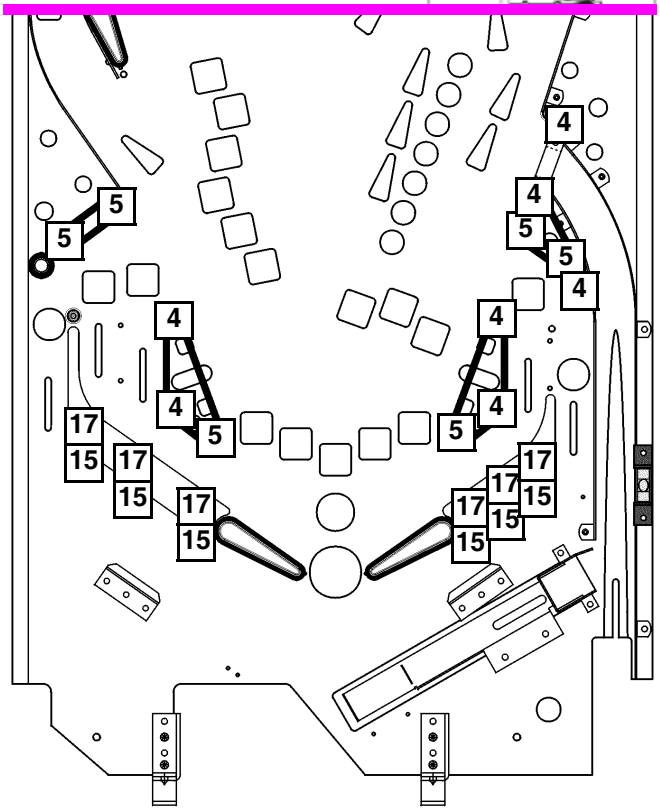

† *The item type (size / description), the quantity and/or location used, are subject to change without notice. Service Bulletins will announce any changes, if warranted.*

Sec. 4: Parts Id. ...

Playfield Top & Bottom - Rubber Parts Black ■ & White □ (Rings Actual Size) †

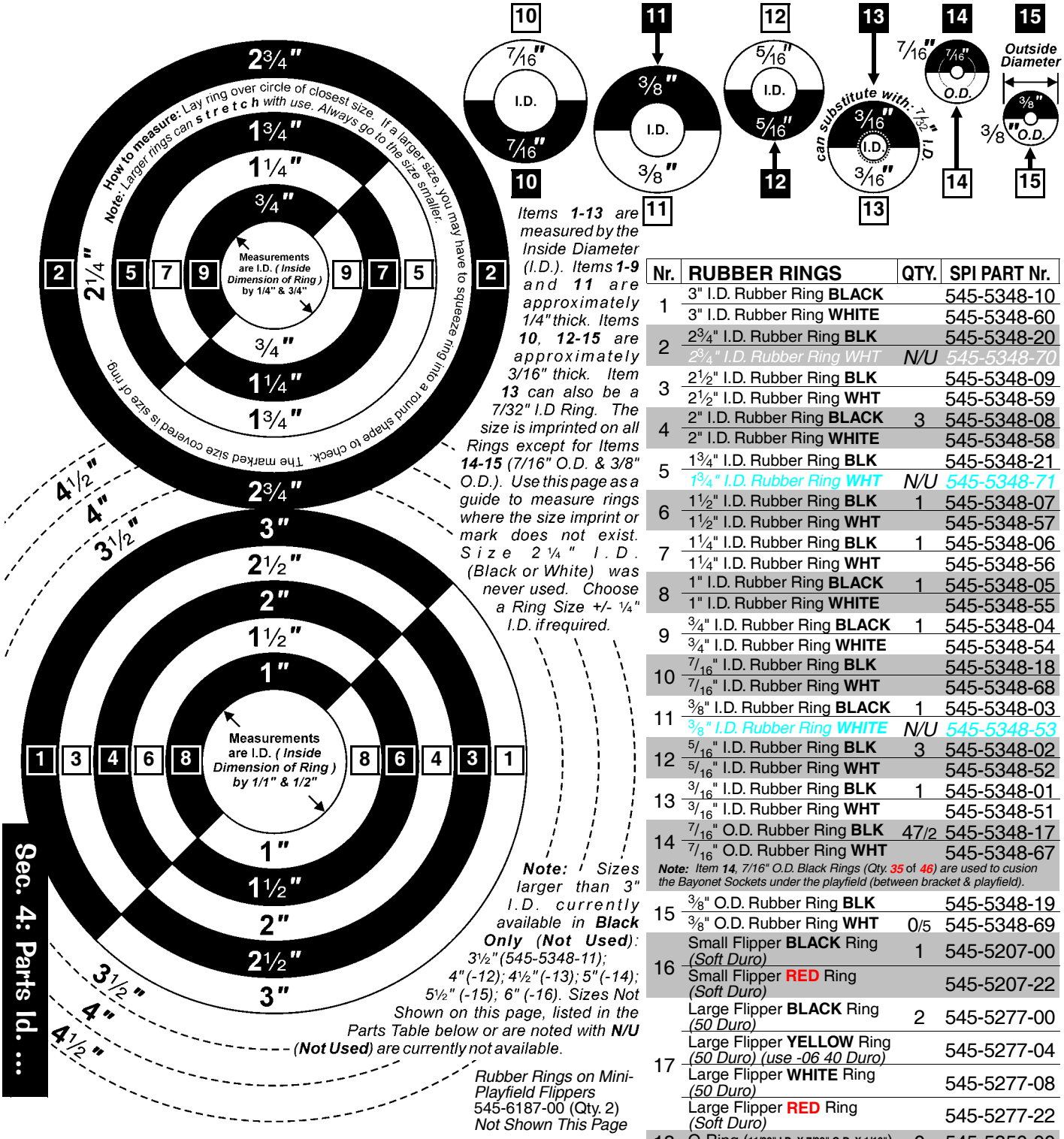

*Items **1-13** are measured by the Inside Diameter (I.D.). Items **1-9** and **11** are approximately 1/4" thick. Items **10**, **12-15** are approximately 3/16" thick. Item **13** can also be a 7/32" I.D Ring. The size is imprinted on all Rings except for Items **14-15** (7/16" O.D. & 3/8" O.D.). Use this page as a guide to measure rings where the size imprint or mark does not exist. Size 2 1/4" I.D. (Black or White) was never used. Choose a Ring Size +/- 1/4" I.D. if required.*

***Note:** Sizes larger than 3" I.D. currently available in **Black Only (Not Used)**: 3½"(545-5348-11); 4"(-12); 4½"(-13); 5"(-14); 5½" (-15); 6" (-16). Sizes Not Shown on this page, listed in the Parts Table below or are noted with **N/U** (**Not Used**) are currently not available.*

Rubber Rings on Mini-Playfield Flippers
545-6187-00 (Qty. 2)
Not Shown This Page

Nr.	RUBBER RINGS	QTY.	SPI PART Nr.
1	3" I.D. Rubber Ring **BLACK**		545-5348-10
	3" I.D. Rubber Ring **WHITE**		545-5348-60
2	2¾" I.D. Rubber Ring **BLK**		545-5348-20
	2¾" I.D. Rubber Ring WHT	*N/U*	*545-5348-70*
3	2½" I.D. Rubber Ring **BLK**		545-5348-09
	2½" I.D. Rubber Ring **WHT**		545-5348-59
4	2" I.D. Rubber Ring **BLACK**	3	545-5348-08
	2" I.D. Rubber Ring **WHITE**		545-5348-58
5	1¾" I.D. Rubber Ring **BLK**		545-5348-21
	*1¾" I.D. Rubber Ring **WHT***	*N/U*	*545-5348-71*
6	1½" I.D. Rubber Ring **BLK**	1	545-5348-07
	1½" I.D. Rubber Ring **WHT**		545-5348-57
7	1¼" I.D. Rubber Ring **BLK**	1	545-5348-06
	1¼" I.D. Rubber Ring **WHT**		545-5348-56
8	1" I.D. Rubber Ring **BLACK**	1	545-5348-05
	1" I.D. Rubber Ring **WHITE**		545-5348-55
9	¾" I.D. Rubber Ring **BLACK**	1	545-5348-04
	¾" I.D. Rubber Ring **WHITE**		545-5348-54
10	7/16" I.D. Rubber Ring **BLK**		545-5348-18
	7/16" I.D. Rubber Ring **WHT**		545-5348-68
11	3/8" I.D. Rubber Ring **BLACK**	1	545-5348-03
	*3/8" I.D. Rubber Ring **WHITE***	*N/U*	*545-5348-53*
12	5/16" I.D. Rubber Ring **BLK**	3	545-5348-02
	5/16" I.D. Rubber Ring **WHT**		545-5348-52
13	3/16" I.D. Rubber Ring **BLK**	1	545-5348-01
	3/16" I.D. Rubber Ring **WHT**		545-5348-51
14	7/16" O.D. Rubber Ring **BLK**	47/2	545-5348-17
	7/16" O.D. Rubber Ring **WHT**		545-5348-67
	***Note:** Item **14**, 7/16" O.D. Black Rings (Qty. **35** of **46**) are used to cusion the Bayonet Sockets under the playfield (between bracket & playfield).*		
15	3/8" O.D. Rubber Ring **BLK**		545-5348-19
	3/8" O.D. Rubber Ring **WHT**	0/5	545-5348-69
16	Small Flipper **BLACK** Ring *(Soft Duro)*	1	545-5207-00
	Small Flipper **RED** Ring *(Soft Duro)*		545-5207-22
17	Large Flipper **BLACK** Ring *(50 Duro)*	2	545-5277-00
	Large Flipper **YELLOW** Ring *(50 Duro) (use -06 40 Duro)*		545-5277-04
	Large Flipper **WHITE** Ring *(50 Duro)*		545-5277-08
	Large Flipper **RED** Ring *(Soft Duro)*		545-5277-22
18	O-Ring (11/32" I.D. X 7/32" O.D. X 1/16") *(Located inside Cabinet with each Flipper Button Assembly)*	0	545-5850-00

Nr.	RUBBER BUMPER PADS	QTY.	SPI PART Nr.
A*	Bumper **BLK** Pad (Lg. w/ grommet)		545-5428-00
	*Item **B** are located on Flipper Assemblies. See next page for location.*		
B*	Bumper **BLK** Pad (Sm. w/ grommet)	3/3	545-5105-00
	*Item **B** are located on multiple assemblies. See next page for location.*		

Nr.	RUBBER ... POST SLEEVES	QTY.	SPI PART Nr.
C*	Bumper **BLACK** Post Sleeve (Tall)		545-5308-00
	Item C in RED use 545-5308-22; Item C in WHITE use 545-5308-08.		
D*	Bumper Post Sleeve (Short)		545-5151-00

Take Note:

* An asterisk (*) indicates view of item on the Assembly Drawing only *(for location see next page). For better view(s), see **Drawings for Major Assemblies...** (**The Blue Pages**), Section **4**, Chapter **2**, (Page **65**), (view Table of Contents for exact page).*

Legend Note:
Items noted with a black square ■ are Black Rubber Parts.
Items noted with a white square □ are White Rubber Parts.

† *The item type (size / description), the quantity and/or location used, are subject to change without notice. Service Bulletins will announce any changes, if warranted.*

***Note:** # / x X = Mini-Pinball Qty. See Pages **90–94**.*

Item B Note:
*Located **below** ~ on three (3) assemblies:*
*4-Ball Trough (Page **67**), Scoop & VUK (Page **74**) and Eject / VUK (Page **75**)*

Take Note:

Legend Note:
Items noted with a black square ■ are Black Rubber Parts.
Items noted with a white square □ are White Rubber Parts.

† *The item type (size / description), the quantity and/or location used, are subject to change without notice. Service Bulletins will announce any changes, if warranted.*

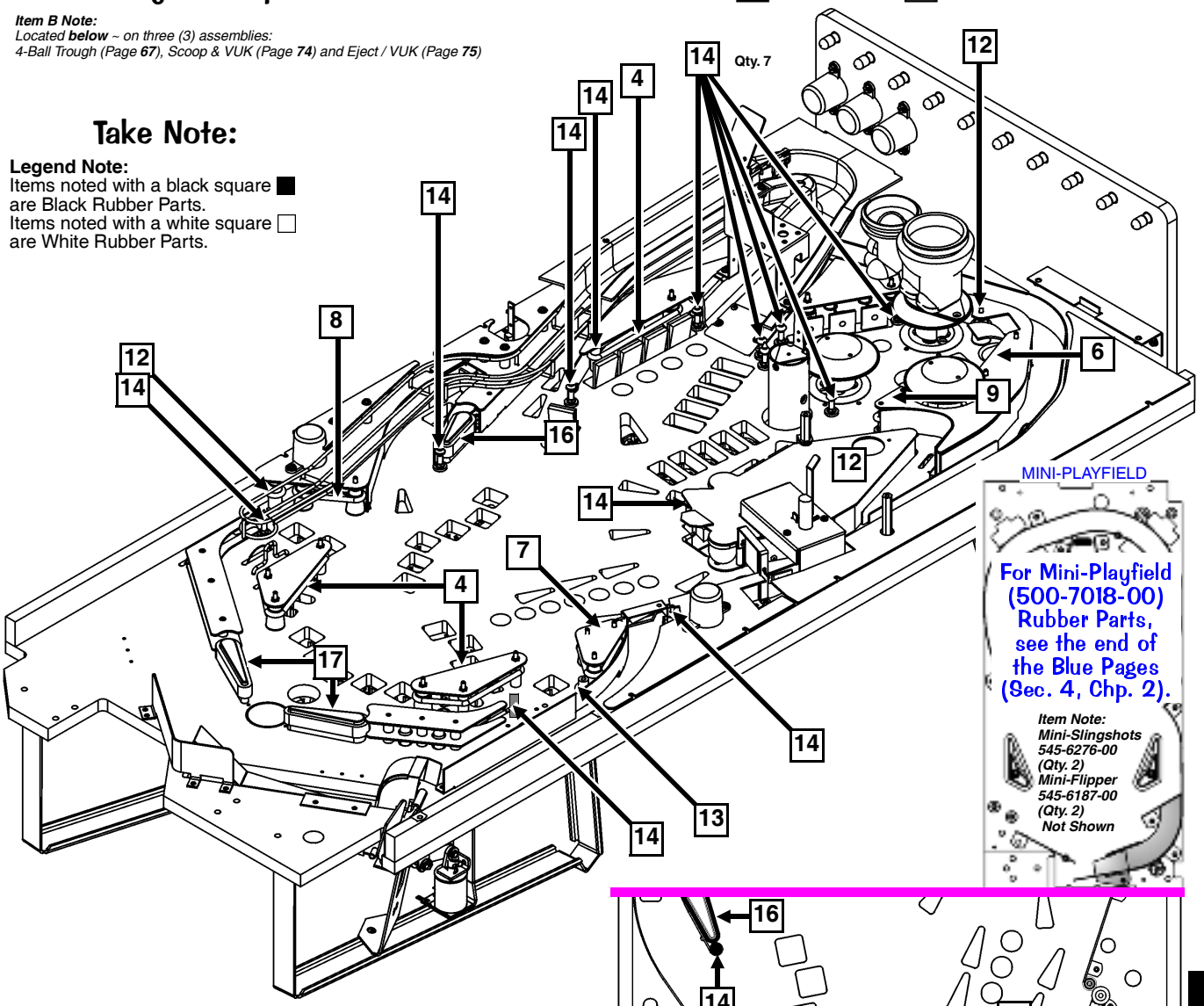

MINI-PLAYFIELD

For Mini-Playfield (500-7018-00) Rubber Parts, see the end of the Blue Pages (Sec. 4, Chp. 2).

Item Note:
Mini-Slingshots
545-6276-00
(Qty. 2)
Mini-Flipper
545-6187-00
(Qty. 2)
Not Shown

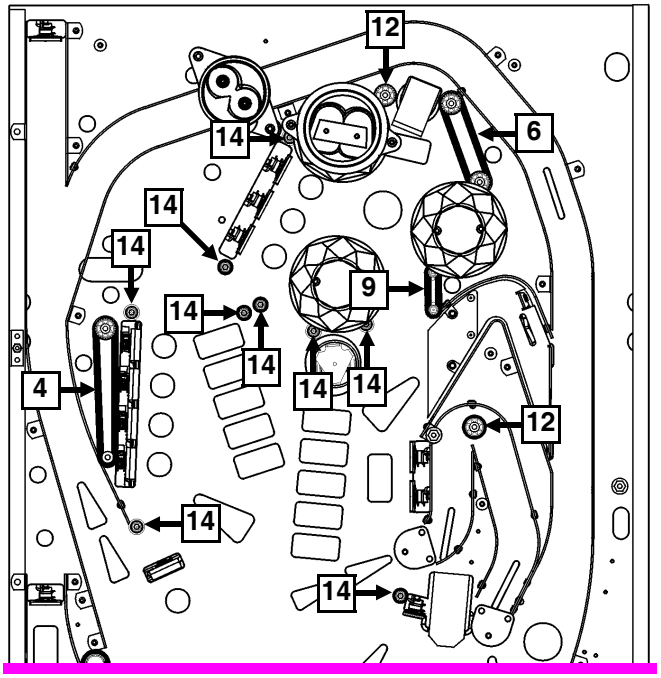

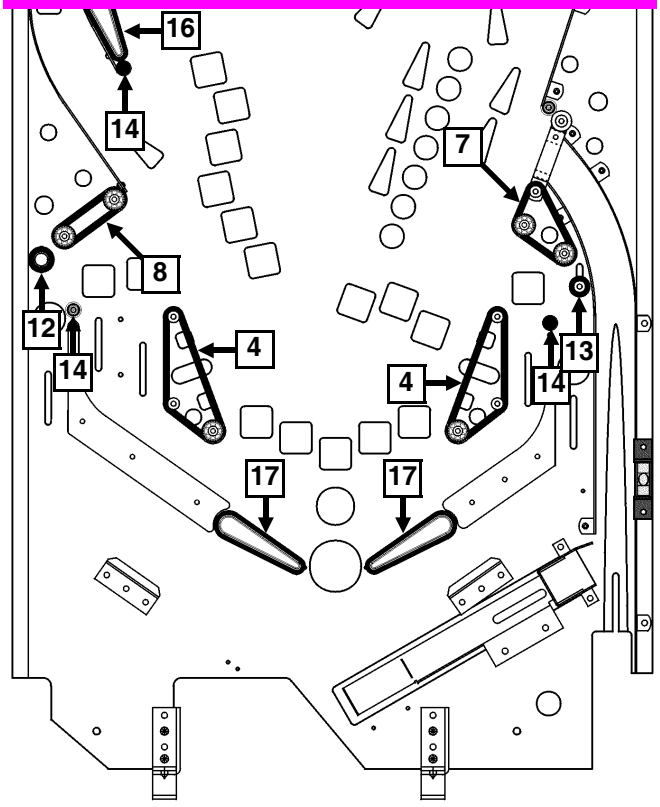

Playfield Top & Bottom - Small Bayonet Sockets & Bulbs ■ (Actual Size) †

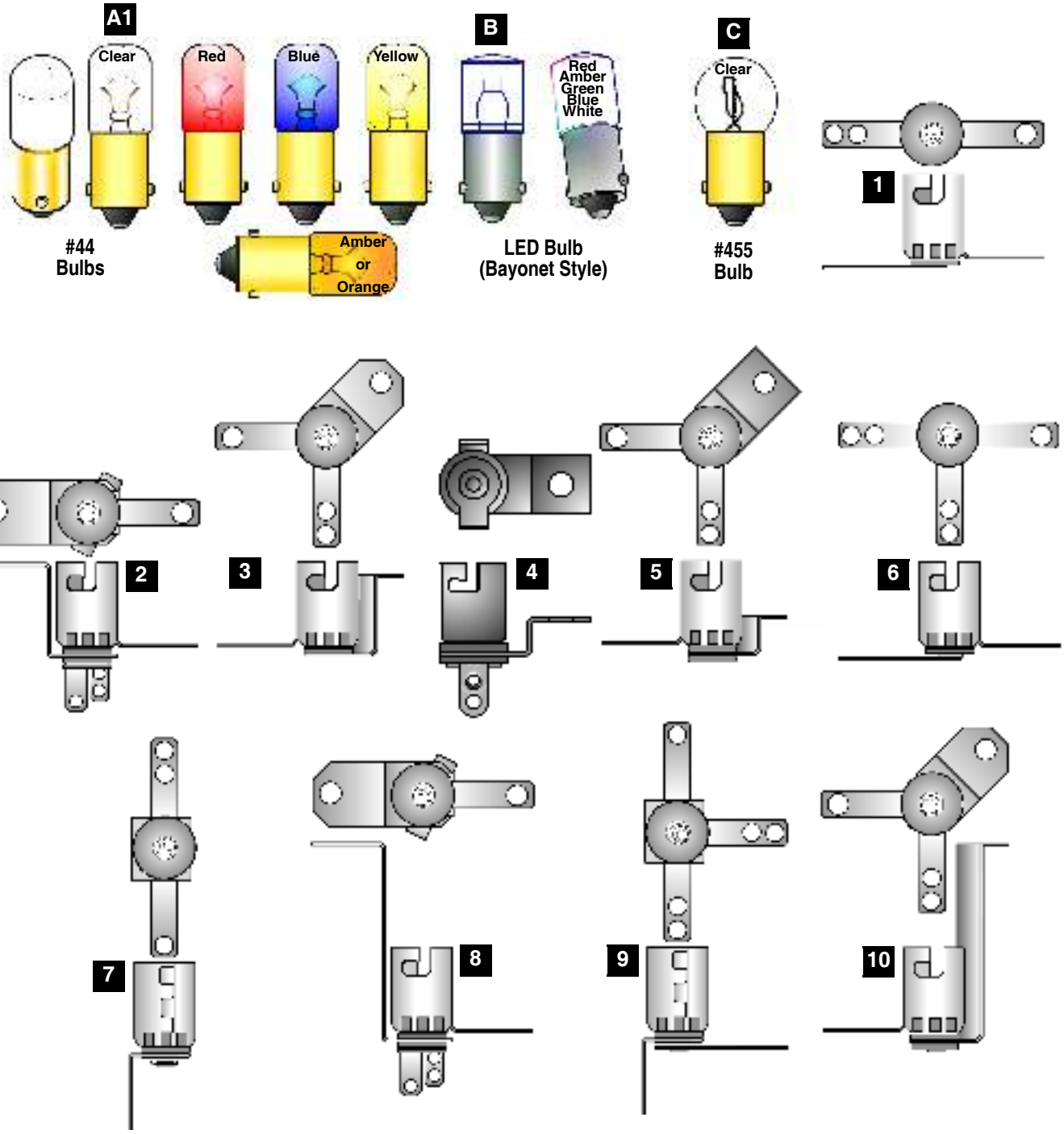

Nr.	BULBS (#44)	QTY.	SPI PART Nr.
A	#44 Bulb (Clear) *Heavy Filament*	33/1	**165-5000-44-HF**
	#44 Bulb (Yellow)	10	165-5053-**06**-HF
	Item A Note: *Different Colors available* ~ **Green** (165-5053-04-HF) **Red** (165-5053-02-HF); **Amber** (165-5053-03-HF); **Blue** (165-5053-05-HF); **Orange** (165-5053-07-HF)		

Nr.	BULBS (LED & #455)	QTY.	SPI PART Nr.
B	LED Module (WHT) **(12.8v 20-25mA) Bynt.**		112-5023-08
	Item B Note: *Different Colors available (not used in this game)* ~ **Red** (**112-5023-02**); **Amber** (**112-5023-03**); **Green** (**112-5023-04**); **Blue** (**112-5023-05**);		
C	#455 Twinkle Bulb		165-5003-00

Nr.	SMALL BAYONET SOCKETS	QTY.	SPI PART Nr.
1	2-Lug Staple Down Socket	14	077-5000-00
2	3-Lug Stand-Up Socket (Med. Brkt.)		077-5008-00
3	2-Lug Stand-Up Socket (Med. Brkt.)		077-5002-00
4	2-Lug Stand-Up Socket (Short Brkt.)		077-5223-00
5	2-Lug Stand-Up Sckt. (Short Bracket)		077-5002-31
6	3-Lug Staple Down Socket		077-5001-00
7	2-Lug Laydown Socket		077-5003-00
8	3-Lug Stand-Up Socket (Tall Bracket)		077-5009-00

Nr.	SMALL BAYONET SOCKETS	QTY.	SPI PART Nr.
9	3-Lug Laydown Socket (3 Lugs Flat)		077-5006-00
10	2-Lug Stand-Up Socket (Tall Bracket)		077-5005-00
11	3-Lug Stand-Up Long Shell Socket		077-5013-00
12	2-Lug Stand-Up Lg. Shell Socket (Gls)	18	077-5031-00
13	1-Lug S-U Lg. Shell Sckt. (Med. Brkt.)		077-5012-00
14	3-Lug S-U Lg. Shell Sckt. (45° Brkt.)	10/1	077-5035-00
15	3-Lug Laydown Socket (2 Lugs Bent)	1	077-5032-00

Note: *# / x X = Mini-Pinball Qty.*
*See Pages **90–94**.*

† The item type (size / description), the quantity and/or location used, are subject to change without notice. Service Bulletins will announce any changes, if warranted.

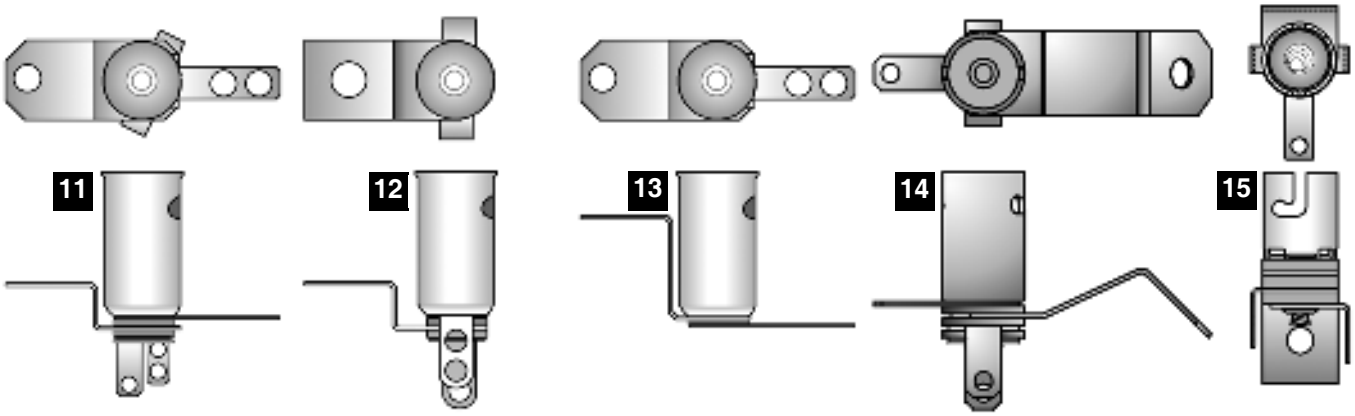

Playfield Bottom - Large Bayonet Sockets & Bulbs ■ (Actual Size) †

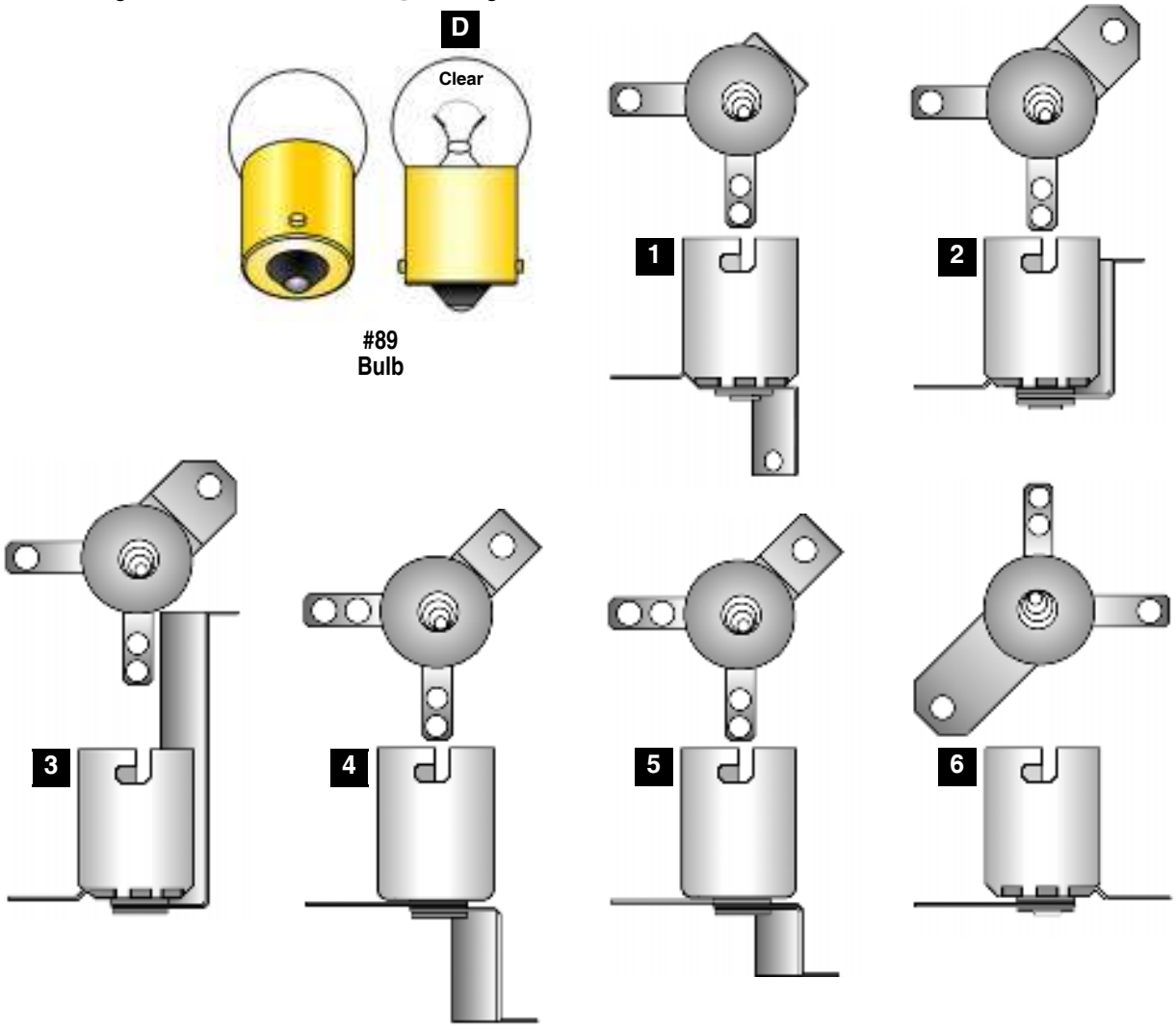

Nr.	BULBS (#89)	QTY.	SPI PART Nr.
D	#89 Bulb *Heavy Filament*	8	165-5000-89-HF

Nr.	LARGE BAYONET SOCKETS	QTY.	SPI PART Nr.	Nr.	LARGE BAYONET SOCKETS	QTY.	SPI PART Nr.
1	2-Lug Laydown Standard Socket		077-5100-00	4	2-Lug Stand-Up Rev. Mount Socket		077-5103-00
2	2-Lug Stand-Up Short Socket	3	077-5101-00	5	2-Lug Stand-Up Rv. Mnt. Short Socket	3	077-5106-00
3	2-Lug Stand-Up Long Socket	2	077-5102-00	6	2-Lug Straight Leg Socket		077-5107-00

† The item type (size / description), the quantity and/or location used, are subject to change without notice. Service Bulletins will anounce any changes, if warranted.

Playfield Top & Bottom - Wedge Base Sockets & Bulbs ■ (Actual Size) †

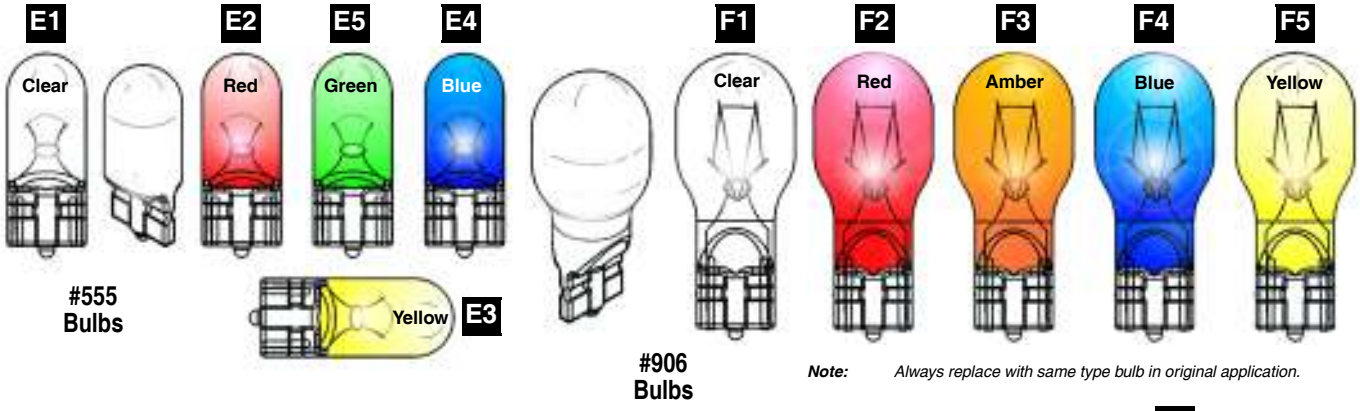

Note: *Always replace with same type bulb in original application.*

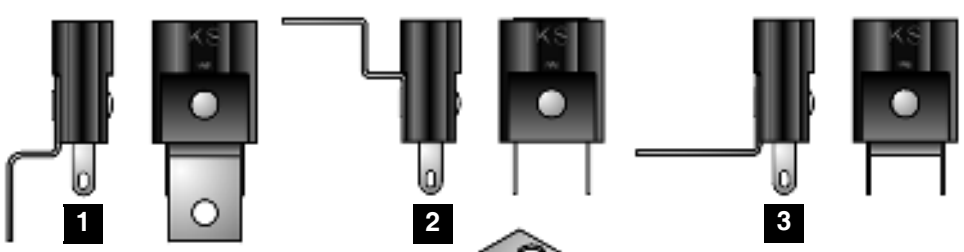

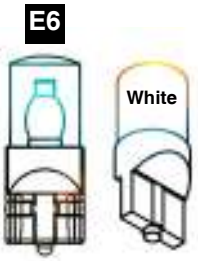

LED Bulb (Wedge Base)

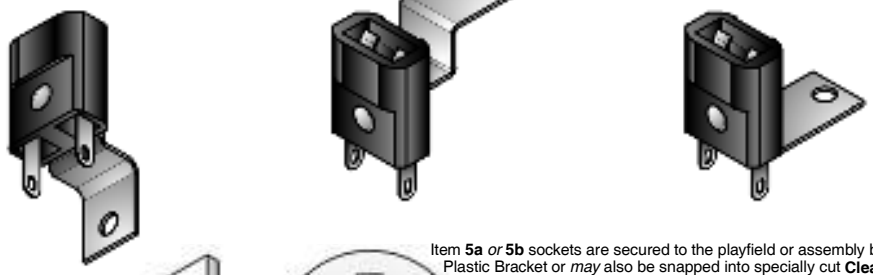

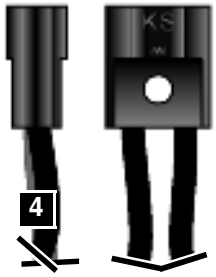

*Item **4** Socket does not require brackets. Old stock may include "L" style brackets (each side); do not secure to assembly.* ***Black Wires (Qty. 2) are 12" each.***

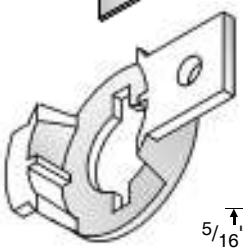

Item **5a** *or* **5b** sockets are secured to the playfield or assembly by Item **5c** Plastic Bracket or *may* also be snapped into specially cut **Clear and / or Screened Plastic Pieces** *or* **Metal Brackets** *(used for multiple mounting of sockets when positioned closely together or in tight areas). If Plastic Pieces or Metal Brackets are used to mount Item **5a** or **5b** Sockets, it will be noted on **Playfield Bottom - Miscellaneous Parts and Brackets**, page earlier in this Chapter.*

Item **5a** is a solderless **IDC** *(Insulation Displacement Connection)* Socket with a built-in Diode, 1N4003 (112-5003-00) *(can be replaced with 1N4001 Diode, 112-5001-00).* Item **5b** Socket (Yellow) is identical to **5a** (Socket) *except* it does ***NOT REQUIRE*** a diode *(Flash Lamp usage).*

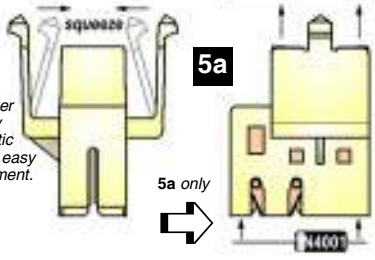

Just squeeze the "side arms" of the socket together and pull away from the plastic or bracket for easy Bulb replacement.

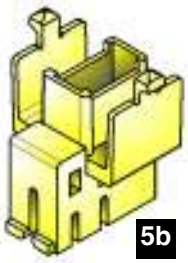

5b *is Yellow with* ***No Diode***

Nr.	BULBS (#555 & LED)	QTY.	SPI PART Nr.
E1	#555 Wedge Base Bulb (Clear)	56/2	165-5002-00
E2-E5	#555 Wedge Base Bulb (Multi-Color)		165-5054-XX
	Item E2-E5 Bulb Note: *Different Colors available (not used in this game) ~* **Red** (**165-5054-02**); **Green** (**165-5054-04**); **Blue** (**165-5054-05**); **Yellow** (**165-5054-06**);		
E6	LED Module (WHT) **(5v - 6.3v) Wedge Base**	1	112-5024-08
	Item E6 Bulb Note : *If LED is **not a** Module and connected with 2 leads soldered to a Terminal Strip 3-Lug with 3X Resistors under Playfield, call Tech Support for Part Number.*		

Nr.	BULBS (#906)	QTY.	SPI PART Nr.
F	#906 Wedge Base Bulb (Clear)		165-5004-00
	Item F Note: *Different Colors available (not used in this game) ~* **Red** (**165-5004-02**); **Amber** (**165-5004-03**); **Blue** (**165-5004-05**); **Yellow** (**165-5004-06**)		
	Ordering Note: ***C86 / CM86 / #86*** *6.3V Mini-Wedge Base Bulb (Clear) used inside the Tournament Button (as described in Section **4**, Chapter **1**, (**The Pink Pages**) Parts Identification & Location, Cabinet - Parts & Switches, Item **117**), use Part Number **165-5002-01**.* ***Neon Bulb*** *(Spike Suppression / Connector for Motors) NE-2 (A1A), use PN **165-5021-00**.*		

Nr.	WEDGE BASE SOCKETS	QTY.	SPI PART Nr.
1	Wedge Base Socket (Laydown)	3	077-5026-01
2	Wedge Base Socket (Offset)	1/2	077-5029-00
3	Wedge Base Socket (Laydown GI)		077-5030-00
4	W.B. Socket (Bumpers/Special App.)	1	077-5206-00

Nr.	WEDGE BASE SOCKETS	QTY.	SPI PART Nr.
5a	IDC Snap-On Socket (Biege)	52	077-5216-00
5b	IDC Snap-On Socket ***No Diode*** (Yel.)		077-5216-**01**
5c	5/16" Ht. Bracket (White)		545-5760-18
6	Light Reflector (Silver Plastic)		545-5409-01
	Note Item 6 : *Typically used with Item 1 (but will fit on any similiar Wedge Base Socket).*		

Note: *# / x X = Mini-Pinball Qty.*
*See Pages **90–94**.*

† *The item type (size / description), the quantity and/or location used, are subject to change without notice. Service Bulletins will announce any changes, if warranted.*

MENU UNDER EVOLUTION

To initiate, from the **MAIN MENU**, select the "TOUR" *Icon*. The **TOURNAMENT MENU** provides ways to quickly and easily start and stop a tournament. Also, tournament data can be viewed *(audits, prize info, etc.).*

All **TOURNAMENT MENU** *Icons* and there usages are explained throughout this chapter in the same order as seen in the Dot Matrix Display. ***NOTE:*** Depending on Game Type, Version, selections made, Dip Switch settings, location and/or areas, some *Icons* may appear non-functional *or* may not appear at all. ***Icons*** *and/or* ***functions, order*** *and* ***operation are subject to change***.

In displays where changes can be made *or* to perform a function, use the **GREEN Button** to go **[BACK]**, exit *or* escape, the **RED Buttons** to **[< / –]** HIGHLIGHT PREVIOUS *or* DECREASE **/ [+ / >]** HIGHLIGHT NEXT *or* INCREASE to highlight the desired option, and the **BLACK Button** to **[SELECT]** it *or* activate.

Start Tournament

To initiate, from the **TOURNAMENT MENU**, select the "STRT" *Icon*. The **START TOURNAMENT MENU** allows the operator to start a tournament. Select **QUICK START** *or* **CUSTOM** Tournament Start. For the first time Tournament Set-Up, it is recommended to select **CUSTOM**. Follow the on-screen prompts. After completion of all options in **QUICK START** *or* **CUSTOM**, the Tournament is started, the **START TOURNAMENT MENU** is exited and returns to the **TOURNAMENT MENU**.

QUICK START :

Increase or decrease the: • **DAYS**, **HOURS** *and* **MINUTES** • **PRIZE POOL $ (DOLLAR)** *and* **¢ (CENT) AMOUNT**
• **INCREMENT THE PRIZE POOL PER PLAY INCREASES $** *and* **¢ AMOUNT**

CUSTOM START :

- Confirm the current date and time *(if it was not set previous via the* ***UTILITIES MENU*** *it can be set-up in this display as well).* Enter the **MONTH**, **DAY**, **YEAR** and **TIME**
- Choose the Tournament **Start** Date: **MONTH**, **DAY**, **YEAR** and **TIME**
- Choose the Tournament **End** Date: **MONTH**, **DAY**, **YEAR** and **TIME**

- Choose the **CREDITS** per play desired (01-10). Set the maximum number of *Credits* that may be accumulated per game. ***Note:*** *The current pricing is displayed; to change pricing* ***GO TO THE ADJUSTMENTS MENU***.

Increase or decrease the: • **PRIZE POOL $ (DOLLAR)** *and* **¢ (CENT) AMOUNT**
• **INCREMENT THE PRIZE POOL PER PLAY INCREASES $** *and* **¢ AMOUNT**
• **MAXIMUM (CAP) PRIZE POOL $** *and* **¢ AMOUNT**.

- Increase or decrease the number of **PRIZES** (01-05 **HIGH SCORE**; 02-05 **B'N'W**). Set the maximum # of *Prize Positions* to be awarded during a Tournament. ***Selections are as follows*** *(% distribution cannot be changed):*

HIGH SCORE:			BUMP N' WIN :		
			Cannot set to 01. Minimum of 2 winners required.		
Set to **01**	1 Winner	**100%** (1) Prize Pool			
Set to **02**	2 Winners	**65%** (1) **35%** (2)	Set to **02**	2 Winners	**65%** (1) **35%** (2)
Set to **03**	3 Winners	**50%** (1) **30%** (2) **20%** (3)	Set to **03**	3 Winners	**50%** (1) **25%** (2) **25%** (3)
Set to **04**	4 Winners	**50%** (1) **25%** (2) **15%** (3) **10%** (4)	Set to **04**	4 Winners	**40%** (1) **20%** (2) **20%** (3) **20%** (4)
Set to **05**	5 Winners	**50%** (1) **20%** (2) **15%** (3) **10%** (4) **5%** (5)	Set to **05**	5 Winners	**40%** (1) **15%** (2) **15%** (3) **15%** (4) **15%** (5)

- Select the **AWARD TYPE** (CASH, POINTS, PRIZE, TICKETS *or* NONE). Select **CASH** for the displays to represent the Prize Pool amount *(based on Jackpot Base and Max.)* in ***$Dollars***. Select **POINTS** for the display to represent the Prize Pool amount in ***Points***. Select **PRIZE**, if applicable. Select **TICKET** for the display to represent the Prize Pool amount in ***Tickets***. Select **NONE** ***NOT TO*** represent anything.

Custom Start continued on the next page.

*The following option is available only if **CASH** was selected as the **AWARD TYPE**.*

- Select the option to **SHOW PLAYER CASH** (YES *or* NO). Select **YES** for the display to represent the >>> **previous** <<< Tournament Winners & Cash amount *(or Points, Prizes, etc.)* will show in the ***Attract Mode***.

- Select the kind of **TOURNAMENT** desired (BUMP 'N' WIN *or* HIGH SCORE).

*The following options are available only if **BUMP 'N' WIN** was selected as the **TOURNAMENT TYPE**.*

- Select *or* confirm the **BASE POINT AMOUNT** (00 *or* 1,000,000 – 4,294,967,295 increments of 1,000,000.
- Select *or* confirm the **RANGE AMOUNT** (00 *or* 1,000,000 – 4,294,967,295 increments of 1,000,000).

- Select the **BALLS** per game (1 – 10).

STOP TOURNAMENT

To initiate, from the **TOURNAMENT MENU**, select the "STOP" *Icon*. The **STOP TOURNAMENT MENU** allows the operator to stop a tournament. ***Note:*** *This Icon only appears if a Tournament was set-up and is running (in place of the Start Icon).*

STOP TOURNAMENT ARE YOU SURE?

- Use the **BLACK Button** to **[SELECT]** to confirm. Press the **BLACK Button** again to continue.

The **STOP TOURNAMENT MENU** is exited and returns to the **TOURNAMENT MENU**.

VIEW TOURNAMENT DATA

To initiate, from the **TOURNAMENT MENU**, select the "DATA" *Icon*. If no data is available, the display will indicate NO PREVIOUS DATA. Press the **GREEN Button** to escape **[BACK]** to the **TOURNAMENT MENU**.

TOURNAMENT AUDITS [#1 – #14]

To initiate, from the **TOURNAMENT MENU**, select the "AUD" *Icon*. The Dot Matrix Display will indicate the *audit number (in this group)*, *audit name* and the *audit total or value*. The current audit will remain on the display until the next audit is viewed or when this sub-menu is exited.

01	**TOTAL PLAYS :** Total number of *Regular* and *Tournament Games* played while a *Tournament is in progress.* This total is derived by adding the below Tournament Audit **02** with ***Regular Plays.***
02	**TOURNAMENT PLAYS :** Total number of *Tournament Games* played while a *Tournament is in progress.*
03	**TOTAL QUALIFYING PLAYS :** Total number of times a player qualified *(invited to enter name).*
04	**TOTAL GAME EARNINGS :** Total Gross Earnings *accepted,* while a *Tournament is active (in progress).*
05	**TOTAL TOUR. EARNINGS :** Tournament Earnings *(Audit **04** less Reg. Game Earnings)* while a *Tournament is in progress.*
06	**JACKPOT (PRIZE POOL TOTAL) :** Total Prize Pool *(Jackpot)* Amount to be paid out while a *Tournament is in progress.*
07	**NET EARNINGS :** Provides the total Net Earnings *(Gross Earnings less Prize Pool)* while a *Tournament is active (in progress).*
08	**ACCUM. TOTAL PLAYS :** Accumulative total amount of *Regular & Tourn .Games* played since the first Tournament was played.
09	**ACCUM. TOUR. PLAYS :** Accumulative total amount of *Tournament Games* played since the first Tournament was played.
10	**ACCUM. QUALIFYING PLAYS :** Accumulative total number of times a player qualified *(invited to enter name).*
11	**ACCUM. EARNINGS :** Total Gross Earnings *accepted,* since the first Tournament was played.
12	**ACCUM. TOUR EARNINGS :** Accumulative total Tournament Game Earnings since the first Tournament was played.
13	**ACCUM. JACKPOT :** Accumulative total of Prize Pool *(Jackpot)* Amounts paid out since the 1st Tourn. was played.
14	**# TOURNAMENTS :** Number of Tournaments *(not individual Tournament Games)* since the first Tournament was played.

SIGN MESSAGES A–B

To initiate, from the **TOURNAMENT MENU**, select the "A-B TEXT" *Icon*. *At time of print, menu non-functional. If made available in future code updates, this menu will allow the operator to display "Location" and "Prize" Messages.* Follow the on-screen prompts to complete [END].

Remember, use the **GREEN Button** to go **[BACK]**, exit *or* escape, the **RED Buttons** to **[< / –]** MOVE LEFT / CHOOSE NEXT **[+ / >]** MOVE RIGHT / CHOOSE PREVIOUS, and the **BLACK Button** to **[SELECT]** *as 'OK'.*

Drawings for Major Assemblies & Ramps (The Blue Pages)

Table of Contents for Section 4, Chapter 2 of 2

Table of Contents for Section 4, Chapter 2 65

Ball Shooter (Plunger) Assembly, 500-6146-00-04 ..... (Top) 66
▷ Assembly View ▷ Ball Shooter Parts Table

Autoplunger Arm Weld Assembly, 500-6091-00 Autoplunger Coil Assembly, 500-6092-02-ND and Shooter Lane Switch Assembly, 500-6096-00 ..... (Bot) 66

4-Ball Trough Assembly, 500-6318-14-ND 67
▶ Associated Parts: Ball Trough Enter/Exit Scoop, 535-7329-01; Steel Balls (1-1/16" ø), 260-5000-00

Flipper (Left) Assembly, 500-6543-14-ND 68
▶ Associated Parts: YELLOW Flipper Bat & Shaft Asm., 515-5133-06-06; Large Flipper BLACK Rubber Ring, 545-5277-00

Flipper (Right) Assembly, 500-6543-04-ND 69
▶ Associated Parts: YELLOW Flipper Bat & Shaft Asm., 515-5133-06-06; Large Flipper BLACK Rubber Ring, 545-5277-00

Flipper (Upper Left) Assembly, 500-6543-35-NDM 70
▶ Associated Parts: YELLOW Mini-Flipper Bat & Shaft Asm., 515-6275-06; Mini-Flipper BLACK Rubber Ring, 545-5207-00

Bumper Top, Bumper Bottom & Bumper Switch Individual Parts Only 71
▶ Associated Part: Bumper [Pop] Caps (Clear, Red & Blue), 550-5057-01, -02 & -05 (Qty. 1/per)

Slingshot (Left & Right) Assemblies, 500-5849-02-ND (Qty. 2) 72

Up/Down Death Post Assembly, 500-7022-00 73

Scoop & Vertical Up-Kicker (VUK) Assembly, 500-7028-00 74

Eject / Vertical Up-Kicker (VUK) Assembly, 500-6846-01 75

1-Bank Drop Target Assembly, 500-7029-01 76-77

4-Bank Drop Target Assembly, 500-7029-04 78-79

1- or 4-Bank Drop Target ... Disassembly Procedures 80-81

Plastic Left Ramp Assembly, Individual Parts Only 82-83

Flat Rail #21 (Riveted) Assemby, 515-7607-21 ..... (Top) 84

Flat Ramp & Flap (Riveted) Assemby, 510-5006-00 ..... (Mid) 84

Red Wire Ramp, 535-9920-00 ..... (Side) 84

Meg Popper Assembly, Individual Parts Only 85

Beer Can (Brian) Assembly, Individual Parts Only 86

Stewie & Motor Assembly, Individual Parts Only 87

Peter & Mounting Assembly, Individual Parts Only ..... (Top) 88

Chris & Mounting Assembly, Individual Parts Only ..... (Mid) 88

Lois & Mounting Assembly, Individual Parts Only ..... (Bot) 88

Back Panel Assembly, Individual Parts Only 89

Stewie Mini-Pinball Assembly Overview 90-91

Mini-Playfield Flipper (Left) Assembly, 500-7019-00 ..... (Top) 92
▶ Associated Parts: YELLOW Mini-Flipper Bat & Shaft Asm., 515-7591-06 & Mini-Flipper BLACK Rubber Ring, 545-6187-00

Mini-Playfield Flipper (Right) Assembly, 500-7019-01 ..... (Bot) 92
▶ Associated Parts: YELLOW Mini-Flipper Bat & Shaft Asm., 515-7591-06 & Mini-Flipper BLACK Rubber Ring, 545-6187-00

Mini-Playfield Shooter Assembly, 500-7023-00 ..... (Top) 93

Mini-Playfield Steel Shooter Ramp & Flap Asm. and OPTO Asm., Individual Parts Only .... (Bot) 93

Mini-Playfield Plastic Ramp Assembly, Individual Parts Only ..... (Top) 94

Mini-Pinball Plastic Enclosure Assembly, Individual Parts Only ..... (Bot) 94

Ball Shooter (Plunger) Assembly, 500-6146-00-04 (Items 1-6)

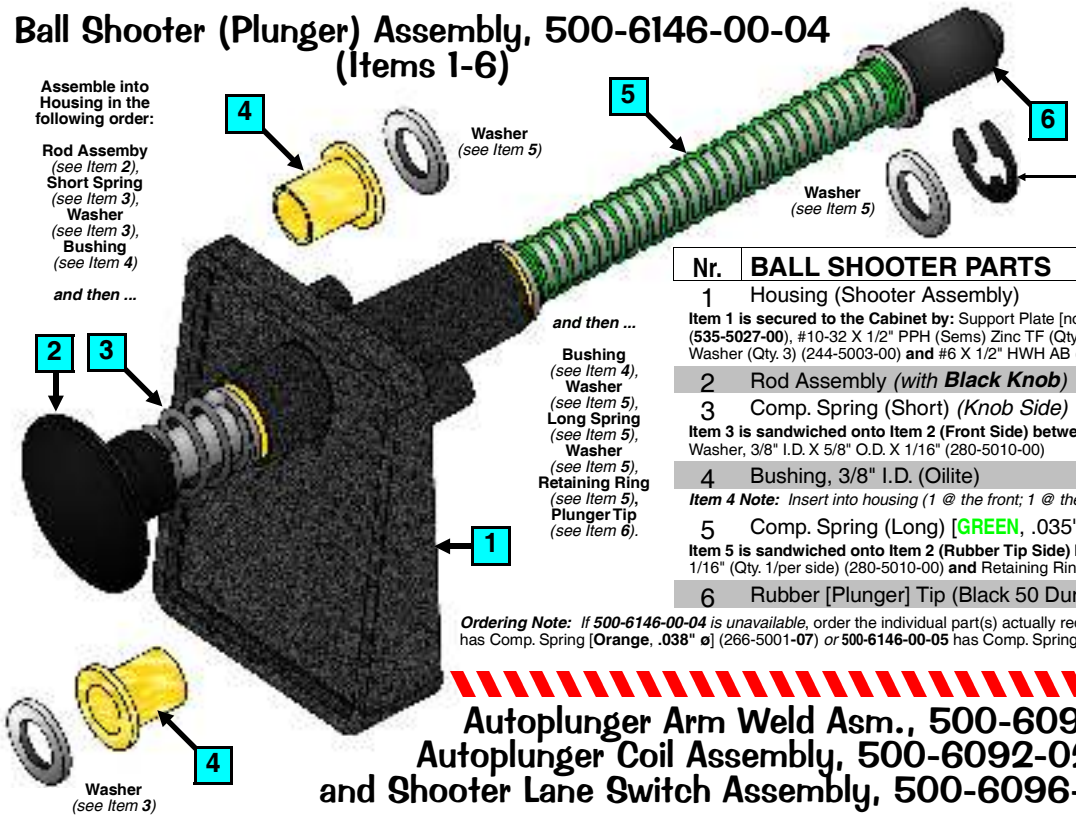

Take Note:

*Securing Hardware for Items **3** & **5** are also shown separated from the Ball Shooter (Plunger)*

Nr.	BALL SHOOTER PARTS	QTY.	SPI PART Nr.
1	Housing (Shooter Assembly)	1	535-5067-02
	Item 1 is secured to the Cabinet by: Support Plate [not included with Item 1 *or* Assembly] (**535-5027-00**), #10-32 X 1/2" PPH (Sems) Zinc TF (Qty. 3) (237-6033-00), #10 Split Lock Washer (Qty. 3) (244-5003-00) **and** #6 X 1/2" HWH AB (Zinc) Red (Qty. 2) (234-5001-02)		
2	Rod Assembly *(with **Black Knob**)*	1	515-6557-00
3	Comp. Spring (Short) *(Knob Side)*	1	266-5010-00
	Item 3 is sandwiched onto Item 2 (Front Side) between the knob and by: Washer, 3/8" I.D. X 5/8" O.D. X 1/16" (280-5010-00)		
4	Bushing, 3/8" I.D. (Oilite)	2	280-5010-00
	***Item 4 Note:** Insert into housing (1 @ the front; 1 @ the back) as shown.*		
5	Comp. Spring (Long) [GREEN, .035" ø]	1	266-5001-**04**
	Item 5 is sandwiched onto Item 2 (Rubber Tip Side) by: Washer, 3/8" I.D. X 5/8" O.D. X 1/16" (Qty. 1/per side) (280-5010-00) **and** Retaining Ring, 3/8" ø Shaft (270-5012-00)		
6	Rubber [Plunger] Tip (Black 50 Duro)	1	545-5276-00

***Ordering Note:** If **500-6146-00-04** is unavailable*, order the individual part(s) actually required. ... Identical to **500-6146-00-07** has Comp. Spring [**Orange**, **.038" ø**] (266-5001-**07**) *or* **500-6146-00-05** has Comp. Spring [**Blue, .031" ø**] (266-5001-**05**).

Autoplunger Arm Weld Asm., 500-6091-00 (Items 1-5), Autoplunger Coil Assembly, 500-6092-02-ND (Items 6-9) and Shooter Lane Switch Assembly, 500-6096-00 (Items 10-12)

Nr.	AUTOPL. ARM WELD PARTS	QTY.	SPI PART Nr.
1	Arm Weld Assembly	1	515-6526-00
	Item 1 is secured to Item 2 by: Retaining Ring, 1/4" ø Shaft (Qty. 1) (270-5002-00)		
2	Autoplunger Fulcrum	1	535-7697-00
3	Nyliner, 1/4" (Thomson #4l1-FF)	2	545-5423-00
4	Plunger & Link Assembly	1	511-5183-00
	Item 4 is secured to Item 1 by: Retaining Ring, 1/4" ø Shaft (Qty. 1) (270-5002-00) ***For Individual Items use :*** Plunger 1.81" Lg. (**530-5025-05**), Plunger Link (**545-5293-00**) **and** Roll Pin 1/8" ø x 5/8" Lg. (**251-5008-00**)		
5	Compression (Return) Spring	1	266-5020-00
	(ASM. REF. 500-6091-00, Items 1-5)		

Nr.	AUTOPLNGR. COIL PARTS	QTY.	SPI PART Nr.
6	Autoplunger Coil Bracket Assembly	1	515-6527-00
	Items 1 & 6 are secured below the P/F by: #8 X 1/2" SHWH AB (Zc.) (Qty. 9) (234-5101-00)		
7	Coil Retainer Bracket	1	535-5203-03
	Item 7 is secured to Item 6 by: #8-32 X 1/4" PPH MS (Sems) Zinc (Qty. 2) (232-5300-00)		
8	Coil, 24-940 [NO DIODE]	1	090-5036-ND
	COIL DOES NOT REQUIRE A DIODE. SEE ⟲ COIL NOTE BELOW FOR DETAILS.		
9	Coil Sleeve	1	545-5031-00
	(ASM. REF. 500-6092-02-ND, Items 6-9)		

Nr.	SWITCH PARTS	QTY.	SPI PART Nr.
10	Switch *(for Shooter Lane)*	1	180-5157-00
	Switch has a Diode (1N4004) (112-5003-00). *Can be replaced with (1N4001) (112-5001-00).*		
11	Switch Mounting Bracket	1	535-6173-00
	Item 11 is secured to Playfield by: #6 X 1/2" SLT HWH AB (Zinc) (Qty. 2) (234-5001-02)		
12	Switch Body Protect Plate	1	535-6539-00
	Item 12 is secured to Items 10-11 by: #2-56 X 1/2" Unslotted Ser. HWH #4 Head TR3 Black (Qty. 2) (237-5937-02) **and** #2-56 Hex Nut (Qty. 2) (240-5301-0)		
	(ASM. REF. 500-6096-00, Items 10-12)		

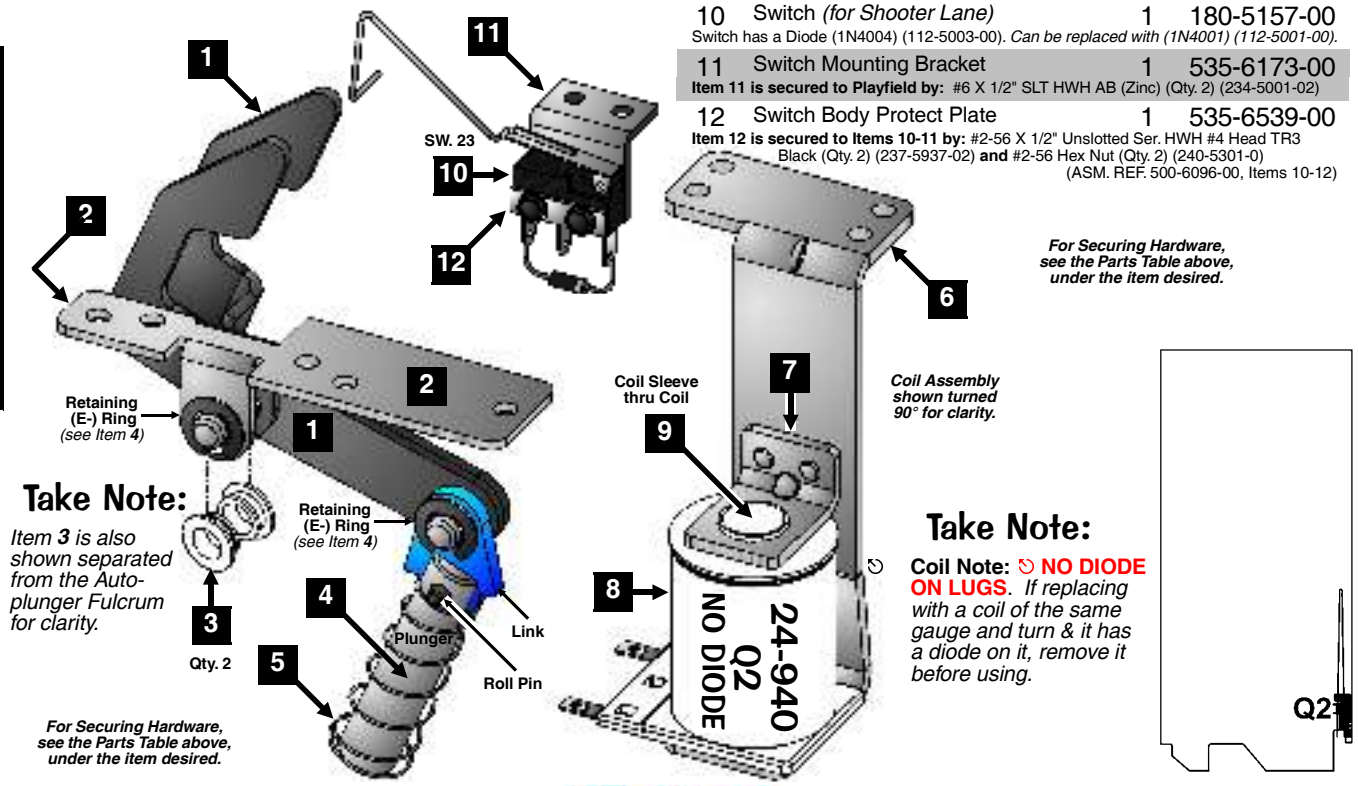

For Securing Hardware, see the Parts Table above, under the item desired.

Coil Assembly shown turned 90° for clarity.

Take Note:

*Item **3** is also shown separated from the Auto-plunger Fulcrum for clarity.*

Take Note:

Coil Note: ⟲ NO DIODE ON LUGS. *If replacing with a coil of the same gauge and turn & it has a diode on it, remove it before using.*

4-Ball Trough Assembly, 500-6318-14-ND (Items 1-13)
and Associated Parts: See Parts Table Below.

Ordering Note: Identical to 500-6318-24 with exceptions, see note below Item 13 (Parts Table).

Nr.	4-BALL TROUGH PARTS	QTY.	SPI PART Nr.
1	Ball Trough Outhole Mounting Bracket	1	515-6580-01
	Item 1 is secured below the playfield by: #8 X 1/2" SHWH AB (Zc.) (Qty. 4) (234-5101-00)		
2	Coil Mounting Bracket	1	535-7330-01
	Item 2 is secured to Item 1 by: #8-32 X 3/8" HWH Swage (Sr.) Zinc (Qty. 4) (237-5975-00)		
3	Coil Retaining Bracket	1	535-5203-03
	Item 3 is secured to Item 2 by: #8-32 X 1/4" SHWH (Serr) Zinc (Qty. 2) (237-5975-04)		
4	Coil, 26-1200 [NO DIODE]	1	090-5044-ND
	COIL DOES NOT REQUIRE A DIODE. SEE ⟲ COIL NOTE BELOW FOR DETAILS.		
5	Coil Sleeve (Short) (Formost #10-7077)	1	545-5076-01
6	Steel & Nylon Plunger Assembly	1	515-7309-01
7	Compression (Return) Spring	1	266-5020-00
8	Rubber Bumper (Grommet)	1	545-5105-00
9	Micro Switch **(Roller Actuator, Lite-Force)**	3	180-5119-02
	Item 9 requires: Heat Shrink Tubing 1/8" ø PUI-24 (Qty. 1"/per) (605-5006-00)		
	Switch has a Diode (1N4004) (112-5003-00). *Can be replaced with (1N4001) (112-5001-00).*		
10	Switch Body Protect Plate	3	535-6539-00

Nr.	4-BALL TROUGH PARTS	QTY.	SPI PART Nr.
11	Trough Ball Guide Plate	0	535-7801-00
	Item 11 is secured to Item 1 by: 1/4" X 5/16" X .144" I.D. Spacer Tap. (Qty. 1) (254-5014-03) **and** #2-56 X 1/2" HWH (Ser) UNS #4HD TR3 BO (Qty. 4) (237-5937-02)		
12	Dual OPTO TRANS Board Assembly	1	515-0173-00
13	Dual OPTO REC Board Assembly	1	515-0174-00
	Items 12 & 13 are secured by: #6-32 X 5/8" HWH Swg (Ser) Zc (Qty. 3/per) (237-5976-04) ***For Individual Items use :*** Dual OPTO Transmitter Board (Qty. 1) (**520-5173-00**), Dual OPTO Receiver Board (Qty. 1) (**520-5174-00**), OPTO PCB Tube Spacer (Brass) (Qty. 3/per) (**530-5308-02**) **and** OPTO PCB Rubber Grommet (Qty. 3/per) (**545-5518-00**)		

Ordering Note: *If **500-6318-14-ND** is unavailable, order the individual part(s) actually required. This assembly is identical to **500-6318-24-ND**, **-15** or **-25** except for the quantity of **Items 9 & 10** (Qty. 4/per on 5-Ball Trough) **and Item 11**, required when a Magnet Mech. is used in the game (this game not required). **-ND** means **no diode** on **Item 4**, Coil, 26-1200.*

ASSOCIATED PARTS **ARE NOT INCLUDED** WITH THE ABOVE ASSEMBLY.

Nr.	ASSOCIATED PART(S)	QTY.	SPI PART Nr.
AP-A	Ball Trough Enter / Exit Scoop	1	535-7329-01
	Item AP-A secured to the playfield by: #8 X 1/2" SHWH AB (Zinc) (Qty. 4) (234-5101-00).		
AP-B	* Steel Balls (1-1/16" ø)	4	260-5000-00

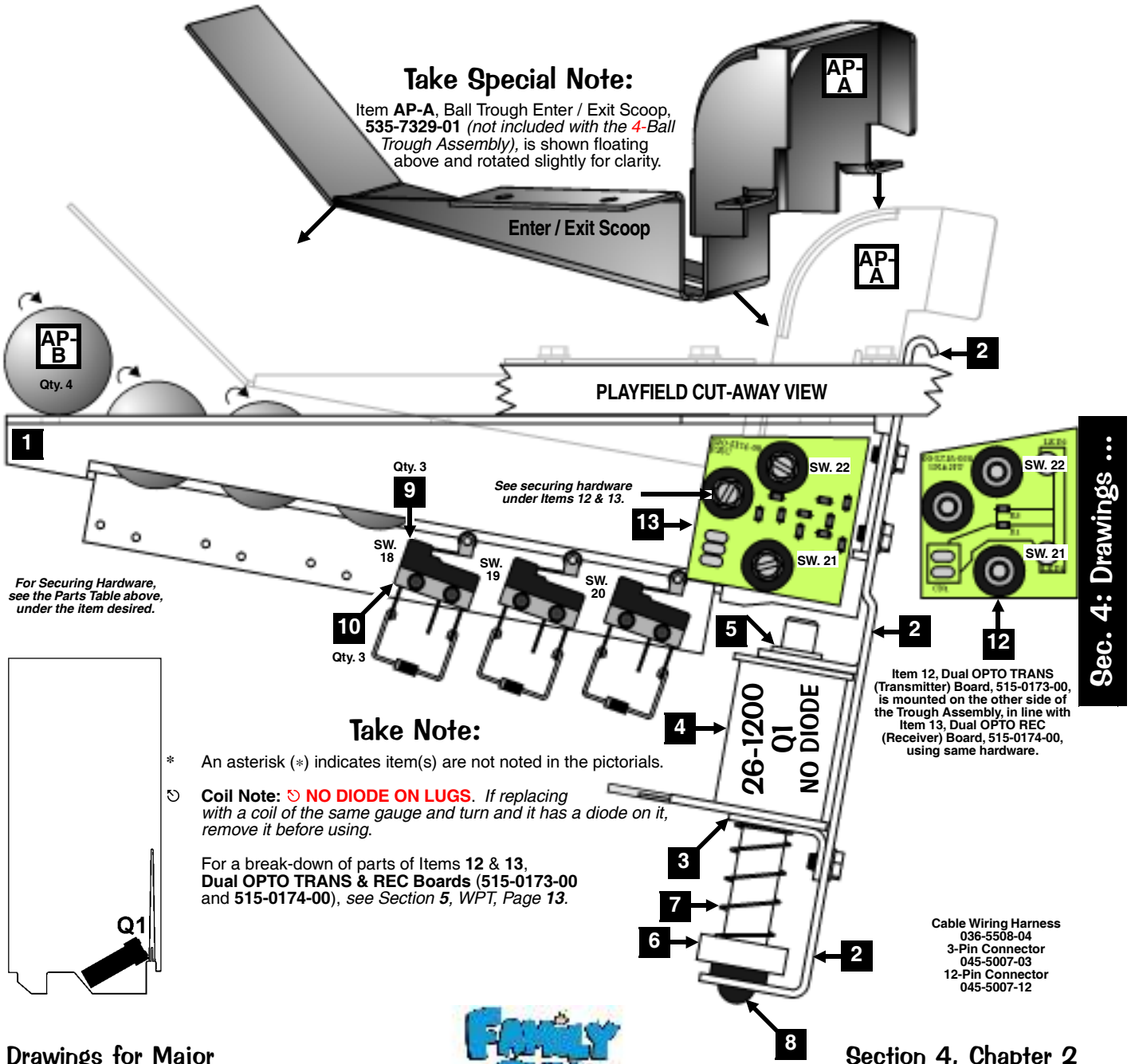

Flipper (Lower Left) Assembly, 500-6543-14-ND (Items 1-15)
and Assoc. Parts: Yellow Flipper Bat & Shaft Assy., 515-5133-06-06 (Items AP-A/-B)

Nr.	FLIPPER (LEFT) PARTS	QTY.	SPI PART Nr.
1	Flipper Base Plate (**LEFT**)	1	**See FRP1**
	Item 1 is secured below the playfield by: #8 X 1/2" SHWH AB (Zc.) (Qty. 8) (234-5101-00)		
	Ordering Note: *Use Item **FRP1**, see the end of this Parts Table.*		
2	Flipper Bat Bushing (White Plastic) .25" ø I.D.	1	545-5070-00
	Item 2 is secured to Item 1 by: #6-32 X 3/8" HWH Swage (Ser.) Zc. (Qty. 3) (237-5976-02)		
3	Power (EOS / End-of-Stroke) Switch	1	180-5149-00
	Item 3 is secured to Item 1 by: #6-32 X 5/8" HWH Swage (Ser.) Zc. (Qty. 2) (237-5976-04)		
4	Sw. Plate/Spring Return Brkt. (**LEFT**)	1	535-7354-**01**
5	Flipper Return Spring	1	265-5035-00
6	Coil Stop Bracket Sub-Assembly	1	515-6308-01
	Item 6 is secured to Item 1 by: #10-32 X 3/8" SHWH Swage (Serr) Zinc (Qty. 2) (237-5985-00) **and** #10 Split Lock Washer (Qty. 2) (244-5003-00)		
7	Spring Washer (17/32" ID X 3/4" X 1")	1	269-5002-00
8	Coil Support Bracket	1	535-7356-00
	Item 8 is secured to Item 1 by: #8-32 X 3/8" HWH Swage (Ser.) Zc. (Qty. 2) (237-5975-00)		
9	Coil, 23-1100 [NO DIODE] (Left)	1	090-5030-ND
	COIL DOES NOT REQUIRE A DIODE. SEE ⟲ COIL NOTE BELOW FOR DETAILS.		
10	Coil Sleeve	1	545-5388-00
11	Deflector Pad (Bumper)	1	545-5428-00
12	Flipper Plunger & Link Sub-Assy.	1	515-6304-03
	For Individual Items use : Flipper Plunger (**530-5349-01**) **and** Plunger "Flipper" Link (**545-5611-01**) **and is secured to the Plunger by:** Bushing, .16" ø ID X .281" ø OD X .187" (Qty. 1) (530-5532-00) **and** Spiral Pin ø 5/32" X 3/4" Lg. (Qty. 1) (251-5015-02)		

Nr.	FLIPPER (LEFT) PARTS	QTY.	SPI PART Nr.
13	Crank Bar	1	530-5070-02
	Item 13 requires: Bushing, .192" ø ID X .312" ø OD X .195" (Qty. 1) (530-5139-00)		
14®	Switch Actuator (**LEFT**) Sub-Assy.	1	515-7257-**01**
	For Individual Items use : Actuator & Spring Bracket (**LEFT**) (**535-9038-01**) **and** ® Switch Actuator (White Plastic) (**545-5612-00**) **and is secured to the Bracket by:** Rivet, 1/8" ø X 1/4" Lg. (Qty. 1) (249-5003-00)		
15	Set Screw: #10-32 X 3/4" Socket Hd.	2	237-6144-00
	Item 15 requires: #10-32 Nylon Stop Nut (Qty. 1 *Flipper Link Side Only*) (240-5203-00) **and** #10 Split Lock Washer (244-5003-00) ***Tool Required for Item 15:*** **5/32" or 4mm Allen Wrench**		

Flipper Rebuild Parts for Easier Installation, $ave $:

FRP1	**Flipper Base Plate Kit (LEFT)** *Includes Item 1 pre-threaded, with the Securing Hardware for Items 2, 3, 6 & 8.*	515-6617-**01**
FRP2	**Plunger, Link & Crank (LEFT) Assy.** *Includes above Items 12, 13, 14 and 15 and is pre-assembled.*	515-7203-**01**
FRP3	**Flipper (LEFT) Rebuild Kit** *Same as **FRP2**, but also includes above Items 6 & 10.*	500-6307-**10**

ASSOCIATED PARTS **ARE NOT INCLUDED** WITH THE ABOVE ASSEMBLY.

Nr.	ASSOCIATED PART(S)	QTY.	SPI PART Nr.
AP-A	**YELLOW** Flipper Bat (Plain) & Shaft (Non-Knurled End) Assembly	1	515-5133-06-06
AP-B	Large Flipper **BLACK** Rubber Ring	1	545-5277-00

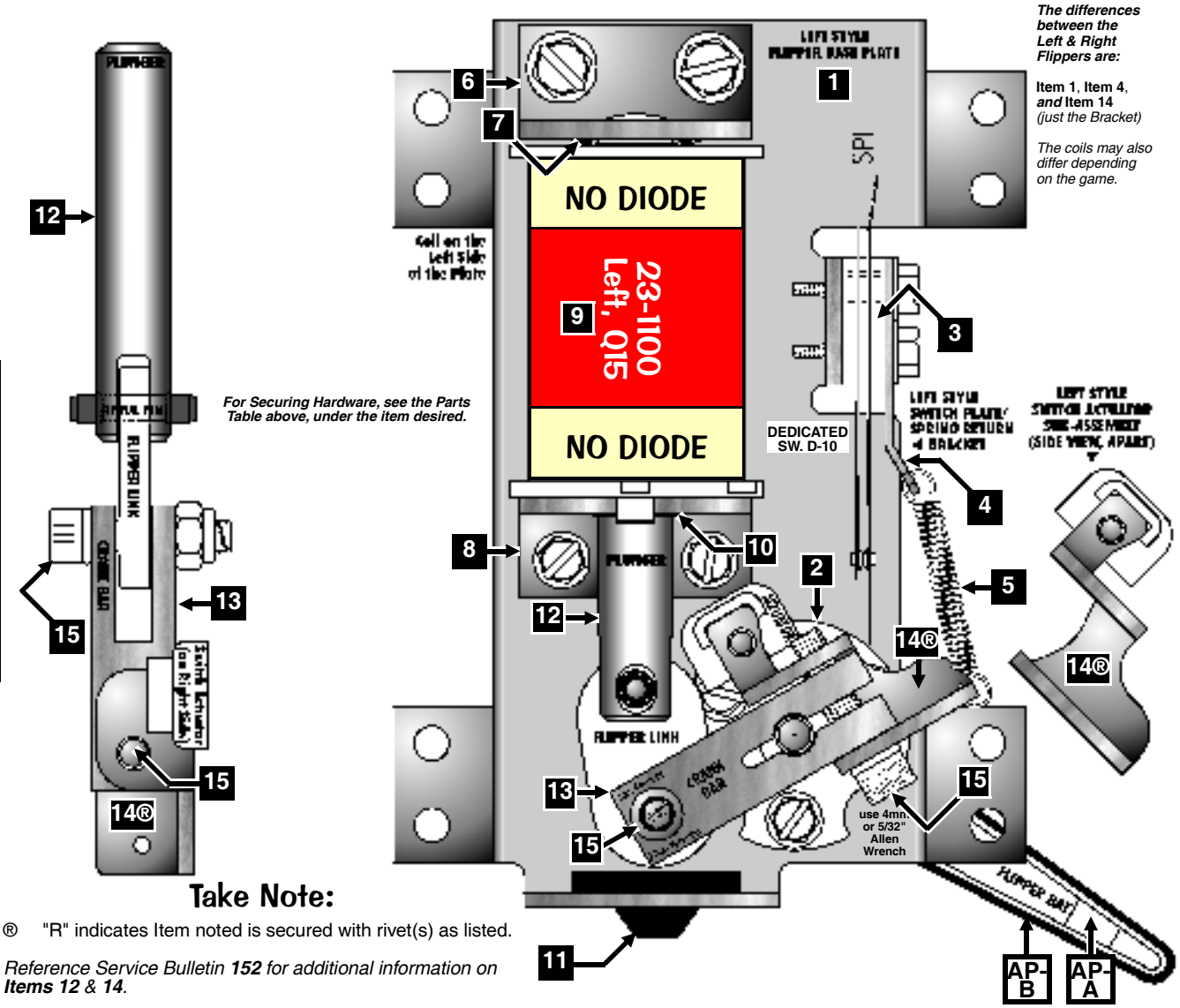

The differences between the Left & Right Flippers are:

Item 1, **Item 4**, ***and* Item 14** *(just the Bracket)*

The coils may also differ depending on the game.

Take Note:

® "R" indicates Item noted is secured with rivet(s) as listed.

*Reference Service Bulletin **152** for additional information on **Items 12** & **14**.*

** To Order the Flipper (Left) Rebuild Kit ask for Part Nr.: 500-6307-10 (includes Items 6, 10, 12, 13, 14 & 15)*

Flipper (Lower Right) Assembly, 500-6543-04-ND (Items 1-15)
and Assoc. Parts: Yellow Flipper Bat & Shaft Assy., 515-5133-06-06 (Items AP-A/-B)

Nr.	FLIPPER (RIGHT) PARTS	QTY.	SPI PART Nr.
1	Flipper Base Plate (**RIGHT**)	1	**See FRP1**
	Item 1 is secured below the playfield by: #8 X 1/2" SHWH AB (Zc.) (Qty. 8) (234-5101-00)		
	Ordering Note: *Use Item **FRP1**, see the end of this Parts Table.*		
2	Flipper Bat Bushing (White Plastic) .25" ø I.D.	1	545-5070-00
	Item 2 is secured to Item 1 by: #6-32 X 3/8" HWH Swage (Ser.) Zc. (Qty. 3) (237-5976-02)		
3	Power (EOS / End-of-Stroke) Switch	1	180-5149-00
	Item 3 is secured to Item 1 by: #6-32 X 5/8" HWH Swage (Ser.) Zc. (Qty. 2) (237-5976-04)		
4	Sw. Plate/Spring Return Brkt. (**RIGHT**)	1	535-7354-**00**
5	Flipper Return Spring	1	265-5035-00
6*	Coil Stop Bracket Sub-Assembly	1	515-6308-01
	Item 6 is secured to Item 1 by: #10-32 X 3/8" SHWH Swage (Serr) Zinc (Qty. 2) (237-5985-00) **and** #10 Split Lock Washer (Qty. 2) (244-5003-00)		
7	Spring Washer (17/32" ID X 3/4" X 1")	1	269-5002-00
8	Coil Support Bracket	1	535-7356-00
	Item 8 is secured to Item 1 by: #8-32 X 3/8" HWH Swage (Ser.) Zc. (Qty. 2) (237-5975-00)		
9	Coil, 23-1100 [NO DIODE] (Right)	1	090-5030-ND
	COIL DOES NOT REQUIRE A DIODE. SEE ↻ COIL NOTE BELOW FOR DETAILS.		
10	Coil Sleeve	1	545-5388-00
11	Deflector Pad (Bumper)	1	545-5428-00
12	Flipper Plunger & Link Sub-Assy.	1	515-6304-03
	For Individual Items use : Flipper Plunger (**530-5349-01**) **and** Plunger "Flipper" Link (**545-5611-01**) **and is secured to the Plunger by:** Bushing, .16" ø ID X .281" ø OD X .187" (Qty. 1) (530-5532-00) **and** Spiral Pin ø 5/32" X 3/4" Lg. (Qty. 1) (251-5015-02)		

Nr.	FLIPPER (RIGHT) PARTS	QTY.	SPI PART Nr.
13	Crank Bar	1	530-5070-02
	Item 13 requires: Bushing, .192" ø ID X .312" ø OD X .195" (Qty. 1) (530-5139-00)		
14®	Switch Actuator (**RIGHT**) Sub-Assy.	1	515-7257-**00**
	For Individual Items use : Actuator & Spring Bracket (**RIGHT**) (**535-9038-00**) **and** ® Switch Actuator (White Plastic) (**545-5612-00**) **and is secured to the Bracket by:** Rivet, 1/8" ø X 1/4" Lg. (Qty. 1) (249-5003-00)		
15	Set Screw: #10-32 X 3/4" Socket Hd.	2	237-6144-00
	Item 15 requires: #10-32 Nylon Stop Nut (Qty. 1 *Flipper Link Side Only*) (240-5203-00) **and** #10 Split Lock Washer (244-5003-00) ***Tool Required for Item 15:*** **5/32" or 4mm Allen Wrench**		

Flipper Rebuild Parts for Easier Installation, $ave $:

FRP1	**Flipper Base Plate Kit (RIGHT)** *Includes Item 1 pre-threaded, with the Securing Hardware for Items 2, 3, 6 & 8.*	515-6617-**00**
FRP2	**Plunger, Link & Crank (RIGHT) Assy.** *Includes above Items 12, 13, 14 and 15 and is pre-assembled.*	515-7203-**00**
FRP3	**Flipper (RIGHT) Rebuild Kit** *Same as **FRP2**, but also includes above Items 6 & 10.*	500-6307-**00**

ASSOCIATED PARTS **ARE NOT INCLUDED** WITH THE ABOVE ASSEMBLY.

Nr.	ASSOCIATED PART(S)	QTY.	SPI PART Nr.
AP-A	**YELLOW** Flipper Bat (Plain) & Shaft (Non-Knurled End) Assembly	1	515-5133-06-06
AP-B	Large Flipper **BLACK** Rubber Ring	1	545-5277-00

The differences between the Left & Right Flippers are:

Item 1, **Item 4**, ***and* Item 14** *(just the Bracket)*

The coils may also differ depending on the game.

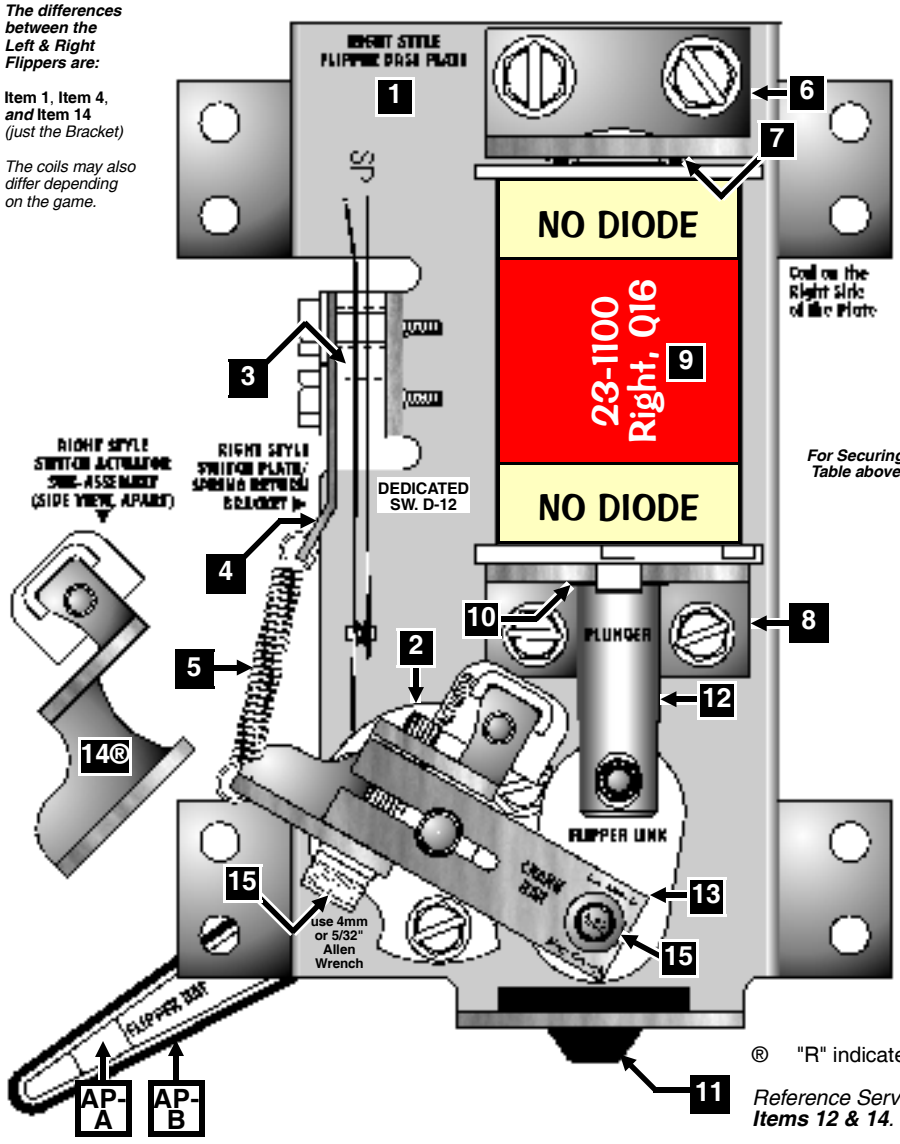

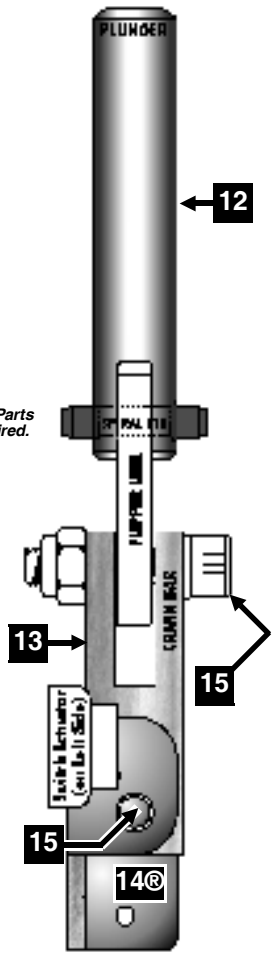

For Securing Hardware, see the Parts Table above, under the item desired.

Take Note:

® "R" indicates Item noted is secured with rivet(s) as listed.

*Reference Service Bulletin **152** for additional information on **Items 12 & 14**.*

* *To Order the Flipper (Right) Rebuild Kit ask for Part Nr.: 500-6307-00 (includes Items 6, 10, 12, 13, 14 & 15)*

Flipper (Upper Left) Assembly, 500-6543-35-NDM (Items 1-15)
and Assoc. Parts: Yellow Mini-Flipper Bat & Shaft Assy., 515-6275-06 (Items AP-A/-B)

Nr.	FLIPPER (LEFT) PARTS	QTY.	SPI PART Nr.
1	Flipper Base Plate (**LEFT**) *Modified*	1	**See FRP1**
	Item 1 is secured below the playfield by: #8 X 1/2" SHWH AB (Zc.) (Qty. 8) (234-5101-00)		
	Ordering Note: *Use Item **FRP1**, see the end of this Parts Table.*		
2	Flipper Bat Bushing (White Plastic) .25" ø I.D.	1	545-5070-00
	Item 2 is secured to Item 1 by: #6-32 X 3/8" HWH Swage (Ser.) Zc. (Qty. 3) (237-5976-02)		
3	1/4" x 3/8" Plastic Spacer Gray	2	254-5000-02
	Item 3 is secured to Item 1 by: #6-32 X 5/8" HWH Swage (Ser.) Zc. (Qty. 2) (237-5976-04)		
4	Sw. Plate/Spring Return Brkt. (**LEFT**)	1	535-7354-**01**
5	Flipper Return Spring	1	265-5035-00
6	Coil Stop Bracket Sub-Assembly	1	515-6308-01
	Item 6 is secured to Item 1 by: #10-32 X 3/8" SHWH Swage (Serr) Zinc (Qty. 2) (237-5985-00) **and** #10 Split Lock Washer (Qty. 2) (244-5003-00)		
7	Spring Washer (17/32" ID X 3/4" X 1")	1	269-5002-00
8	Coil Support Bracket	1	535-7356-00
	Item 8 is secured to Item 1 by: #8-32 X 3/8" HWH Swage (Ser.) Zc. (Qty. 2) (237-5975-00)		
9	Coil, 23-1500 [NO DIODE] (Left)	1	090-5062-ND
	COIL DOES NOT REQUIRE A DIODE. SEE ↻ COIL NOTE BELOW FOR DETAILS.		
10	Coil Sleeve	1	545-5388-00
11	Deflector Pad (Bumper)	1	545-5428-00
12	Flipper Plunger & Link Sub-Assy.	1	515-6304-03
	For Individual Items use : Flipper Plunger (**530-5349-01**) **and** Plunger "Flipper" Link (**545-5611-01**) **and is secured to the Plunger by:** Bushing, .16" ø ID X .281" ø OD X .187" (Qty. 1) (530-5532-00) **and** Spiral Pin ø 5/32" X 3/4" Lg. (Qty. 1) (251-5015-02)		

Nr.	FLIPPER (LEFT) PARTS	QTY.	SPI PART Nr.
13	Crank Bar	1	530-5070-02
	Item 13 requires: Bushing, .192" ø ID X .312" ø OD X .195" (Qty. 1) (530-5139-00)		
14®	Switch Actuator (**LEFT**) Sub-Assy.	1	515-7257-**01**
	For Individual Items use : Actuator & Spring Bracket (**LEFT**) (**535-9038-01**) **and** ® Switch Actuator (White Plastic) (**545-5612-00**) **and is secured to the Bracket by:** Rivet, 1/8" ø X 1/4" Lg. (Qty. 1) (249-5003-00)		
15	Set Screw: #10-32 X 3/4" Socket Hd.	2	237-6144-00
	Item 15 requires: #10-32 Nylon Stop Nut (Qty. 1 *Flipper Link Side Only*) (240-5203-00) **and** #10 Split Lock Washer (244-5003-00) ***Tool Required for Item 15:*** **5/32" or 4mm Allen Wrench**		

Flipper Rebuild Parts for Easier Installation, $ave $:

FRP1	**Flipper Base Plate Kit (LEFT)** *Modified* *Includes Item 1 pre-threaded, with the Securing Hardware for Items 2, 3, 6 & 8.*	**515-6617-01-93**
FRP2	**Plunger, Link & Crank (LEFT) Assy.** *Includes above Items 12, 13, 14 and 15 and is pre-assembled.*	515-7203-**01**
FRP3	**Flipper (LEFT) Rebuild Kit** *Same as **FRP2**, but also includes above Items 6 & 10.*	500-6307-**10**

ASSOCIATED PARTS **ARE NOT INCLUDED** WITH THE ABOVE ASSEMBLY.

Nr.	ASSOCIATED PART(S)	QTY.	SPI PART Nr.
AP-A	**YELLOW** Mini-Flipper Bat (Plain) & Shaft (Non-Knurled End) Assembly	1	515-6275-06
AP-B	Small Flipper **BLACK** Rubber Ring	1	545-5207-00

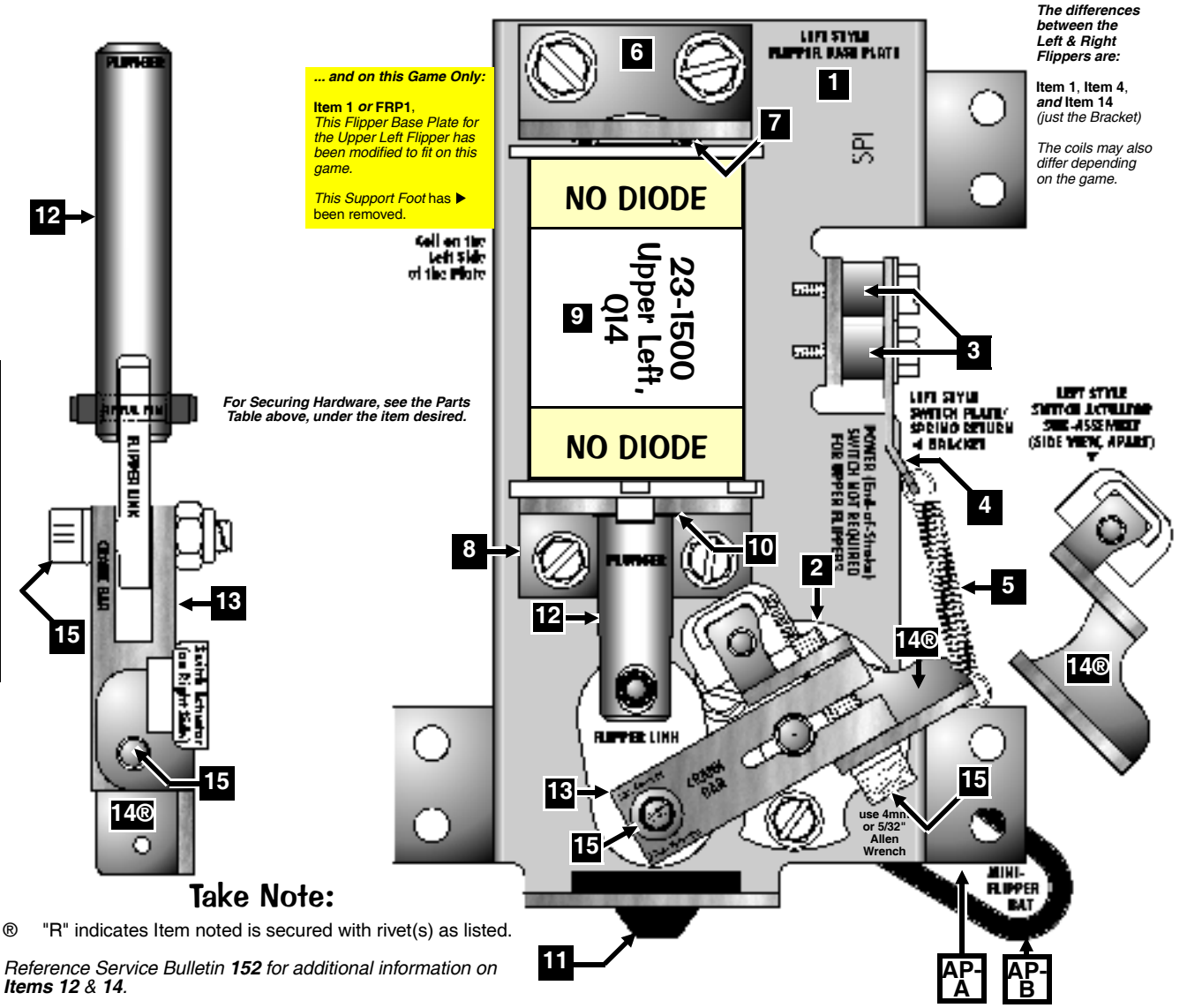

Take Note:

® "R" indicates Item noted is secured with rivet(s) as listed.

*Reference Service Bulletin **152** for additional information on **Items 12** & **14**.*

** To Order the Flipper (Left) Rebuild Kit ask for Part Nr.: 500-6307-10 (includes Items 6, 10, 12, 13, 14 & 15)*

Bumper Top, Bumper Bottom & Bumper Switch Individual Parts Only (Items 1-18) and Associated Part: See Parts Table Below.

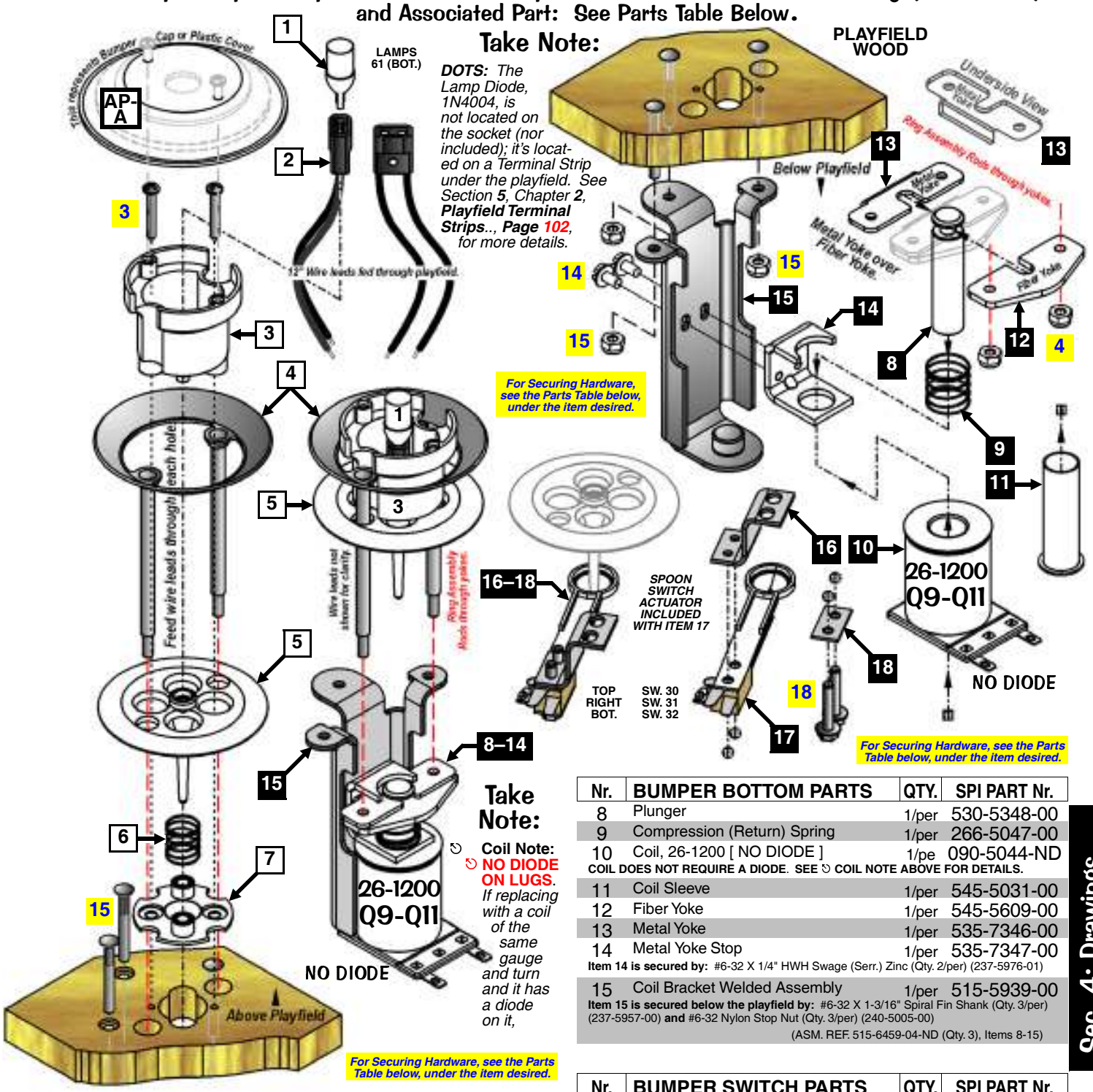

Nr.	BUMPER TOP PARTS	QTY.	SPI PART Nr.
1	LED Module (WHT) (6.3v) Wedge Base	1	112-5024-08
2	Wedge Base Socket	1	077-5206-00
3	Bumper Body	1/per	545-5197-00
	Item 3 is secured above the P/F by: #5 X 7/8" PRH AB (Zinc) (Qty. 2/per) (237-5826-00)		
4	Ring Assembly	1/per	515-5085-00
	Item 4 is secured by: #6-32 Nylon Stop Nut (Qty. 2/per) (240-5005-00)		
5	Bumper Skirt (Switch Actuator)	1/per	545-5607-00
6	Bumper Skirt Compression Spring	1/per	266-5048-00
7	Bumper Base	1/per	545-5195-00
	(ASM. REF. 515-6459-**01L** (Qty. 1), Items 1-7; 515-6459-**00** (Qty. 2), Items 3-7)		

The Top & Bottom Assemblies are secured together by hardware noted in Item 4.

Nr.	BUMPER BOTTOM PARTS	QTY.	SPI PART Nr.
8	Plunger	1/per	530-5348-00
9	Compression (Return) Spring	1/per	266-5047-00
10	Coil, 26-1200 [NO DIODE]	1/pe	090-5044-ND
	COIL DOES NOT REQUIRE A DIODE. SEE ↻ COIL NOTE ABOVE FOR DETAILS.		
11	Coil Sleeve	1/per	545-5031-00
12	Fiber Yoke	1/per	545-5609-00
13	Metal Yoke	1/per	535-7346-00
14	Metal Yoke Stop	1/per	535-7347-00
	Item 14 is secured by: #6-32 X 1/4" HWH Swage (Serr.) Zinc (Qty. 2/per) (237-5976-01)		
15	Coil Bracket Welded Assembly	1/per	515-5939-00
	Item 15 is secured below the playfield by: #6-32 X 1-3/16" Spiral Fin Shank (Qty. 3/per) (237-5957-00) **and** #6-32 Nylon Stop Nut (Qty. 3/per) (240-5005-00)		
	(ASM. REF. 515-6459-04-ND (Qty. 3), Items 8-15)		

Nr.	BUMPER SWITCH PARTS	QTY.	SPI PART Nr.
16	Switch Bracket	1/per	535-7342-00
	Item 16 is secured by: #8 X 1/2" HWH AB (Zinc) (Qty. 2/per) (234-5101-00)		
17	Bumper Stack (Blade) Switch Assy.	1/per	180-5015-04
	Included with Item 17 : Spoon Switch Actuator (**545-5610-02**). Switch has a Diode (1N4004) (112-5003-00). *Can be replaced with (1N4001) (112-5001-00).*		
18	Switch Body Protect Plate	1/per	535-7344-00
	Items 17 & 18 are secured by: #6-32 X 3/4" HWH Swage (Serr) Zc. (Qty. 2) (237-5976-05)		
	(ASM. REF. 515-6459-09 (Qty. 3), Items 16-18)		

ASSOCIATED PARTS **ARE NOT INCLUDED** WITH THE ABOVE ASSEMBLIES.

Nr.	ASSOCIATED PART(S)	QTY.	SPI PART Nr.
AP-A	Bumper [Pop] Cap *(Multi-Colors)*	1/per	550-5057-XX
	Replace -XX in the part number with -01 (Clear); -02 (Red); -05 (Blue) Location: Pg. 48		
	Item AP-A is secured by: #4 X 3/4" PRH (Zinc) T-25 (Qty. 2/per) (237-5873-00)		

Slingshot (Left & Right) Assemblies, 500-5849-02-ND (Qty. 2) (Items 1-9)

Nr.	SLINGSHOT PARTS	QTY.	SPI PART Nr.
1	Slingshot Bracket Assembly	1/per	515-5339-01
	Item 1 is secured below the playfield by: #8 X 1/2" SHWH AB (Zc.) (Qty. 3) (234-5101-00)		
2	Coil Retaining Bracket	1/per	535-5203-03
	Item 2 is secured to Item 1 by: #8-32 X 3/8" PPH MS (Sems) (Qty. 2) (232-5301-00)		
3	Coil, 27-1500 [NO DIODE]	1/per	090-5004-ND
	COIL DOES NOT REQUIRE A DIODE. SEE ⍉ COIL NOTE BELOW FOR DETAILS.		
4	Coil Sleeve	1/per	545-5031-00
5	Plunger & Link Assembly	1/per	515-5338-00
	For Individual Items use : Plunger 2" Lg. (**530-5025-01**), Plunger Link (**545-5293-00**) **and** Roll Pin 1/8" ø x 5/8" Lg. (**251-5008-00**) **The Plunger Link is secured to the Riveted Arm by:** Retaining Ring, 1/4" ø Shaft (Qty. 1) (270-5002-00)		
	Ordering Note: *If* **515-5338-00** *is unavailable,* order the individual part(s) actually required.		

Nr.	SLINGSHOT PARTS	QTY.	SPI PART Nr.
6	Compression (Return) Spring	1/per	266-5020-00
7	Slingshot Stack (Blade) Switch	2/per	180-5054-00
	Only **1** of the 2 Switches has a Diode (1N4004) (112-5003-00). *See Note Below on Drawing. Can be replaced with (1N4001) (112-5001-00).*		
8	Switch Body Protect Plate	2/per	535-5045-00
	Items 7 & 8 are secured to Item 1 by: #6-32 X 5/8" HWH Swage (Qty. 4) (237-5976-04)		
9®	Riveted Arm & Tip Assembly	1/per	515-5340-01
	For Individual Parts use (requires drilling out rivet & rereviting) : Arm (**515-5341-01**), Kicker Tip (**545-5216-01**) **and** Rivet, 1/8" ø x 1/4" Lg. (**249-5003-00**) **The Riv. Arm is secured to Item 1 by:** Retaining Ring, 1/4" ø Shaft (Qty. 1) (270-5002-00)		
	Ordering Note: *If* **515-5340-01** *is unavailable,* order the individual part(s) actually required.		
	Ordering Note: *If* ***500-5849-02-ND*** *is unavailable, order the individual part(s) actually required. This assembly is identical to* ***500-5849-00-ND*** *with the exception of* ***Item 3****, which uses a Coil, 23-800 [NO DIODE] (****090-5001-ND****) instead.*		

Take Note:

⍉ **Coil Note:** ⍉ **NO DIODE ON LUGS**. *If replacing with a coil of the same gauge and turn and it has a diode on it, remove it before using.*

® "R" indicates Item noted is secured with rivet(s) as listed.

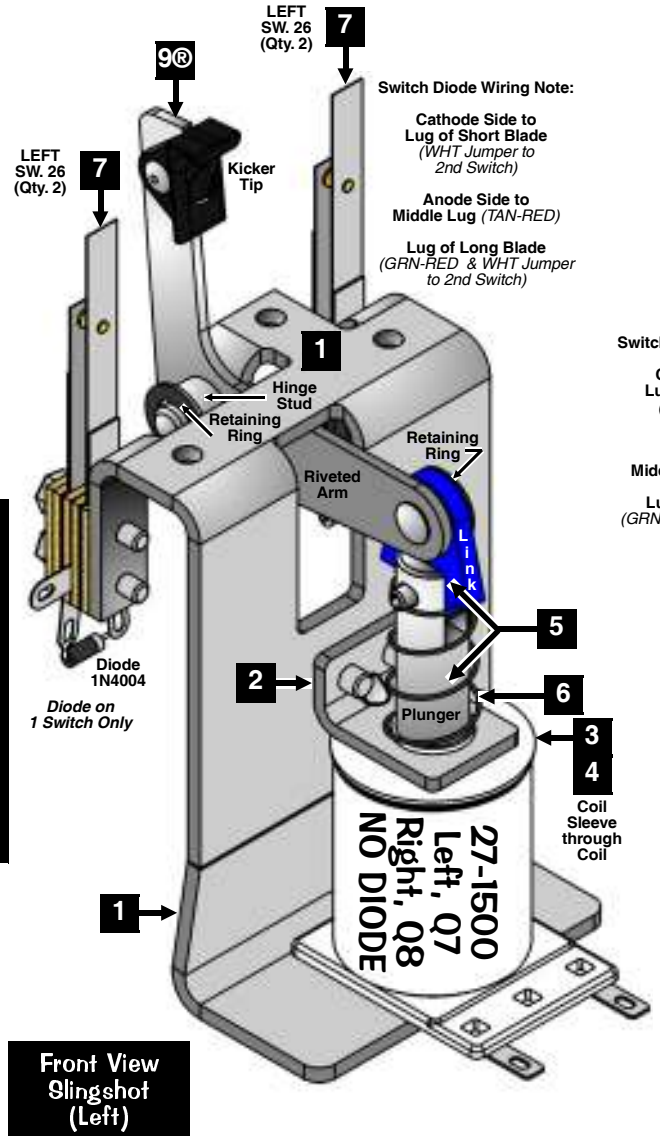

Front View Slingshot (Left)

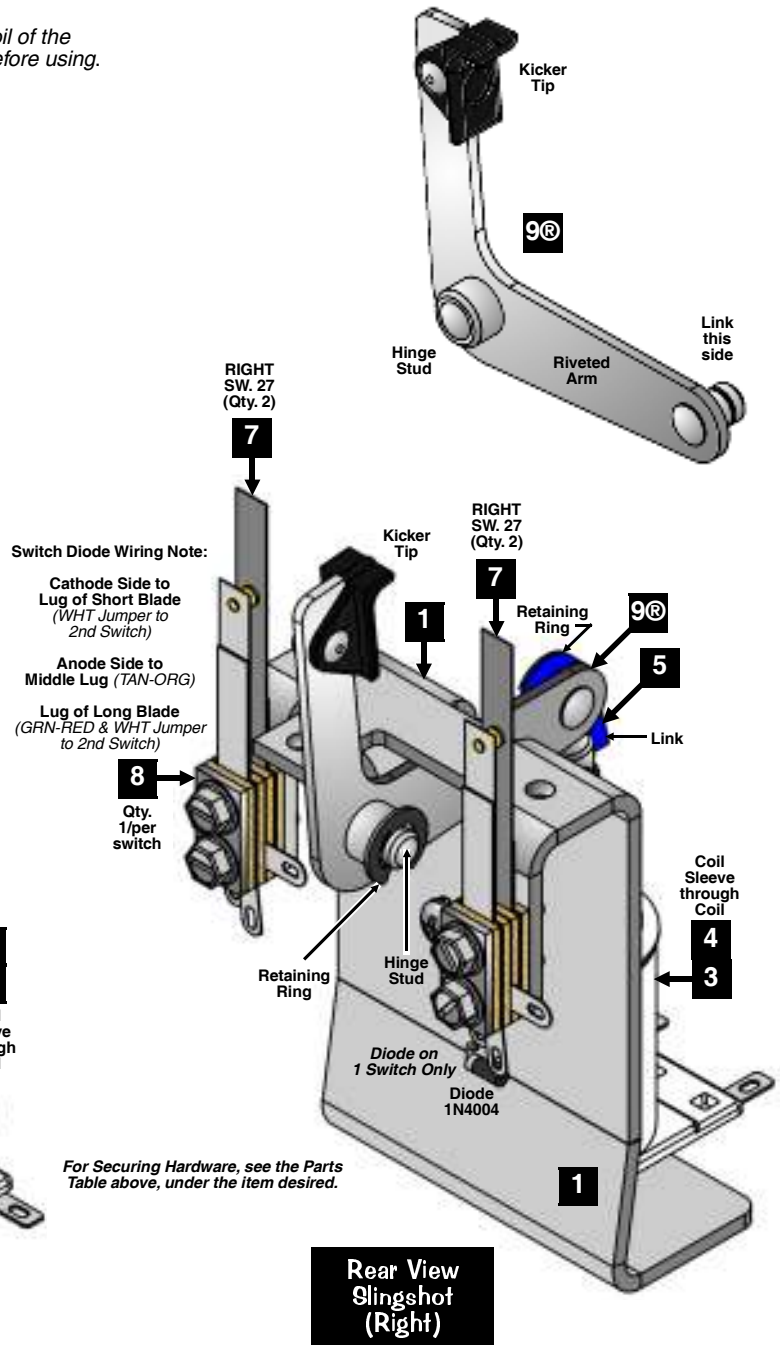

For Securing Hardware, see the Parts Table above, under the item desired.

Rear View Slingshot (Right)

Sec. 4: Drawings ...

Up/Down Death Post Assembly, 500-7022-00 (Items 1-14)

When energized, the Up/Down Post prevents the ball from draining between the lower flippers.

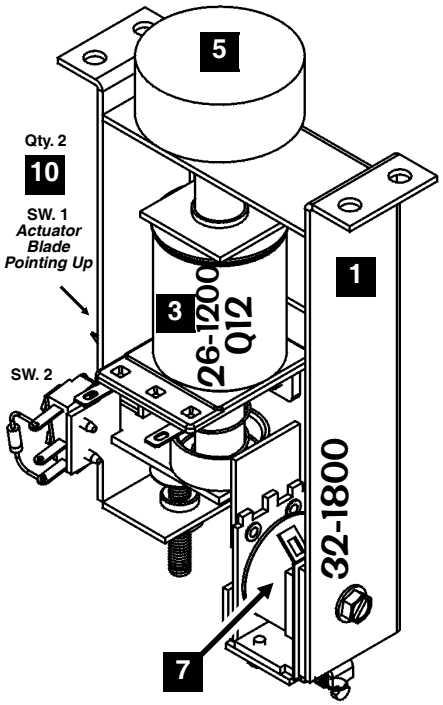

Assembled View

For Securing Hardware, see the Parts Table below, under the item desired.

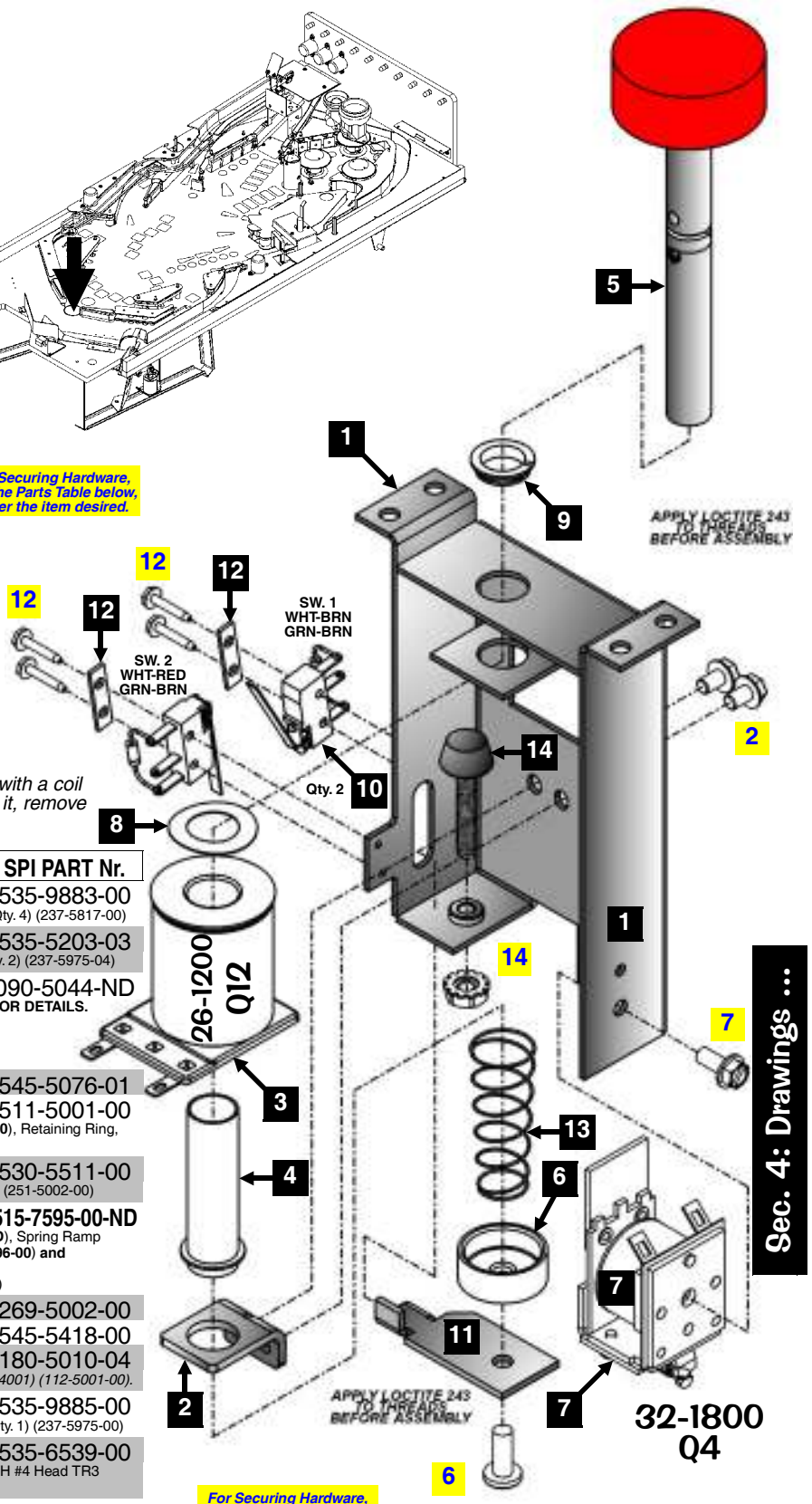

For Securing Hardware, see the Parts Table (left), under the item desired.

Exploded View

Take Note:

↻ **Coil Note:** ↻ **NO DIODE ON LUGS**. *If replacing with a coil of the same gauge and turn and it has a diode on it, remove it before using.*

Nr.	UP/DOWN POST PARTS	QTY.	SPI PART Nr.
1	Bracket, Coil Mounting	1	535-9883-00
	Item 1 is secured below the playfield by: #10 X 1/2" HWH A (Zinc) (Qty. 4) (237-5817-00)		
2	Coil Retaining Bracket	1	535-5203-03
	Item 2 is secured by: #8-32 X 1/4" SHWH Swage Ser. (Zinc) Wax (Qty. 2) (237-5975-04)		
3	Coil, 26-1200 [NO DIODE]	1	090-5044-ND
	COIL DOES NOT REQUIRE A DIODE. SEE ↻ COIL NOTE ABOVE FOR DETAILS.		
4	Coil Sleeve *(Formost #10-7077)*	1	545-5076-01
5	Up/Down Post Shaft + Bumper Asm.	1	511-5001-00
	For Individual Items use : Up/Down Post Shaft Sub-Asm. (**515-7597-00**), Retaining Ring, 1/4" ø (**270-5002-00**) **and** Bumper (Red Plastic) (**550-5029-02**)		
6	Plunger Head	1	530-5511-00
	Item 6 is secured by: #18-8 SS S/Pin 92373A143 3/32" X 1/2" (Qty. 1) (251-5002-00)		
7	Mini-Coil, Latch & Frame Assembly	1	**515-7595-00-ND**
	For Individual Items use : Coil, **32-1800** [No Diode] (**090-5031-00-ND**), Spring Ramp Lock Up SPR29-12 (**265-5024-00**), Latch–Armature Assembly (**515-7596-00**) **and** Trip Coil Frame (535-6198-00) **Item 7 is secured by:** #10 X 1/2" PPH MS (Zinc) (Qty. 1) (237-5702-00)		
8	Spring Washer [17/32" ID X 7/8" X 1/64"]	1	269-5002-00
9	Nyliner [7/16" Shaft, 7L1-FF]	1	545-5418-00
10	Switch, 1-1/4" Actuator	2	180-5010-04
	Switch has a Diode (1N4004) (112-5003-00). *Can be replaced with (1N4001) (112-5001-00).*		
11	Bracket (Flag), Switch Mounting	1	535-9885-00
	Item 11 is secured by: #8-32 X 3/8" SHWH Swage Ser. (Zinc) Wax (Qty. 1) (237-5975-00)		
12	Switch Body Protect Plate	2	535-6539-00
	Item 12 is secured to Items 10-11 by: #2-56 X 1/2" Unslotted Ser. HWH #4 Head TR3 Black (Qty. 2) (237-5937-02)		
13	Compression (Relay) Spring	1	266-5020-00
14	#10-32 Adj. Spindle Stop w/Rubber Tip	1	280-5014-00
	Item 14 is secured by: #10-32 Keps Nut (Qty. 1) (240-5208-00)		

Ordering Note: *If **500-7022-00** is unavailable, order the individual part(s) actually required (for cable wiring (036-5523-14-93) to be included with 500-7022-00 Asm., add **-93** to Part #).*

Scoop & Vertical Up-Kicker (VUK) Assembly, 500-7028-00 (Items 1-10)

When the ball enters the scoop, the VUK is energized and ejects the ball out.

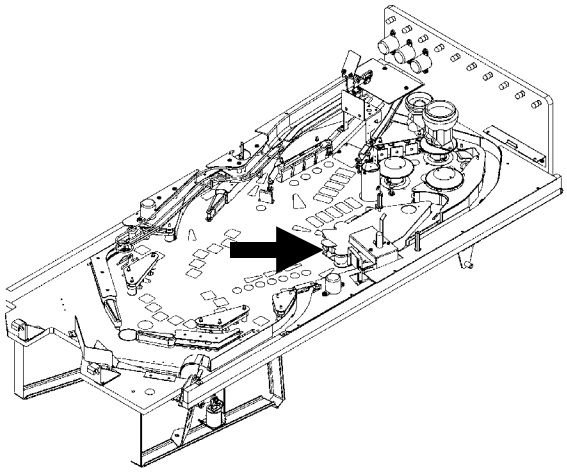

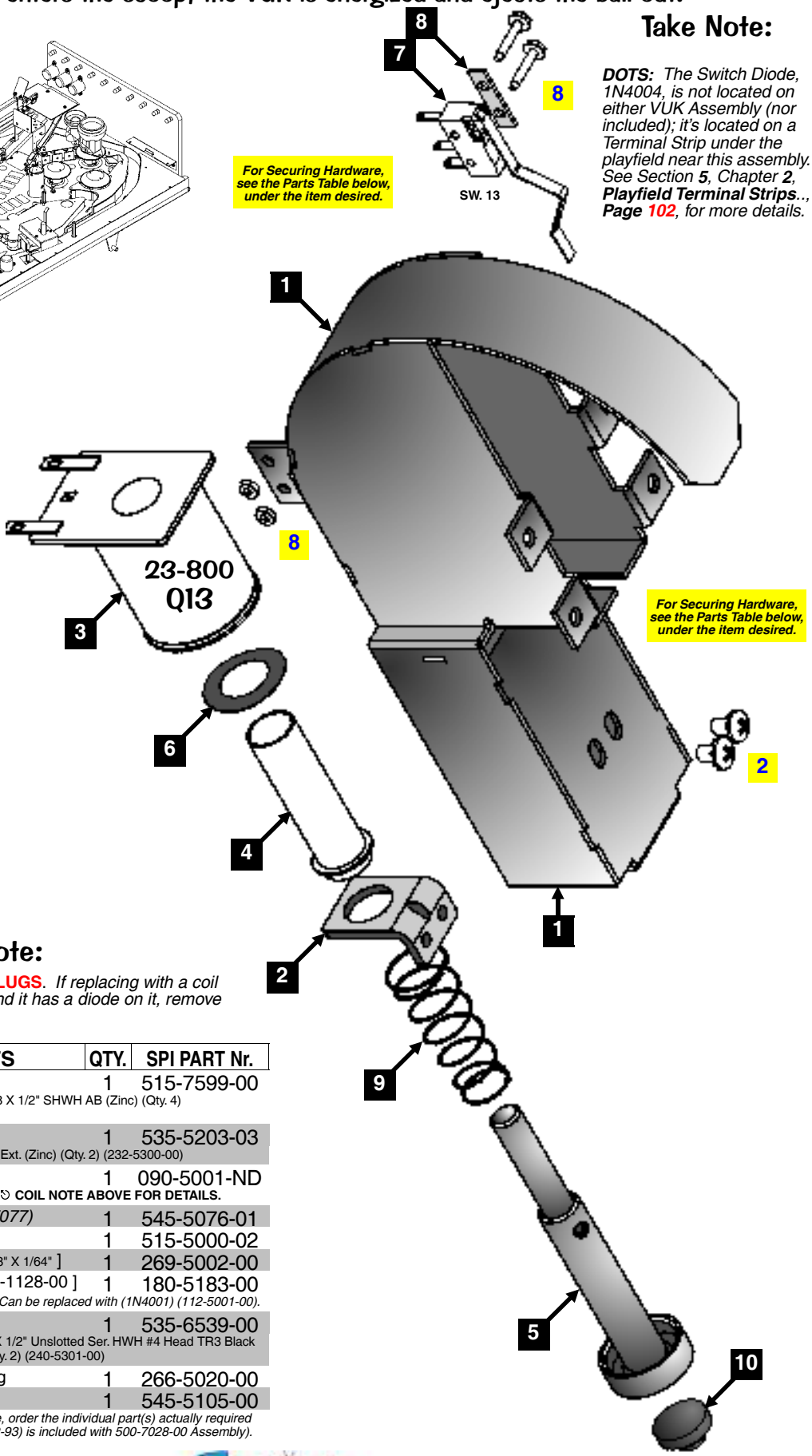

For Securing Hardware, see the Parts Table below, under the item desired.

For Securing Hardware, see the Parts Table below, under the item desired.

Take Note:

DOTS: *The Switch Diode, 1N4004, is not located on either VUK Assembly (nor included); it's located on a Terminal Strip under the playfield near this assembly. See Section **5**, Chapter **2**, **Playfield Terminal Strips**.., **Page** 102, for more details.*

Take Note:

⏲ **Coil Note:** ⏲ **NO DIODE ON LUGS**. *If replacing with a coil of the same gauge and turn and it has a diode on it, remove it before using.*

Nr.	SCOOP & VUK PARTS	QTY.	SPI PART Nr.
1	Bracket, Scoop Weldment	1	515-7599-00
	Item 1 is secured below the playfield by: #8 X 1/2" SHWH AB (Zinc) (Qty. 4) (234-5101-00)		
2	Coil Retaining Bracket	1	535-5203-03
	Item 2 is secured by: #8-32 X 1/4" PPH MS Ext. (Zinc) (Qty. 2) (232-5300-00)		
3	Coil, 23-800 [NO DIODE]	1	090-5001-ND
	COIL DOES NOT REQUIRE A DIODE. SEE ⏲ COIL NOTE ABOVE FOR DETAILS.		
4	Coil Sleeve *(Formost #10-7077)*	1	545-5076-01
5	Plunger Assembly	1	515-5000-02
6	Spring Washer [17/32" ID X 7/8" X 1/64"]	1	269-5002-00
7	Switch (Scoop), [Happ #95-1128-00]	1	180-5183-00
	Switch has a Diode (1N4004) (112-5003-00). *Can be replaced with (1N4001) (112-5001-00).*		
8	Switch Body Protect Plate	1	535-6539-00
	Item 8 is secured to Items 1 & 7 by: #2-56 X 1/2" Unslotted Ser. HWH #4 Head TR3 Black (Qty. 2) (237-5937-02) **and** #2-56 Hex Nut (Qty. 2) (240-5301-00)		
9	Compression (Relay) Spring	1	266-5020-00
10	Rubber Bumper (Grommet)	1	545-5105-00

Ordering Note: *If **500-7028-00** is unavailable, order the individual part(s) actually required (cable wiring (036-5523-13-93 & 036-5523-12-93) is included with 500-7028-00 Assembly).*

Eject / Vertical Up-Kicker (VUK) Assembly, 500-6846-01 (Items 1-10)

When the ball enters the eject hole, the VUK is energized and ejects the ball out.

Take Note:

DOTS: *The Switch Diode, 1N4004, is not located on either VUK Assembly (nor included); it's located on a Terminal Strip under the playfield near this assembly. See Section **5**, Chapter **2**, **Playfield Terminal Strips**.., **Page** 102, for more details.*

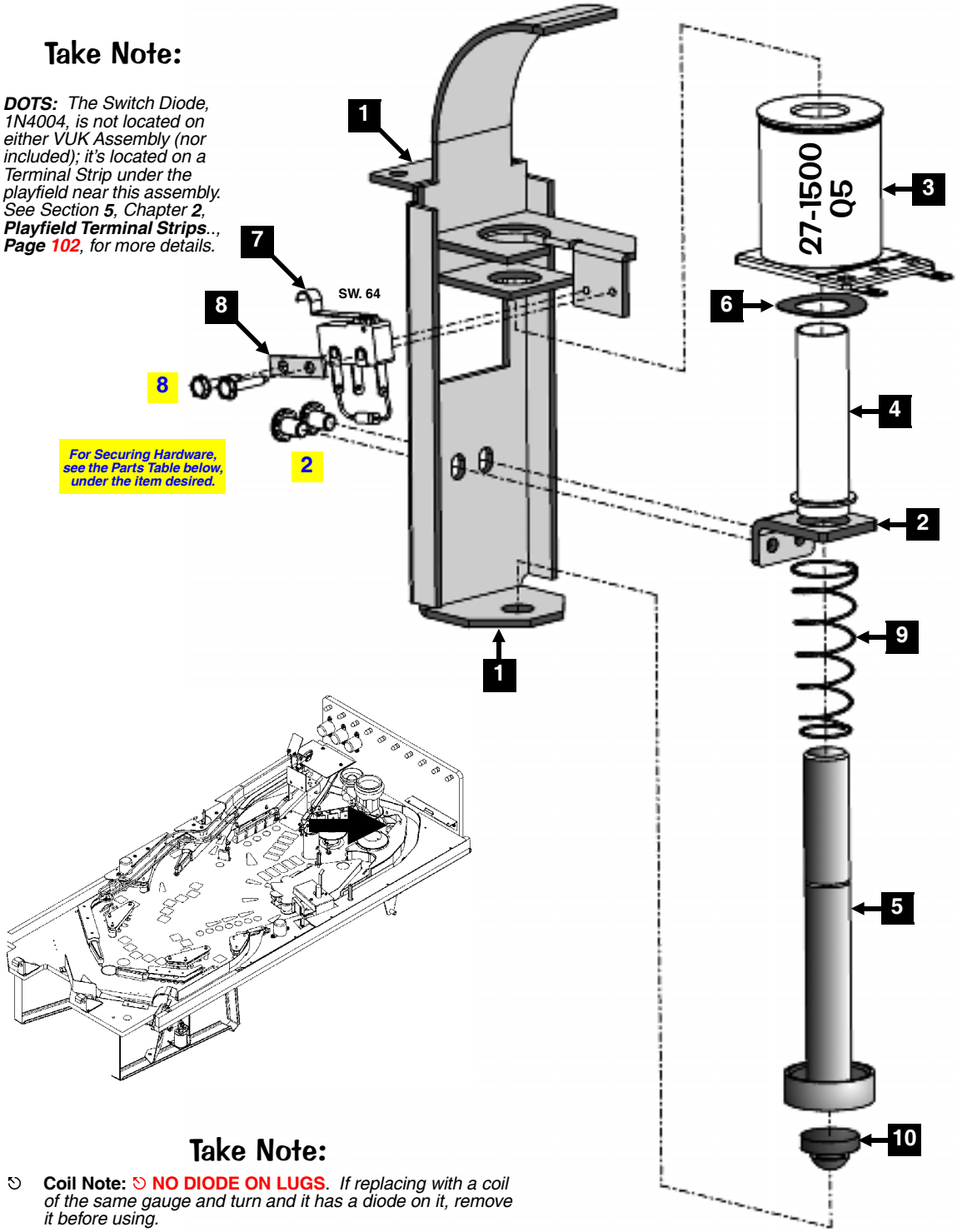

Take Note:

↻ **Coil Note:** ↻ **NO DIODE ON LUGS**. *If replacing with a coil of the same gauge and turn and it has a diode on it, remove it before using.*

Nr.	SCOOP & VUK PARTS	QTY.	SPI PART Nr.
1	Bracket, Eject VUK Housing	1	535-9637-01
	Item 1 is secured below the playfield by: #8 X 5/8" PPH AB (Zinc) (Qty. 3) (232-5101-00)		
2	Coil Retaining Bracket	1	535-5203-03
	Item 2 is secured by: #8-32 X 1/4" PPH MS Ext. (Zinc) (Qty. 2) (232-5300-00)		
3	Coil, 27-1500 [NO DIODE]	1	090-5004-ND
	COIL DOES NOT REQUIRE A DIODE. SEE ↻ COIL NOTE ABOVE FOR DETAILS.		
4	Coil Sleeve *(Formost #10-7077)*	1	545-5076-01
5	Steel & Nylon Plunger Assembly	1	515-5941-01
6	Spring Washer [17/32" ID X 7/8" X 1/64"]	1	269-5002-00
7	Switch, Actuator Simulated Roller	1	180-5209-00
	Switch [Omron 100MA SS01GL1373FT] has a Diode (1N4004) (112-5003-00). *Can be replaced with (1N4001) (112-5001-00).*		
8	Switch Body Protect Plate	1	535-6539-00
	Item 8 is secured to Items 1 & 7 by: #2-56 X 1/2" Unslotted Ser. HWH #4 Head TR3 Black (Qty. 2) (237-5937-02)		
9	Compression (Relay) Spring	1	266-5020-00
10	Rubber Bumper (Grommet)	1	545-5105-00

Ordering Note: *If **500-6846-01** is unavailable, order the individual part(s) actually required (for cable wiring (036-5523-09-93) to be included with 500-6846-01 Asm., add **-93** to Part #).*

1-Bank Drop Target Assembly, 500-7029-01 (Items 1-14)

[Different Views & Parts Table on the next page.]

Coil Side Exploded View

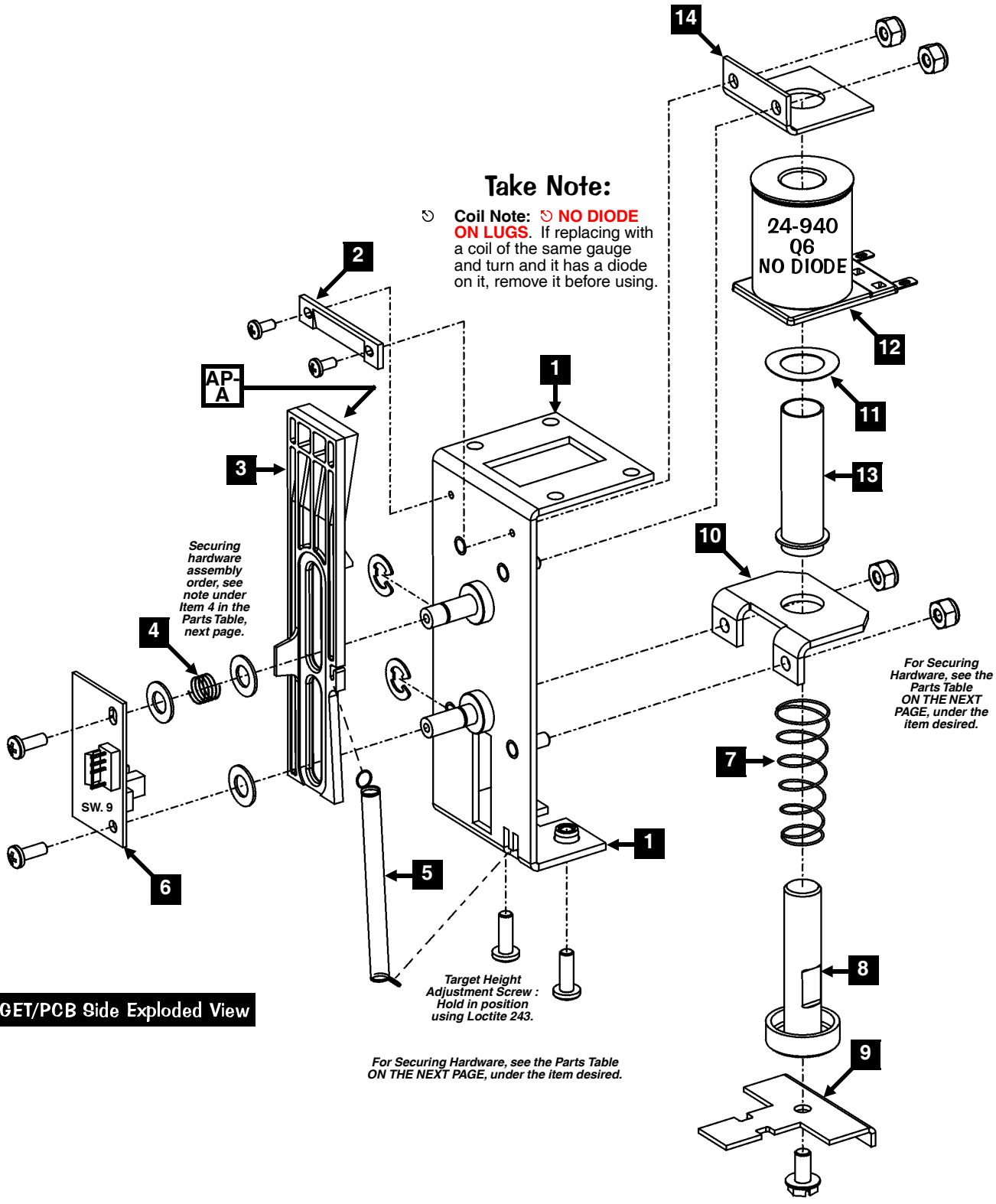

Take Note:

Coil Note: **NO DIODE ON LUGS**. If replacing with a coil of the same gauge and turn and it has a diode on it, remove it before using.

TARGET/PCB Side Exploded View

1-Bank Drop Target Assembly, 500-7029-01 (Items 1-14) Continued
and Associated Part : See Parts Table Below [Different Views on the previous page.]

ASSOCIATED PARTS **ARE NOT INCLUDED** WITH THE ABOVE ASSEMBLY.

Nr.	1-BANK DROP TRGT. PARTS	QTY.	SPI PART Nr.
1	Frame & Pem Weldment, 1-Bank D/T	1	515-7604-**01**
	Item 1 is secured under the playfield by: #8 X 1/2" SHWH AB (Zc.) (Qty. 4) (234-5101-00)		
2	Target Rest Ledge (Blk.), 1-Bank D/T	1	545-6163-**01**
	Item 2 is secured to Item 1 by: #4-40 X 1/4" PPH MS (Zinc) (Qty. 2) (237-6169-00)		
3	Drop Target (Black Plastic) Rollover	1	545-6162-00
4	Compression (Short) Spring	1	266-5089-00
	Items 3 & 4 are secured to Item 1 @ top by: Washer, 1/2" X 17/64" X .03" (Qty. 2) (242-5091-00) **and** Retaining Ring, 1/4" ø (Qty. 1) (270-5002-00)		
	FRAME PEM —> WASHER —> SPRING —> WASHER —> RETAINING RING —> OPTO PCB —> SCREW		
	Item 3 is secured to Item 1 @ bottom by: Washer, 1/2" X 17/64" X .03" (Qty. 1) (242-5091-00) **and** Retaining Ring, 1/4" ø (Qty. 1) (270-5002-00)		
5	Reset (Long) Spring (Red Dipped)	1	265-5003-02
6	PCB, Slotted OPTO X1	1	520-5252-01
	Item 6 is secured to Item 1 by: #6-32 X 3/8" PPH MS (Zinc) (Qty. 2) (237-5501-00)		
7	Compression (Return) Spring	1	266-5020-00
8	Steel Plunger with End Cap	1	530-5757-00
9	Bracket, Target Lift (1-Bank)	1	**535-9760-01A**
	Item 9 is secured to Item 8 Plunger by: #10-32 X 3/8" SHWH Swage (Zinc) Wax (Qty. 1) (237-5985-00) TARGET HEIGHT ADJUSTMENT:		
	Item 9 is adjusted through Item 1 by: #8-32 X 1/2" PPH MS (Zinc) (Qty. 2) (237-5602-00)		
10	Coil Mounting Bracket [1-Bank Style]	1	**535-9777-01**
	Item 10 is secured to Item 1 by: #8-32 Nylon Stop Nut (Qty. 2) (240-5102-00)		
11	Spring Washer (17/32" ID X 3/4" X 1")	1	269-5002-00
12	Coil, 24-940 [NO DIODE]	1	090-5036-ND
	COIL DOES NOT REQUIRE A DIODE. SEE ↻ COIL NOTE ABOVE FOR DETAILS.		
13	Coil Sleeve (Formost #10-7077)	1	545-5076-01
14	Bracket, Plunger Stop	1	535-9959-00
	Item 14 is secured to Item 1 by: #8-32 Nylon Stop Nut (Qty. 2) (240-5102-00)		

Ordering Note: *If **500-7029-01** is unavailable, order the individual part(s) actually required (for cable wiring, use Part Number 036-5523-15-93).*

Nr.	ASSOCIATED PART(S)	QTY.	SPI PART Nr.
AP-A	***Kit:* Decals** *(incl. -26 Drop Target)*	1	802-5000-93

Note: *Individual Decals (820-6394-XX) are not available individually, ordering of kit is required.*

Take Note:

↻ **Coil Note:** ↻ **NO DIODE ON LUGS**. *If replacing with a coil of the same gauge and turn and it has a diode on it, remove it before using.*

TARGET/PCB Side Asm'd View

For Securing Hardware, see the Parts Table ABOVE, under the item desired.

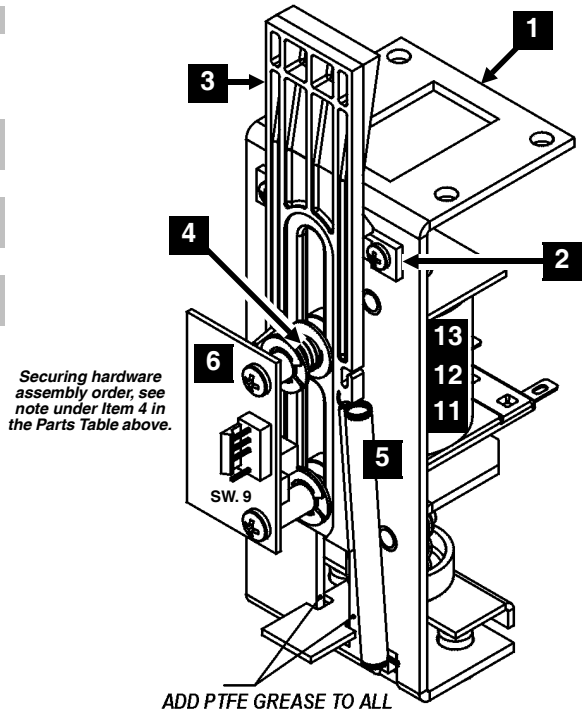

Securing hardware assembly order, see note under Item 4 in the Parts Table above.

ADD PTFE GREASE TO ALL CONTACT AREAS AROUND SLOT P/N 000-0646-00 MAGNALUBE-G OR EQUIVALENT

Coil Side Assembled View

For Securing Hardware, see the Parts Table ABOVE, under the item desired.

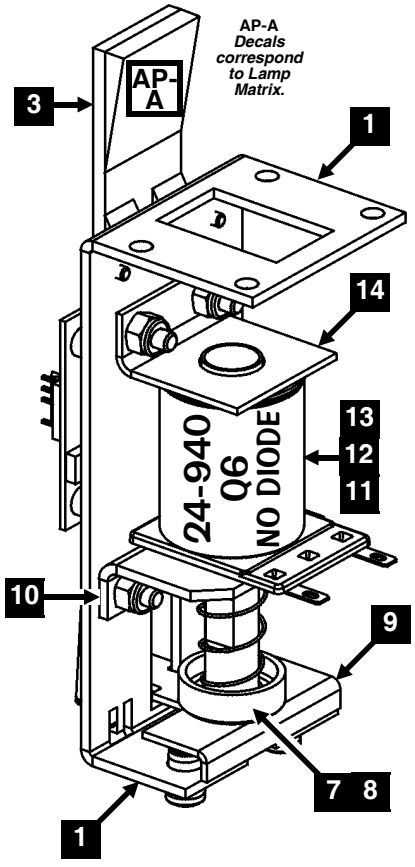

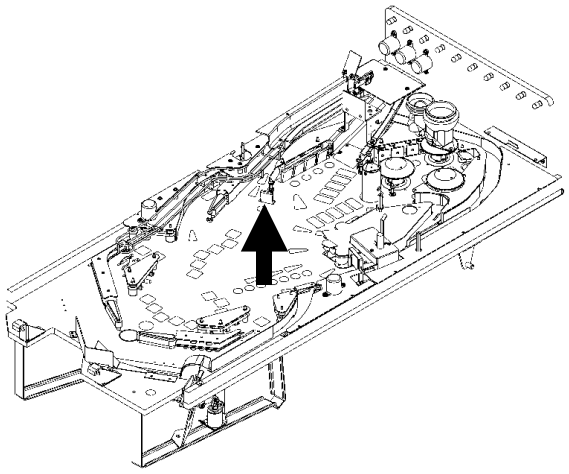

4-Bank Drop Target Assembly, 500-7029-04 (Items 1-14)

[Different Views & Parts Table on the next page.]

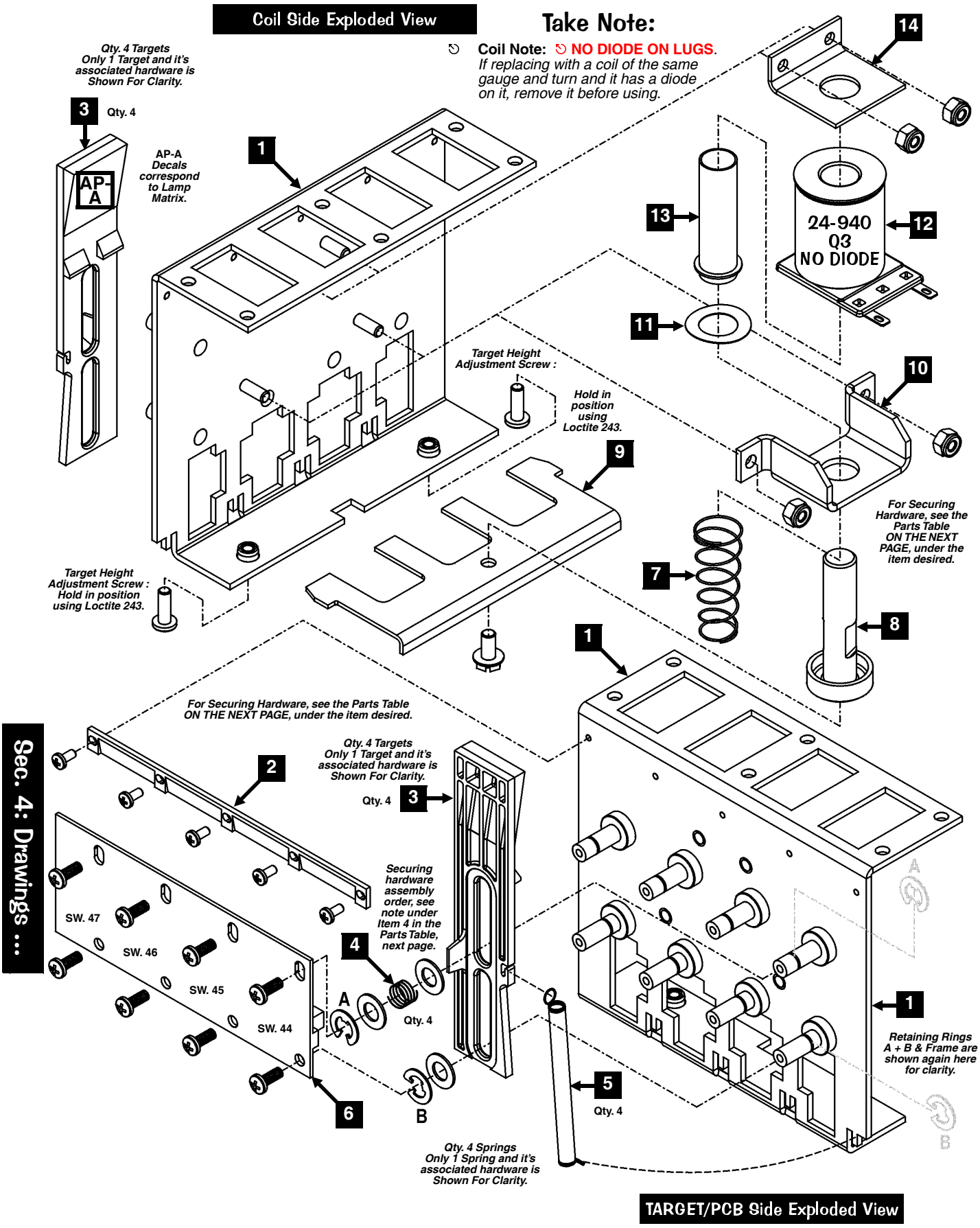

4-Bank Drop Target Assembly, 500-7029-04 (Items 1-14fp) Continued
and Associated Part: See Parts Table Below [Different Views on the previous page.]

ASSOCIATED PARTS **ARE NOT INCLUDED** WITH THE ABOVE ASSEMBLY.

Nr.	4-BANK DROP TRGT. PARTS	QTY.	SPI PART Nr.
1	Frame & Pem Weldment, 4-Bank D/T	1	515-7604-04
	Item 1 is secured under the playfield by: #8 X 1/2" SHWH AB (Zc.) (Qty. 5) (234-5101-00)		
2	Target Rest Ledge (Blk.), 4-Bank D/T	1	545-6163-04
	Item 2 is secured to Item 1 by: #4-40 X 1/4" PPH MS (Zinc) (Qty. 6) (237-6169-00)		
3	Drop Target (Black Plastic) Rollover	4	545-6162-00
4	Compression (Short) Spring	4	266-5089-00
	Items 3 & 4 are secured to Item 1 @ top by: Washer, 1/2" X 17/64" X .03" (Qty. 2/per) (242-5091-00) **and** Retaining Ring, 1/4" ø (Qty. 4) (270-5002-00)		
	FRAME PEM —> WASHER —> SPRING —> WASHER —> RETAINING RING —> OPTO PCB —> SCREW		
	Item 3 is secured to Item 1 @ bottom by: Washer, 1/2" X 17/64" X .03" (Qty. 4) (242-5091-00) **and** Retaining Ring, 1/4" ø (Qty. 4) (270-5002-00)		
5	Reset (Long) Spring (Red Dipped)	4	265-5003-02
6	PCB, Slotted OPTO X4	1	520-5252-04
	Item 6 is secured to Item 1 by: #6-32 X 3/8" PPH MS (Zinc) (Qty. 9) (237-5501-00)		
7	Compression (Return) Spring	1	266-5020-00
8	Steel Plunger with End Cap	1	530-5757-00
9	Bracket, Target Lift (4-Bank)	1	535-9996-04
	Item 9 is secured to Item 8 Plunger by: #10-32 X 3/8" SHWH Swage (Zinc) Wax (Qty. 1) (237-5985-00) TARGET HEIGHT ADJUSTMENT:		
	Item 9 is adjusted through Item 1 by: #8-32 X 1/2" PPH MS (Zinc) (Qty. 2) (237-5602-00)		
10	Coil Mounting Bracket [2+ Bank Style]	1	535-9995-01
	Item 10 is secured to Item 1 by: #8-32 Nylon Stop Nut (Qty. 2) (240-5102-00)		
11	Spring Washer (17/32" ID X 3/4" X 1")	1	269-5002-00
12	Coil, 24-940 [NO DIODE]	1	090-5036-ND
	COIL DOES NOT REQUIRE A DIODE. SEE ↻ COIL NOTE ABOVE FOR DETAILS.		
13	Coil Sleeve (Formost #10-7077)	1	545-5076-01
14	Bracket, Plunger Stop	1	535-9959-00
	Item 14 is secured to Item 1 by: #8-32 Nylon Stop Nut (Qty. 2) (240-5102-00)		

Ordering Note: *If **500-7029-04** is unavailable, order the individual part(s) actually required (for cable wiring, use Part Number 036-5523-16-93).*

Nr.	ASSOCIATED PART(S)	QTY.	SPI PART Nr.
AP-A	***Kit:* Decals** *(incl. -22– -25 Drop Trgt.)*	1	802-5000-93

Note: *Individual Decals (820-6394-XX) are not available individually, ordering of kit is required.*

Take Note:

↻ **Coil Note:** ↻ **NO DIODE ON LUGS**. *If replacing with a coil of the same gauge and turn and it has a diode on it, remove it before using.*

TARGET/PCB Side Asm'd View

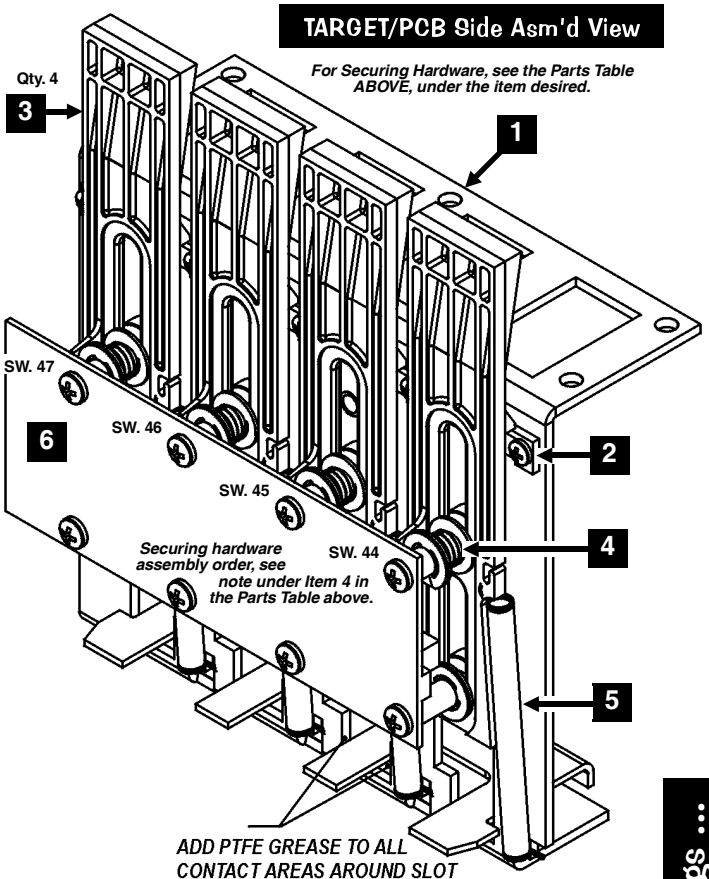

Coil Side Assembled View

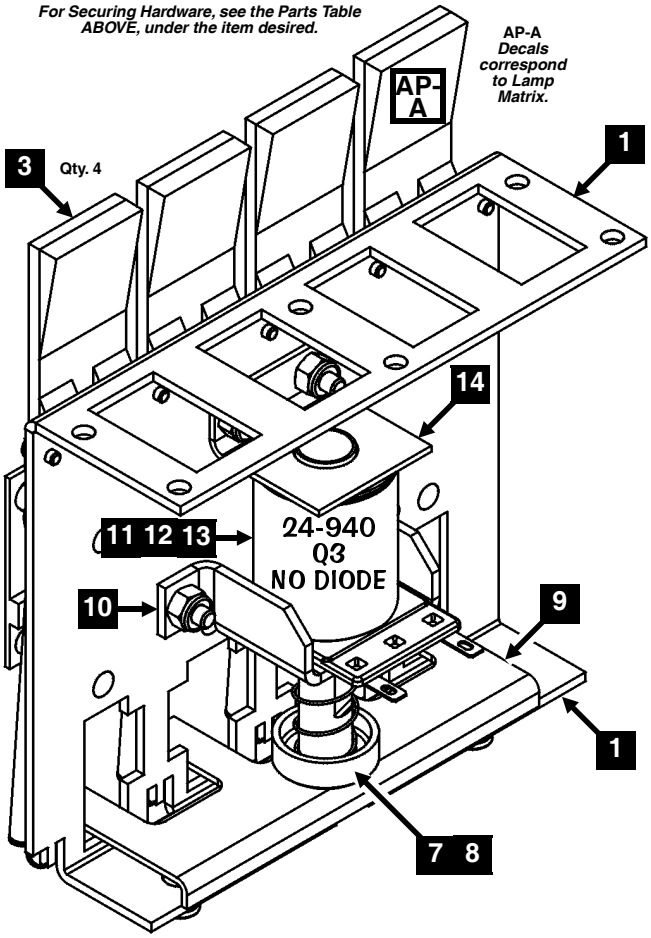

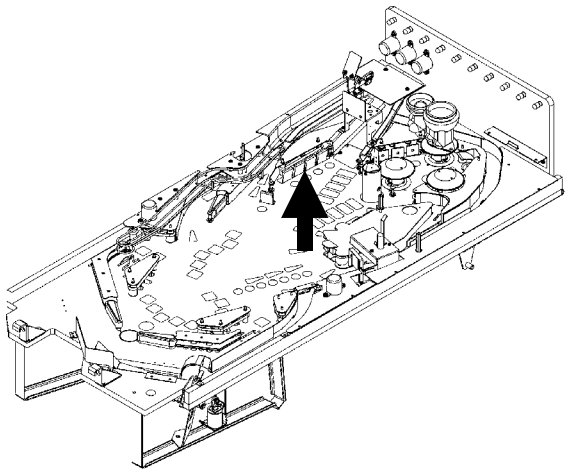

1- or 4-Bank Drop Target (500-7029-01 or 500-7029-04)
Coil Side Disassembly Procedure (4-Bank Drop Target Shown)

Technicians Remember the Basics: *All Service should be done by qualified personnel.* ***ALWAYS REMOVE POWER BEFORE SERVICING****. Service assemblies which are below the playfield, with the playfield in its' most upright position (leaning against the Backbox). Raise it carefully! Ensure the bottom edge (back) of the playfield is still resting on the Cabinet Side Support Rails and is forward enough to allow the Playfield to lean against the backbox at an angle so it does not fall forward.* ***When lowering, rest on the support brackets first, then continue to place in cabinet.*** *Re-assembly is the reverse of disassembly (removal). Keep track of securing hardware (which are referenced under the items in the Parts Table) Use* ***Loctite Blue 243*** *on the threads of all screws to ensure the screws will not loosen in play. When in doubt, give us a call!*

COIL AND/OR PLUNGER-LIFT BRACKET REMOVAL:

Note: *Assembly need not be removed from the playfield to perform this procedure.*

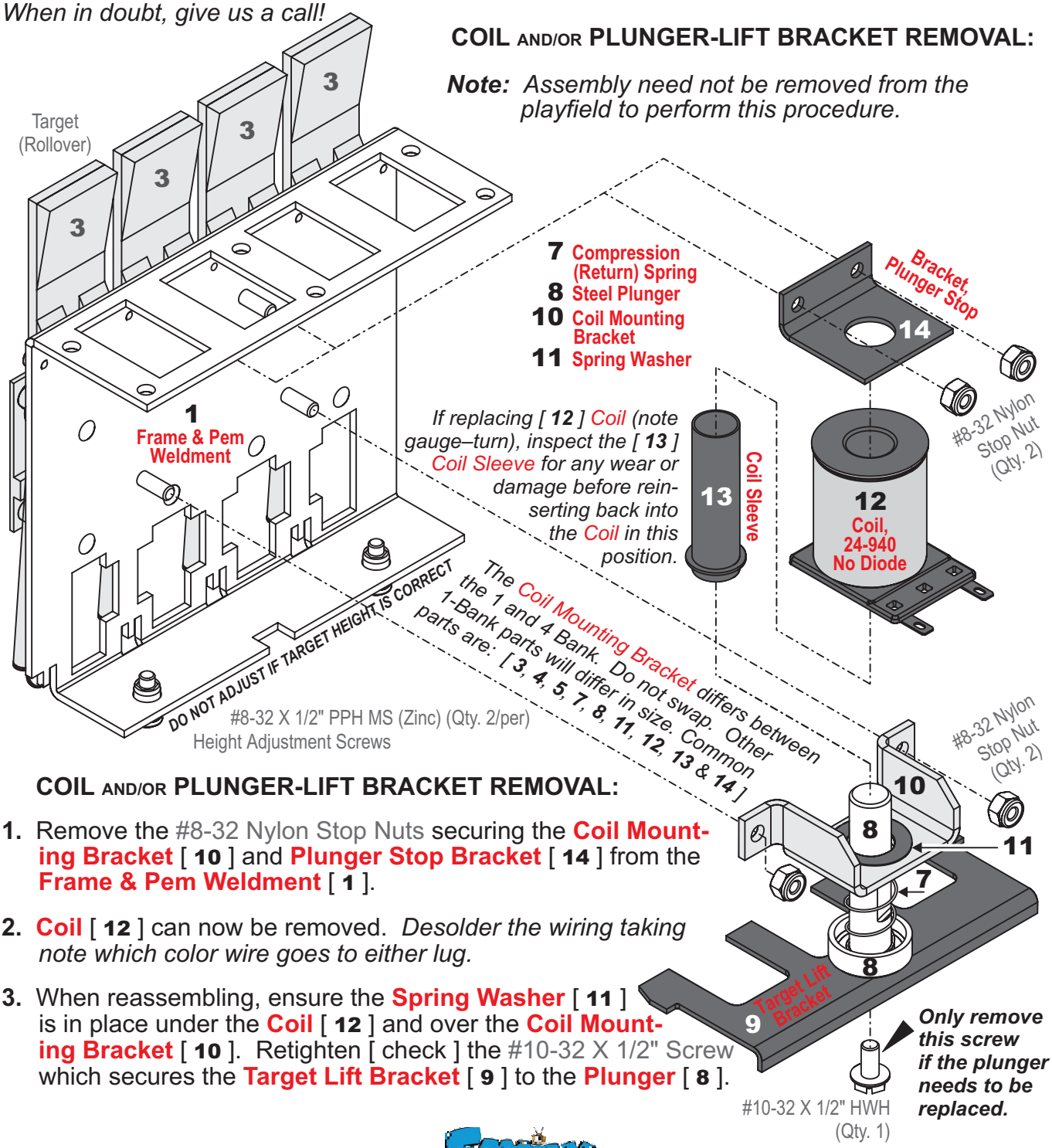

COIL AND/OR PLUNGER-LIFT BRACKET REMOVAL:

1. Remove the #8-32 Nylon Stop Nuts securing the **Coil Mounting Bracket** [**10**] and **Plunger Stop Bracket** [**14**] from the **Frame & Pem Weldment** [**1**].
2. **Coil** [**12**] can now be removed. *Desolder the wiring taking note which color wire goes to either lug.*
3. When reassembling, ensure the **Spring Washer** [**11**] is in place under the **Coil** [**12**] and over the **Coil Mounting Bracket** [**10**]. Retighten [check] the #10-32 X 1/2" Screw which secures the **Target Lift Bracket** [**9**] to the **Plunger** [**8**].

1- or 4-Bank Drop Target (500-6946-01 or 500-7029-04)
Target & PCB Side Disassembly Procedure (4-Bank Drop Target Shown)

Technicians Remember the Basics: *All Service should be done by qualified personnel.* ***ALWAYS REMOVE POWER BEFORE SERVICING****. Service assemblies which are below the playfield, with the playfield in its' most upright position (leaning against the Backbox). Raise it carefully! Ensure the bottom edge (back) of the playfield is still resting on the Cabinet Side Support Rails and is forward enough to allow the Playfield to lean against the backbox at an angle so it does not fall forward.* ***When lowering, rest on the support brackets first, then continue to place in cabinet.*** *Re-assembly is the reverse of disassembly (removal). Keep track of securing hardware (which are referenced under the items in the Parts Table) Use* ***Loctite Blue 243*** *on the threads of all screws to ensure the screws will not loosen in play.*

When in doubt, give us a call!

TARGET AND SPRING REMOVAL:

Note: *Assembly need not be removed from the playfield to perform this procedure.*

1. Remove the #6-32 x 3/8" PPH MS Screws securing the **PCB, Slotted OPTO** [**6**] from the **Frame & Pem Weldment** [**1**].
2. Remove the top [**T**] Retaining Ring, 1/4" ø and Washer and set aside the **Compression *(Short)* Spring** [**4**] and second Washer. Remove the bottom [B] Retaining Ring & Washer. Unhook the **Reset Spring** [**5**].

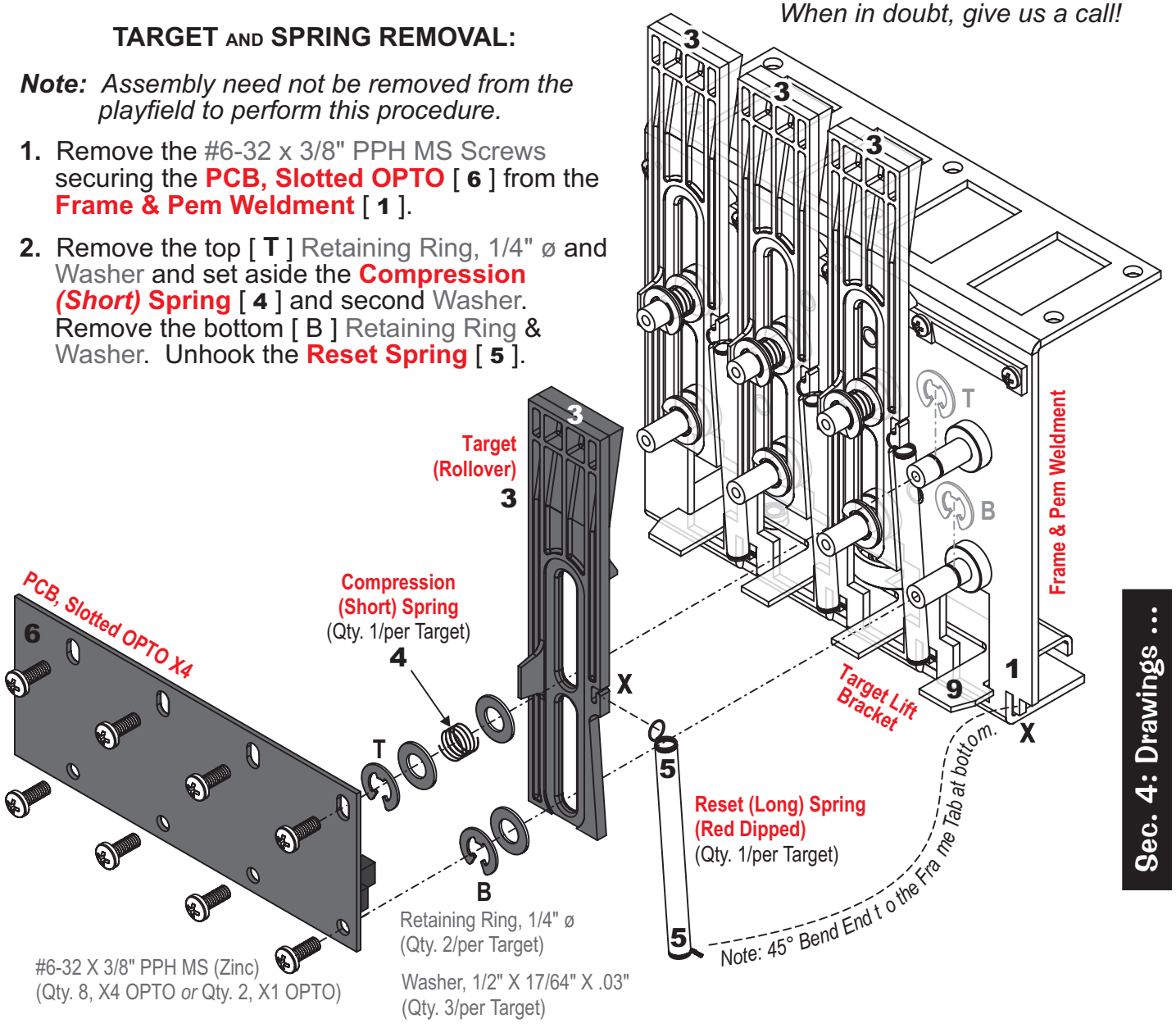

3. The **Target** [**3**] can now be removed. When reassembling, note the other targets. The **Compression Spring** [**4**] is at the top between the two Washers, secure with the top [**T**] Retaining Ring. When replacing the **Reset *(Long)* Spring** [**5**], hook one end to the **Target** tab [**X**] and the other **45° end** to the tab [**X**] on the **Frame & Pem Weldment** [**1**].

Plastic Left Ramp Assembly, Individual Parts Only (Items 1-12)

[Different Views on the next page.]

Take Note:

® "R" indicates Item noted is secured with rivet(s) as listed.

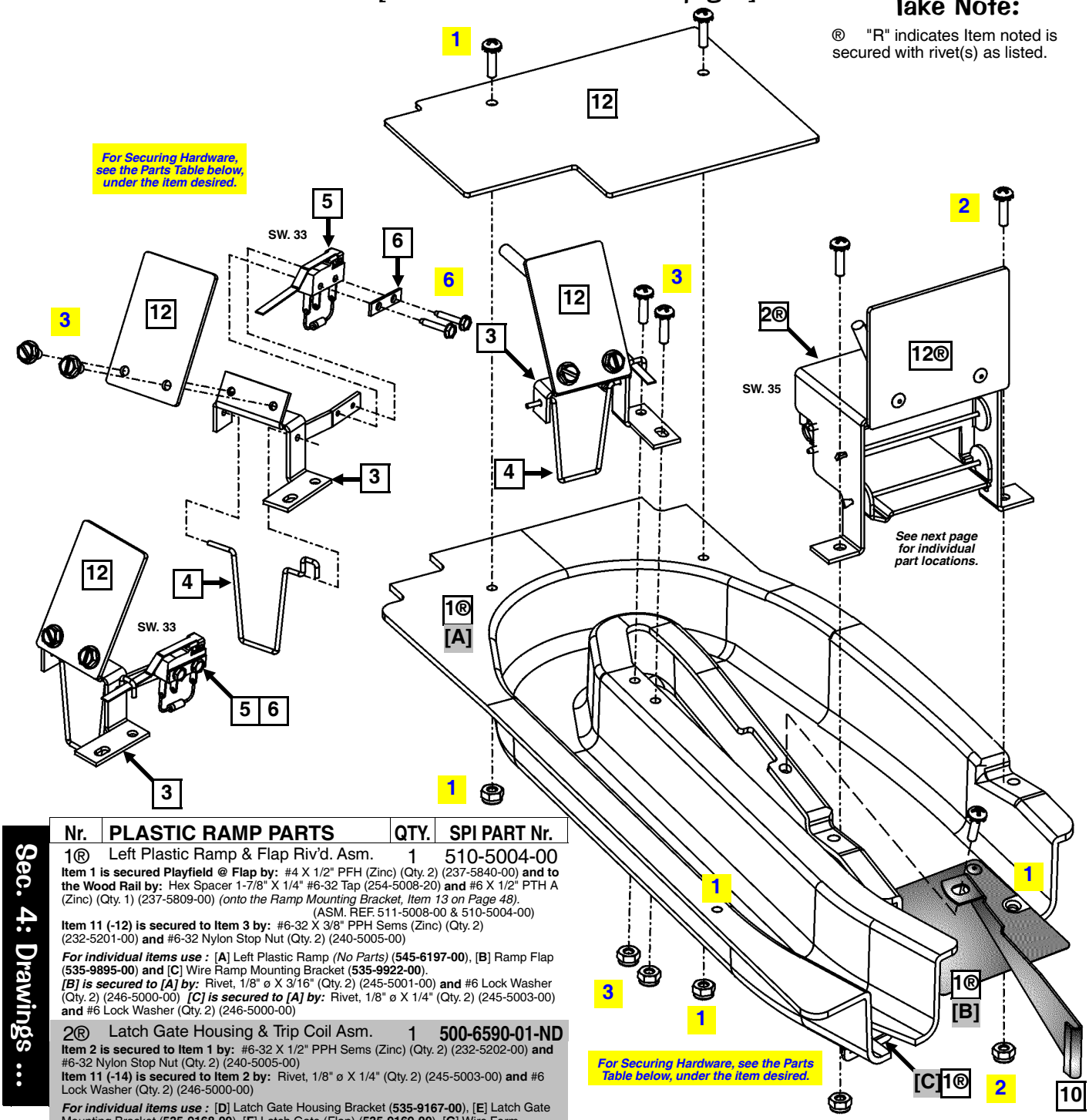

Sec. 4: Drawings ...

Nr.	PLASTIC RAMP PARTS	QTY.	SPI PART Nr.
1®	Left Plastic Ramp & Flap Riv'd. Asm.	1	510-5004-00

Item 1 is secured Playfield @ Flap by: #4 X 1/2" PFH (Zinc) (Qty. 2) (237-5840-00) **and to the Wood Rail by:** Hex Spacer 1-7/8" X 1/4" #6-32 Tap (254-5008-20) **and** #6 X 1/2" PTH A (Zinc) (Qty. 1) (237-5809-00) *(onto the Ramp Mounting Bracket, Item 13 on Page 48).*
(ASM. REF. 511-5008-00 & 510-5004-00)

Item 11 (-12) is secured to Item 3 by: #6-32 X 3/8" PPH Sems (Zinc) (Qty. 2) (232-5201-00) **and** #6-32 Nylon Stop Nut (Qty. 2) (240-5005-00)

For individual items use : [**A**] Left Plastic Ramp *(No Parts)* (**545-6197-00**), [**B**] Ramp Flap (**535-9895-00**) **and** [**C**] Wire Ramp Mounting Bracket (**535-9922-00**).
[B] is secured to [A] by: Rivet, 1/8" ø X 3/16" (Qty. 2) (245-5001-00) **and** #6 Lock Washer (Qty. 2) (246-5000-00) ***[C] is secured to [A] by:*** Rivet, 1/8" ø X 1/4" (Qty. 2) (245-5003-00) **and** #6 Lock Washer (Qty. 2) (246-5000-00)

2®	Latch Gate Housing & Trip Coil Asm.	1	**500-6590-01-ND**

Item 2 is secured to Item 1 by: #6-32 X 1/2" PPH Sems (Zinc) (Qty. 2) (232-5202-00) **and** #6-32 Nylon Stop Nut (Qty. 2) (240-5005-00)
Item 11 (-14) is secured to Item 2 by: Rivet, 1/8" ø X 1/4" (Qty. 2) (245-5003-00) **and** #6 Lock Washer (Qty. 2) (246-5000-00)

For individual items use : [**D**] Latch Gate Housing Bracket (**535-9167-00**), [**E**] Latch Gate Mounting Bracket (**535-9168-00**), [**F**] Latch Gate (Flap) (**535-9169-00**), [**G**] Wire Form (Hinge) (Qty. 2) (**535-9170-00**), [**H**] Trip Coil (32-1250) Assembly (**515-6916-01-ND**), [**I**] Switch (Roller Actuator) (**180-5119-02**), [**J**] Switch Body Protect Plate (**535-6539-00**), [**K**] Diode (1N4004) (**112-5003-00**) and [**L**] Mylar Insulator (**820-6315-21**).
[H] is secured to [D] by: #8-32 Nylon Stop Nut (240-5102-00) **and** #8 Washer (242-5005-00). ***[J] is secured to [I] by:*** #2-56 X 1/2" Uns. Ser. HWH #4HD TR3 Black Oxide (Qty. 2) (237-5937-02) (ASM. REF. 500-6590-01-93)

3	Exit Gate Mounting Bracket	1	535-6303-03

Item 3 is secured to Item 1 by: #6-32 X 1/2" PPH Sems (Zinc) (Qty. 2) (232-5202-00) **and** #6-32 Nylon Stop Nut (Qty. 2) (240-5005-00) (ASM. REF. 515-6490-09)
Item 11 (-15) is secured to Item 3 by: #6-32 X 1/4" SHWH Sw. (Zc.) (Qty. 2) (237-5976-01)

4	Exit Gate Wire Form	1	535-6304-03
5	Switch, Exit Gate	1	180-5087-00

Switch has a Diode (1N4004) (112-5003-00). *Can be replaced with (1N4001) (112-5001-00).*

6	Switch Body Protect Plate	1	535-6539-00

Items 5 & 6 are secured to Item 3 by: #2-56 X 1/2" Uns. Ser. HWH #4HD TR3 Black Oxide (Qty. 2) (237-5937-02)

Nr.	PLASTIC RAMP PARTS	QTY.	SPI PART Nr.
7	Wedge Base Socket (Laydown)	1	077-5026-01

Item 7 is secured to Items 1 & 11 *(left hole)* by: Rivet, 1/8" ø X 1/4" (Qty. 1) (245-5003-00) **and** #6 Lock Washer (Qty. 1) (246-5000-00) (ASM. REF. 511-5053-03)

8	#555 Wedge Base Bulb (Clear)	1	165-5002-00
9	Light Reflector (Silver Plastic)	1	545-5409-01
10	Ramp Guard, Left Side	1	535-9981-00

Item 10 is secured to Item 1 by: #6-32 X 3/8" PPH Sems (Zinc) (Qty. 1) (232-5201-00)

11	***Kit:* Decal** *(incl. -27 Evil Monkey)*	1	802-5000-93

Note: *Individual Decals (820-6394-XX) are not available individually, ordering of kit is required.*

12®	***Kit:* Plastics** *(incl. -12, -14 & -15)*	1	803-5000-93

Note: *Individual Plastics (830-6054-XX & 830-6062-XX) are not available individually, ordering of kit is required.*

Plastic Left Ramp Assembly, Individual Parts Only (Items 1-12) Continued

[Different Views & Parts Table on the previous page.]

Take Note:

® "R" indicates Item noted is secured with rivet(s) as listed.

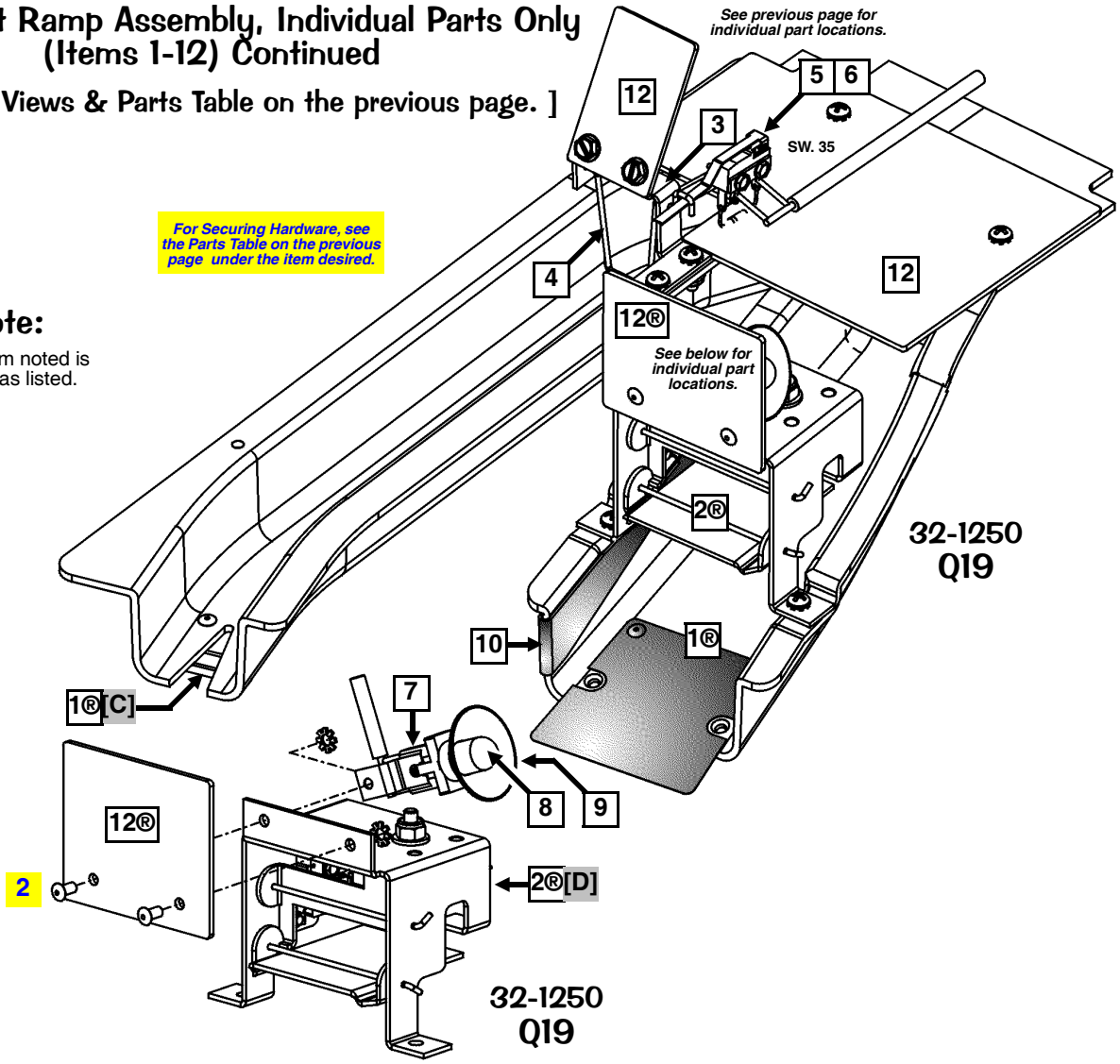

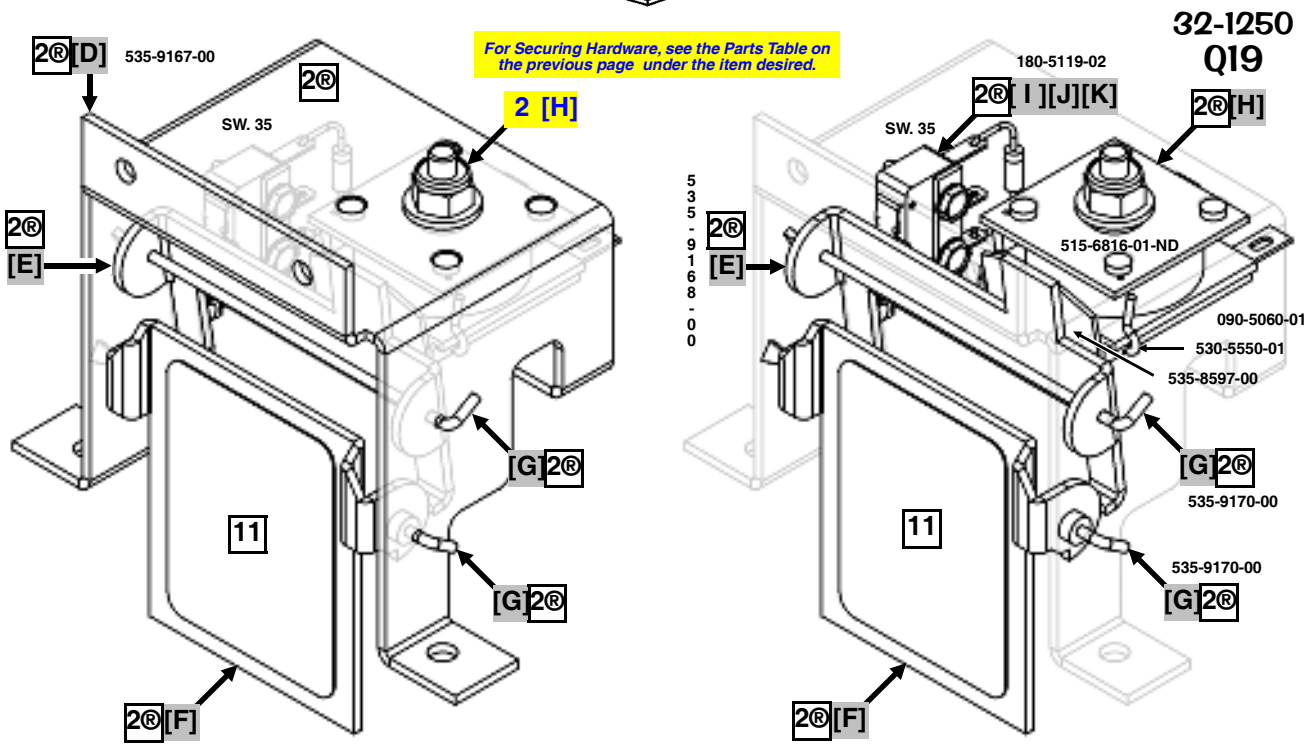

Sec. 4: Drawings ...

Flat Rail #21 (Riveted) Assembly, 515-7607-21 (Item FR21, Page 52)

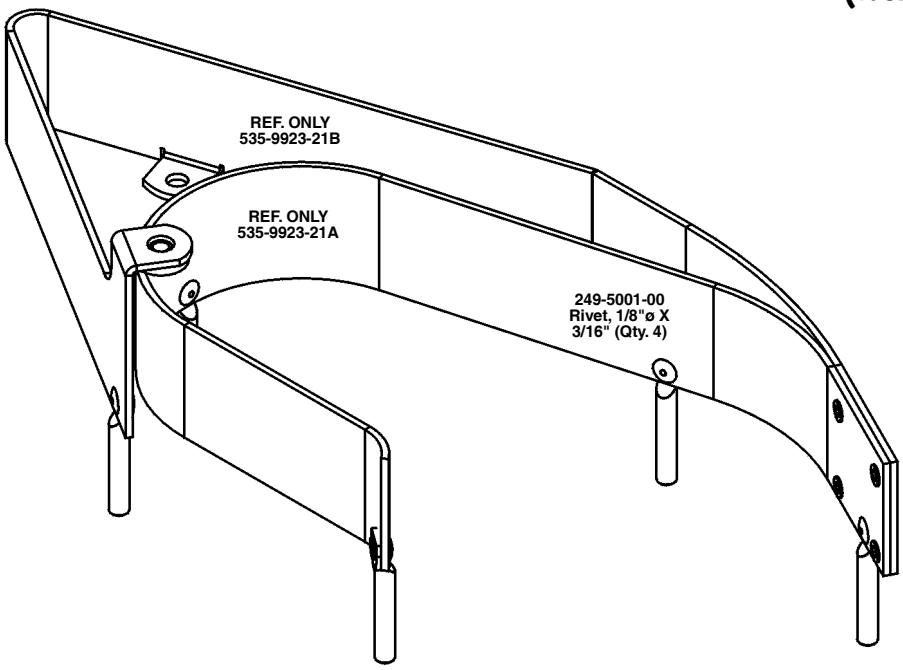

Red Wire Ramp, 535-9920-00 (Item WR1, Page 52)

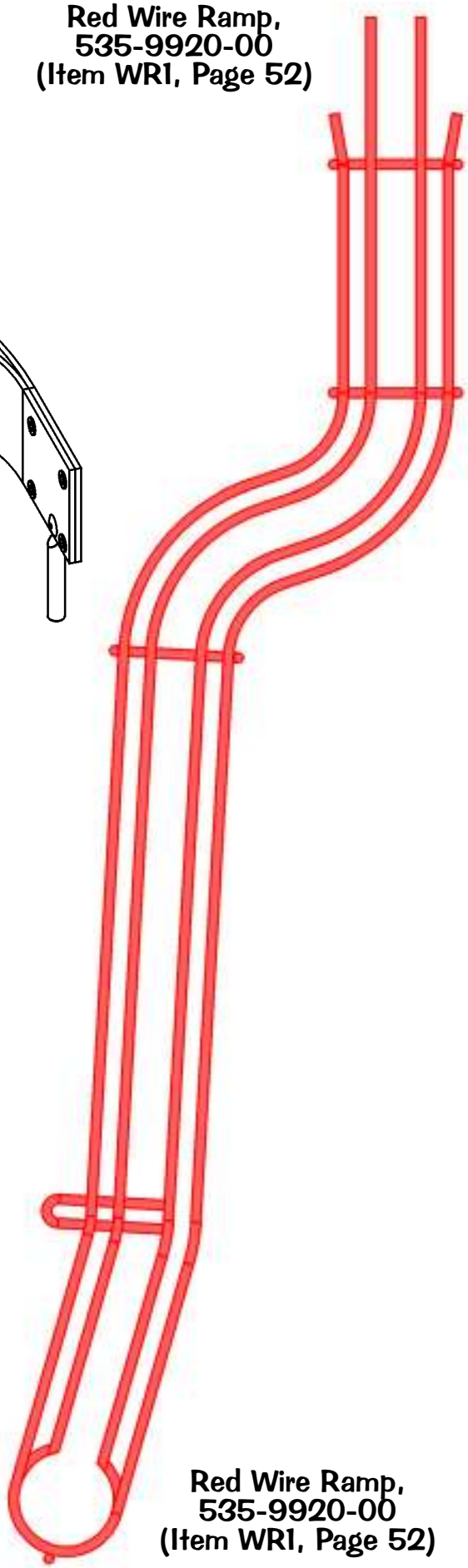

Flat Ramp & Flap (Riveted) Assembly, Individual Parts Only (Item FR23, Page 52)

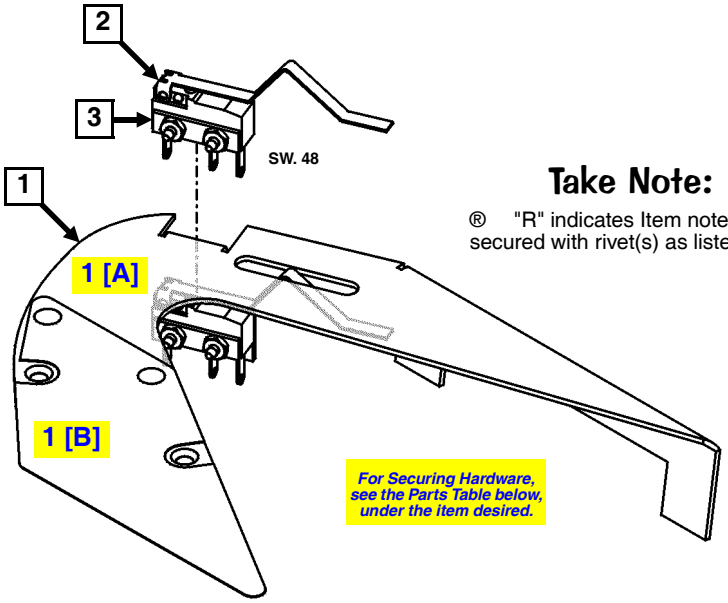

Take Note:

® "R" indicates Item noted is secured with rivet(s) as listed.

Nr.	METAL RAMP PARTS	QTY.	SPI PART Nr.
1®	Metal Ramp & Flap Riveted Assembly	1	510-5006-00
	Item 1 is secured Playfield @ Flap by: #4 X 5/8" PFH (Black) (Qty. 2) (237-5833-00) (ASM. REF. 511-5002-00)		
	For individual items use : [**A**] Metal Ramp *(No Parts)* (**535-9900-00**) **and** [**B**] Ramp Flap (**535-9901-00**). ***[B] is secured to [A] by:*** Rivet, 1/8" ø X 3/16" (Qty. 2) (245-5001-00) **and** #6 Lock Washer (Qty. 2) (246-5000-00)		
2	Switch (Happ #95-1128-00)	1	180-5183-00
	Switch has a Diode (1N4004) (112-5003-00). *Can be replaced with (1N4001) (112-5001-00).*		
3	Switch Body Protect Plate	1	535-6539-00
	Items 2 & 3 are secured to Item 1 by: #2-56 X 1/2" Uns. Ser. HWH #4HD TR3 Black Oxide (Qty. 2) (237-5937-02) **and** #-2-56 Hex Nut (Qty. 2) (240-5301-00).		

Red Wire Ramp, 535-9920-00 (Item WR1, Page 52)

Meg Popper Assembly, Individual Parts Only (Items 1-10)

Meg Figurine (Modified) 880-5084-01-01

Take Note:

® "R" indicates Item noted is secured with rivet(s) as listed.

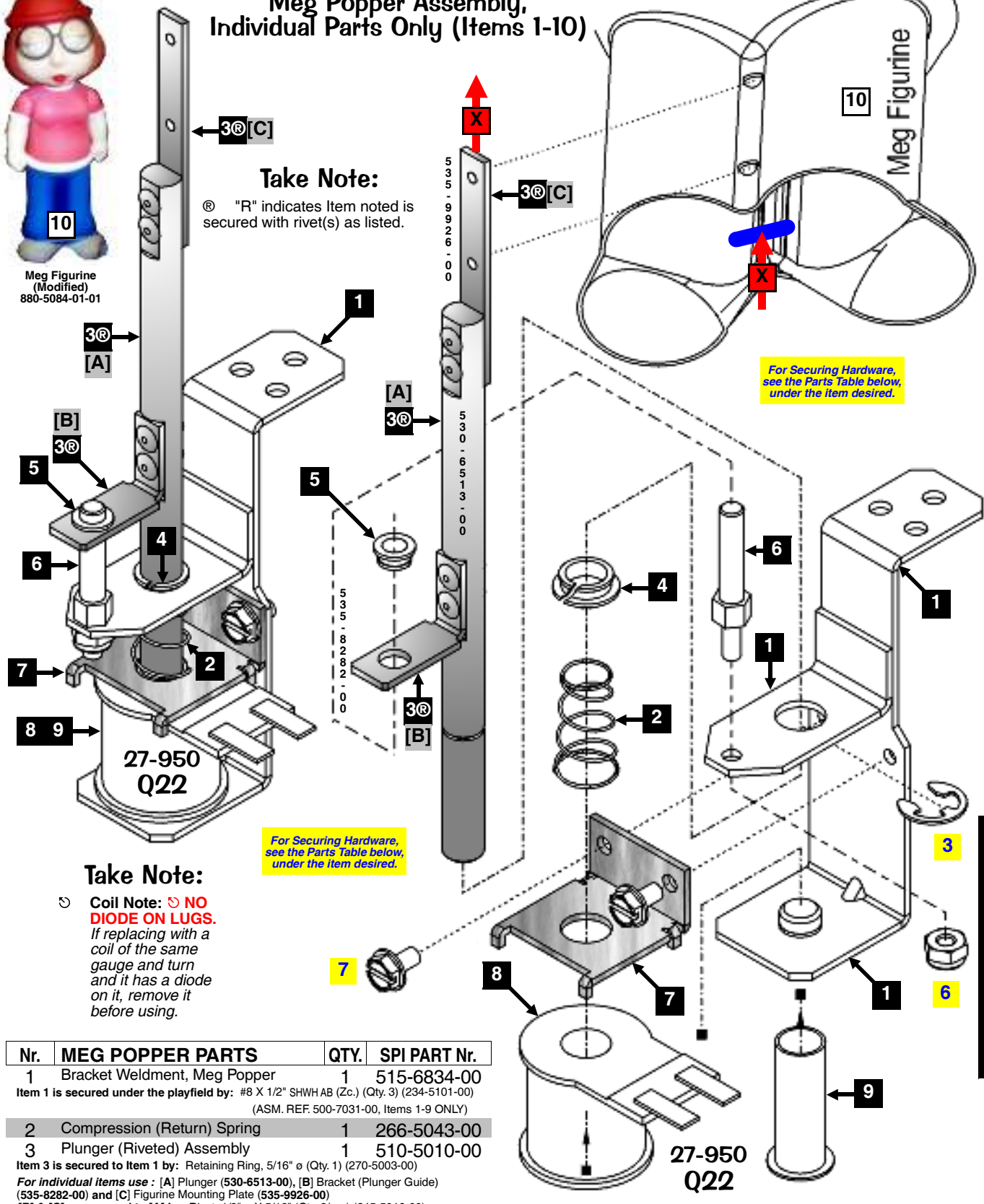

Take Note:

↻ **Coil Note: ↻ NO DIODE ON LUGS.** *If replacing with a coil of the same gauge and turn and it has a diode on it, remove it before using.*

Nr.	MEG POPPER PARTS	QTY.	SPI PART Nr.
1	Bracket Weldment, Meg Popper	1	515-6834-00
	Item 1 is secured under the playfield by: #8 X 1/2" SHWH AB (Zc.) (Qty. 3) (234-5101-00) (ASM. REF. 500-7031-00, Items 1-9 ONLY)		
2	Compression (Return) Spring	1	266-5043-00
3	Plunger (Riveted) Assembly	1	510-5010-00
	Item 3 is secured to Item 1 by: Retaining Ring, 5/16" ø (Qty. 1) (270-5003-00)		
	For individual items use : [**A**] Plunger (**530-6513-00**), [**B**] Bracket (Plunger Guide) (**535-8282-00**) and [**C**] Figurine Mounting Plate (**535-9926-00**)		
	[B] & [C] are secured to [A] by: Rivet, 1/8" ø X 5/16" (Qty. 2/per) (245-5016-00)		
4	Nyliner 5/16"ø (5L1-FF Thomson)	1	545-5485-00
5	Nyliner 3/16"ø (3L1-FF Thomson)	1	545-5352-00
6	Should Pin	1	530-5808-00
	Item 6 is secured to Item 1 by: #6-32 Nylon Stop Nut (Qty. 1) (240-5005-00)		
7	Mini-Coil Retainer Bracket	1	535-9925-00
	Item 7 is secured to Item 1 by: #6-32 X 1/4" SHWH Ser. Swage (Zlnc) Wax (Qty. 2) (237-5976-01)		

Nr.	MEG POPPER PARTS	QTY.	SPI PART Nr.
8	Mini-Coil, 27-950 [NO DIODE]	1	**090-5046-01-ND**
	COIL DOES NOT REQUIRE A DIODE. SEE ↻ COIL NOTE ABOVE FOR DETAILS.		
9	Mini-Coil Sleeve	1	545-5442-00
10	Meg Figurine (Modified)	1	**880-5084-01-01**
	Item 10 is secured to Item 3[C] by: #4-40 X 3/8" PPH TT (Qty. 2) (237-5979-00) **and** #4 Washer 5/16" O.D. (Qty. 2) (242-5002-00)		

Beer Can (Brian*) Assembly, Individual Parts Only (Items 1-13)

Brian Figurine
(Modified)
880-5084-00-01

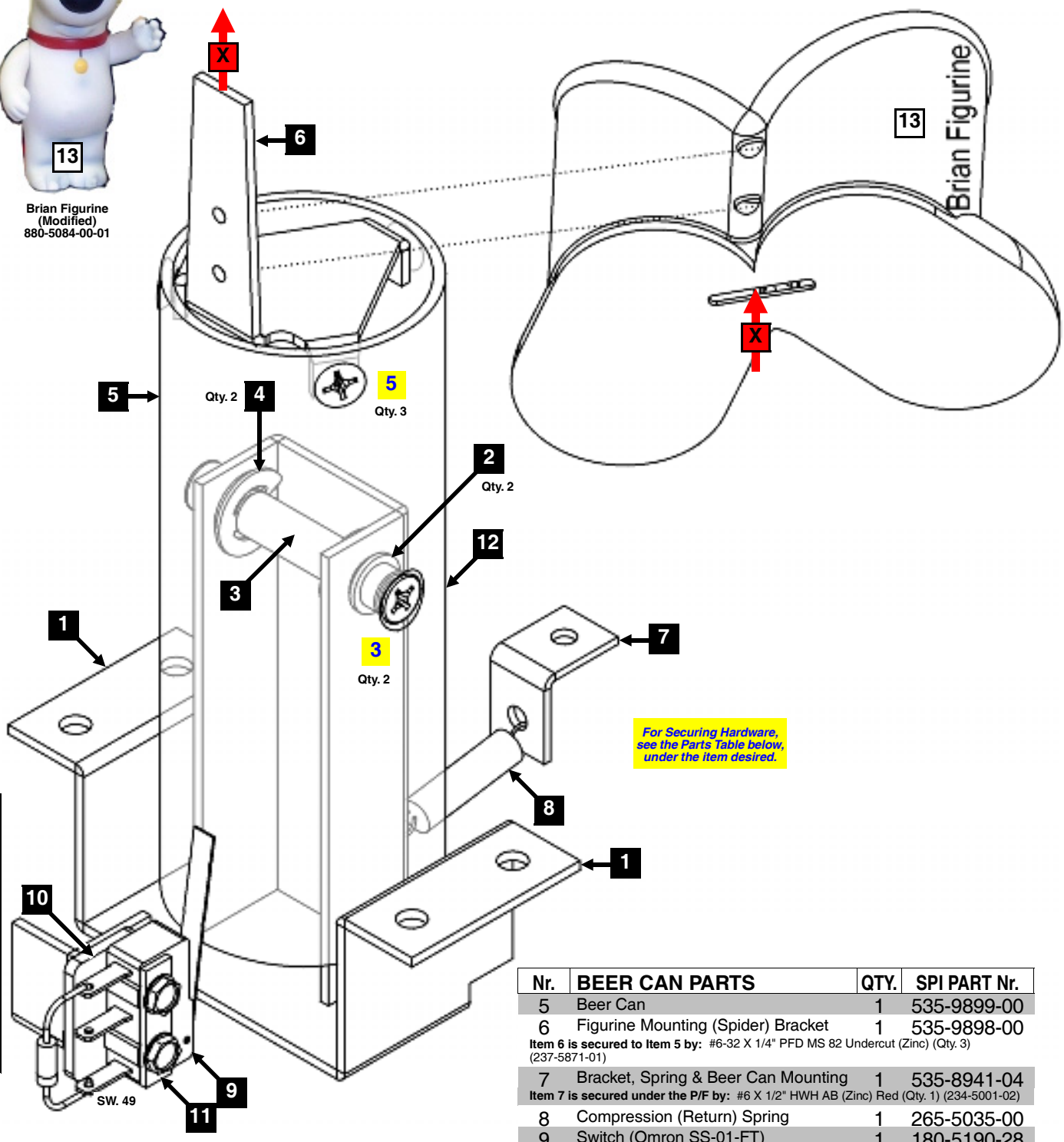

For Securing Hardware, see the Parts Table below, under the item desired.

Nr.	BEER CAN PARTS	QTY.	SPI PART Nr.
1	Bracket Weldment, Beer Can Mount.	1	535-9896-00
	Item 1 is secured under the playfield by: #8 X 1/2" SHWH AB (Zc.) (Qty. 4) (234-5101-00) (ASM. REF. 500-7025-00, Items 1-12 ONLY)		
2	Nyliner 1/4"ø (4L1-FF Thomson)	1	545-5423-00
3	Shaft (Beer Can Pivot)	1	530-5745-00
	Item 3 is secured to Item 5 by: #8-32 X 5/16" PFH 82° U/C MS Undercut (Zinc) (Qty. 2) (237-6030-01)		
4	Retaing Ring, 1/4" ø	2	270-5002-00

Nr.	BEER CAN PARTS	QTY.	SPI PART Nr.
5	Beer Can	1	535-9899-00
6	Figurine Mounting (Spider) Bracket	1	535-9898-00
	Item 6 is secured to Item 5 by: #6-32 X 1/4" PFD MS 82 Undercut (Zinc) (Qty. 3) (237-5871-01)		
7	Bracket, Spring & Beer Can Mounting	1	535-8941-04
	Item 7 is secured under the P/F by: #6 X 1/2" HWH AB (Zinc) Red (Qty. 1) (234-5001-02)		
8	Compression (Return) Spring	1	265-5035-00
9	Switch (Omron SS-01-FT)	1	180-5190-28
	Switch has a Diode (1N4004) (112-5003-00). *Can be replaced with (1N4001) (112-5001-00).*		
10	***Kit:* Plastic** *(incl. -SP)*	1	803-5000-93
	Note: *See "Kit Note Required" under Item 12.*		
11	Switch Body Protect Plate	1	535-6539-00
	Items 9–11 are secured to Item 1 by: #2-56 X 1/2" Uns. Ser. HWH #4HD TR3 Black Oxide (Qty. 2) (237-5937-02)		
12	***Kit:* Decal** *(incl. -11 or -12 Beers)*	1	802-5000-93
	Note: *Individual Plastics (830-6054-XX & 830-6062-XX) and Decals (820-6394-XX) are not available individually, ordering of kit is required.*		
13	Brian Figurine (Modified)	1	**880-5084-00-01**
	Item 13 is secured to Item 6 by: #4-40 X 3/8" PPH TT (Qty. 2) (237-5979-00) **and** #4 Washer 5/16" O.D. (Qty. 2) (242-5002-00)		

Stewie & Motor Assembly, Individual Parts Only (Items 1-7)

Stewie Figurine (Modified) 880-5084-03-01

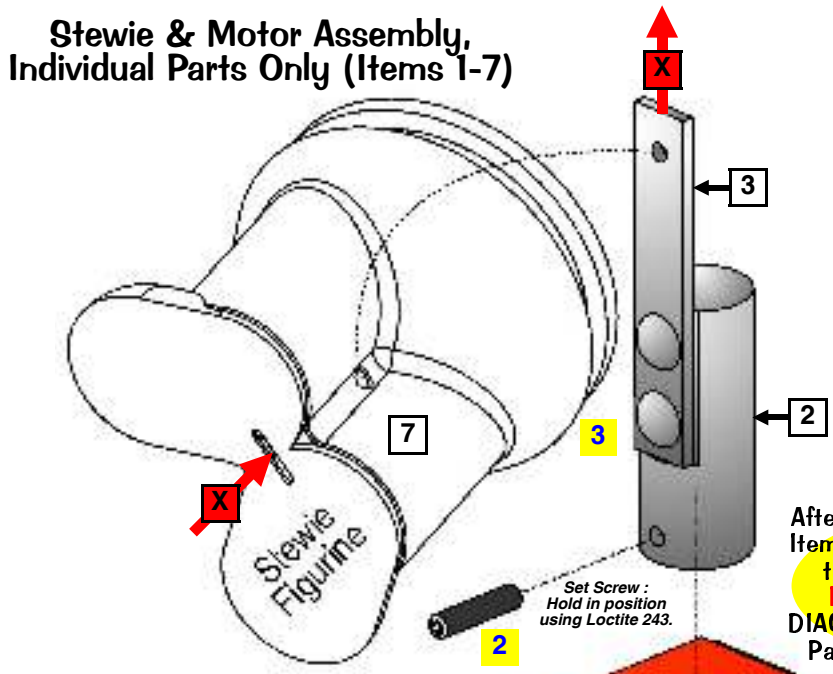

After securing Item 2, Stewie Platform, to Item 4, Adaptor, correctly (set screw onto the "flat" of the Adaptor) YOU MUST PERFORM the Stewie Motor Test in DIAGNOSTICS. See Section 3, Chapter 2, Page 17, Stewie Motor Test, for details.

For Securing Hardware, see the Parts Table below, under the item desired.

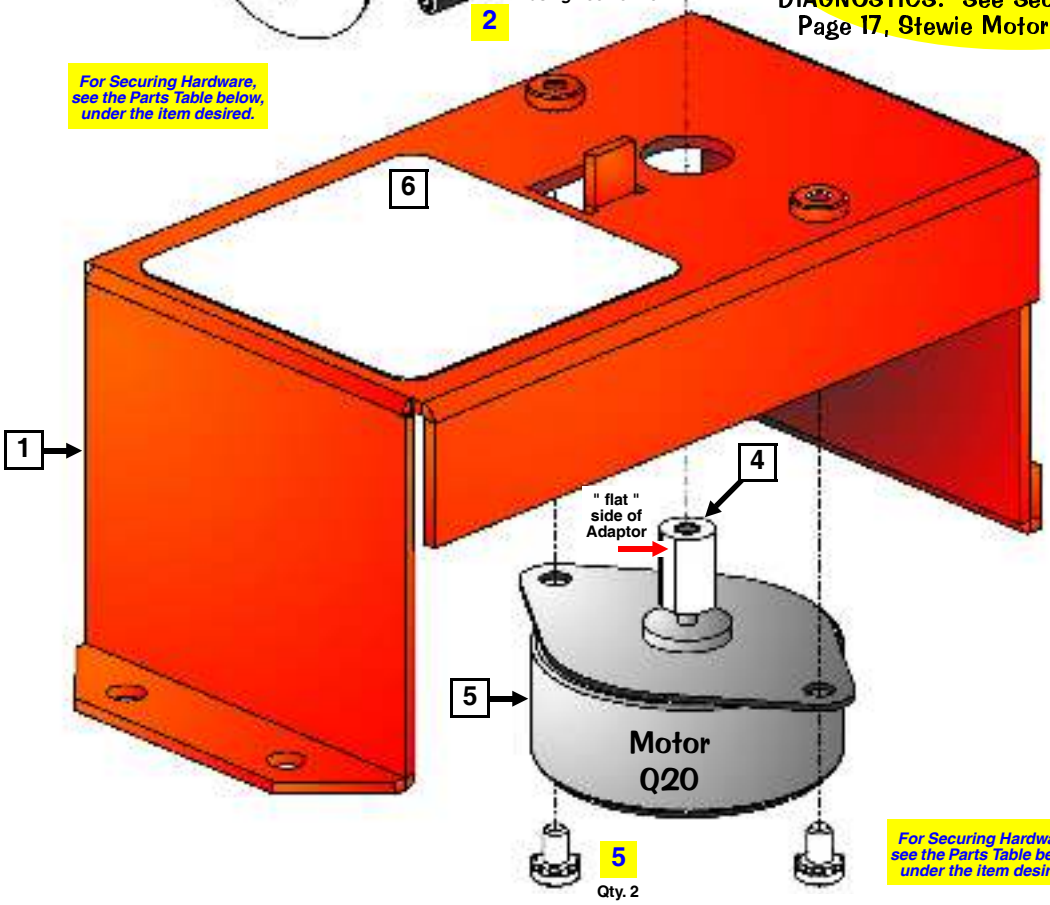

For Securing Hardware, see the Parts Table below, under the item desired.

Nr.	STEWIE & MOTOR PARTS	QTY.	SPI PART Nr.
1	Stewie Platform & Motor Mount	1	515-7605-00
	Item 1 is secured above the playfield by: #8 X 1/2" SHWH AB (Zc.) (Qty. 4) (234-5101-00) (ASM. REF. 500-7030-00, Items 1-6 ONLY)		
2	Stewie Platform	1	530-5747-00
	Item 2 is secured over Item 4 by: #4-40 X 1/2" Long Cup-Point Set Screw (237-6183-00)		
	Note : *Use Loctie 243 (000-0632-00) before reinserting.*		
3	Figurine Mounting Plate	1	535-9914-00
	Item 3 is secured to Item 2 by: #6 X 1/4" SS U Drive Screw (Qty. 2) (530-5761-00) (ASM. REF. 510-5007-00, Items 2-3 ONLY)		
4	Adaptor (for Motor Shaft)	1	530-5748-00
	Note : *Press Item 4 Adaptor onto the Motor Shaft. Ensure that it's flush with top.*		

Nr.	STEWIE & MOTOR PARTS	QTY.	SPI PART Nr.
5	Stepper Motor & Connector	1	511-5043-00
	For Individual Items use : Stepper Motor NPM PF35T-48D4STD 5V RVB (**041-5102-00**), 6-Pin Connector (**045-5157-06**) **and** 4" Cable Tie (**040-5001-01**). (ASM. REF. 511-5007-00, Items 4-5 ONLY)		
	Item 5 is secured to Item 1 by: #4-40 X 3/16" PPH MS Sems (Zinc) (Qty. 2) (237-5884-00)		
	Item 5 *works with the* ***Stepper Motor Controller PCB Asm. (511-5045-00)****. For more information and wiring colors, schematics and parts of this PCB, see Section* ***5****, Chapter* ***4****,* ***Printed Circuit Boards (PCBs)****, Page* ***144****.*		
6	***Kit:*** **Decal** *(incl. -28 Stewie Platform)*	1	802-5000-93
	Note: *Individual Decals (820-6394-XX) are not available individually, ordering of kit is required.*		
7	Stewie Figurine (Modified)	1	**880-5084-03-01**
	Item 7 is secured to Item 3 by: #4-40 X 3/8" PTH Black (Qty. 1) (237-6154-01)		

Peter & Mounting Assembly, Individual Parts Only (Items 1, 4–6)

Chris & Mounting Assembly, Individual Parts Only (Items 2 & 5)

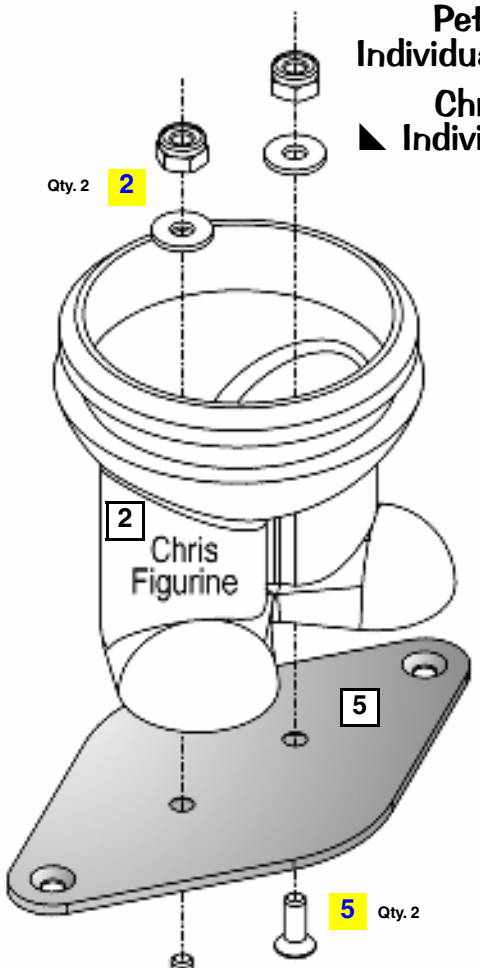

PETER, CHRIS & LOIS PARTS		
Nr.	QTY.	SPI PART Nr.
1	Peter Figurine *(Modified)* 1	**880-5084-05-01**
	Item 1 is secured to Item 5 with Item 4 by: #6-32 X 3/8" PFH (Zinc) (Qty. 2) (237-5850-00) (ASM. REF. Peter 511-5005-00, Items 1, 4–6)	
2	Chris Figurine *(Modified)* 1	**880-5084-04-01**
	Item 2 is secured to Item 5 by: #6-32 X 3/8" PFH (Zinc) (Qty. 2) (237-5850-00), #6-32 Nylon Stop Nut (Qty. 2) (240-5005-00) **and** #6 Washer (Qty. 2) (242-5001-00) (ASM. REF. Chris 511-5006-00, Items 2 & 5)	
3	Lois Fig. *(Modified)* + Bracket 1	**511-5050-00**
	Item 3 is secured above the Playfield by: #6 X 1/2" HWH AB (Zc.) Red (Qty. 2) (234-5001-02)	
	Item 3 bracket hardware included: #4-40 X 1/4" PPH MS (Zinc) (Qty. 2) (237-6169-00) **and** #4 Washer 5/16" O.D. (Qty. 2) (242-5002-00) (ASM. REF. Lois Fig. (Modified) 880-5084-02-01 + Mounting Bracket 535-9928-00)	
4	Tapped Plate *(Inside Mount)* 1	535-9908-00
5	Adaptor Plate *(Feet Mount)* 2	535-9909-00
	Item 5 is secured to Item 6 by: #6-32 X 3/8" PFH (Zinc) (Qty. 2) (237-5850-00) **Item 5 (under Chris) is secured to P/F Posts by:** #6-32 Keps Nut (Qty. 2) (240-5008-00)	
6	Adaptor Plate *(Bumper Mount)* 1	535-9977-00
	Item 6 is secured to Red Bumper Cap by: #4 X 1" STL (Zinc) T25 (Qty. 2) (237-6186-00)	

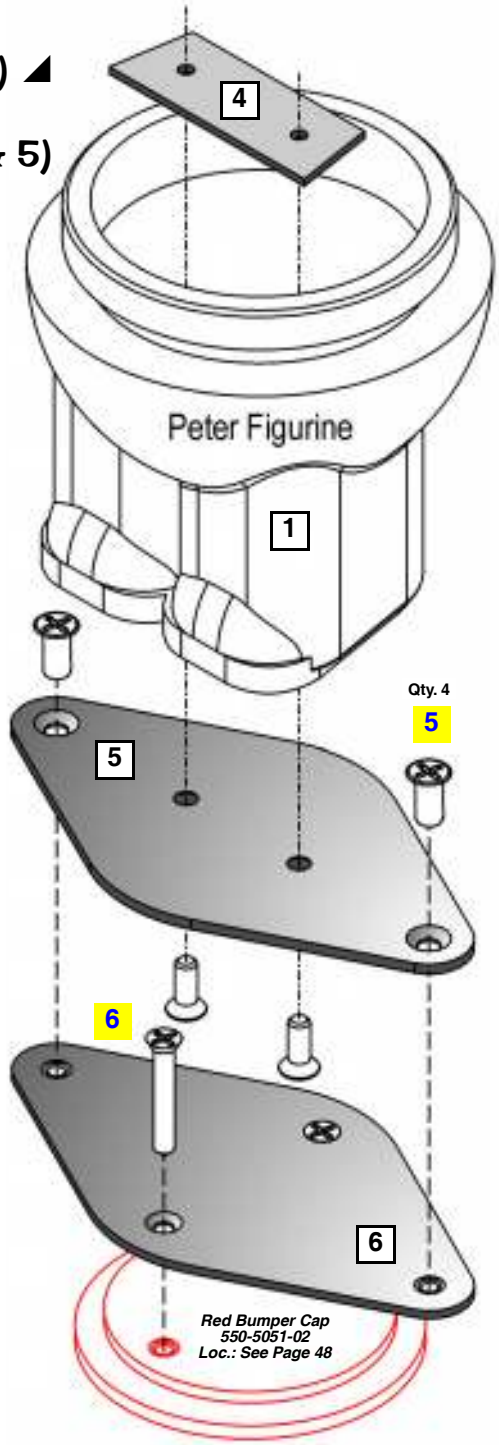

For Securing Hardware, see the Parts Table below, under the item desired.

Lois & Bracket Asm., 511-5050-00 (Item 3)

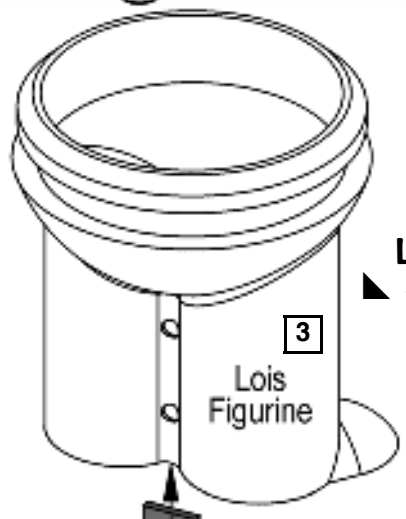

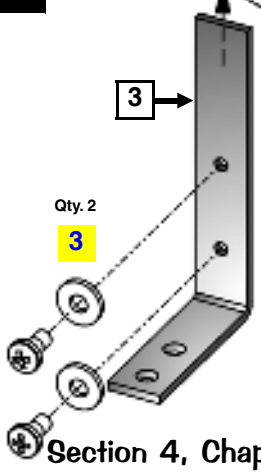

Lois Figurine (Modified) 880-5084-02-01

Peter Figurine (Modified) 880-5084-05-01

Chris Figurine (Modified) 880-5084-04-01

Back Panel Assembly, Individual Parts Only (Items 1-10)

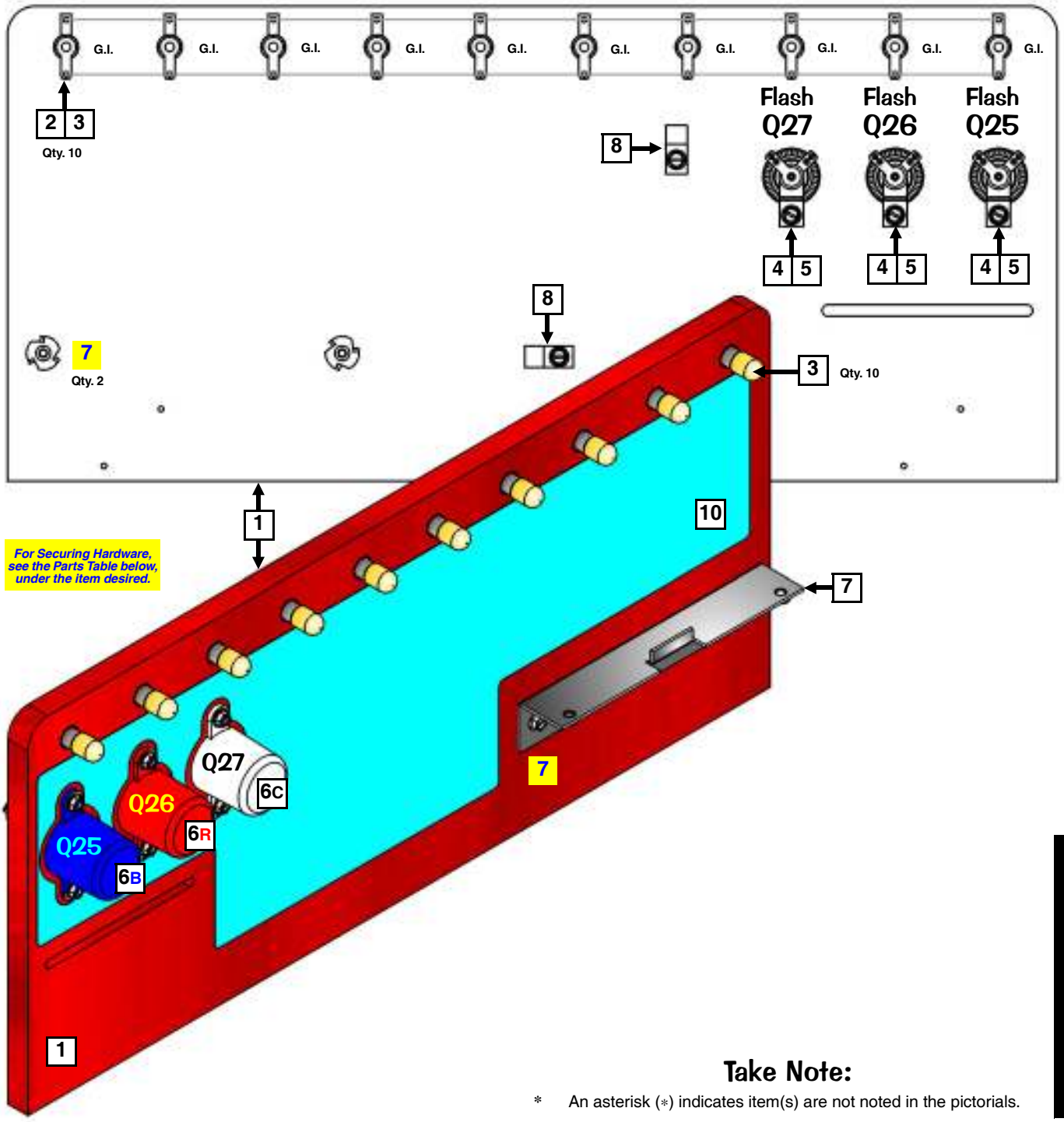

Take Note:

* An asterisk (*) indicates item(s) are not noted in the pictorials.

Nr.	BACK PANEL PARTS	QTY.	SPI PART Nr.
1	Back Panel (No Parts) **Red** Wood	1	525-5662-00
	Item 1 is secured below the playfield with by Item 9: #8 X 1/2" SHWH AB (Zinc) (Qty. 2/per) (234-5101-00) (ASM. REF. 500-7032-00, Items 1-9 ONLY)		
2	Socket, 2-Lug Staple Down	10	077-5000-00
3	#44 Bulb (Yellow) *Heavy Filament*	10	**165-5053-06-HF**
4	Socket, 2-Lug Stand-Up Short	3	077-5101-00
	Item 4 is secured to Item 1 by: #6 X 3/8" HWH Screw (Qty. 1/per) (234-5000-00)		
5	#89 Bulb (Clear) *Heavy Filament*	10	**165-5000-89-HF**
6B	Light Cover *with tabs* (**Blue**)	1	550-5031-05
6R	Light Cover *with tabs* (**Red**)	1	550-5031-02
6C	Light Cover *with tabs* (**Clear**)	1	550-5031-01
	Items 6B, 6R & 6C are secured by: #8 X 1/2" SHWH AB (Zinc) (Qty. 2/per) (234-5101-00)		

Nr.	BACK PANEL PARTS	QTY.	SPI PART Nr.
7	Stewie Mini-Pinball Rear Mnt. Bracket	1	535-9975-00
	Item 7 is secured to Item 1 by: #8-32 X 5/8" SHWH Ser. Swage (Zinc) (Qty. 2) (237-5975-03) **and** #8-32 T-Nut (Qty. 2) (240-5101-00)		
8	Clamp, 1/4" (Single)	2	040-5000-03
	Item 8 is secured to Item 1 by: #6 X 3/8" HWH (Qty. 1/per) (234-5000-00)		
9*	Bracket, Back Panel Mounting	2	535-8964-00
	Item 9 is secured to 1 by: #8 X 1/2" SHWH AB (Zinc) (Qty. 2/per) (234-5101-00)		
	Note: *For playfield location, see Page 49, Item 11.*		
10	***Kit:*** **Decal** *(incl. -10 Back Panel)*	1	802-5000-93
	Note: *Individual Decals (820-6394-XX) are not available individually, ordering of kit is required.*		

Stewie Mini-Pinball Assembly Overview

Reference 500-7018-00

Mini-Playfield Screened with Inserts (No Parts) 830-5193-01

Support Post 1.75" (254-5055-02)

Flat Rail #3 (535-9923-03)

3/8" Spacer (254-5000-12)

Plastic Enclosure Page 84

Plastic Ramp, Page 94

Flat Rail #2 (535-9923-02)

Mini-Post Short MS // #10-32 .875" Thread *(example shown on Page 54)* (Qty. 5) (530-5749-00), #10 Washer (7/32" I.D. X 1/2" O.D. X 1/16") (Qty. 1/per) (242-5003-00), #10 Washer (Qty. 1/per) (242-5073-01), #10-32 Nylon Stop Nut (Qty. 1/per) (240-5203-00) and Rubber Ring White 3/8" O.D. (Qty. 1/per) (545-5348-69)

Flat Rail #6 (535-9923-06)

3/4" Spacer (254-5000-07)

Kit: *(Plastics)* Page 53

Stand-Up Target Brackets, (Qty. 2/per) 535-9904-00 535-9927-00 see Page 141.

1-1/6" 1-Groove Post (Clear) (550-5059-01) Blk. Rubber Ring (545-5348-17) Post Wood Screw (530-5010-02)

Kit: *(Plastics)* Page 53

Kit: *(Plastics)* Page 53

Flat Rail #1 (535-9923-01)

Plastic Ramp, Page 94

Light Reflector (Silver) (Qty. 2) (545-5409-01), see Item 4®, Page 94 Bottom.

Slingshot (Female) 545-6192-00 (Qty. 2) Slingshot (Male) 545-6192-01 (Qty. 2) Rubber Rings 545-6276-00 (Qty. 2)

3/16" Spacer (254-5000-18)

Mini-Pinball 5/8" (260-5002-00)

Remove this plastic to access the screw to remove the mini-pinball from the playfield. See next page.

Shooter Ramp, Page 93

OPTO Bracket, Page 93

Shooter Assembly, Page 93

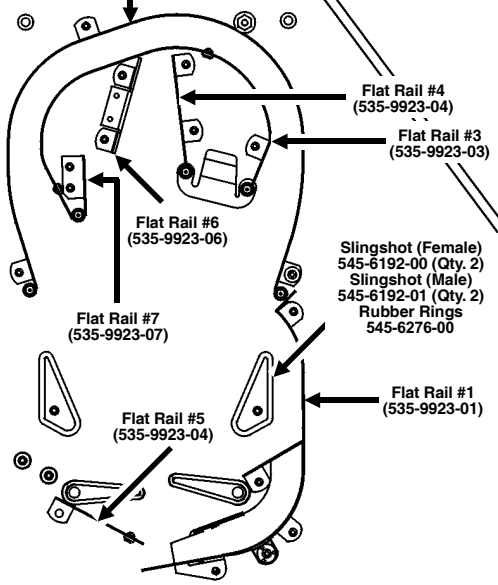

Stewie Mini-Pinball Assembly, Overview Continued

Reference 500-7018-00

2008+ FAMILY GUY PRODUCTION RUN NOTE:

The Stand-Up Target Sensor PCB, Piezo Switch & Brackets have been replaced by **511-5081-00** *(Mini-Stand-Up Target, 500-7098-00 + Diode, 112-5003-00)*. **If your Mini-Pinball have the Piezo Switches and you would like to convert to Mechanical Switches, order the OPTIONAL CONVERSION KIT 502-5055-93** which contains **1 each Mechanical Switch with diode, cable, connector & Z-Header (511-5081-93)** for easy plug-and-play set-up. If your game already has the mechanical switches soldered without a connector, order replacment Part Number **511-5081-00**.

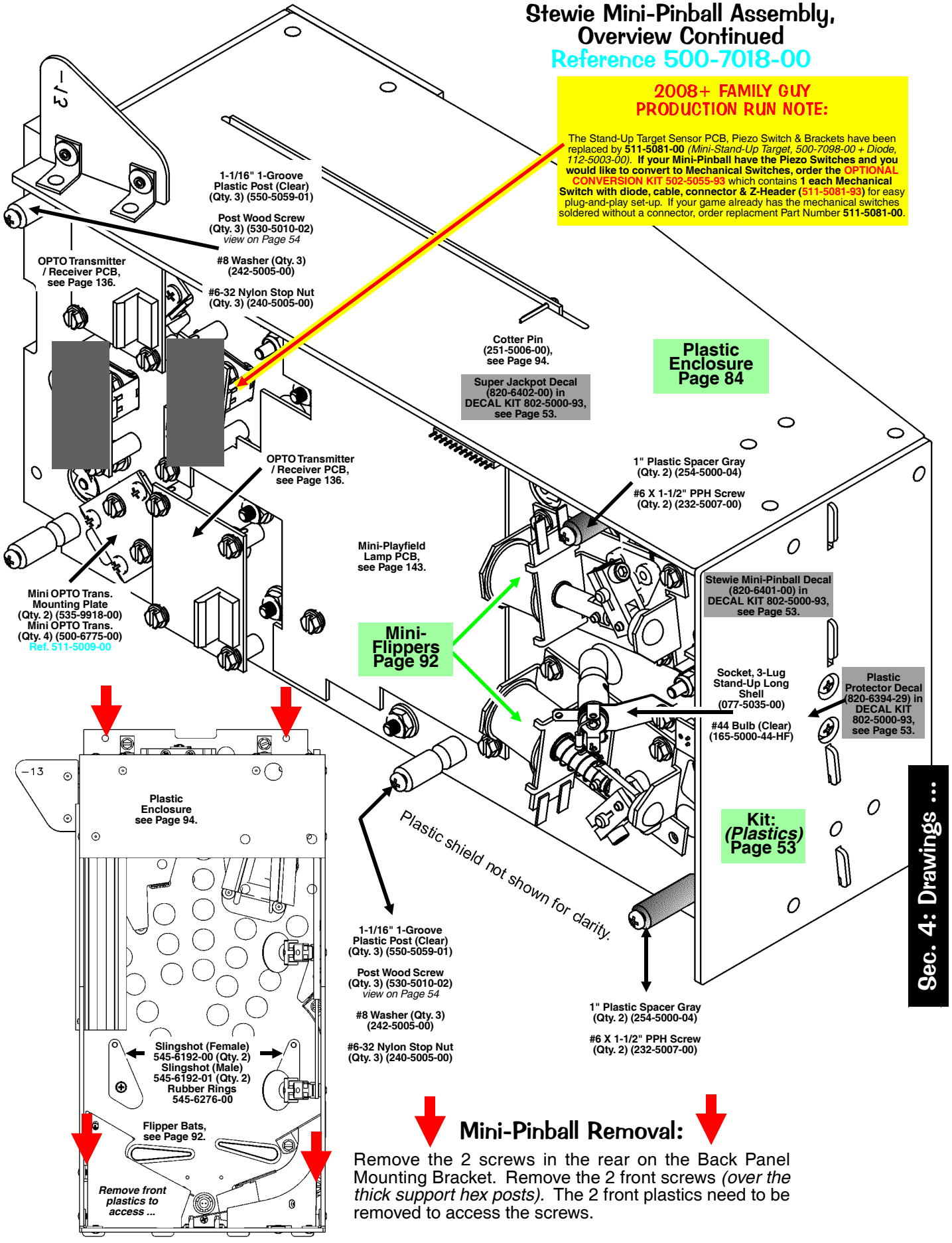

Mini-Pinball Removal:

Remove the 2 screws in the rear on the Back Panel Mounting Bracket. Remove the 2 front screws *(over the thick support hex posts)*. The 2 front plastics need to be removed to access the screws.

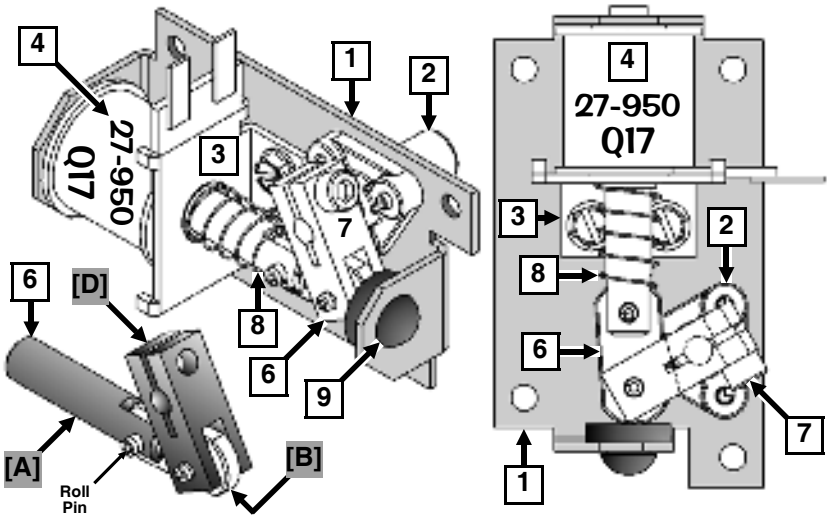

Mini-Playfield Flipper (Left) Assembly, 500-7019-00 (Items 1-9)

and Associated Parts: Yellow Mini-Flipper Bat & Shaft Assembly, 515-7591-06 (Items AP-A/-B)

Take Note:

↻ **Coil Note: ↻ NO DIODE ON LUGS.** *If replacing with a coil of the same gauge and turn and it has a diode on it, remove it before using.*

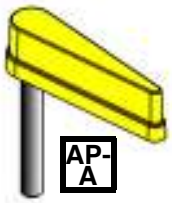

For Securing Hardware, see the Parts Table below, under the item desired.

Nr.	MINI-FLIPPER PARTS	QTY.	SPI PART Nr.
1	Bracket, Flipper Base Plate (**LEFT**)	1	515-7590-**00**
	Item 1 is secured below the playfield by: #8 X 1/2" SHWH AB (Zc.) (Qty. 4) (234-5101-00)		
2	Mini-Flipper Bat Bushing (Plastic)	1	545-6186-00
	Item 2 is secured to Item 1 by: #6 X 5/16" PPH (Zinc) Type-25 (Qty. 3) (237-5880-01)		
3	Bracket, Mini-Coil Retainer	1	535-9871-00
	Item 3 is secured to Item 1 by: #6-32 X 1/4" SHWH Ser. Swage (Zinc) Wax (Qty. 2) (237-5976-01)		
4	Mini-Coil, 27-950 [NO DIODE]	1	**090-5046-01-ND**
	COIL DOES NOT REQUIRE A DIODE. SEE ↻ COIL NOTE ABOVE FOR DETAILS.		
5	Mini-Coil Sleeve	1	545-5442-00
6	Mini-Plunger Assembly	1	511-5000-00
	For Individual Items use : [**A**] Mini-Plunger (**530-5734-00**), [**B**] Mini-Flipper Link (**545-6185-00**), [**C**] Crank Bushing (**530-5737-00**) **and** [**D**] Mini-Crank Bar (**530-5738-00**). ***Note : 6[C] located in 6[D] on 6[B] side. ◄ 6[B] is secured to 6[A] / [D] by:*** Roll (Spring) Pin .125" X .5" (Qty. 2) (251-5041-00)		

Nr.	MINI-FLIPPER PARTS	QTY.	SPI PART Nr.
7	Set Screw: #8-32 X 3/8" SHCS (Zinc)	1	237-5897-00
	Assembly Note : *Crank must be oriented so that the slot does not interfere with the link (screw head should be pointed away from the coil).*		
8	Mini-Compression (Relay) Spring	1	266-5091-00
9	Rubber Bumper (Grommet)	1	545-5105-00
	Ordering Note: *If **500-7019-00** is unavailable, order the individual part(s) actually required. All parts are identical to 500-7019-01 except for Item 1, Bracket, Flipper Base Plate (515-7590-01).*		

ASSOCIATED PARTS **ARE NOT INCLUDED** WITH THE ABOVE ASSEMBLY.

Nr.	ASSOCIATED PART(S)	QTY.	SPI PART Nr.
AP-A	**YEL.** Mini-Flipper Bat & Shaft Asm.	1	515-7591-06
AP-B	Mini-Flipper **BLACK** Rubber Ring	1	545-6187-00

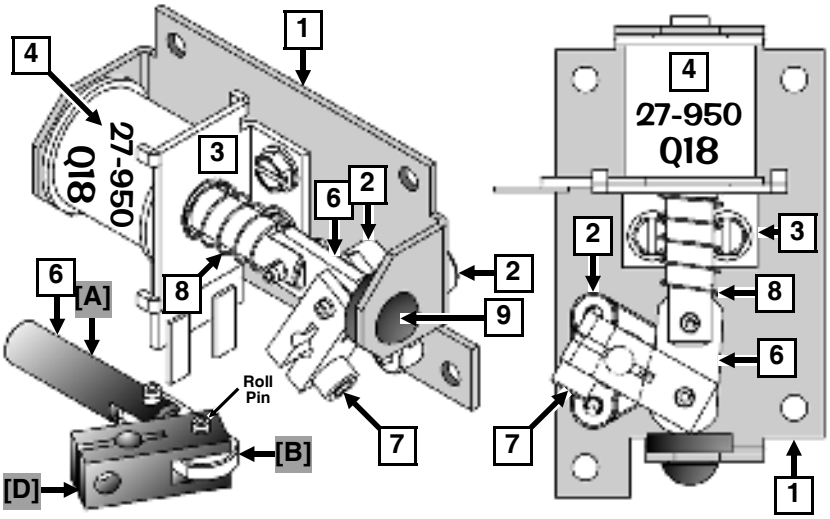

Mini-Playfield Flipper (Right) Assembly, 500-7019-01 (Items 1-9)

and Associated Parts: Yellow Mini-Flipper Bat & Shaft Assembly, 515-7591-06 (Items AP-A/-B)

Take Note:

↻ **Coil Note: ↻ NO DIODE ON LUGS.** *If replacing with a coil of the same gauge and turn and it has a diode on it, remove it before using.*

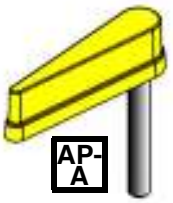

For Securing Hardware, see the Parts Table below, under the item desired.

Nr.	MINI-FLIPPER PARTS	QTY.	SPI PART Nr.
1	Bracket, Flipper Base Plate (**RIGHT**)	1	515-7590-**01**
	Item 1 is secured below the playfield by: #8 X 1/2" SHWH AB (Zc.) (Qty. 4) (234-5101-00)		
2	Mini-Flipper Bat Bushing (Plastic)	1	545-6186-00
	Item 2 is secured to Item 1 by: #6 X 5/16" PPH (Zinc) Type-25 (Qty. 3) (237-5880-01)		
3	Bracket, Mini-Coil Retainer	1	535-9871-00
	Item 3 is secured to Item 1 by: #6-32 X 1/4" SHWH Ser. Swage (Zinc) Wax (Qty. 2) (237-5976-01)		
4	Mini-Coil, 27-950 [NO DIODE]	1	**090-5046-01-ND**
	COIL DOES NOT REQUIRE A DIODE. SEE ↻ COIL NOTE ABOVE FOR DETAILS.		
5	Mini-Coil Sleeve	1	545-5442-00
6	Mini-Plunger Assembly	1	511-5000-00
	For Individual Items use : [**A**] Mini-Plunger (**530-5734-00**), [**B**] Mini-Flipper Link (**545-6185-00**), [**C**] Crank Bushing (**530-5737-00**) **and** [**D**] Mini-Crank Bar (**530-5738-00**). ***Note : 6[C] located in 6[D] on 6[B] side. ◄ 6[B] is secured to 6[A] / [D] by:*** Roll (Spring) Pin .125" X .5" (Qty. 2) (251-5041-00)		

Nr.	MINI-FLIPPER PARTS	QTY.	SPI PART Nr.
7	Set Screw: #8-32 X 3/8" SHCS (Zinc)	1	237-5897-00
	Assembly Note : *Crank must be oriented so that the slot does not interfere with the link (screw head should be pointed away from the coil).*		
8	Mini-Compression (Relay) Spring	1	266-5091-00
9	Rubber Bumper (Grommet)	1	545-5105-00
	Ordering Note: *If **500-7019-01** is unavailable, order the individual part(s) actually required. All parts are identical to 500-7019-00 except for Item 1, Bracket, Flipper Base Plate (515-7590-00).*		

ASSOCIATED PARTS **ARE NOT INCLUDED** WITH THE ABOVE ASSEMBLY.

Nr.	ASSOCIATED PART(S)	QTY.	SPI PART Nr.
AP-A	**YEL.** Mini-Flipper Bat & Shaft Asm.	1	515-7591-06
AP-B	Mini-Flipper **BLACK** Rubber Ring	1	545-6187-00

Mini-Playfield Shooter Assembly, 500-7023-00 (Items 1-7)

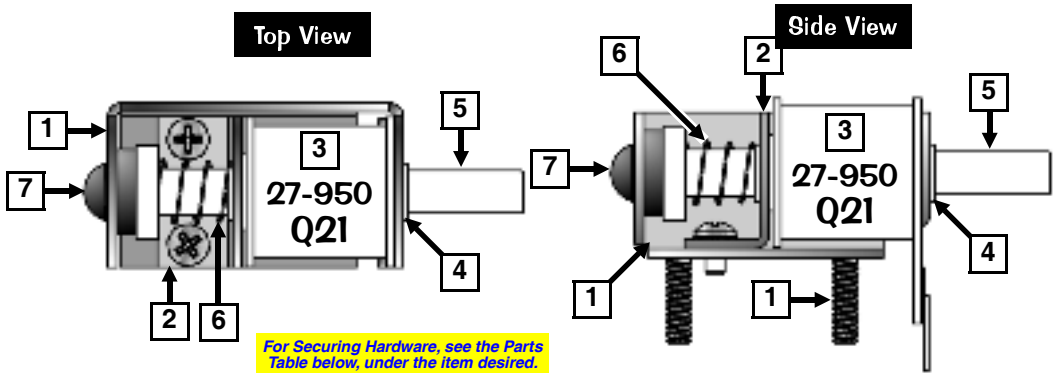

Nr.	MINI-SHOOTER PARTS	QTY.	SPI PART Nr.
1	Bracket, Shooter / Mini-Kicker	1	515-7598-00
	Item 1 is secured below the playfield by: #8 Washer (Qty. 2) (242-5005-00) **and** #8-32 Nylon Stop Nut (Qty. 2) (240-5102-00)		
2	Bracket, Mini-Coil Retainer	1	535-9886-00
	Item 2 is secured to Item 1 by: #6-32 X 1/4" PPH MS Sems (Zinc) (Qty. 2) (232-5200-00)		
3	Mini-Coil, 27-950 [NO DIODE]	1	**090-5046-01-ND**
	COIL DOES NOT REQUIRE A DIODE. SEE ⏲ COIL NOTE ABOVE FOR DETAILS.		
4	Mini-Coil Sleeve *(diff. from mini-flips)*	1	545-**5500**-00
5	Mini-Plunger Assembly	1	515-7594-01
	Individual Items Reference Only : [**A**] Mini-Plunger Tip 1.36" (**530-5740-01**) **and** [**B**] Mini-Plunger Bottom (**530-5741-00**)		
6	Mini-Compression (Relay) Spring	1	266-5091-00
7	Rubber Bumper (Grommet)	1	545-5105-00
	Ordering Note: *If **500-7023-00** is unavailable, order the individual part(s) actually required.*		

Mini-Playfield Steel Shooter Ramp & Flap Assembly and OPTO Assembly Individual Parts Only (Items 1-6)

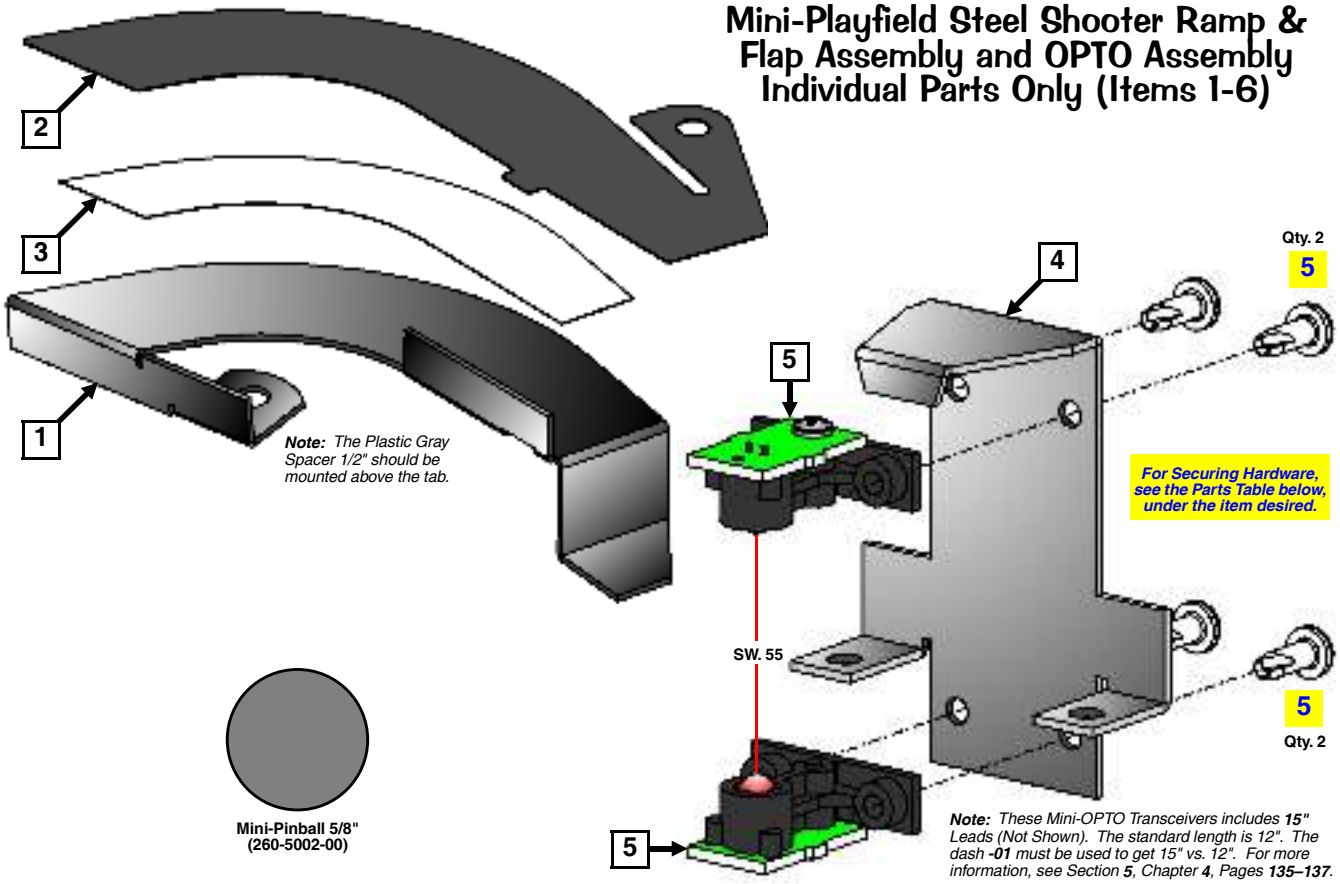

Nr.	MINI-SHOOTER PARTS	QTY.	SPI PART Nr.
1	Mini-Shooter Ramp	1	535-9921-00
	Item 1 is secured to the playfield by: #6 X 1" SHWH (Qty. 1) (234-5005-00) **and** Spacer Gray 1/2" X 3/8" (Qty. 1) (254-5000-01) (ASM. REF. 511-5056-00, Items 1-3 ONLY)		
2	Mini-Ramp Flap	1	535-9924-01
3	Tape, Double-Side (Die-Cut)	1	000-0667-00
	Item 2 is secured to Item 1 by Item 3 and secured to the playfield by: #6 X 3/8" HWH Screw (Qty. 1) (234-5000-00)		
4	Bracket, OPTO Mounting (Shooter)	1	535-9976-00
	Item 4 is secured below the playfield by: #8 X 1/2" SHWH AB (Zc.) (Qty. 4) (234-5101-00)		
5	Mini OPTO Transceiver PCB Asm.	2	500-6775-01
	Item 5 is secured to Item 1 by: #6 X 3/8" PPH (Zinc) Type-25 (Qty. 2/per) (237-5880-00) (ASM. REF. 511-5012-00, Items 4-5 ONLY)		
6	Steel Mini-Pinball (5/8" ø)	1	260-5002-00

Mini-Playfield Plastic Ramp Assembly, Individual Parts Only (Items 1-4)

Nr.	MINI-PLASTIC RAMP PARTS	QTY.	SPI PART Nr.
1	Plastic Ramp, Mini-Pinball *(No Parts)*	1	545-6193-00
	Item 1 is secured @ Left by: Cotter Pin (1/16" ø X 1/2" Long (Zinc)) (Qty. 1) (251-5006-00) (ASM. REF. 511-5011-00, Items 1–3 ONLY)		
2	Mini OPTO Transceiver PCB Asm.	2	500-6775-01
	Item 2 is secured to Item 1 by: #6 X 3/8" PPH (Zinc) Type-25 (Qty. 2/per) (237-5880-00)		
3	Ramp Flap	1	535-9929-00
	Item 3 is secured to the playfield by: Mini-Post Short MS // #10-32 .875" Thread *(example shown on Page **54**)* (Qty. 2) (530-5749-00), #10 Washer (7/32" I.D. X 1/2" O.D. X 1/16") (Qty. 1/per) (242-5003-00), #10 Washer (Qty. 1/per) (242-5073-01), #10-32 Nylon Stop Nut (Qty. 1/per) (240-5203-00) **and** Rubber Ring White 3/8" O.D. (Qty. 1/per) (545-5348-69)		

Nr.	MINI-PLASTIC RAMP PARTS	QTY.	SPI PART Nr.
4	***Kit:* Plastic** *(incl. -22 Ramp Cover)*	1	803-5000-93
	Note: *Individual Plastics (830-6054-XX) are not available individually, ordering of kit is required.*		
	Item 4 is secured to Item 1 @ Right by: #8-32 X 3/8" PPH MS (Sems) (Qty. 1) (232-5301-00) **and @ Left Front** by: *Existing hardware of Item 2 .*		

For Securing Hardware, see the Parts Table below, under the item desired.

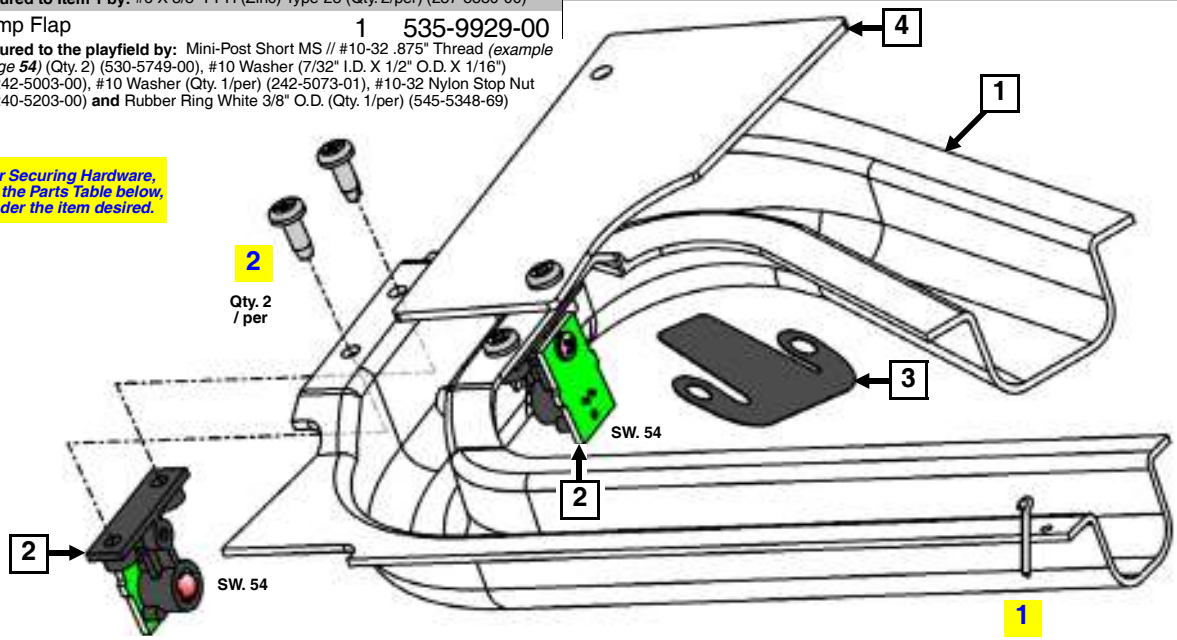

Mini-Pinball Plastic Enclosure Assembly, 510-5011-00 (Items 1-4)

Nr.	ENCLOSURE PARTS	QTY.	SPI PART Nr.
1®	***Kit:* Plastic** *(incl. -01– -06 + -13)*	1	803-5001-93
	Note: *Individual Plastics (830-6061-XX + 830-6062-13) are available **unassembled**. Use above part number 803-5001-93. To order it assembled use part number **510-5011-00**.*		

Take Note:

® "R" indicates Item noted is secured with rivet(s) as listed.

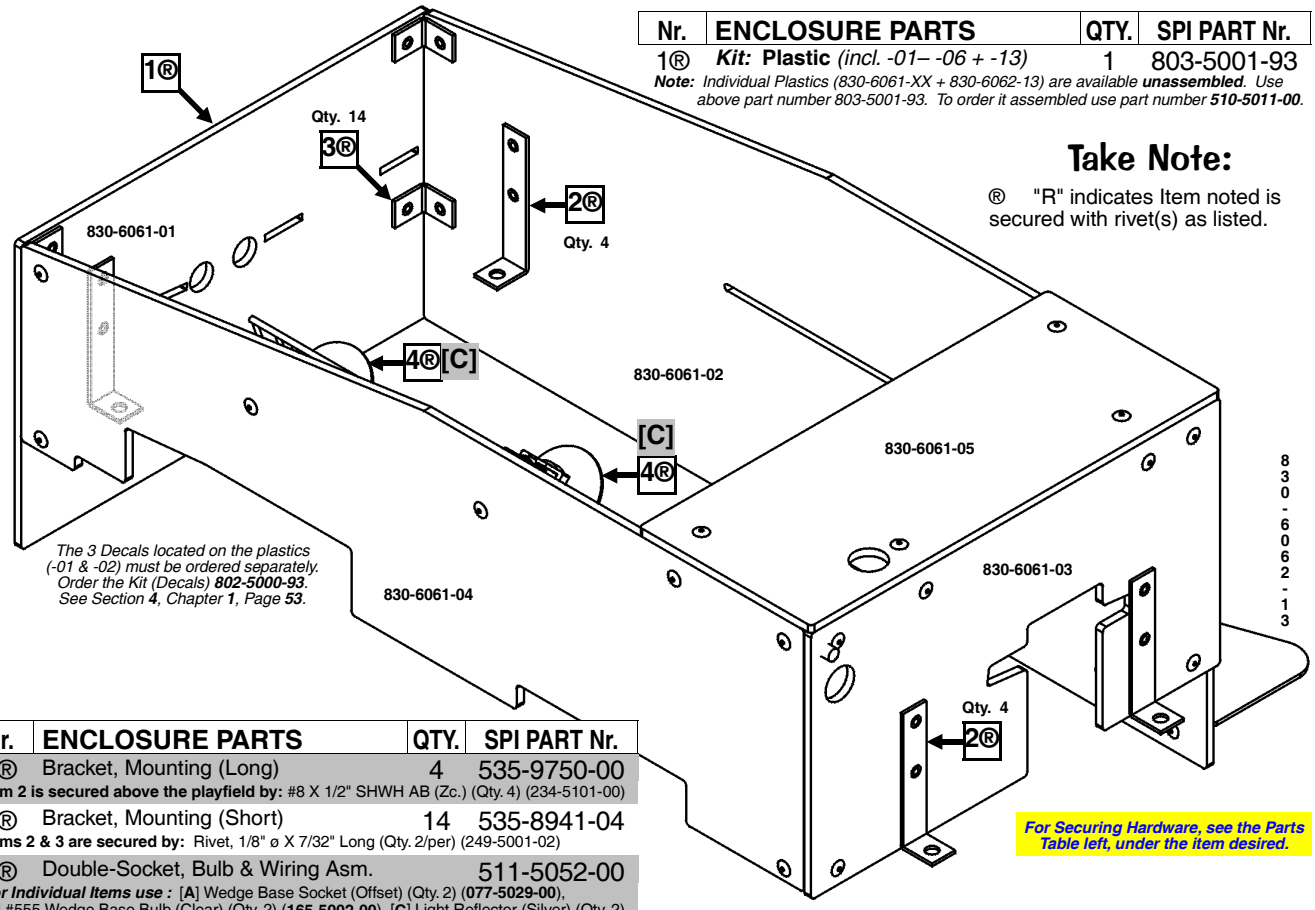

*The 3 Decals located on the plastics (-01 & -02) must be ordered separately. Order the Kit (Decals) **802-5000-93**. See Section **4**, Chapter **1**, Page **53**.*

Nr.	ENCLOSURE PARTS	QTY.	SPI PART Nr.
2®	Bracket, Mounting (Long)	4	535-9750-00
	Item 2 is secured above the playfield by: #8 X 1/2" SHWH AB (Zc.) (Qty. 4) (234-5101-00)		
3®	Bracket, Mounting (Short)	14	535-8941-04
	Items 2 & 3 are secured by: Rivet, 1/8" ø X 7/32" Long (Qty. 2/per) (249-5001-02)		
4®	Double-Socket, Bulb & Wiring Asm.		511-5052-00
	For Individual Items use : [**A**] Wedge Base Socket (Offset) (Qty. 2) (**077-5029-00**), [**B**] #555 Wedge Base Bulb (Clear) (Qty. 2) (**165-5002-00**), [**C**] Light Reflector (Silver) (Qty. 2) (**545-5409-01**) *For Actual Size views, see Section **4**, Chapter **1**, Page **64**.*		

For Securing Hardware, see the Parts Table left, under the item desired.

Schematics, Wiring & Printed Circuit Boards

Table of Contents for Section 5

Chapter 1, Backbox Wiring ..... 96 – 98

- Table of Contents for Section 5 95
- Coils Detailed Chart Table 96
- Backbox I/O Power Driver Board Detailed Wiring Diagram 97
- Backbox Board Layout Wiring Diagram 98

Chapter 2, Playfield Wiring ..... 99 – 103

- General Illumination Circuit Detailed Wiring Diagram 99
- Playfield Switch Wiring Diagram 100
- Playfield Lamp Wiring Diagram 101
- Playfield Terminal Strips, Fuses & Misc. Wiring Descriptions & Locations 102
- 3-Flipper Circuit Wiring Diagram 103

Chapter 3, Cabinet and Coin Door Wiring ..... 105 – 108

- Transformer Power Wiring Diagram 105
- Cabinet Wiring Diagram 106
- Coin Door Wiring Diagram 107

Chapter 4, Printed Circuit Boards (PCBs) ..... 109 – 138

- Trough Up-Kicker Dual OPTO PCBs (515-0173-00 & 515-0174-00) Theory of Operation & Schematic ..... (Top) 109
  - Trough Up-Kicker Dual OPTO PCBs (515-0173-00 & 515-0174-00) Component Layout & Parts ..... (Bot) 109
- OPTO Troubleshooting ..... (Top) 110
  - Trough Dual OPTO PCBs Alignment / Tests for LED1 & LED2 110-111
- I/O Power Driver PCB S.A.M. System (520-5249-00) Schematic (Sheet 1 of 4) 112-113
- I/O Power Driver PCB S.A.M. System (520-5249-00) Schematic (Sheet 2 of 4) 114-115
- I/O Power Driver PCB S.A.M. System (520-5249-00) Schematic (Sheet 3 of 4) 116-117
- I/O Power Driver PCB S.A.M. System (520-5249-00) Schematic (Sheet 4 of 4) 118-119
  - I/O Power Driver PCB S.A.M. System (520-5249-00) Component Layout 120
  - I/O Power Driver PCB S.A.M. System (520-5249-00) Parts 121
- CPU / Sound PCB S.A.M. System (520-5246-00) Schematic (Sheet 1 of 5) 122-123
- CPU / Sound PCB S.A.M. System (520-5246-00) Schematic (Sheet 2 of 5) 124-125
- CPU / Sound PCB S.A.M. System (520-5246-00) Schematic (Sheet 3 of 5) 126-127
- CPU / Sound PCB S.A.M. System (520-5246-00) Schematic (Sheet 4 of 5) 128-129
- CPU / Sound PCB S.A.M. System (520-5246-00) Schematic (Sheet 5 of 5) 130-131
  - CPU / Sound PCB S.A.M. System (520-5246-00) Component Layout 132
  - CPU / Sound PCB S.A.M. System (520-5246-00) Parts 132-133
- Display Power Supply PCB (520-5138-00) Schematic 134
  - Display Power Supply PCB (520-5138-00) Component Layout & Parts 134
- Playfield Switches OPTO Transceiver PCBs (500-6755-00) Schematic ..... (Top) 135
- Playfield OPTO Transmitter / Receiver Amplifier PCB (520-5239-01) Schematic ..... (Bot) 135
  - Playfield OPTO Transmitter / Receiver Amplifier PCB (520-5239-01) Component Layout & Parts ..... (Top) 136
  - Playfield OPTO Transmitter / Receiver Amplifier PCB (520-5239-01) Wiring ..... (Bot) 136
  - Playfield OPTO Transmitter / Receiver Amplifier PCB (520-5239-01) Locations 137
- OPTO Interrupter PCB (520-5252-04) Schematic (4-Bank Drop Target) 138
  - OPTO Interrupter PCB (520-5252-04) Component Layout & Parts (4-Bank Drop Target) ..... (Top) 139
- OPTO Interrupter PCB (520-5252-01) Schematic (1-Bank Drop Target) ..... (Bot) 139
  - OPTO Interrupter PCB (520-5252-01) Component Layout & Parts (1-Bank Drop Target) ..... (Bot) 139
- Stand-Up Target Sensor PCB (520-5263-00) Theory of Operation & Schematic 140
  - Stand-Up Target Sensor PCB (511-5042-01) Component Layout & Parts 141
- Mini-Playfield Lamp PCB (520-5264-00) Schematic 142
  - Mini-Playfield Lamp PCB (511-5046-00) Component Layout & Parts 143
- Stepper Motor Controller PCB (520-5261-00) Schematic ..... (Top) 144
  - Stepper Motor Controller PCB (511-5045-00) Component Layout & Parts ..... (Bot) 144
- Auxiliary (3X Transistor) Driver PCB (in Backbox) with the Coin/Ticket Meter and Ticket Disp. Wiring Diagram 145
- Auxiliary (3X Transistor) Driver PCB Schematic ..... (Top) 146
  - Auxiliary (3X Transistor) Driver PCB Component Layout ..... (Bot) 146

Use the below ***Coils Detailed Chart Table*** in conjunction with *Sec. **5**, Chp. **1**, Backbox I/O Power Driver Board Detailed Wiring Diagram (I/O Board Connectors J6, J7, J8 & J9) and Backbox Board Layout Wiring Diagram:*

	High Current Coils Group 1	Drive Transistor	Driver Ouput Board	Power Line Color	Power Line Connection	Power Voltage	Drive Transistor Control Line Color	D.T. Control Line Connect	Coil GA-Turn or Bulb Type
#1	TROUGH UP-KICKER	Q1	▲ I/O Power Driver ▼	YEL-VIO	J10-P9/10	50v DC	BRN-BLK	J8-P1	26-1200 ↻ 090-5044-ND
#2	AUTO LAUNCH	Q2		YEL-VIO	J10-P9/10	50v DC	BRN-RED	J8-P3	24-940 ↻ 090-5036-ND
#3	4-BANK DROP TARGET	Q3		YEL-VIO	J10-P9/10	50v DC	BRN-ORG	J8-P4	24-940 ↻ 090-5036-ND
#4	BALL SAVER DOWN (DEATH POST)	Q4		YEL-VIO	J10-P9/10	50v DC	BRN-YEL	J8-P5	32-1800 ↻ 090-5031-00-ND
#5	CLAM EJECT (VUK)	Q5		YEL-VIO	J10-P9/10	50v DC	BRN-GRN	J8-P6	27-1500 ↻ 090-5004-ND
#6	1-BANK DROP TARGET	Q6		YEL-VIO	J10-P9/10	50v DC	BRN-BLU	J8-P7	24-940 ↻ 090-5036-ND
#7	LEFT SLINGSHOT	Q7		YEL-VIO	J10-P9/10	50v DC	BRN-VIO	J8-P8	27-1500 ↻ 090-5004-ND
#8	RIGHT SLINGSHOT	Q8		YEL-VIO	J10-P9/10	50v DC	BRN-GRY	J8-P9	27-1500 ↻ 090-5004-ND

	High Current Coils Group 2	Drive Transistor	Driver Ouput Board	Power Line Color	Power Line Connection	Power Voltage	Drive Transistor Control Line Color	D.T. Control Line Connect	Coil GA-Turn or Bulb Type
#9	BOTTOM BUMPER	Q9	▲ I/O Power Driver ▼	YEL-VIO	J10-P9/10	50v DC	BLU-BRN	J9-P1	26-1200 ↻ 090-5044-ND
#10	RIGHT BUMPER	Q10		YEL-VIO	J10-P9/10	50v DC	BLU-RED	J9-P2	26-1200 ↻ 090-5044-ND
#11	TOP BUMPER	Q11		YEL-VIO	J10-P9/10	50v DC	BLU-ORG	J9-P4	26-1200 ↻ 090-5044-ND
#12	BALL SAVER UP (DEATH POST)	Q12		YEL-VIO	J10-P9/10	50v DC	BLU-YEL	J9-P5	26-1200 ↻ 090-5044-ND
#13	TV EJECT (SCOOP)	Q13		YEL-VIO	J10-P9/10	50v DC	BLU-GRN	J9-P6	23-800 ↻ 090-5001-ND
#14	UPPER LEFT FLIPPER	Q14		BLU-YEL~3A Fuse~RED-YEL	J10-P6/7	50v DC	BLU-BLK	J9-P7	23-1500 ↻ 090-5062-ND
#15	LEFT FLIPPER (50v RED/YEL)	Q15		GRY-YEL~3A Fuse~RED-YEL	J10-P6/7	50v DC	ORG-GRY	J9-P8	23-1100 ↻ 090-5030-ND
#16	RIGHT FLIPPER (50v RED/YEL)	Q16		BLU-YEL~3A Fuse~RED-YEL	J10-P6/7	50v DC	ORG-VIO	J9-P9	23-1100 ↻ 090-5030-ND

	Low Current Coils Group 1	Drive Transistor	Driver Ouput Board	Power Line Color	Power Line Connection	Power Voltage	Drive Transistor Control Line Color	D.T. Control Line Connect	Coil GA-Turn or Bulb Type
#17	LEFT MINI-FLIPPER (UPR. P/F)	Q17	▲ I/O Power Driver ▼	BROWN	J7-P1	20v DC	VIO-BRN	J7-P2	27-950 ↻ 090-5046-01-ND
#18	RIGHT MINI-FLIPPER (UPR. P/F)	Q18		BROWN	J7-P1	20v DC	VIO-RED	J7-P3	27-950 ↻ 090-5046-01-ND
#19	EVIL MONKEY (LEFT RAMP GATE)	Q19		BROWN	J7-P1	20v DC	VIO-ORG	J7-P4	32-1250 ↻ 515-6916-01-ND
#20	STEWIE MOTOR DRIVE	Q20		RED	J16-P4/8	5v DC	VIO-WHT	J7-P6	Stpr. Motor 511-5043-00
#21	MINI-TROUGH (SHOOTER UPR. P/F)	Q21		BROWN	J7-P1	20v DC	VIO-GRN	J7-P7	27-950 ↻ 090-5046-01-ND
#22	MEG SHAKE	Q22		BROWN	J7-P1	20v DC	VIO-BLU	J7-P8	27-950 ↻ 090-5046-01-ND
#23	FLASH: LOWER LEFT	Q23		ORANGE	J6-P10	20v DC	VIO-BLK	J7-P9	#89 Bulb 165-5000-89
#24	OPTIONAL COIL	Q24		RED	J16-P4>8	5v DC	VIO-GRY	J7-P10	Opt. 5v

Diode On Terminal Strip (if noted)

	Low Current Coils Group 2	Drive Transistor	Driver Ouput Board	Power Line Color	Power Line Connection	Power Voltage	Drive Transistor Control Line Color	D.T. Control Line Connect	Coil GA-Turn or Bulb Type
#25	FLASH: BACKPANEL LEFT (BLUE)	Q25	▲ I/O Power Driver ▼	ORANGE	J6-P10	20v DC	BLK-BRN	J6-P1	#89 Bulb 165-5000-89
#26	FLASH: BACKPANEL CTR (RED)	Q26		ORANGE	J6-P10	20v DC	BLK-RED	J6-P2	#89 Bulb 165-5000-89
#27	FLASH: BACKPANEL RT (CLEAR)	Q27		ORANGE	J6-P10	20v DC	BLK-ORG	J6-P3	#89 Bulb 165-5000-89
#28	FLASH: BEER CAN (BRIAN)	Q28		ORANGE	J6-P10	20v DC	BLK-YEL	J6-P4	#89 Bulb 165-5000-89
#29	FLASH: MEG	Q29		ORANGE	J6-P10	20v DC	BLK-GRN	J6-P5	#89 Bulb 165-5000-89
#30	FLASH: RIGHT ORBIT (SPINNER)	Q30		ORANGE	J6-P10	20v DC	BLK-BLU	J6-P6	#89 Bulb 165-5000-89
#31	FLASH: POPS (BUMPERS)	Q31		ORANGE	J6-P10	20v DC	BLK-VIO	J6-P7	#89 Bulb 165-5000-89
#32	FLASH: LOWER RIGHT	Q32		ORANGE	J6-P10	20v DC	BLK-GRY	J6-P8	#89 Bulb 165-5000-89

Note: In Test Flash Lamps Menu ("Flash" Icon), Flashers tested are all Flash Lamps located between Q1-Q32 (This Game: Q23, Q25-Q32)

↻ **Coil Note:** ↻ **-ND** *means 'No Diode'. -00**B** or -00**T** can be used for coil replacements, but the diode must be removed. Call for more info.*

Backbox I/O Power Driver Board (Coils Q1-Q32) Detailed Wiring Diagram

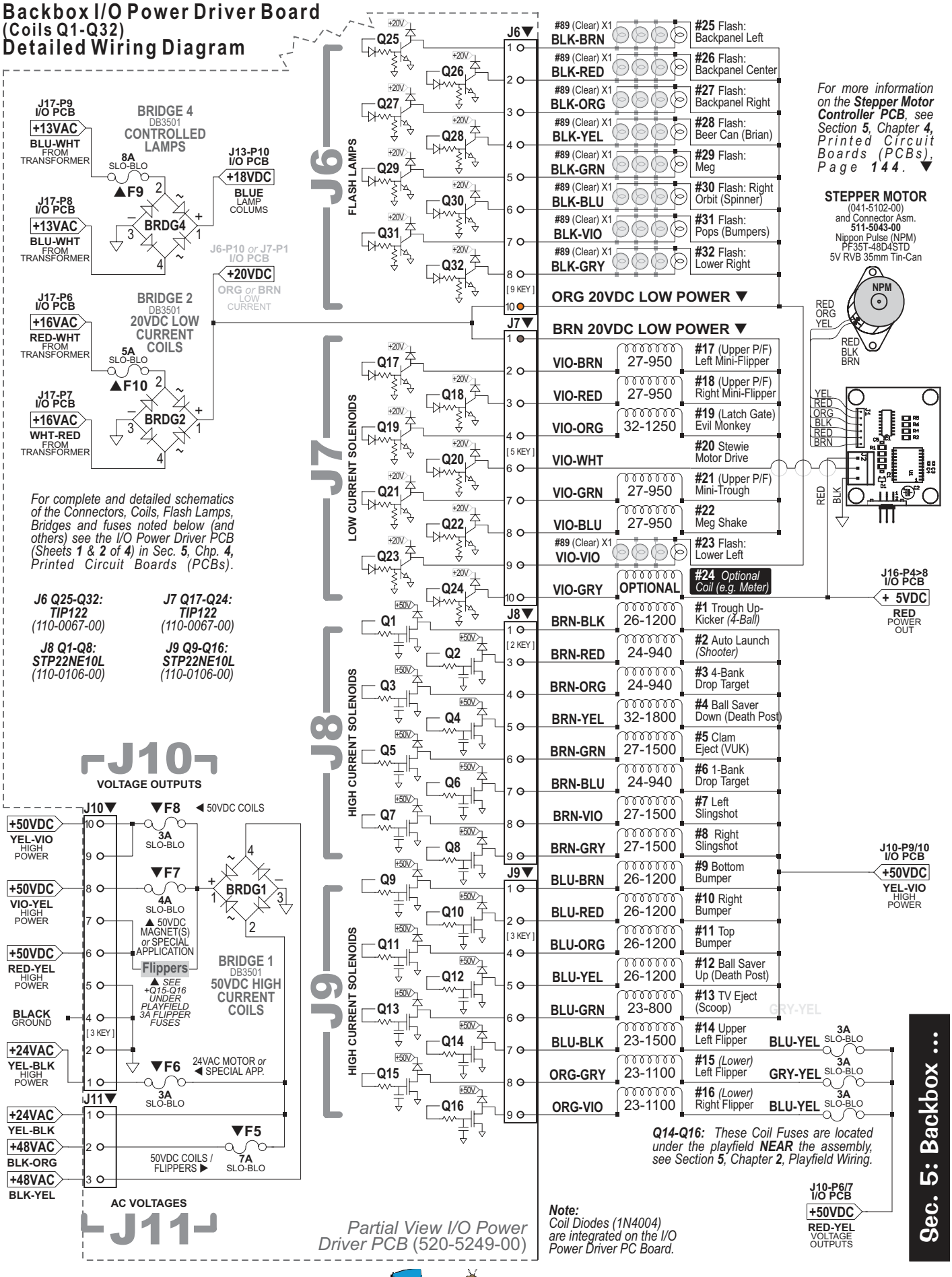

*For complete and detailed schematics of the Connectors, Coils, Flash Lamps, Bridges and fuses noted below (and others) see the I/O Power Driver PCB (Sheets **1** & **2** of **4**) in Sec. **5**, Chp. **4**, Printed Circuit Boards (PCBs).*

J6 Q25-Q32: ***TIP122*** *(110-0067-00)*

J7 Q17-Q24: ***TIP122*** *(110-0067-00)*

J8 Q1-Q8: ***STP22NE10L*** *(110-0106-00)*

J9 Q9-Q16: ***STP22NE10L*** *(110-0106-00)*

*For more information on the **Stepper Motor Controller PCB**, see Section **5**, Chapter **4**, Printed Circuit Boards (PCBs), Page **144**.* ▼

Q14-Q16: *These Coil Fuses are located under the playfield **NEAR** the assembly, see Section **5**, Chapter **2**, Playfield Wiring.*

Note: *Coil Diodes (1N4004) are integrated on the I/O Power Driver PC Board.*

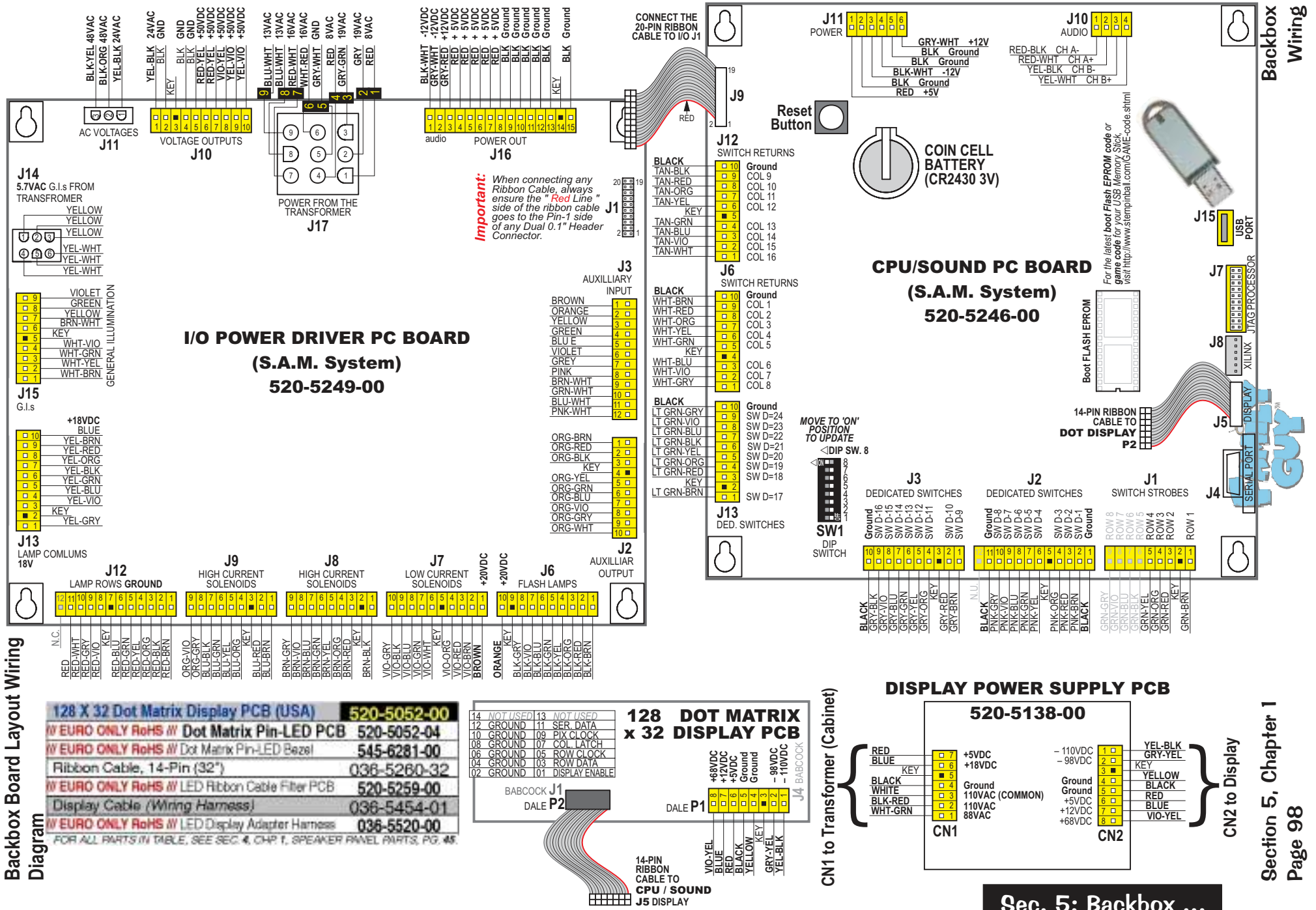
I/O POWER DRIVER PC BOARD
(S.A.M. System)
520-5249-00
CPU/SOUND PC BOARD
(S.A.M. System)
520-5246-00
Backbox Wiring
Backbox Board Layout Wiring Diagram
CONNECT THE 20-PIN RIBBON CABLE TO I/O J1
AC VOLTAGES J11
VOLTAGE OUTPUTS J10
POWER FROM THE TRANSFORMER J17
audio
POWER OUT J16
J9
RED
J11 POWER
J10 AUDIO
Reset Button
COIN CELL BATTERY (CR2430 3V)
J12 SWITCH RETURNS
J6 SWITCH RETURNS
J13 DED. SWITCHES
Important: When connecting any Ribbon Cable, always ensure the " Red Line " side of the ribbon cable goes to the Pin-1 side of any Dual 0.1" Header Connector.
J1
J14 5.7VAC G.I.s FROM TRANSFROMER
J15 G.I.s
GENERAL ILLUMINATION
J13 LAMP COMLUMS 18V
+18VDC
J3 AUXILLIARY INPUT
J2 AUXILLIAR OUTPUT
MOVE TO 'ON' POSITION TO UPDATE
DIP SW. 8
SW1 DIP SWITCH
J3 DEDICATED SWITCHES
J2 DEDICATED SWITCHES
J1 SWITCH STROBES
J12 LAMP ROWS GROUND
J9 HIGH CURRENT SOLENOIDS
J8 HIGH CURRENT SOLENOIDS
J7 LOW CURRENT SOLENOIDS
+20VDC
+20VDC
J6 FLASH LAMPS
J15 USB PORT
J7 JTAG PROCESSOR
J8 XILINX
Boot FLASH EPROM
For the latest boot Flash EPROM code or game code for your USB Memory Stick, visit http://www.stempinball.com/GAME-code.shtml
14-PIN RIBBON CABLE TO DOT DISPLAY P2
J5 DISPLAY
J4 SERIAL PORT
128 X 32 Dot Matrix Display PCB (USA) 520-5052-00
W EURO ONLY RoHS W Dot Matrix Pin-LED PCB 520-5052-04
W EURO ONLY RoHS W Dot Matrix Pin-LED Bezel 545-6281-00
Ribbon Cable, 14-Pin (32") 036-5260-32
W EURO ONLY RoHS W LED Ribbon Cable Filter PCB 520-5259-00
Display Cable (Wiring Harness) 036-5454-01
W EURO ONLY RoHS W LED Display Adapter Harness 036-5520-00
FOR ALL PARTS IN TABLE, SEE SEC. 4, CHP. 1, SPEAKER PANEL PARTS, PG. 45.
128 DOT MATRIX x 32 DISPLAY PCB
BABCOCK J1
DALE P2
DALE P1
J4 BABCOCK
14-PIN RIBBON CABLE TO CPU / SOUND J5 DISPLAY
DISPLAY POWER SUPPLY PCB
520-5138-00
CN1 to Transformer (Cabinet)
CN1
CN2
CN2 to Display
Section 5, Chapter 1
Page 98
Sec. 5: Backbox ...

Playfield Wiring

General Illumination Circuit Detailed Wiring Diagram

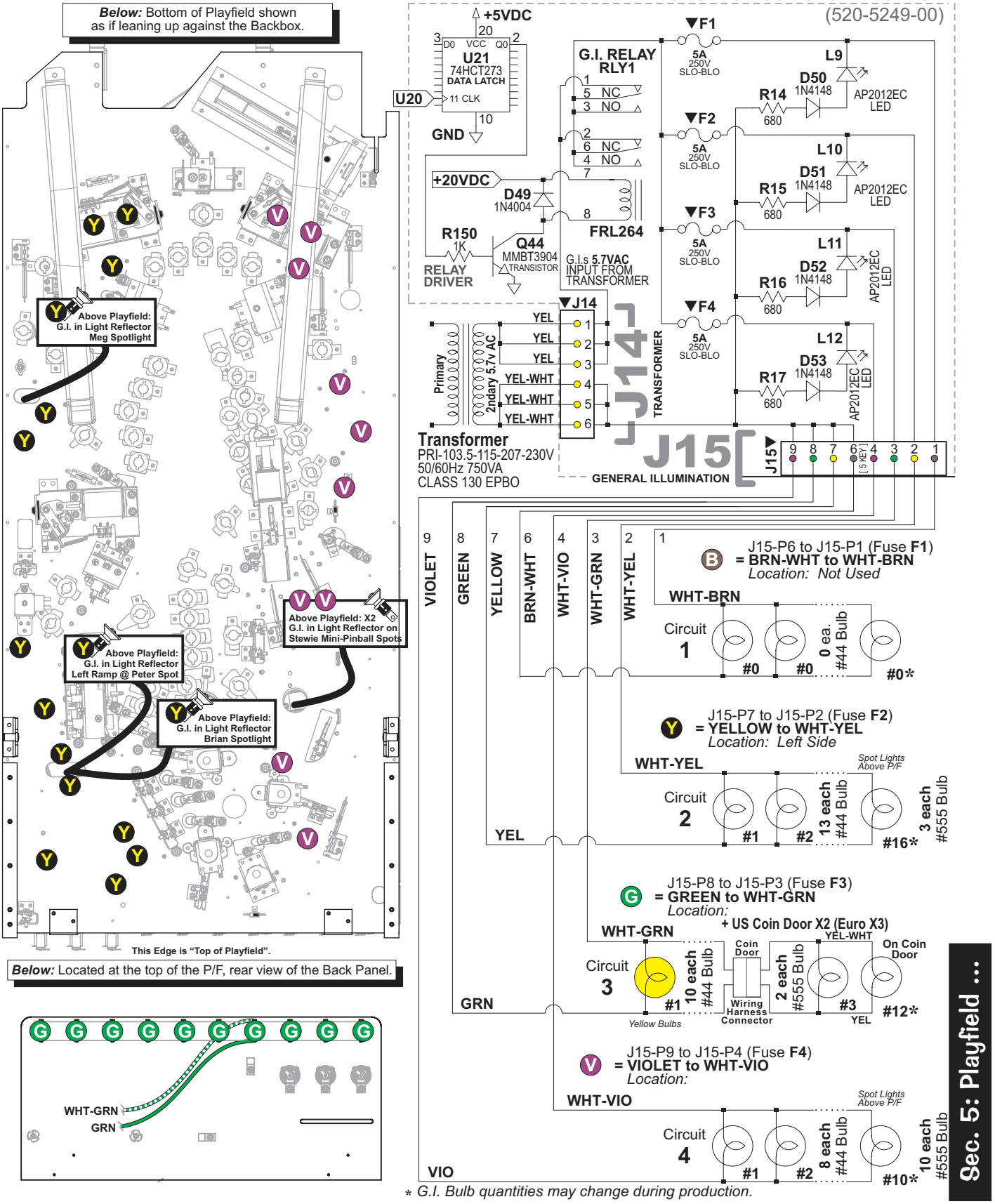

* G.I. Bulb quantities may change during production.

Sec. 5: Playfield ...

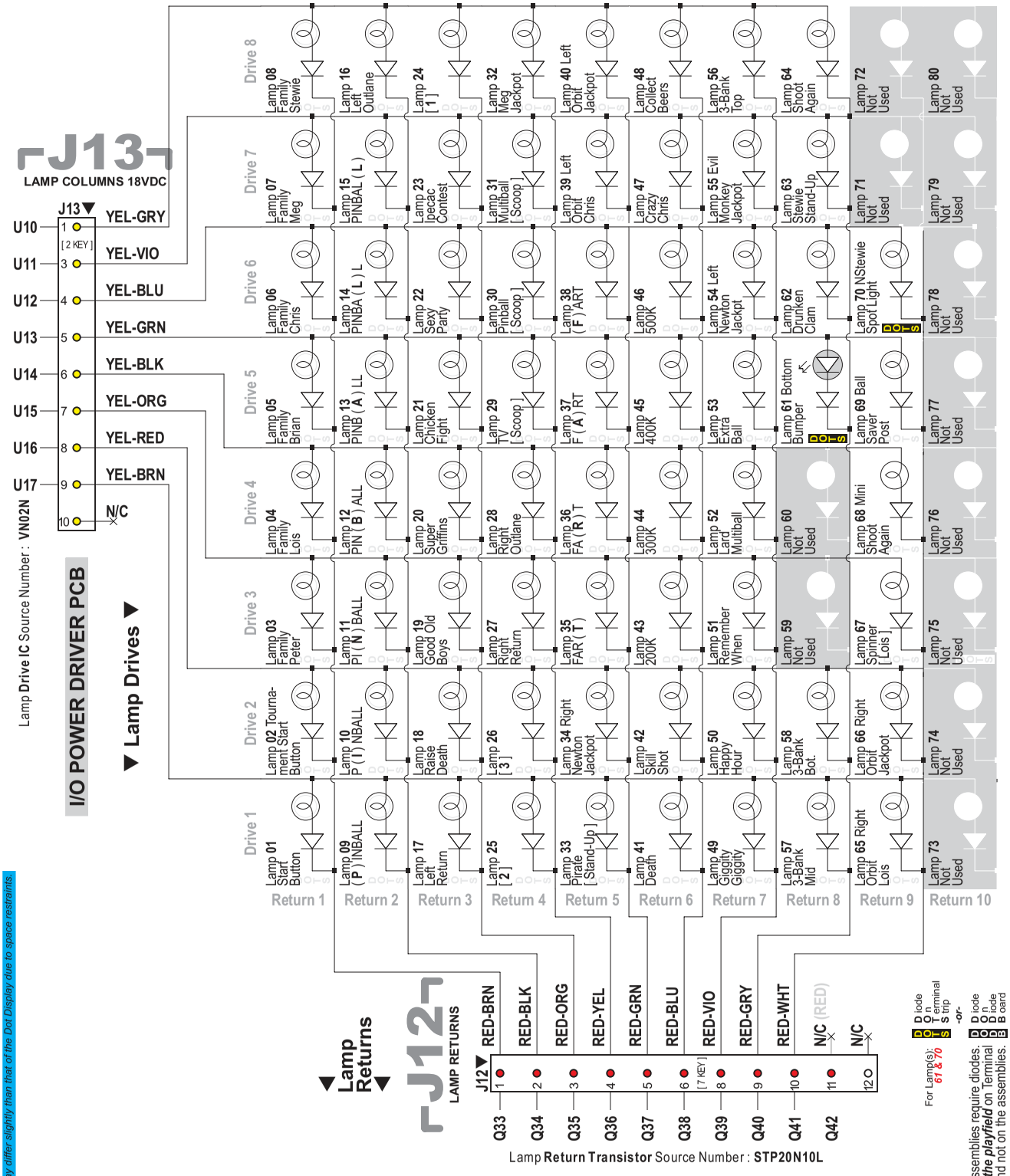
J13
LAMP COLUMNS 18VDC
J13
U10 1 YEL-GRY
[2 KEY]
U11 3 YEL-VIO
U12 4 YEL-BLU
U13 5 YEL-GRN
U14 6 YEL-BLK
U15 7 YEL-ORG
U16 8 YEL-RED
U17 9 YEL-BRN
10 N/C
Lamp Drive IC Source Number : VN02N
I/O POWER DRIVER PCB
▼ Lamp Drives ▼
Drive 1
Drive 2
Drive 3
Drive 4
Drive 5
Drive 6
Drive 7
Drive 8
Lamp 01 Start Button
Lamp 02 Tourna-ment Start Button
Lamp 03 Family Peter
Lamp 04 Family Lois
Lamp 05 Family Brian
Lamp 06 Family Chris
Lamp 07 Family Meg
Lamp 08 Family Stewie
Lamp 09 (P) INBALL
Lamp 10 P (I) NBALL
Lamp 11 PI (N) BALL
Lamp 12 PIN (B) ALL
Lamp 13 PINB (A) LL
Lamp 14 PINBA (L) L
Lamp 15 PINBAL (L)
Lamp 16 Left Outlane
Lamp 17 Left Return
Lamp 18 Raise Death
Lamp 19 Good Old Boys
Lamp 20 Super Griffins
Lamp 21 Chicken Fight
Lamp 22 Sexy Party
Lamp 23 Ipecac Contest
Lamp 24 [1]
Lamp 25 [2]
Lamp 26 [3]
Lamp 27 Right Return
Lamp 28 Right Outlane
Lamp 29 TV [Scoop]
Lamp 30 Pinball [Scoop]
Lamp 31 Multiball [Scoop]
Lamp 32 Meg Jackpot
Lamp 33 Pirate [Stand-Up]
Lamp 34 Right Newton Jackpot
Lamp 35 FAR (T)
Lamp 36 FA (R) T
Lamp 37 F (A) RT
Lamp 38 (F) ART
Lamp 39 Left Orbit Chris
Lamp 40 Left Orbit Jackpot
Lamp 41 Death
Lamp 42 Skill Shot
Lamp 43 200K
Lamp 44 300K
Lamp 45 400K
Lamp 46 500K
Lamp 47 Crazy Chris
Lamp 48 Collect Beers
Lamp 49 Giggity Giggity
Lamp 50 Happy Hour
Lamp 51 Remember When
Lamp 52 Lard Multiball
Lamp 53 Extra Ball
Lamp 54 Left Newton Jackpot
Lamp 55 Evil Monkey Jackpot
Lamp 56 3-Bank Top
Lamp 57 3-Bank Mid
Lamp 58 3-Bank Bot.
Lamp 59 Not Used
Lamp 60 Not Used
Lamp 61 Bottom Bumper
Diode
Lamp 62 Drunken Clam
Lamp 63 Stewie Stand-Up
Lamp 64 Shoot Again
Lamp 65 Right Orbit Lois
Lamp 66 Right Orbit Jackpot
Lamp 67 Spinner [Lois]
Lamp 68 Mini Shoot Again
Lamp 69 Ball Saver Post
Diode
Lamp 70 NStewie Spot Light
Diode
Lamp 71 Not Used
Lamp 72 Not Used
Lamp 73 Not Used
Lamp 74 Not Used
Lamp 75 Not Used
Lamp 76 Not Used
Lamp 77 Not Used
Lamp 78 Not Used
Lamp 79 Not Used
Lamp 80 Not Used
Return 1
Return 2
Return 3
Return 4
Return 5
Return 6
Return 7
Return 8
Return 9
Return 10
▼ Lamp Returns ▼
J12
LAMP RETURNS
J12▼
1 RED-BRN
2 RED-BLK
3 RED-ORG
4 RED-YEL
5 RED-GRN
6 RED-BLU
[7 KEY]
8 RED-VIO
9 RED-GRY
10 RED-WHT
11 N/C (RED)
12 N/C
Q33
Q34
Q35
Q36
Q37
Q38
Q39
Q40
Q41
Q42
Lamp Return Transistor Source Number : STP20N10L
Diode On Terminal Strip
-or-
Diode On Diode Board
For Lamp(s): 61 & 70
Note: All Switch, Lamp & Coil assemblies require diodes. Some diodes are located under the playfield on Terminal Strips or Diode Boards and not on the assemblies.
Please Note: Switch & Lamp Descriptions may differ slightly than that of the Dot Display due to space restraints.

Please Note: *Terminal Strip(s), Diode Board(s) and/or Fuse Holder(s) locations shown, represent the general location (your game may differ slightly).*

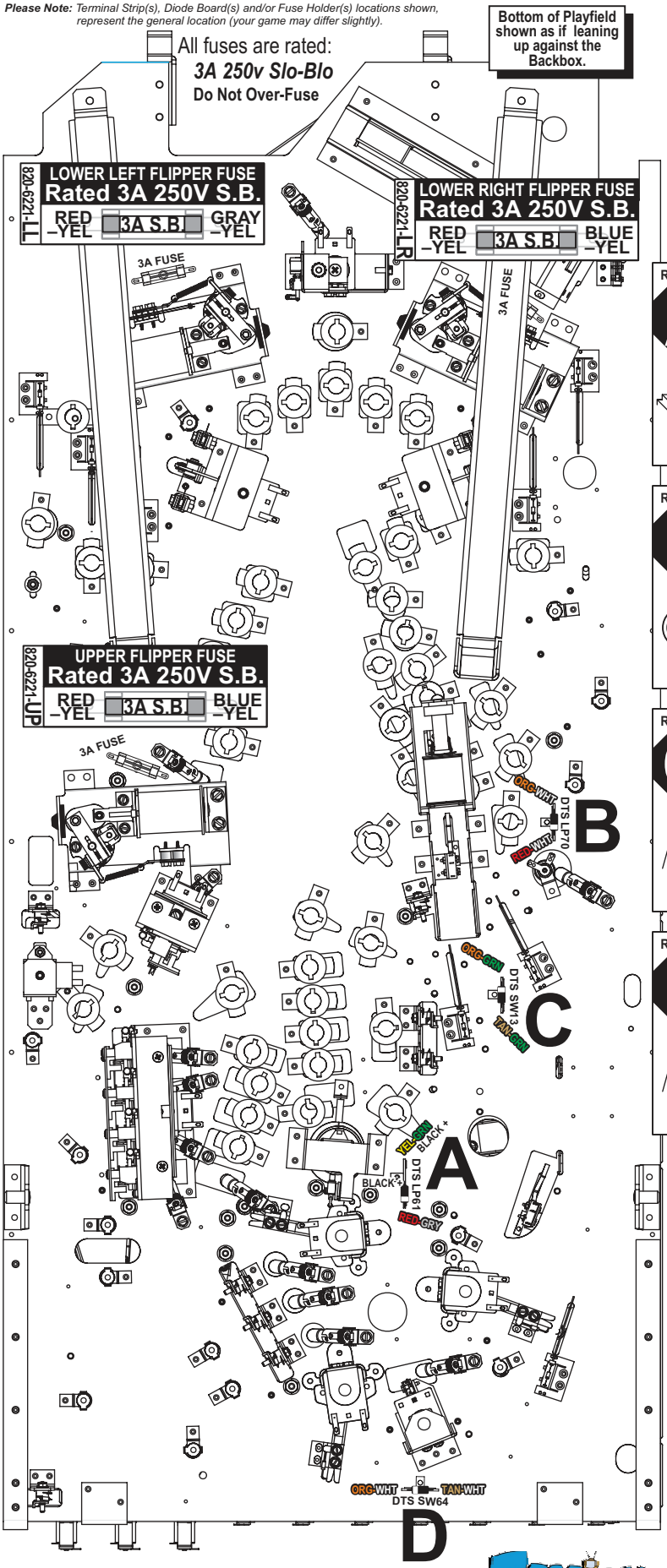

Explanation:

All Switches, Lamps & Coils require diodes. Coil diodes are located on the I/O Power Driver PCB *(in Backbox)*. Some diodes from switches *or* lamps are moved onto Terminal Strips (***located under the playfield)***. This is done where space constraints *or* excessive vibrations are present. *The Switch & Lamp Matrix Grids also note which Switch or Lamp has a diode on a Terminal Strip, noted by* ***DOTS*** *(**D**iode **O**n **T**erminal **S**trip).*

READ GAME MANUAL FOR MORE INFO! LOOK FOR INFO OR WARNING DECALS!

A **LAMP 61** 820-6221-93A
BOTTOM BUMPER
FAMILY GUY PINBALL

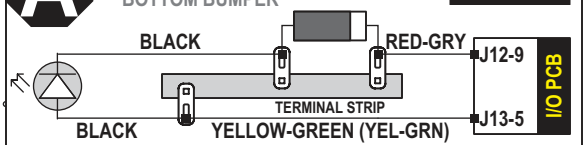

READ GAME MANUAL FOR MORE INFO! LOOK FOR INFO OR WARNING DECALS!

B **LAMP 70** 820-6221-93B
STEWIE SPOT LIGHT
FAMILY GUY PINBALL

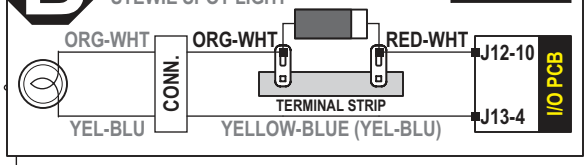

READ GAME MANUAL FOR MORE INFO! LOOK FOR INFO OR WARNING DECALS!

C **SWITCH 13** 820-6221-93C
SCOOP / TV EJECT
FAMILY GUY PINBALL

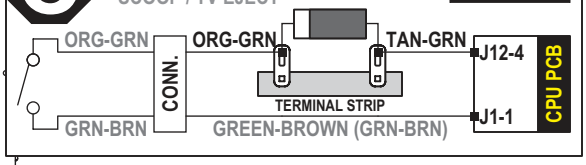

READ GAME MANUAL FOR MORE INFO! LOOK FOR INFO OR WARNING DECALS!

D **SWITCH 64** 820-6221-93D
CLAM EJECT
FAMILY GUY PINBALL

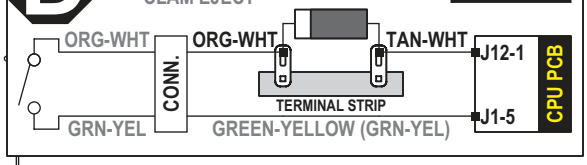

*See Sec. **4**, Chp. **1** (Pink Pages), Playfield Bottom – Misc. Parts and Brackets for Terminal Strips, Diodes, Fuses and Fuse Holders Part #s.*

3- Flipper Circuit Wiring Diagram (*Upper Mini-Playfield Flippers operate with lower button presses if programming allows.*)

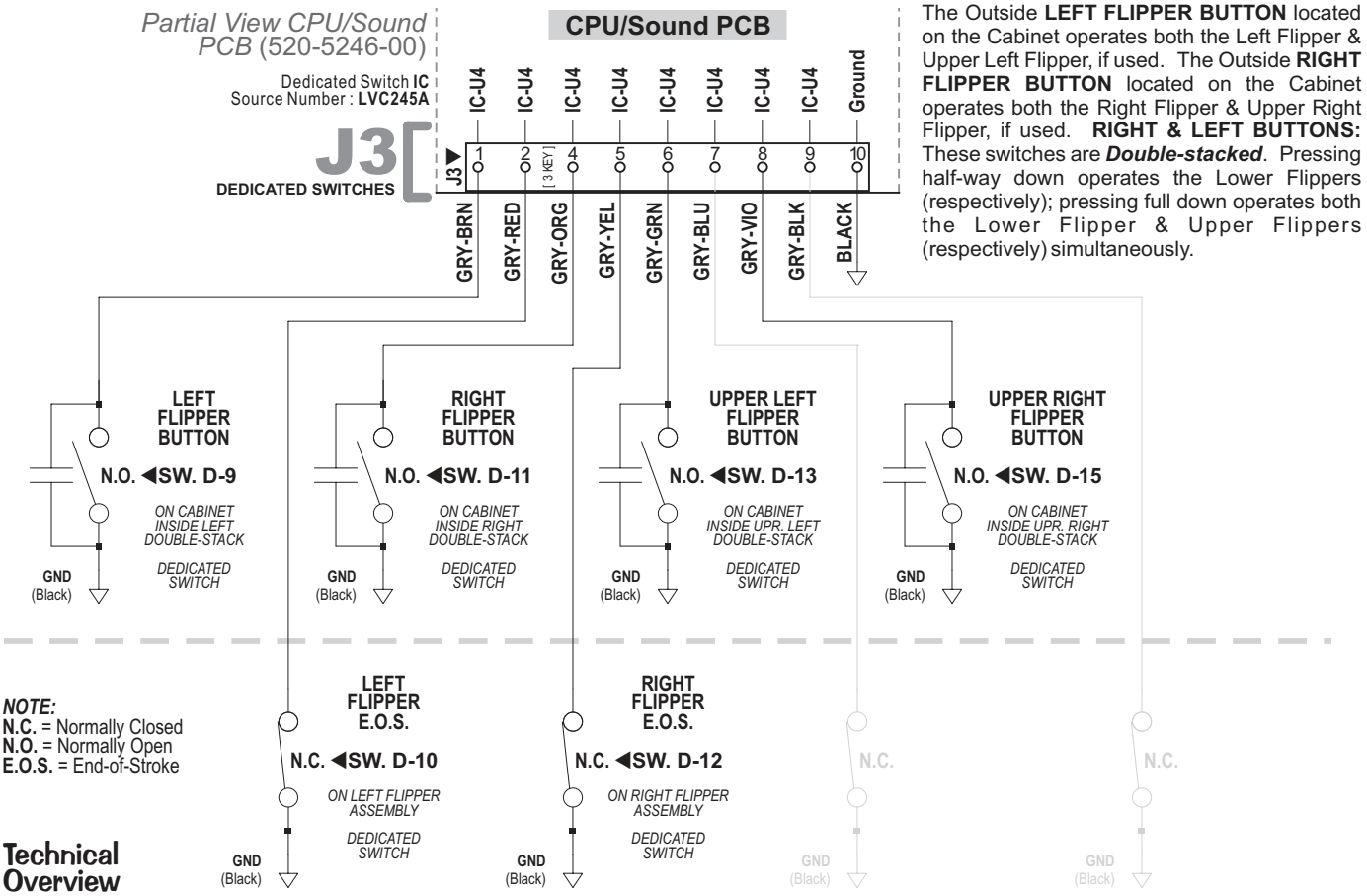

The Outside **LEFT FLIPPER BUTTON** located on the Cabinet operates both the Left Flipper & Upper Left Flipper, if used. The Outside **RIGHT FLIPPER BUTTON** located on the Cabinet operates both the Right Flipper & Upper Right Flipper, if used. **RIGHT & LEFT BUTTONS:** These switches are ***Double-stacked***. Pressing half-way down operates the Lower Flippers (respectively); pressing full down operates both the Lower Flipper & Upper Flippers (respectively) simultaneously.

NOTE:
N.C. = Normally Closed
N.O. = Normally Open
E.O.S. = End-of-Stroke

Technical Overview

Our ***Flipper System*** uses one supply voltage (+50VDC) for both ***kick*** & ***hold***. Once the **Game CPU** detects a Flipper Cabinet Switch closure *(during game play)* it applies a 40*msec* pulse to the gate of the Flipper Drive Transistor (STP22NE10L). If it continues to detect a Flipper Cabinet Switch closure *(the player holding the button in)* it will continue to pulse the flipper drive transistor 1*msec* every 12*msecs* for the duration of the hold cycle.

The **E.O.S.** (End-Of-Stroke) **Switch** serves the same function as before as it prevents foldback when the player has the flipper energized to capture balls. The **E.O.S. Dedicated Switch** is a normally closed switch which opens approximately 1/16" when the flipper is energized. The **Game CPU** will detect a switch closure if the flipper bat is forced back by a high velocity shot or rebound on the playfield and will apply another 40*msec* pulse of 50VDC to the coil.

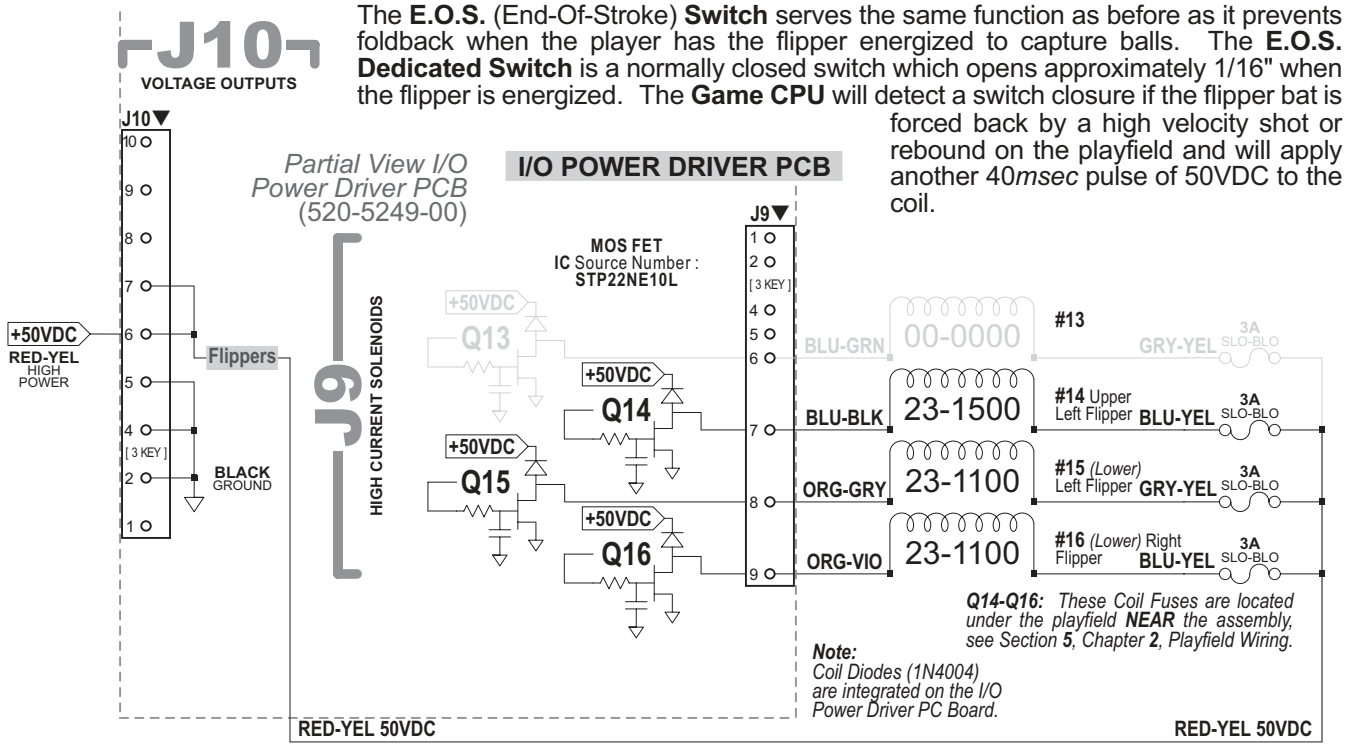

Q14-Q16: *These Coil Fuses are located under the playfield **NEAR** the assembly, see Section **5**, Chapter **2**, Playfield Wiring.*

Note:
Coil Diodes (1N4004) are integrated on the I/O Power Driver PC Board.

FAMILY GUY
shoot again
75¢=
x1
SUPER VALUE
$2.00=
x3

Cabinet and Coin Door Wiring

Transformer Power Wiring Diagram

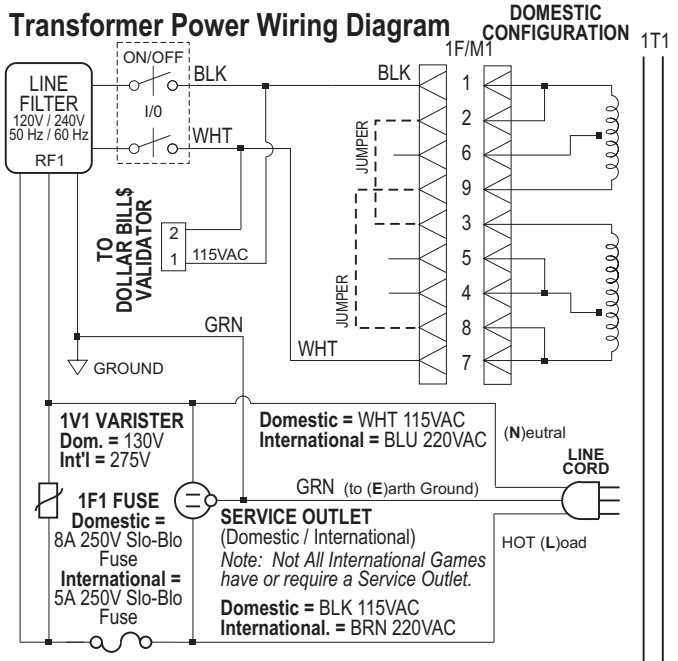

▼ Jumper Configurations for Voltage Variations ▼

N. AMERICA LINE VOLTAGE
110VAC / 120VAC

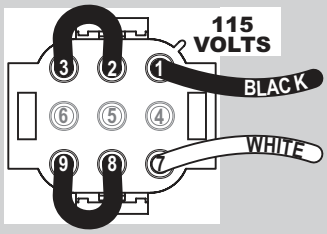

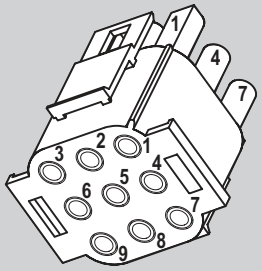

*9-PIN CONN. ▲ **BACK VIEW***
black & white wires from the POWER BOX, cabinet bottom.

INTERNATIONAL *or*
HIGH LINE VOLTAGE
230VAC / 218VAC / 206VAC

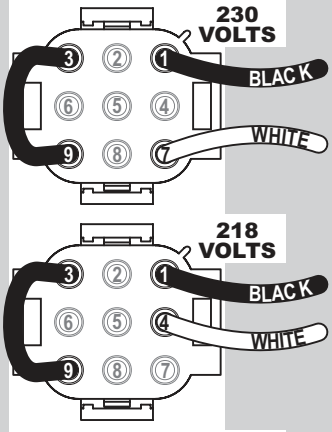

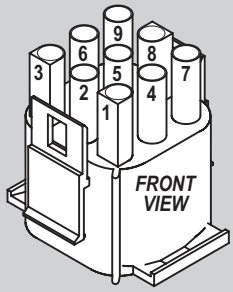

JAPAN *or*
LOW LINE VOLTAGE
100VAC / 105VAC

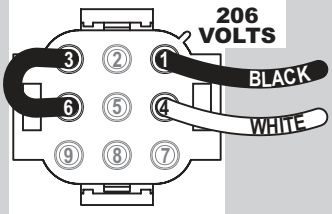

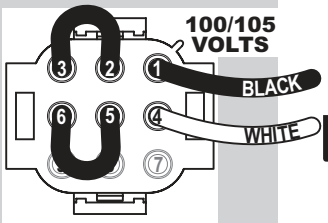

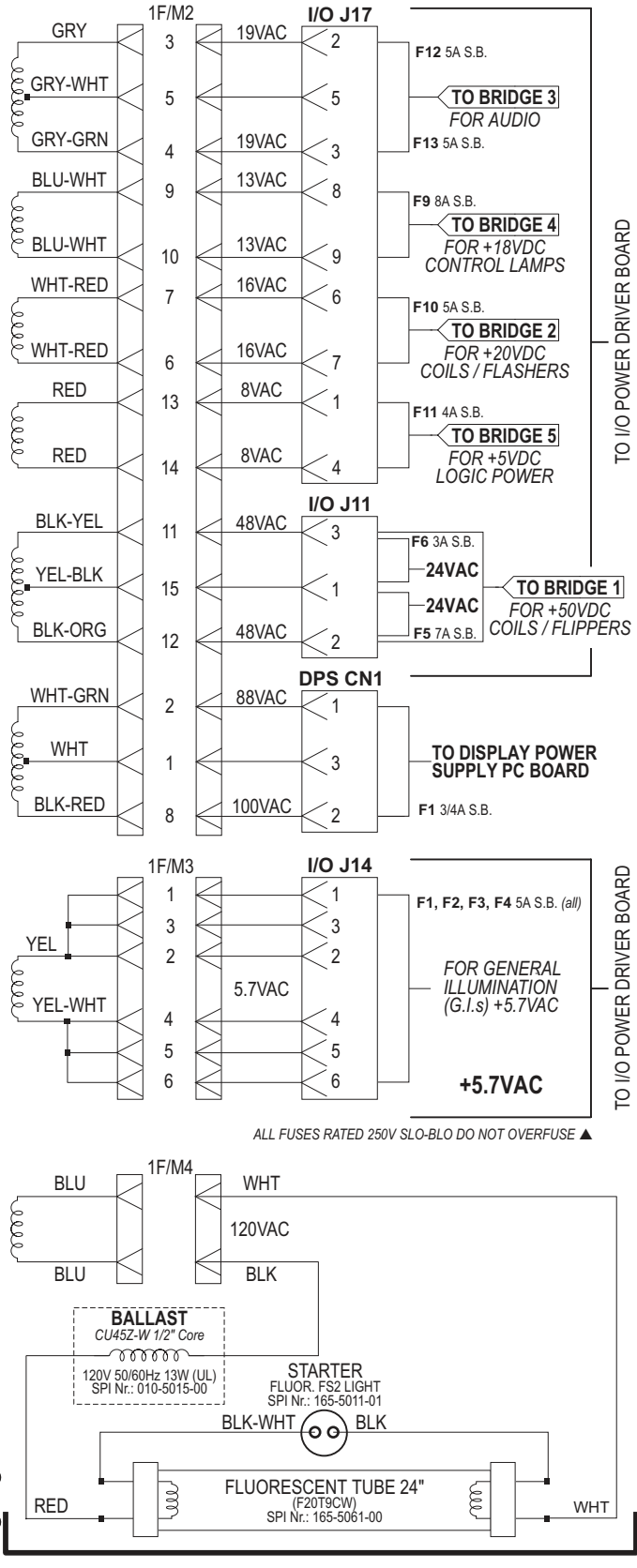

FLUORESCENT TUBE, STARTER & BALLAST
LOCATED IN THE BACKBOX

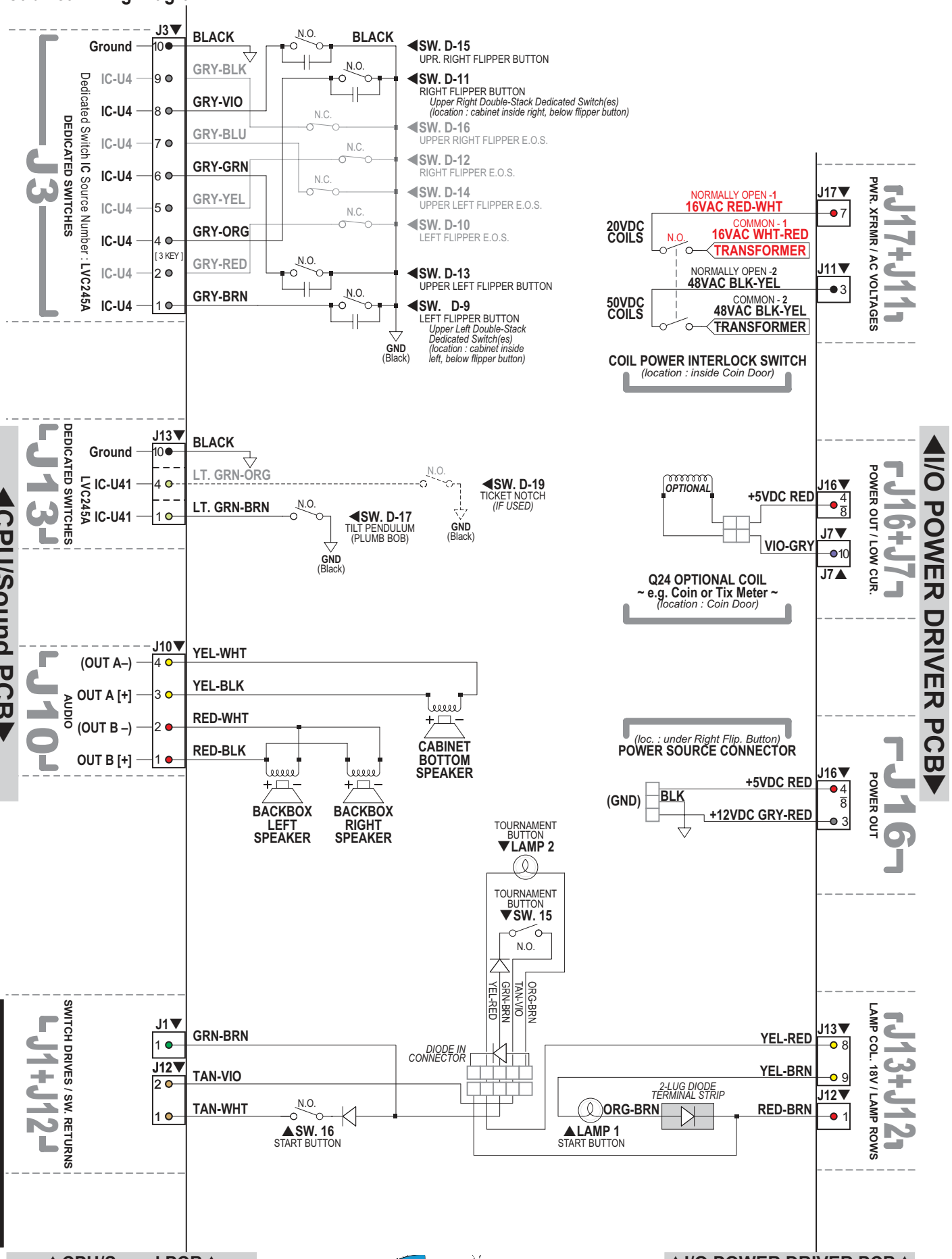
J3
Ground
IC-U4
Dedicated Switch IC Source Number : LVC245A
DEDICATED SWITCHES
[3 KEY]
BLACK
GRY-BLK
GRY-VIO
GRY-BLU
GRY-GRN
GRY-YEL
GRY-ORG
GRY-RED
GRY-BRN
N.O.
N.C.
SW. D-15
UPR. RIGHT FLIPPER BUTTON
SW. D-11
RIGHT FLIPPER BUTTON
Upper Right Double-Stack Dedicated Switch(es)
(location : cabinet inside right, below flipper button)
SW. D-16
UPPER RIGHT FLIPPER E.O.S.
SW. D-12
RIGHT FLIPPER E.O.S.
SW. D-14
UPPER LEFT FLIPPER E.O.S.
SW. D-10
LEFT FLIPPER E.O.S.
SW. D-13
UPPER LEFT FLIPPER BUTTON
SW. D-9
LEFT FLIPPER BUTTON
Upper Left Double-Stack Dedicated Switch(es)
(location : cabinet inside left, below flipper button)
GND (Black)
J17+J11
PWR. XFRMR / AC VOLTAGES
NORMALLY OPEN -1
16VAC RED-WHT
20VDC COILS
COMMON - 1
16VAC WHT-RED
TRANSFORMER
NORMALLY OPEN -2
48VAC BLK-YEL
50VDC COILS
COMMON - 2
48VAC BLK-YEL
TRANSFORMER
COIL POWER INTERLOCK SWITCH
(location : inside Coin Door)
I/O POWER DRIVER PCB
CPU/Sound PCB
J13
DEDICATED SWITCHES
LVC245A
LT. GRN-ORG
LT. GRN-BRN
SW. D-19
TICKET NOTCH
(IF USED)
SW. D-17
TILT PENDULUM
(PLUMB BOB)
J16+J7
POWER OUT / LOW CUR.
OPTIONAL
+5VDC RED
VIO-GRY
Q24 OPTIONAL COIL
~ e.g. Coin or Tix Meter ~
(location : Coin Door)
J10
AUDIO
(OUT A–)
OUT A [+]
(OUT B –)
OUT B [+]
YEL-WHT
YEL-BLK
RED-WHT
RED-BLK
CABINET BOTTOM SPEAKER
BACKBOX LEFT SPEAKER
BACKBOX RIGHT SPEAKER
(loc. : under Right Flip. Button)
POWER SOURCE CONNECTOR
(GND)
BLK
+5VDC RED
+12VDC GRY-RED
J16
POWER OUT
TOURNAMENT BUTTON
LAMP 2
TOURNAMENT BUTTON
SW. 15
N.O.
YEL-RED
GRN-BRN
TAN-VIO
ORG-BRN
DIODE IN CONNECTOR
J1+J12
SWITCH DRIVES / SW. RETURNS
J1
J12
GRN-BRN
TAN-VIO
TAN-WHT
SW. 16
START BUTTON
2-LUG DIODE TERMINAL STRIP
ORG-BRN
LAMP 1
START BUTTON
YEL-RED
YEL-BRN
RED-BRN
J13+J12
LAMP COL. 18V / LAMP ROWS
Sec. 5: Cab. & Coin
CPU/Sound PCB
I/O POWER DRIVER PCB

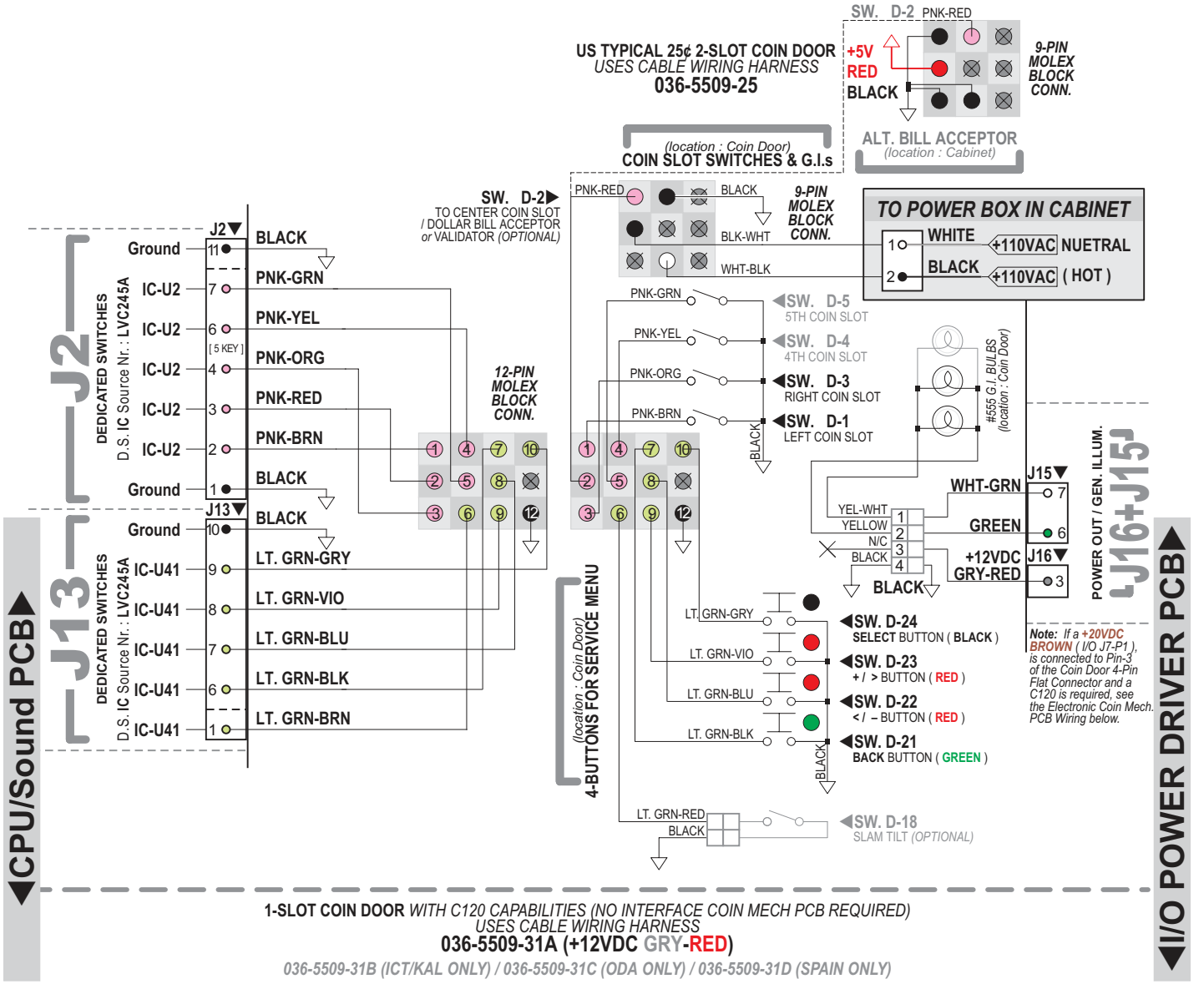

1-SLOT COIN DOOR *WITH C120 CAPABILITIES (NO INTERFACE COIN MECH PCB REQUIRED)*
USES CABLE WIRING HARNESS
036-5509-31A (+12VDC GRY-RED)

036-5509-31B (ICT/KAL ONLY) / 036-5509-31C (ODA ONLY) / 036-5509-31D (SPAIN ONLY)

NON-US NON-C120 2-SLOT COIN DOOR
USES CABLE WIRING HARNESS
036-5509-32

NON-US NON-C120 3-SLOT COIN DOOR
USES CABLE WIRING HARNESS
036-5509-33

IF YOUR GAME HAS AN ELECTRONIC COIN MECH. INTERFACE PC BOARD (520-5193-00):

1-SLOT COIN DOOR *USE WITH C120 CAPABILITIES REQUIRING PCB 520-5193-00*
USES CABLE WIRING HARNESS
036-5509-31 (S.A.M. SYSTEM)

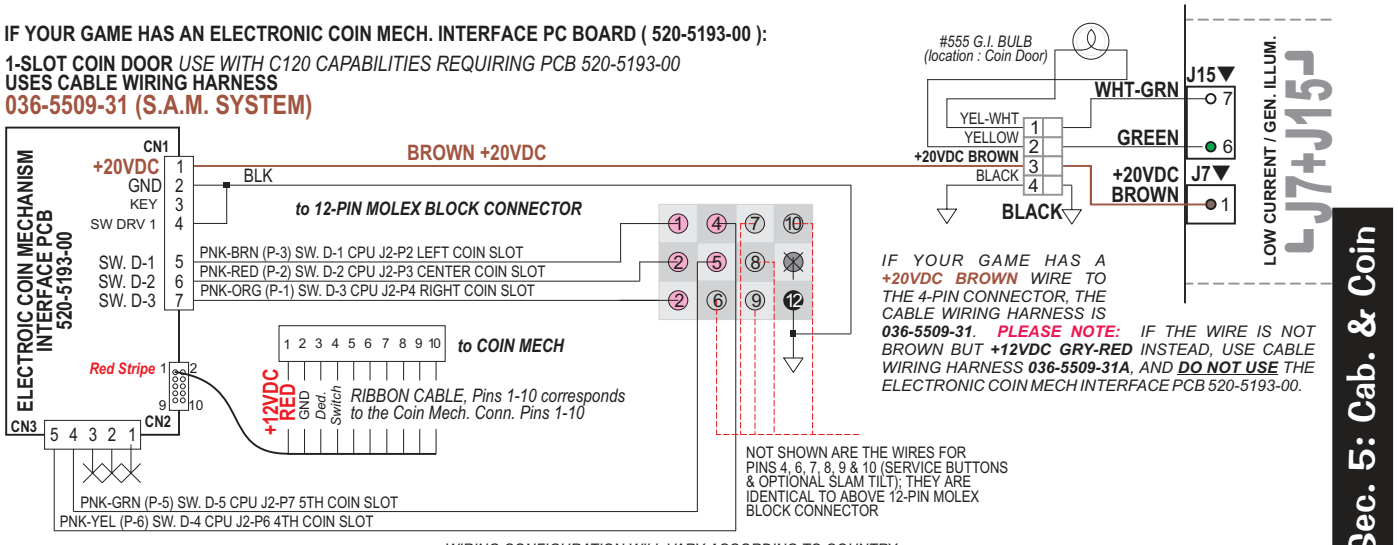

*IF YOUR GAME HAS A **+20VDC BROWN** WIRE TO THE 4-PIN CONNECTOR, THE CABLE WIRING HARNESS IS **036-5509-31**. **PLEASE NOTE:** IF THE WIRE IS NOT BROWN BUT **+12VDC GRY-RED** INSTEAD, USE CABLE WIRING HARNESS **036-5509-31A**, AND **DO NOT USE** THE ELECTRONIC COIN MECH INTERFACE PCB 520-5193-00.*

~ WIRING CONFIGURATION WILL VARY ACCORDING TO COUNTRY ~

Printed Circuit Boards (PCBs)

Trough Up-Kicker Dual OPTO PCBs (515-0173-00 & 515-0174-00) Theory of Op. & Schematic

As light from the **Transmitter LED1** falls on the **Receiver LED1**, it generates a Positive Bias Voltage (0.7v to 1.5v) which is applied to the **Gate** (**G**) of **Q1 (Fet 2N5460)** turning **Q1** off. When **Q1** is held off, no current flows through **Q2**'s **(2N3906) Base** (**B**). With no *base current,* **Q2** is off and acts as an *OPEN SWITCH*. When the light is interrupted *(BLOCKED)* **R1** (Rec. Bd.) bleeds the gate voltage off of **Q1** allowing it to conduct, switching **Q2** on, which acts as a *CLOSED SWITCH*. The **LED2 (Trans/Rec) Circuit** operates identical as the **LED1 Circuit**.

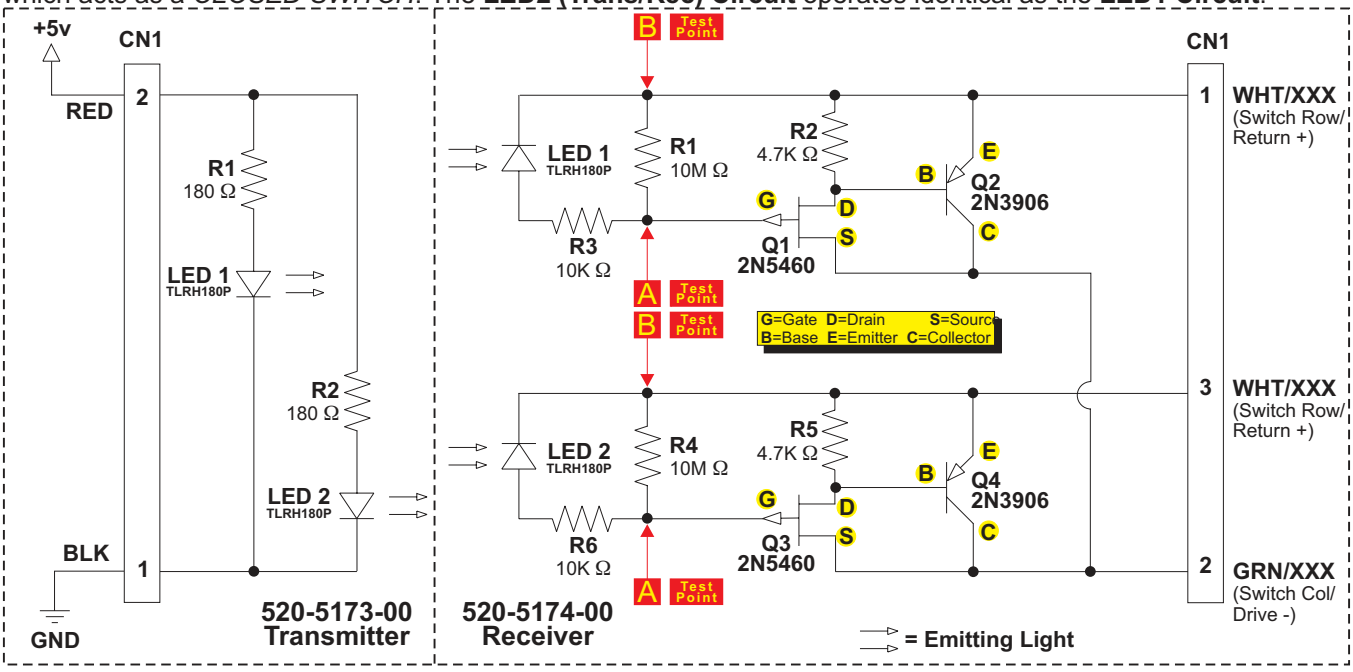

Trough Up-Kicker Dual OPTO PCBs (515-0173-00 & 515-0174-00) Component Layout & Parts

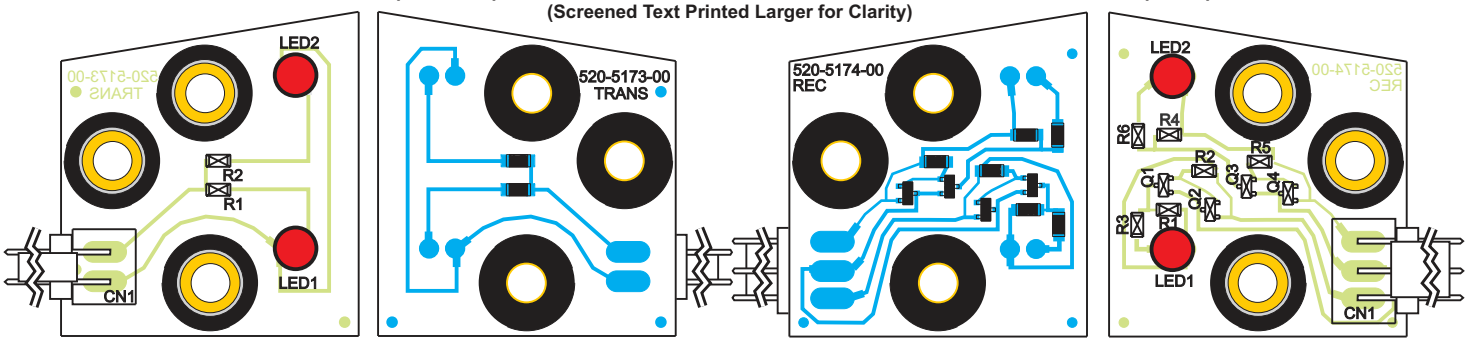

ITEM	QTY	PART NUMBER	REF-DESIGNATOR	DESCRIPTION
A+C & D	**1**	**515-0173-00**	**Dual-OPTO Transmitter PCB Assembly** *(Item **A** PCB + Items **C & D**)*	
A	**1**	**520-5173-00**	**Dual-OPTO Transmitter PCB**	*(includes Items **A-1 – A-3**)*
A-1	1	045-5111-02	CN1	2X, .156" Rt. Angle (26-60-5020) Conn.
A-2	**2**	**165-5052-00**	**LED1, LED2**	**LED TLRH180P (Ultra Bright Red)**
A-3	2	121-5067-00	R1, R2	180 Ω Resistor SMT, 1/8W (CRCW)
B+C & D	**1**	**515-0174-00**	**Dual-OPTO Receiver PCB Assembly** *(Item **B** PCB + Items **C & D**)*	
B	**1**	**520-5174-00**	**Dual-OPTO Receiver PCB**	*(includes Items **B-1 – B-7**)*
B-1	1	045-5111-03	CN1	3X, .156" Right Angle (26-60-5030) Conn.
B-2	**2**	**165-5052-00**	**LED1, LED2**	**LED TLRH180P (Ultra Bright Red)**
B-3	2	110-5006-00	Q1, Q3	2N5460, Transistor (P-FET SOT-23)
B-4	2	110-0086-00	Q2, Q4	**2N3906**, Transistor
B-5	2	121-5082-00	R1, R4	10M Ω Resistor SMT, 1/8W (CRCW)
B-6	2	121-5083-00	R2, R5	4.7K Ω Resistor SMT, 1/8W (CRCW)
B-7	2	121-5011-00	R3, R6	10K Ω Resistor SMT, 1/8W (CRCW)
C	3/per	530-5308-02		OPTO PCB Brass Tube Spacer
D	3/per	545-5518-00		OPTO PCB Rubber Grommet

Replacement Part:
LED TLRH180P
(T1-3/4 GaAlAs)
SPI Part Nº:
165-5052-00

OPTO Troubleshooting

1. Volt Meter Test (indicates normal operating condition):

A. **OPEN OPTO** (Light Falling on LED) = *SWITCH OPEN*. Place meter leads across points **A** and **B** on the **LED1 Circuit** *(Refer to Schematic Drawing on previous page, 520-5174-00 Receiver Side).* It should read approximately 0.8 - 1.2v DC. The **LED2 Circuit** operates the same.

B. **CLOSED OPTO** (Light Blocked) = *SWITCH CLOSED*. Place meter leads across points **A** and **B** on the **LED1 Circuit** *(Refer to Schematic Drawing on previous page, 520-5174-00 Receiver Side).* It should read approximately 0.0 - 0.1v DC. The **LED2 Circuit** operates the same.

2. Oscilloscope Test (indicates normal operating condition):

Fig. A

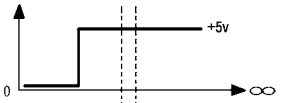

Fig. B

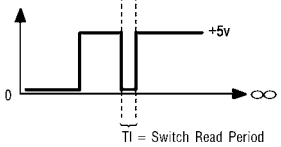

A. **OPEN OPTO** (Light Falling on LED) = *SWITCH OPEN*. Place Scope lead at **Pin-1** of OPTO Rec. Board with Scope Grounded (see Schematic). The Scope should display a **STEADY +5v** as shown in **Fig. A**, Wave Form Diagram.

B. **CLOSED OPTO** (Light Blocked) = *SWITCH CLOSED*. Place Scope lead at **Pin-1** of OPTO Rec. Board with Scope Grounded (see Schematic). The Scope should display a **PULSE STREAM** indicating **Q2** has switched "On" as shown in **Fig. B**, Wave Form Diagram. This is your Switch Drive Pulse.

3. Bench Test (See Fig. C):

Please Note: To perform this test you must use a spare 560Ω Pull-Up Resistor, SPI Nº: 121-5047-00

Disconnect the **OPTO Transmitter / Receiver Board** from the circuit. Connect one side of a 560Ω Pull-Up Resistor to **Pin-1** of the OPTO Receiver Bd. and the other side of the resistor to a 5v DC source. Connect **Pin-2** to GND. Connect a +5v DC source to **Pin-1** of the Transmitter & GND to **Pin-2**. Align with the Receiver OPTO approx. 3" distance. Using your Volt-Meter or an Oscilloscope, monitor **Pin-1** while *BLOCKING* and *UNBLOCKING* the ***BEAM*** from the Trans. The output will be approx. +5v DC when the ***BEAM IS NOT BLOCKED*** and approx. 0v when the ***BEAM IS BLOCKED.***

Fig. C

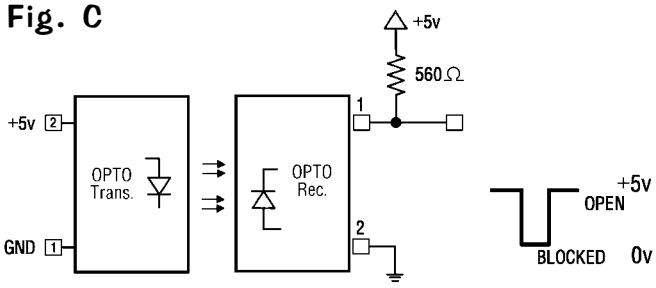

Trough Dual OPTO Boards Alignment / Test for LED1

When a working **OPTO** is installed and connected in a game, the transmitter should light *(LED1 lower & LED2 upper)* when the power is switched on. With the playfield in **Service Position #1** *(playfield lifted up in the half-way position resting on the Prop Rod or edge slide support brackets)* and the game on, the LED lights should show up as a **BRIGHT RED RINGS** through the back of the Receiver Board around the **Receivers LED1 & LED2** *(see **Fig. 1**)*. Testing only **LED1:** With the game in ***Switch Test Mode***, lifting the Trough Plunger with a fingertip should block the **BEAM** and cause the Switch Position to trigger *(see **Fig. 2**)*. View **Fig. 2a** & **2b** *(on the next page)* for a sectional view of the Light Path *(note alignment)* and what happens as a ball breaks the light beam.

Fig. 1

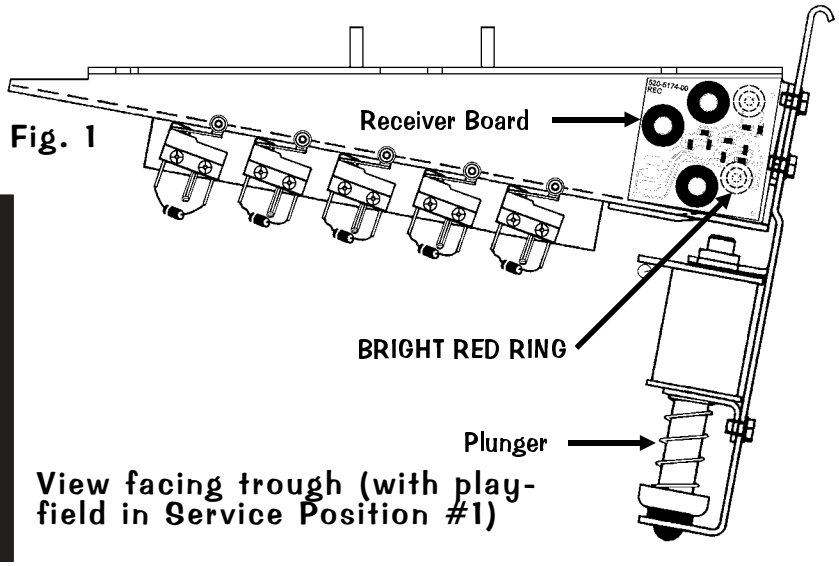

Fig. 2

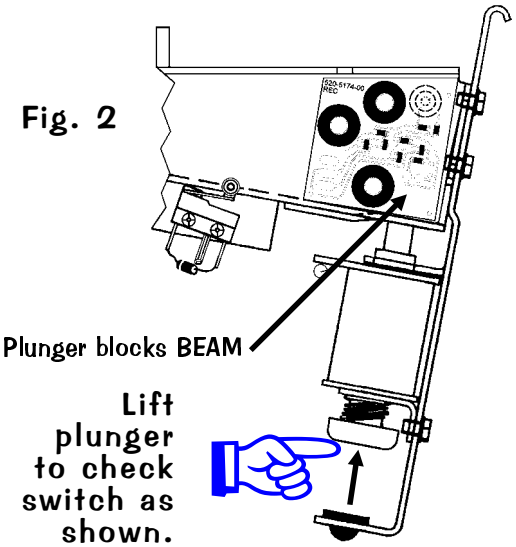

Sectional view from right (Fig. 2a & 2b)

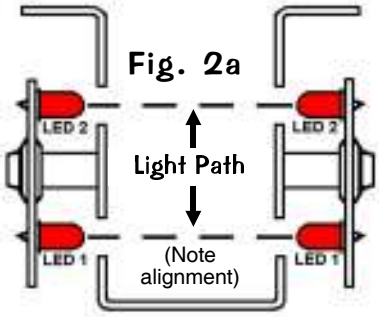

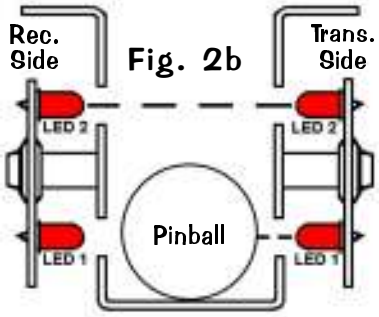

Trough Dual OPTO Boards Alignment / Test for LED2

When a working **OPTO** is installed and connected in a game, the transmitter should light *(LED1 lower & LED2 upper)* when the power is switched on. With the playfield in **Service Position #1** *(playfield lifted up and resting on the Playfield Support Slide Brackets)* and the game on, the LED lights should show up as a **BRIGHT RED RINGS** through the back of the Receiver Board around the **Receivers LED1 & LED2** *(see **Fig. 1**, previous page)*. Testing only **LED2:** *TO PERFORM THIS TEST, A PINBALL MUST BE IN THE BALL TROUGH.* With the game in ***Switch Test Mode***, lifting the Trough Plunger with a finger tip should block the **BEAM** on LED2 and cause the Switch Position to trigger *(see **Fig. 3**)*. View **Fig. 3a** & **3b** for a sectional view of the Light Path *(note alignment)* and what happens as a "double-stacked" ball scenario breaks the light beam.

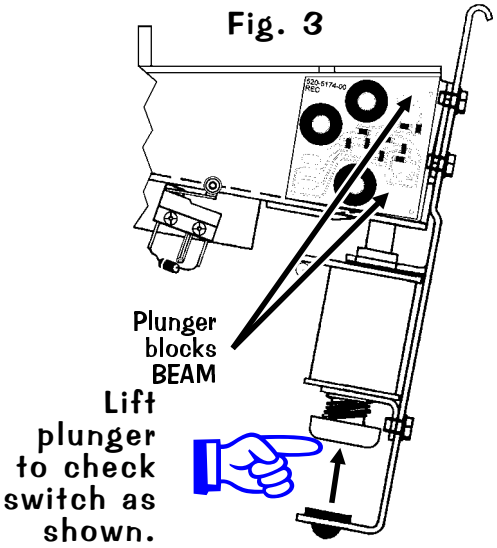

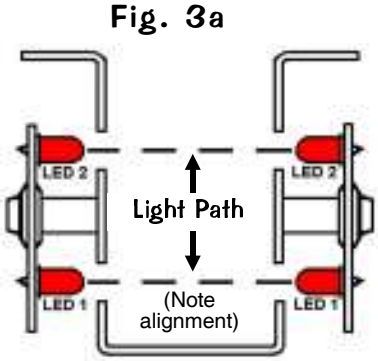

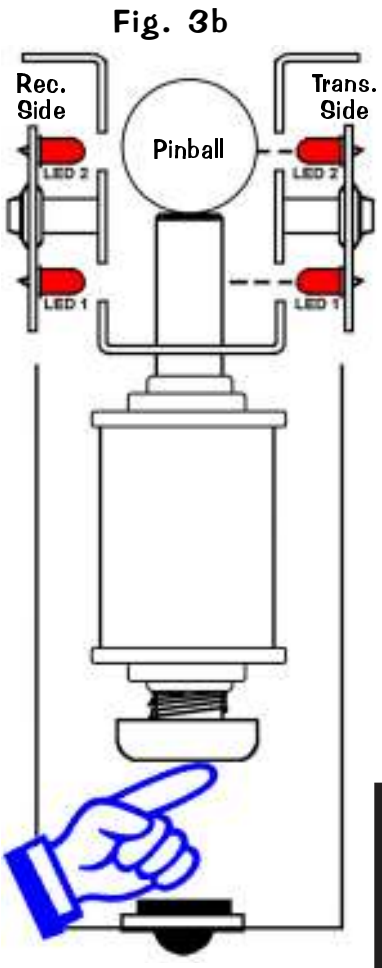

I M P O R T A N T

If replacement of ***LED*** *is required, insure that is* ***mounted correctly before and after soldering*** *(See **Fig. 4a** / **4b**).*

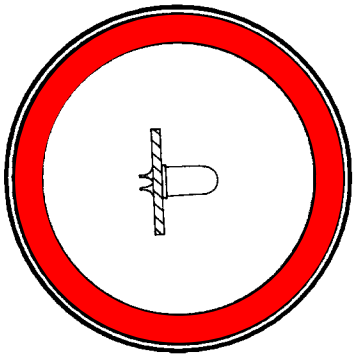

Fig. 4a
Correct Position

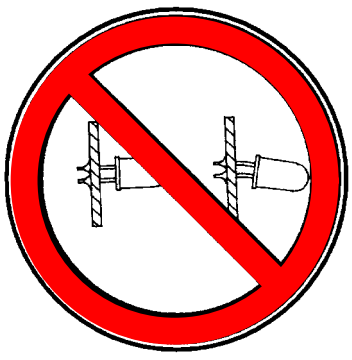

Fig. 4b
Incorrect Position

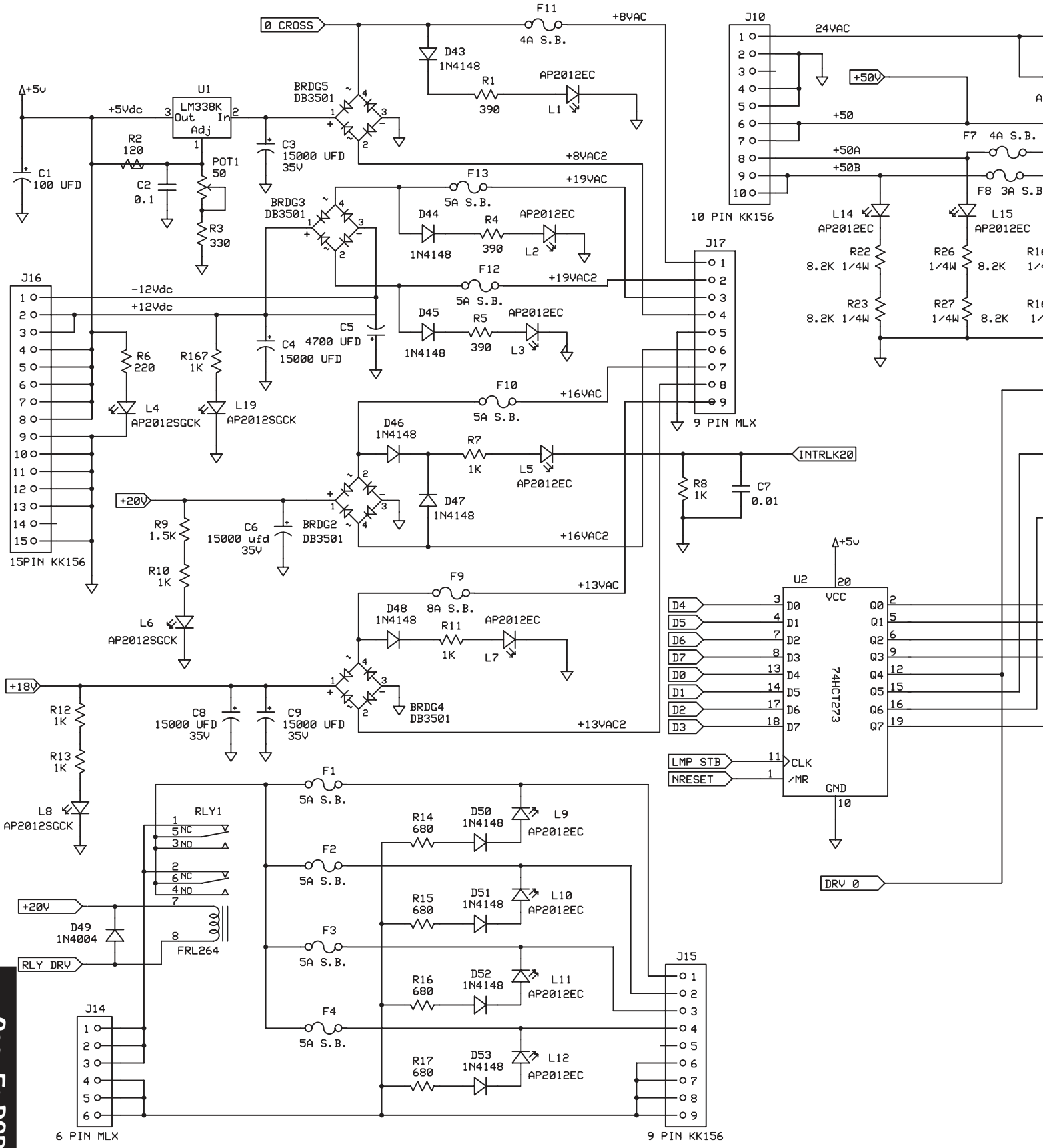
0 CROSS
F11
4A S.B.
+8VAC
D43
1N4148
R1
390
AP2012EC
L1
J10
24VAC
+50V
+50
+50A
+50B
F7 4A S.B.
F8 3A S.B.
10 PIN KK156
+5v
U1
LM338K
Out In
Adj
+5Vdc
R2
120
POT1
50
C1
100 UFD
C2
0.1
R3
330
C3
15000 UFD
35V
BRDG5
DB3501
+8VAC2
F13
5A S.B.
+19VAC
BRDG3
DB3501
D44
1N4148
R4
390
L2
AP2012EC
L14
AP2012EC
L15
AP2012EC
R22
8.2K 1/4W
R26
1/4W
8.2K
R23
8.2K 1/4W
R27
1/4W
8.2K
J17
9 PIN MLX
J16
15PIN KK156
-12Vdc
+12Vdc
F12
5A S.B.
+19VAC2
D45
1N4148
R5
390
L3
AP2012EC
C4 4700 UFD
15000 UFD
C5
R6
220
R167
1K
L4
AP2012SGCK
L19
AP2012SGCK
F10
5A S.B.
+16VAC
D46
1N4148
R7
1K
L5
AP2012EC
INTRLK20
R8
1K
C7
0.01
+20V
R9
1.5K
R10
1K
C6
15000 ufd
35V
BRDG2
DB3501
D47
1N4148
+16VAC2
L6
AP2012SGCK
F9
8A S.B.
+13VAC
D48
1N4148
R11
1K
L7
AP2012EC
+18V
R12
1K
R13
1K
L8
AP2012SGCK
C8
15000 UFD
35V
C9
15000 UFD
35V
BRDG4
DB3501
+13VAC2
U2
74HCT273
VCC
GND
D4
D5
D6
D7
D0
D1
D2
D3
Q0
Q1
Q2
Q3
Q4
Q5
Q6
Q7
CLK
/MR
LMP STB
NRESET
+5v
DRV 0
F1
5A S.B.
RLY1
F2
5A S.B.
F3
5A S.B.
F4
5A S.B.
R14
680
D50
1N4148
L9
AP2012EC
R15
680
D51
1N4148
L10
AP2012EC
R16
680
D52
1N4148
L11
AP2012EC
R17
680
D53
1N4148
L12
AP2012EC
+20V
D49
1N4004
FRL264
RLY DRV
J14
6 PIN MLX
J15
9 PIN KK156

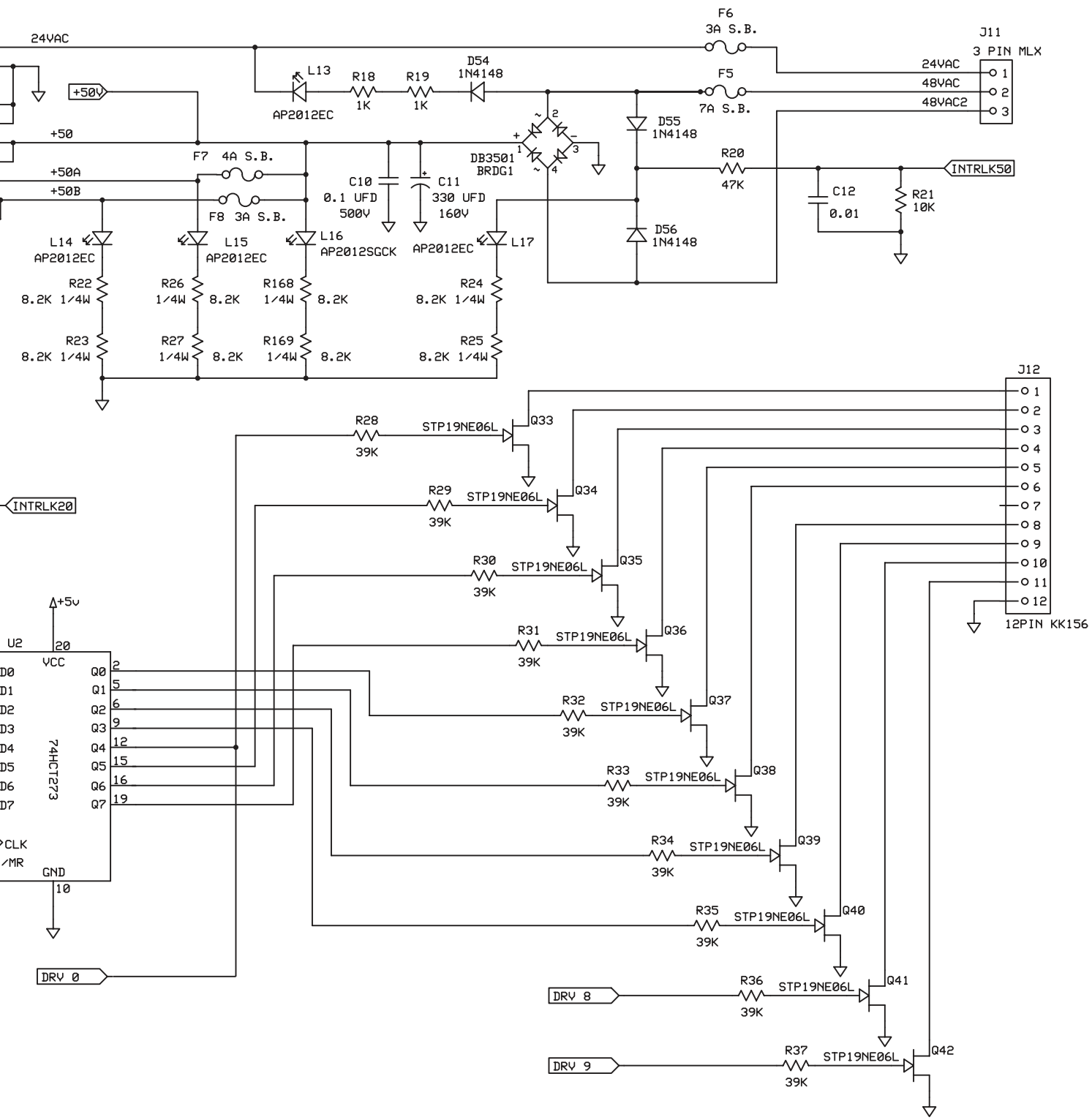

STERN PINBALL, INC.		
I/O POWER DRIVER BOARD		
520-5249-00	Rev A 5/20/2005	Page 1 of 4

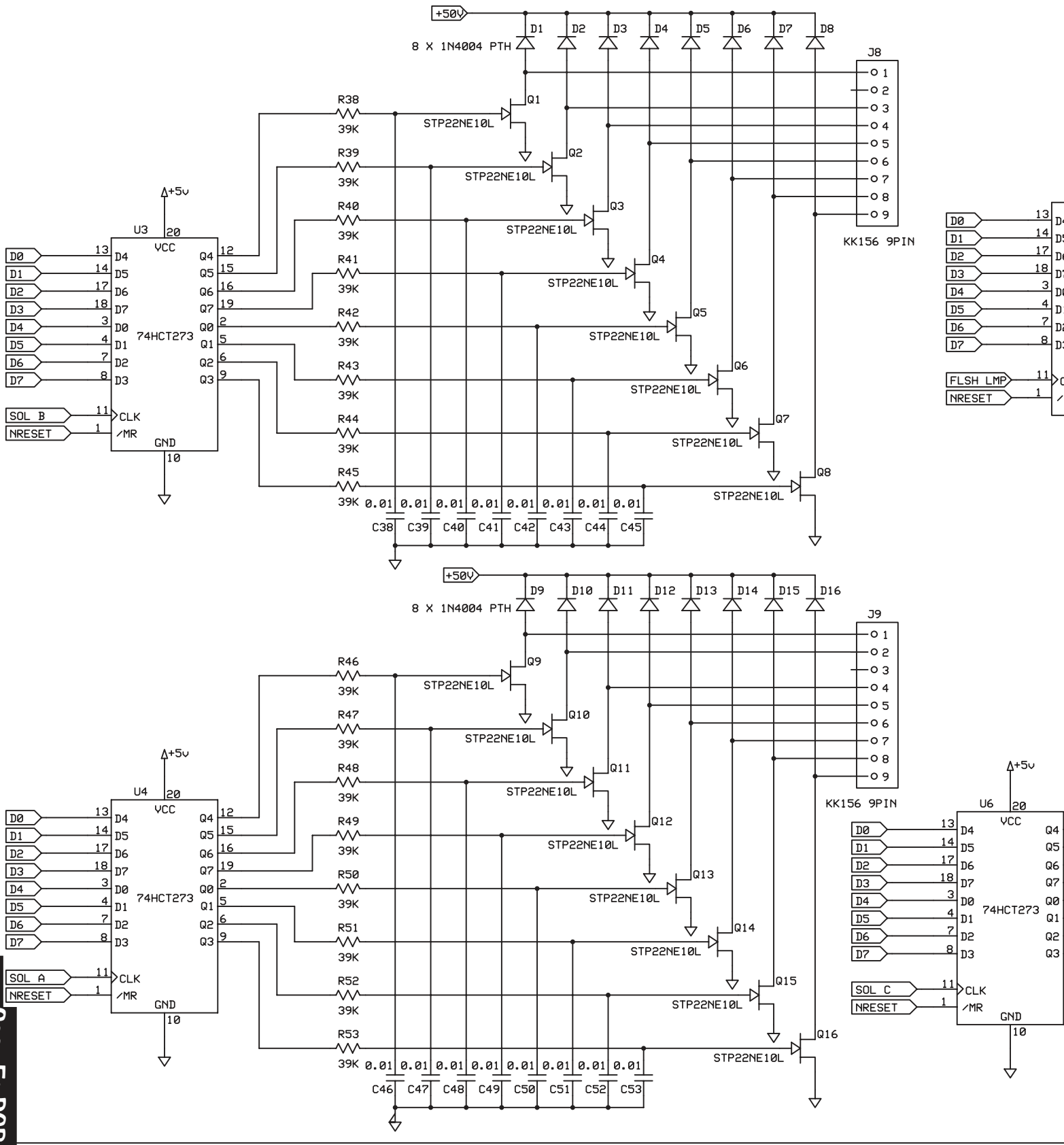
+50V
8 X 1N4004 PTH
D1 D2 D3 D4 D5 D6 D7 D8
J8
KK156 9PIN
R38 R39 R40 R41 R42 R43 R44 R45
39K
Q1 Q2 Q3 Q4 Q5 Q6 Q7 Q8
STP22NE10L
U3
74HCT273
VCC
GND
+5V
D0 D1 D2 D3 D4 D5 D6 D7
SOL B
NRESET
CLK
/MR
0.01
C38 C39 C40 C41 C42 C43 C44 C45
FLSH LMP
D9 D10 D11 D12 D13 D14 D15 D16
J9
R46 R47 R48 R49 R50 R51 R52 R53
Q9 Q10 Q11 Q12 Q13 Q14 Q15 Q16
U4
U6
SOL A
SOL C
C46 C47 C48 C49 C50 C51 C52 C53

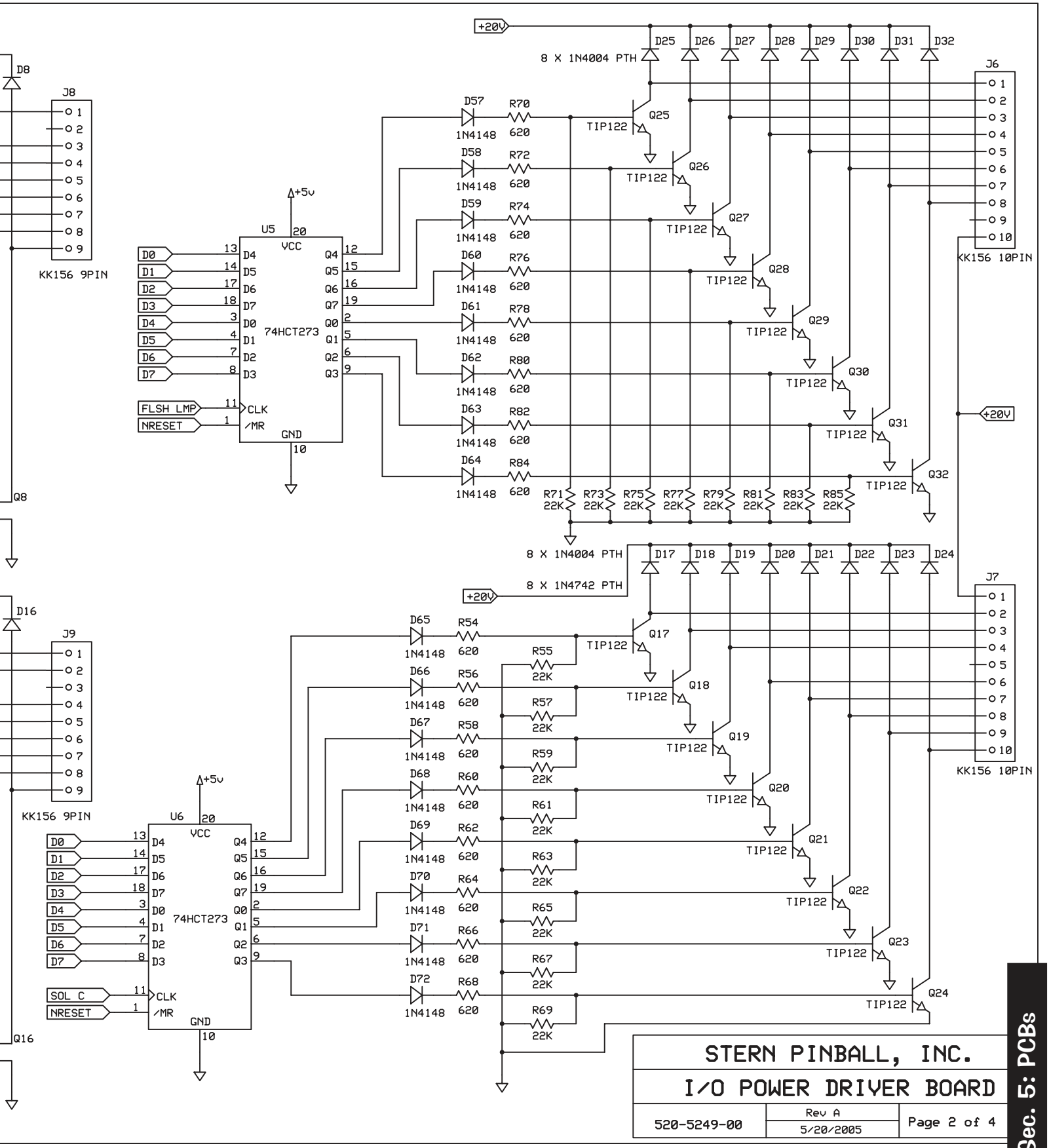

STERN PINBALL, INC.		
I/O POWER DRIVER BOARD		
520-5249-00	Rev A 5/20/2005	Page 2 of 4

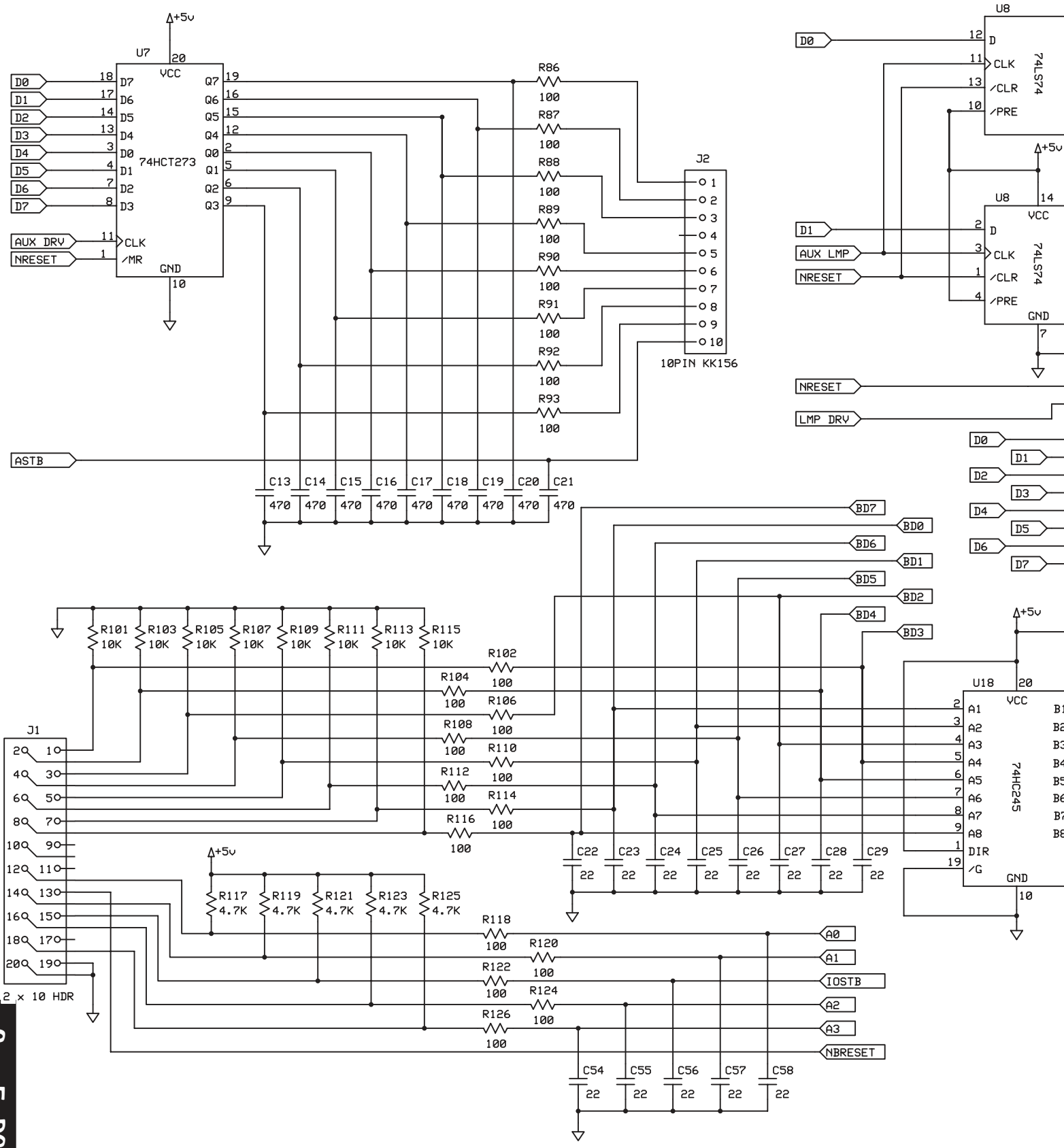
U7
74HCT273
VCC
GND
+5v
D0
D1
D2
D3
D4
D5
D6
D7
AUX DRV
NRESET
CLK
/MR
R86
R87
R88
R89
R90
R91
R92
R93
100
J2
10PIN KK156
ASTB
C13
C14
C15
C16
C17
C18
C19
C20
C21
470
U8
74LS74
/CLR
/PRE
AUX LMP
LMP DRV
BD7
BD0
BD6
BD1
BD5
BD2
BD4
BD3
R101
R103
R105
R107
R109
R111
R113
R115
10K
R102
R104
R106
R108
R110
R112
R114
R116
J1
2 x 10 HDR
U18
74HC245
A1
A2
A3
A4
A5
A6
A7
A8
DIR
/G
B1
B2
B3
B4
B5
B6
B7
B8
C22
C23
C24
C25
C26
C27
C28
C29
22
R117
R119
R121
R123
R125
4.7K
R118
R120
R122
R124
R126
A0
A1
IOSTB
A2
A3
NBRESET
C54
C55
C56
C57
C58

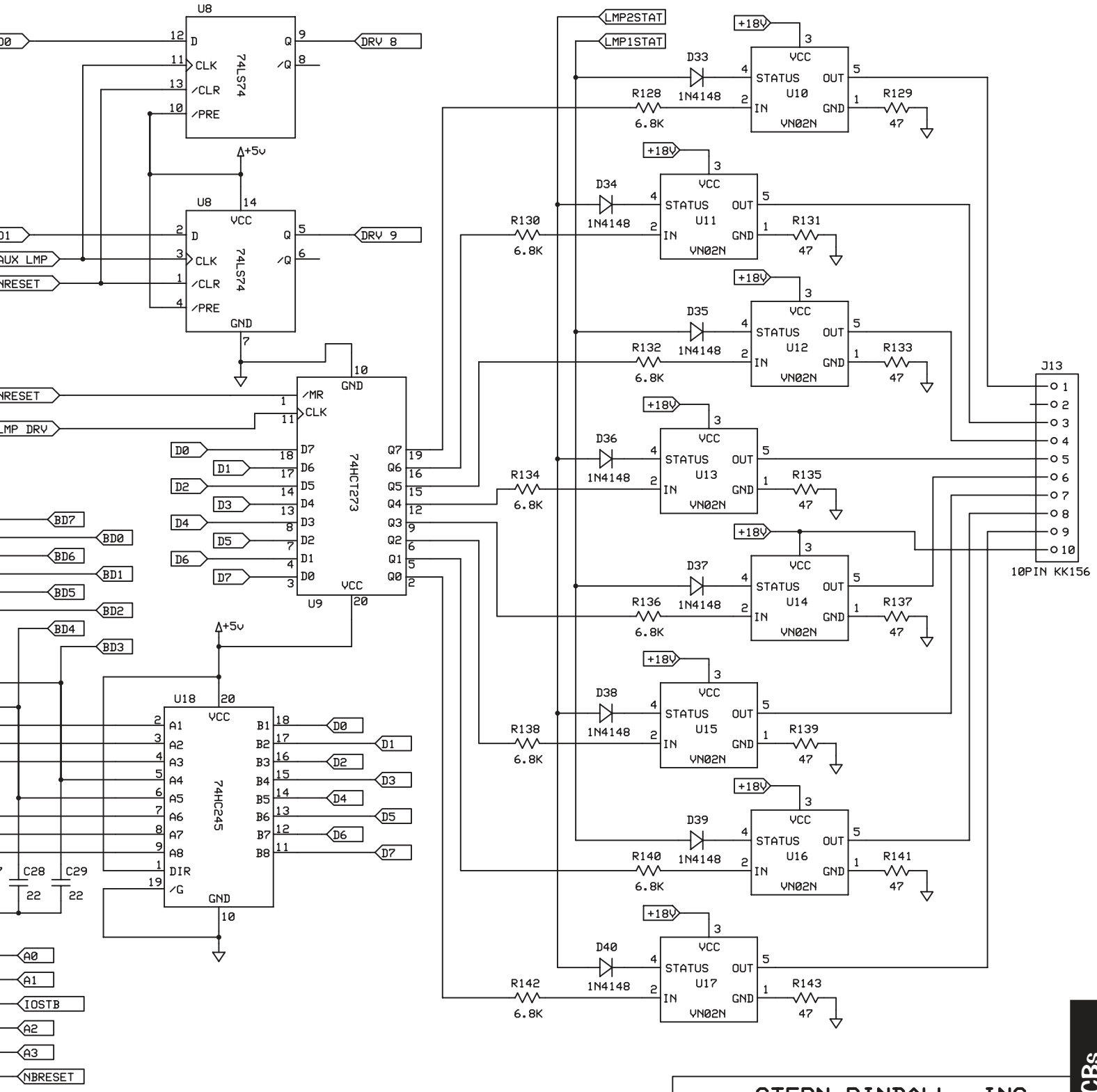

STERN PINBALL, INC.		
I/O POWER DRIVER BOARD		
520-5249-00	Rev A 5/20/2005	Page 3 of 4

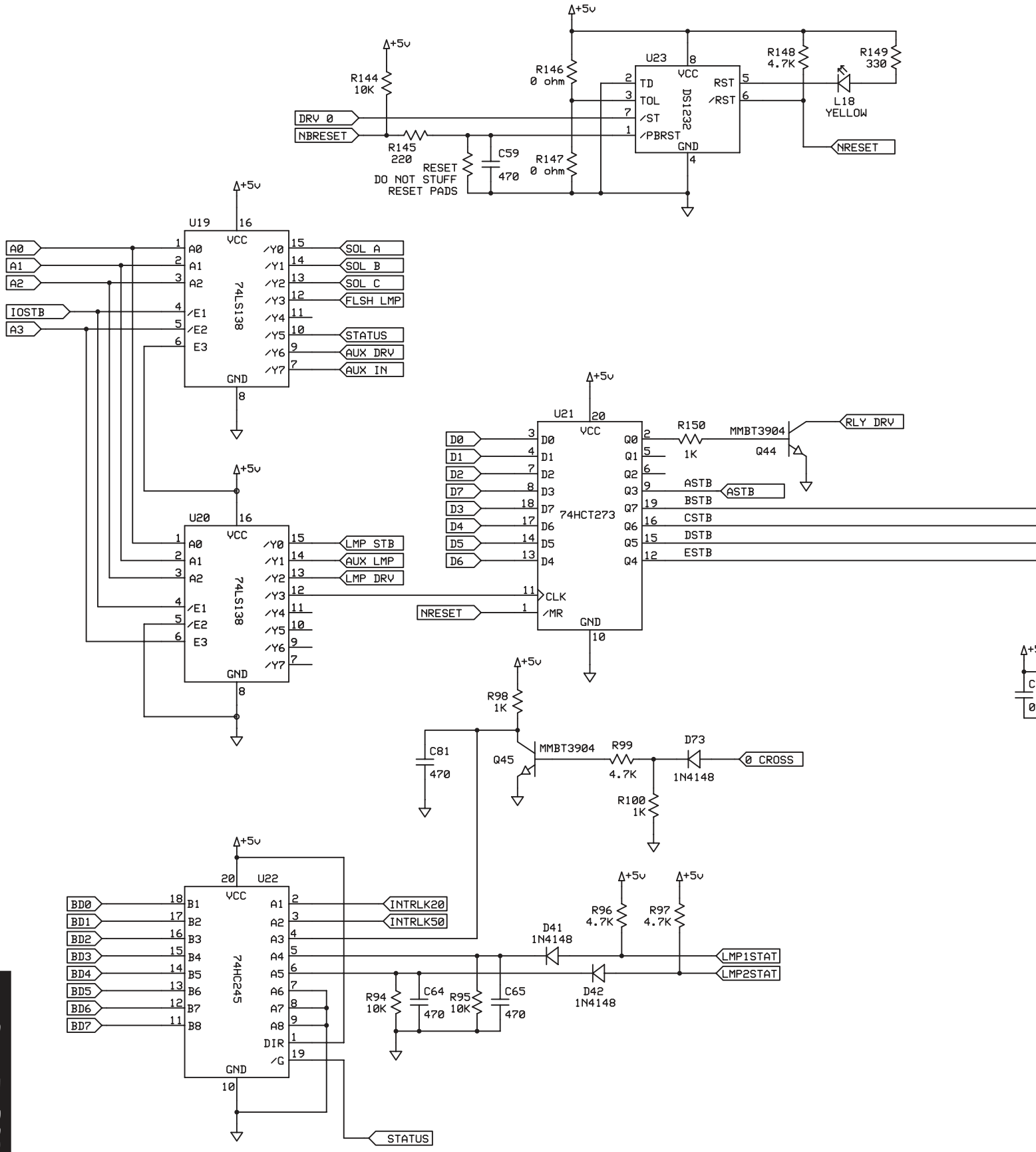
+5v
R144
10K
R146
0 ohm
U23
VCC
DS1232
TD
TOL
/ST
/PBRST
RST
/RST
GND
R148
4.7K
R149
330
L18
YELLOW
DRV 0
NBRESET
R145
220
RESET
DO NOT STUFF
RESET PADS
C59
470
R147
0 ohm
NRESET
U19
74LS138
A0
A1
A2
/E1
/E2
E3
/Y0
/Y1
/Y2
/Y3
/Y4
/Y5
/Y6
/Y7
IOSTB
A3
SOL A
SOL B
SOL C
FLSH LMP
STATUS
AUX DRV
AUX IN
U20
LMP STB
AUX LMP
LMP DRV
U21
74HCT273
D0
D1
D2
D3
D4
D5
D6
D7
Q0
Q1
Q2
Q3
Q4
Q5
Q6
Q7
CLK
/MR
R150
1K
MMBT3904
Q44
RLY DRV
ASTB
BSTB
CSTB
DSTB
ESTB
R98
1K
C81
470
Q45
R99
4.7K
D73
1N4148
0 CROSS
R100
1K
U22
74HC245
BD0
BD1
BD2
BD3
BD4
BD5
BD6
BD7
B1
B2
B3
B4
B5
B6
B7
B8
A1
A2
A3
A4
A5
A6
A7
A8
DIR
/G
INTRLK20
INTRLK50
R96
4.7K
R97
4.7K
D41
1N4148
D42
1N4148
LMP1STAT
LMP2STAT
R94
10K
C64
470
R95
10K
C65
470
STATUS

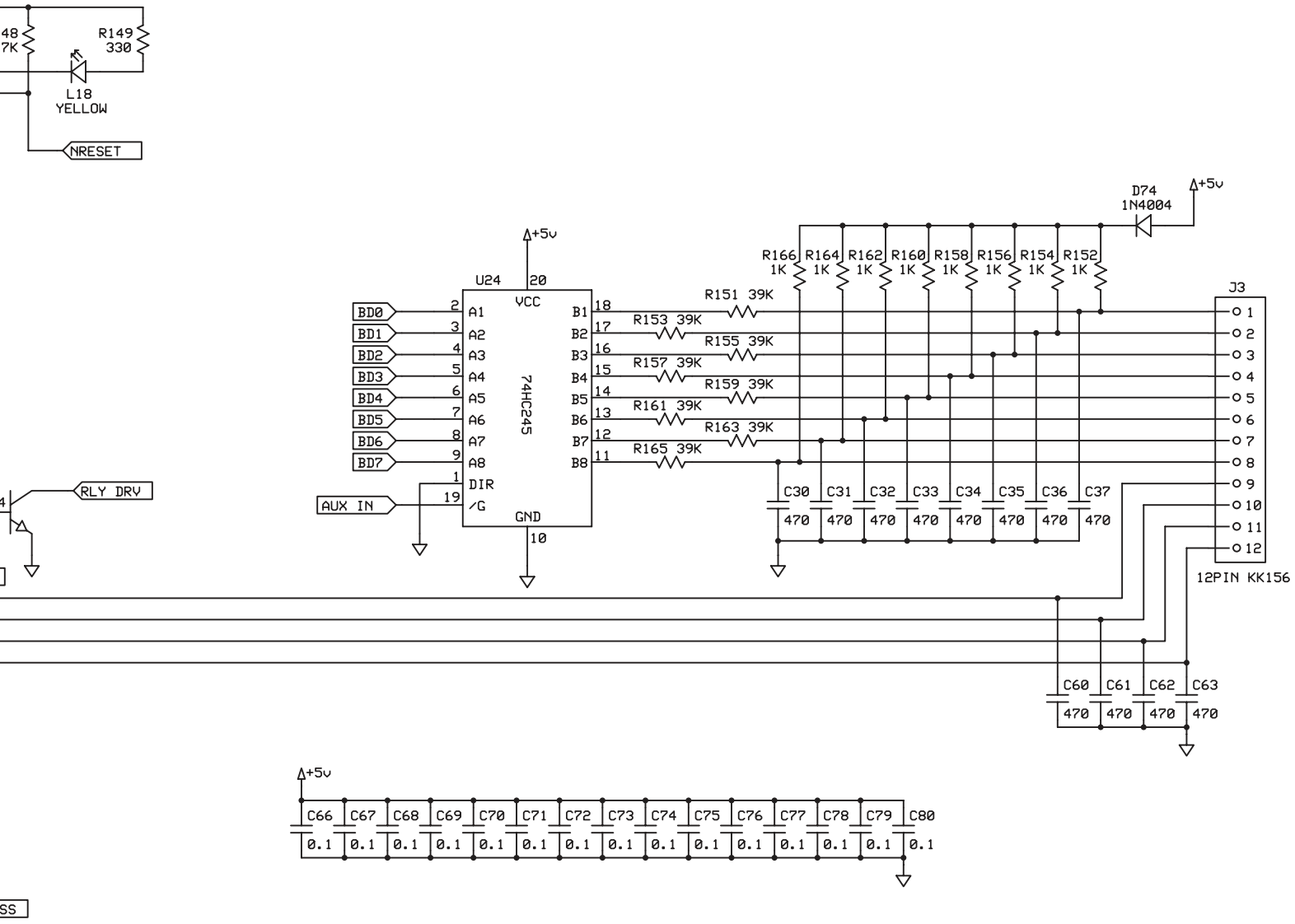

STERN PINBALL, INC.		
I/O POWER DRIVER BOARD		
520-5249-00	Rev A 5/20/2005	Page 4 of 4

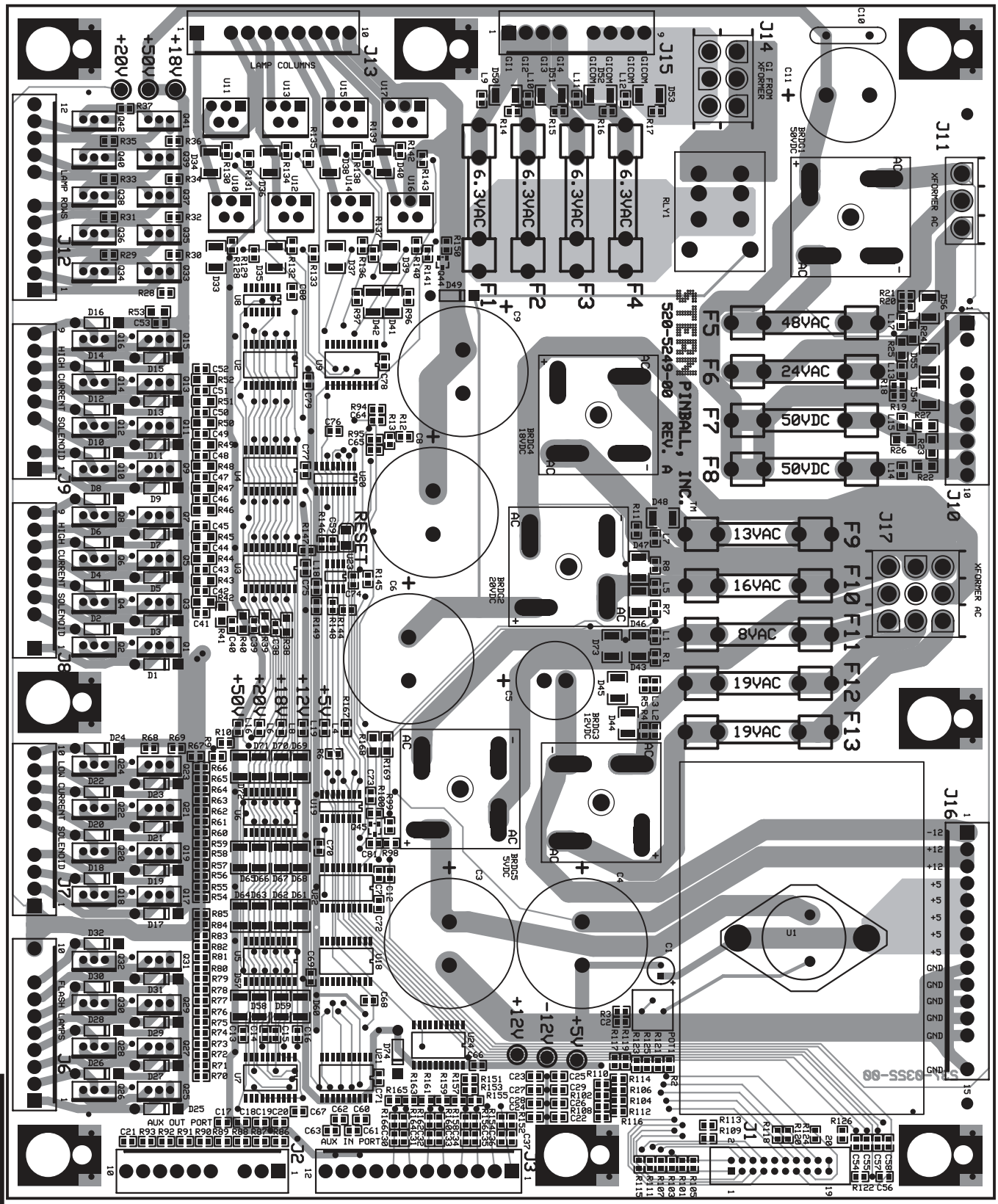
STERN PINBALL, INC.™
520-5249-00 REV. A
J1
J2
J3
J6
J7
J8
J9
J10
J11
J12
J13
J14
J15
J16
J17
F1
F2
F3
F4
F5
F6
F7
F8
F9
F10
F11
F12
F13
6.3VAC
48VAC
24VAC
50VDC
50VDC
13VAC
16VAC
8VAC
19VAC
19VAC
+18V
+20V
+50V
+12V
+5V
-12V
RESET
LAMP COLUMNS
LAMP ROWS
HIGH CURRENT SOLENOID
LOW CURRENT SOLENOID
FLASH LAMPS
AUX OUT PORT
AUX IN PORT
XFORMER AC
GI FROM XFORMER

ITEM	QTY.	SPI PART NUMBER	(MFG. P.N.)	REF-DESIGNATOR	DESCRIPTION (SM = Surface Mount)
—	**1**	**520-5249-00**		**I/O Power Driver PCB (S.A.M. System), Rev. A**	*(includes Items **1-67**)*
1	1	121-6001-00	(101-0001807)	R9	Resistor SM 0805 Film 1.5KΩ 1/10W 5%
2	22	121-6002-00	(101-0001820)	R86, R87, R88, R89, R90, R91, R92, R93, R102, R104, R106, R108, R110, R112, R114, R116, R118, R120, R122, R124, R126, R146	Resistor SM 0805 Film 100Ω 1/10W 5%
3	12	121-6020-00	(101-0001827)	R21, R94, R95, R101, R103, R105, R107, R109, R111, R113, R115, R144	Resistor SM 0805 Film 10KΩ 1/10W 5%
4	1	121-6003-00	(101-0001845)	R2	Resistor SM 0805 Film 120Ω 1/10W 5%
5	20	121-6022-00	(101-0001905)	R7, R8, R10, R11, R12, R13, R18, R19, R98, R100, R150, R152, R154, R156, R158, R160, R162, R164, R166, R167	Resistor SM 0805 Film 1KΩ 1/10W 5%
6	2	121-6004-00	(101-0001943)	R6, R145	Resistor SM 0805 Film 220Ω 1/10W 5%
7	16	121-6005-00	(101-0001849)	R55, R57, R59, R61, R63, R65, R67, R69, R71, R73, R75, R77, R79, R81, R83, R85	Resistor SM 0805 Film 22KΩ 1/10W 5%
8	2	121-6006-00	(101-0002012)	R3, R149	Resistor SM 0805 Film 330Ω 1/10W 5%
9	3	121-6007-00	(101-0002031)	R1, R4, R5	Resistor SM 0805 Film 390Ω 1/10W 5%
10	8	121-6013-00	(101-0002035)	R151, R153, R155, R157, R159, R161, R163, R165	Resistor SM 0805 Film 39KΩ 1/10W 5%
11	9	121-6008-00	(101-0002046)	R96, R97, R99, R117, R119, R121, R123, R125, R148	Resistor SM 0805 Film 4.7KΩ 1/10W 5%
12	8	121-6014-00	(101-0002065)	R129, R131, R133, R135, R137, R139, R141, R143	Resistor SM 0805 Film 47Ω 1/10W 5%
13	1	121-6015-00	(101-0002071)	R20	Resistor SM 0805 Film 47KΩ 1/10W 5%
14	8	121-6009-00	(101-0002108)	R128, R130, R132, R134, R136, R138, R140, R142	Resistor SM 0805 Film 6.8KΩ 1/10W 5%
15	16	121-6010-00	(101-0002116)	R54, R56, R58, R60, R62, R64, R66, R68, R70, R72, R74, R76, R78, R80, R82, R84	Resistor SM 0805 Film 620Ω 1/10W 5%
16	4	121-6016-00	(101-0002126)	R14, R15, R16, R17	Resistor SM 0805 Film 680Ω 1/10W 5%
17	10	121-6011-00	(101-0002296)	R28, R29, R30, R31, R32, R33, R34, R35, R36, R37	Resistor SM 1206 Film 22KΩ 1/10W 5%
18	8	121-6012-00	(101-0002473)	R22, R23, R24, R25, R26, R27, R168, R169	Resistor SM 1206 Film 8.2KΩ 1/10W 5%
19	16	121-6013-01	(101-0002378)	R38, R39, R40, R41, R42, R43, R44, R45, R46, R47, R48, R49, R50, R51, R52, R53	Resistor SM 1206 Film 39KΩ 1/10W 5%
20	16	125-6001-00	(121-0000056)	C2, C66, C67, C68, C69, C70, C71, C72, C73, C74, C75, C76, C77, C78, C79, C80	Capacitor SM 0805 Cer. .1UF 50V 10% X7R
21	25	125-6002-00	(121-0000096)	C13, C14, C15, C16, C17, C18, C19, C20, C21, C30, C31, C32, C33, C34, C35, C36, C37, C59, C60, C61, C62, C63, C64, C65, C81	Capacitor SM 0805 Cer. 470PF 50V 5% NPO
22	18	125-6003-00	(121-0004236)	C7, C12, C38, C39, C40, C41, C42, C43, C44, C45, C46, C47, C48, C49, C50, C51, C52, C53	Capacitor SM 0805 Cer. .01UF 50V 10% X7R
23	13	125-6004-00	(121-0005318)	C22, C23, C24, C25, C26, C27, C28, C29, C54, C55, C56, C57, C58	Capacitor SM 0805 Cer. 22PF 100V 5% NPO
24	1	125-5032-00	(131-0003773)	C1	Capacitor Tht. Radial Alum. 100UF 25V 20%
25	1	125-5034-00	(131-0003864)	C5	Capacitor Tht. Radial Alum. 4700UF 35V 20%
26	1	125-5029-01	(133-0003741)	C10	Capacitor Tht. Disc Cer. .1UF 500V 20%
27	1	125-6022-00	(134-0003846)	C11	Capacitor Tht. Radial Alum. 330UF 160V 20%
28	5	125-5036-01	(134-0004000)	C3, C4, C6, C8, C9	Cap. Tht. Rad. Al. 15000UF 35V 20% Snap-In
29	34	112-6001-01	(183-0004374)	D1, D2, D3, D4, D5, D6, D7, D8, D9, D10, D11, D12, D13, D14, D15, D16, D17, D18, D19, D20, D21, D22, D23, D24, D25, D26, D27, D28, D29, D30, D31, D32, D49, D74	Diode Tht. DO-41 1N4004 400V 1A
30	5	112-5000-00	(187-0004700)	BRDG1, BRDG2, BRDG3, BRDG4, BRDG5	Bridge Tht. Fullwave 100V 35A MB-35
31	10	110-0088-01	(203-0003591)	Q33, Q34, Q35, Q36, Q37, Q38, Q39, Q40, Q41, Q42	Fet Tht. TO-220 STP20NE06L NFet 60V 20A
32	16	110-0106-00	(203-0003592)	Q1, Q2, Q3, Q4, Q5, Q6, Q7, Q8, Q9, Q10, Q11, Q12, Q13, Q14, Q15, Q16	Fet Tht. TO-220 20N10L NFet 100V 20A
33	8	110-0089-00	(203-0003597)	U10, U11, U12, U13, U14, U15, U16, U17	Fet Tht. PENTAWAT VN02N NFet HighSide 26V 6A
34	2	110-0069-01	(211-0003589)	Q44, Q45	Trans. SM SOT-23 MMST3904 NPN 40V 0.2A
35	16	110-0067-00	(213-0003565)	Q17, Q18, Q19, Q20, Q21, Q22, Q23, Q24, Q25, Q26, Q27, Q28,Q29, Q30, Q31, Q32	Transistor Tht. TO-220 TIP122 NPN 100V 5A
36	3	100-6003-00	(221-0000972)	U18, U22, U24	I.C. SM SOIC 74HC245 Oct. Bus. Xcvr.
37	1	100-6000-00	(221-0011253)	U23	I.C. SM SOIC DS1832S, SO-8
38	8	100-5056-00	(221-0001287)	U2, U3, U4, U5, U6, U7, U9, U21	I.C. SM SOIC 74HCT273 Oct. D F-F
39	2	100-6001-00	(221-0003728)	U19, U20	I.C. SM SO 74LS138D Hex Inverter; 3-8 DC/DMX
40	1	100-6002-00	(221-0011135)	U8	I.C. SM SOIC 74LS74AD SOIC-14
41	1	100-0356-00	(225-0003582)	U1	I.C. Tht. TO-3 LM338 5A Adjust. Voltage Reg.
42	5	045-	(315-0003427)	J2, J6, J7, J10, J13	Con. Tht. Hdr. 10 Pin, 1 Row .156"
43	1	045-	(315-0006910)	J1	Con. Tht. Hdr. 20 Pin, 2 Row .1"
44	2	045-	(315-0003430)	J3, J12	Con. Tht. Hdr. 12 Pin, 1 Row .156"
45	1	045-	(315-0003432)	J16	Con. Tht. Hdr. 15 Pin, 1 Row .156"
46	1	045-	(315-0003503)	J11	Con. Tht. Pwr. 3 Pin, 1 Row .25"
47	1	045-	(315-0003504)	J14	Con. Tht. Pwr. 6 Pin, 2 Row .25"
48	1	045-	(315-0003505)	J17	Con. Tht. Pwr. 9 Pin, 3 Row .25"
49	3	045-	(315-0003821)	J8, J9, J15	Con. Tht. Hdr. 9 Pin, 1 Row .156"
50	2	200-5000-08	(407-0003117)	F6, F8	Fuse 3 Amp 250V Slo-Blo (Glass, Tht. 3AG)
51	2	200-5000-06	(407-0003118)	F7, F11	Fuse 4 Amp 250V Slo-Blo (Glass, Tht. 3AG)
52	7	200-5000-01	(407-0003119)	F1, F2, F3, F4, F10, F12, F13	Fuse 5 Amp 250V Slo-Blo (Glass, Tht. 3AG)
53	1	200-5000-03	(407-0003121)	F5	Fuse 7 Amp 250V Slo-Blo (Glass, Tht. 3AG)
54	1	200-5000-05	(407-0003122)	F9	Fuse 8 Amp 250V Slo-Blo (Glass, Tht. 3AG)
55	1	121-5039-00	(415-0004788)	POT1	Potiento THT 50Ω Single Top Adjust. Trimr.
56	1	165-6000-00	(425-0006913)	L18	LED SM Yellow 0805 LED
57	5	165-6001-00	(425-0007753)	L4, L6, L8, L16, L19	LED SM Green Ultrabright Top
58	13	165-6002-00	(425-0007755)	L1, L2, L3, L5, L7, L9, L10, L11, L12, L15, L17	LED SM Red Ultrabright Top 0805 LED
59	1	190-5002-00	(448-0004778)	RLY1	Relay Tht. GW DPDT10A DC24 2400VA PC MNT
60	1	127-5001-00	(461-0003520)	*for* BRDG 4, BRDG 5	Heatsink, Sq. Finned Ba TO-220 Avid 531102
61	1	127-5001-02	(461-0003534)	*for* U1	Heatsink All Large Finned Alum. TO-3
62	1	127-5001-04	(579103B00000G)	*for* U1 *on* TO-3 LM338 5A Adj. Volt. Reg.	Heatsink, Circular Finned (Mfg. Aavid)
63	4	240-5008-00	(503-0004469)	*2 pcs. for* U1 *1 pc. each for* BRDG 4 & 5	#6-32 Keps Nut
64	26	205-0004-00	(503-0004667)	*2 pcs. each for* F1 - F13	Fuseclip with End Stops (+ Ears)
65	4	237-5504-00	(504-0004610)	*2 pcs. for* U1 1 *pc. each for* BRDG 4 & 5	#6-32 X 3/4" PPH MS (Zinc) Screw
66	2	254-5007-02	(507-0004544)	*for* BRDG 4 & 5 (Mfg. .169" I.D. X 9/32" O.D. X 1/4")	1/4" Slf. Rtn. Spacer White
67	5	254-5007-05	(507-0004547)	*for* BRDG1, 2 & 3 and *for* Mounting Holes	5/16" Slf. Rtn. Spacer White

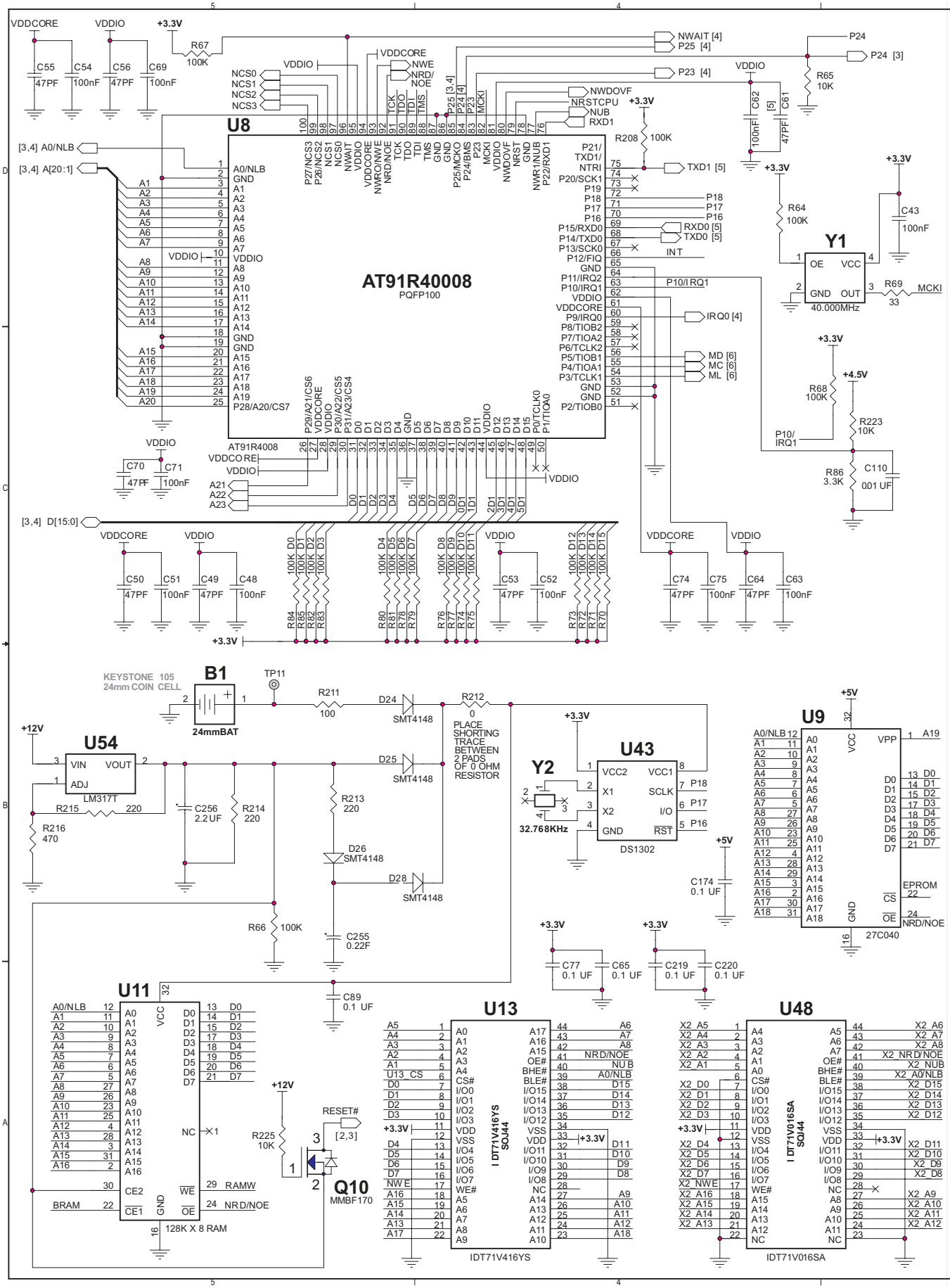
U8
AT91R40008
PQFP100
AT91R4008
Y1
40.000MHz
U54
LM317T
B1
KEYSTONE 105
24mm COIN CELL
24mmBAT
Y2
32.768KHz
U43
DS1302
U9
27C040
U11
128K X 8 RAM
U13
IDT71V416YS
U48
IDT71V016SA
Q10
MMBF170
PLACE SHORTING TRACE BETWEEN 2 PADS OF 0 OHM RESISTOR

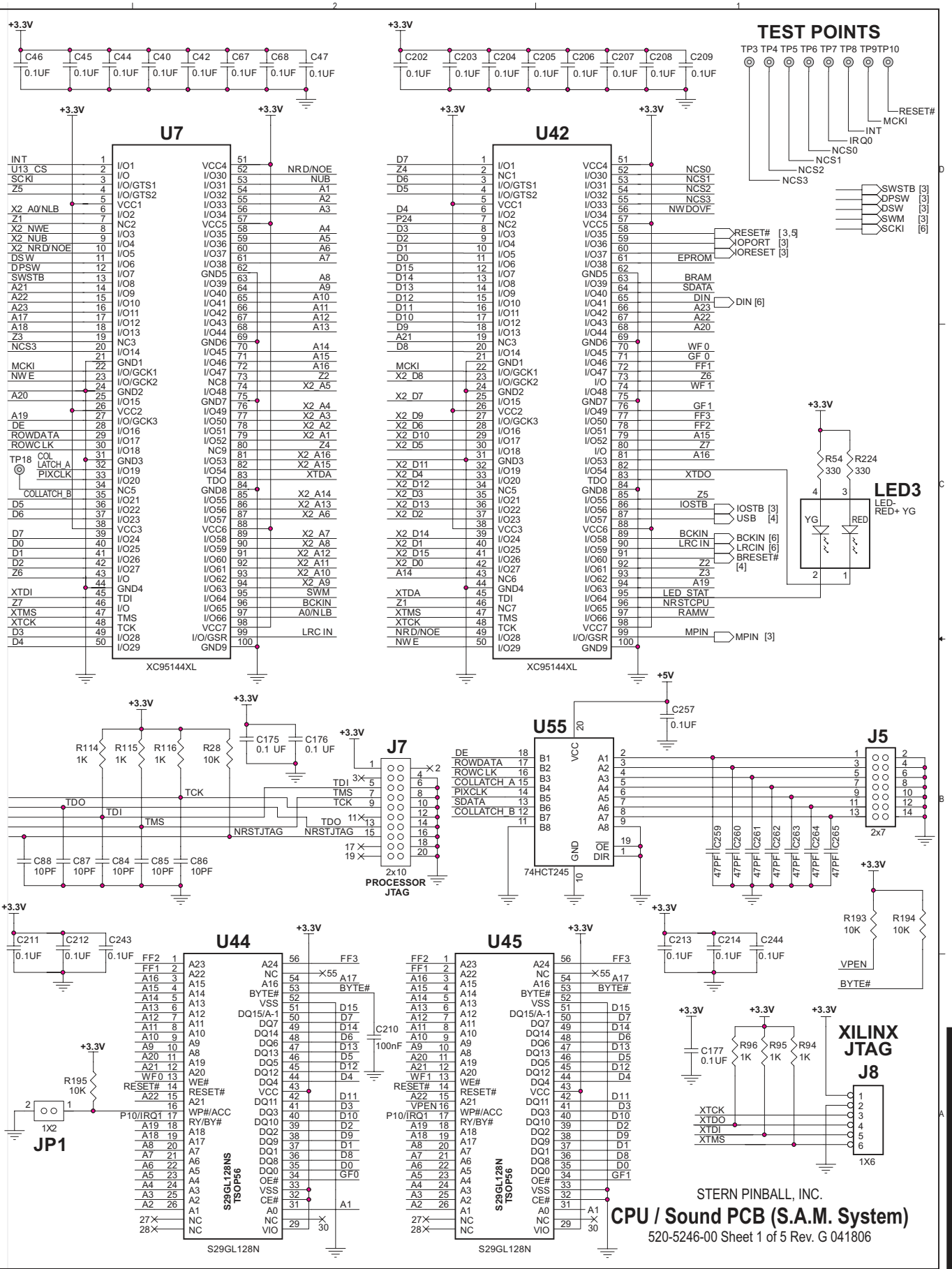
TEST POINTS
TP3 TP4 TP5 TP6 TP7 TP8 TP9 TP10
RESET#
MCKI
INT
IRQ0
NCS0
NCS1
NCS2
NCS3
SWSTB [3]
DPSW [3]
DSW [3]
SWM [3]
SCKI [6]
U7
U42
XC95144XL
RESET# [3,5]
IOPORT [3]
IORESET [3]
EPROM
BRAM
SDATA
DIN
DIN [6]
A23
A22
A20
WF 0
GF 0
FF1
Z6
WF 1
GF1
FF3
FF2
A15
Z7
A16
XTDO
Z5
IOSTB
IOSTB [3]
USB [4]
BCKIN
BCKIN [6]
LRC IN
LRCIN [6]
BRESET# [4]
Z2
Z3
A19
LED_STAT
NRSTCPU
RAMW
MPIN
MPIN [3]
LED3
LED-RED+ YG
R54 330
R224 330
J7
PROCESSOR JTAG
2x10
U55
74HCT245
J5
2x7
U44
U45
S29GL128N
S29GL128NS TSOP56
JP1
1X2
R195 10K
R193 10K
R194 10K
VPEN
BYTE#
XILINX JTAG
J8
1X6
R96 1K
R95 1K
R94 1K
C177 0.1UF
XTCK
XTDO
XTDI
XTMS
STERN PINBALL, INC.
CPU / Sound PCB (S.A.M. System)
520-5246-00 Sheet 1 of 5 Rev. G 041806

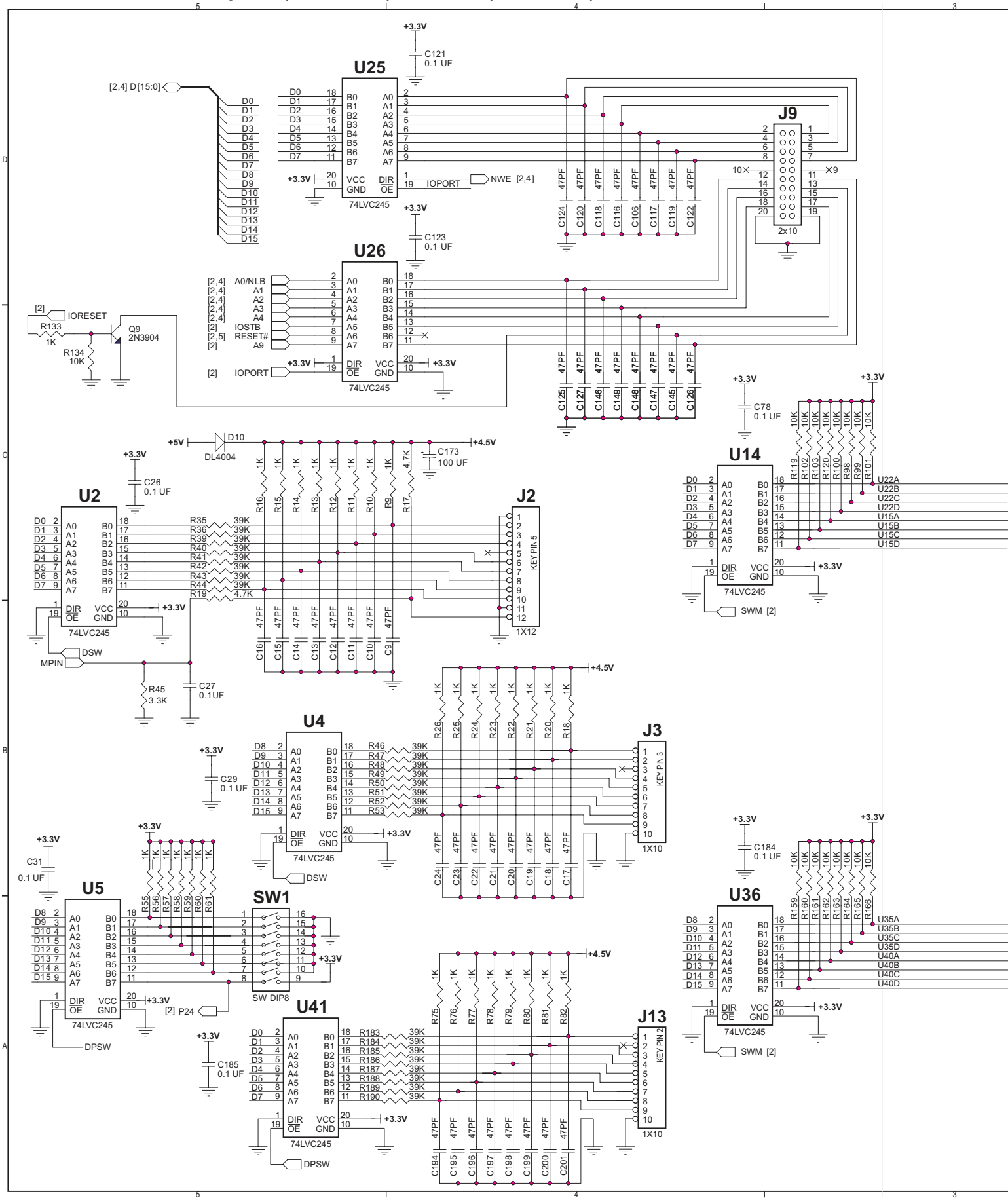
U25
U26
U2
U4
U5
U41
U14
U36
J9
J2
J3
J13
SW1
74LVC245
1X12
1X10
2x10
SW DIP8
+3.3V
+4.5V
+5V
IOPORT
NWE [2,4]
IORESET
IOSTB
RESET#
A0/NLB
DSW
MPIN
DPSW
SWM [2]
[2] P24
KEY PIN 5
KEY PIN 3
KEY PIN 2
Q9
2N3904
DL4004

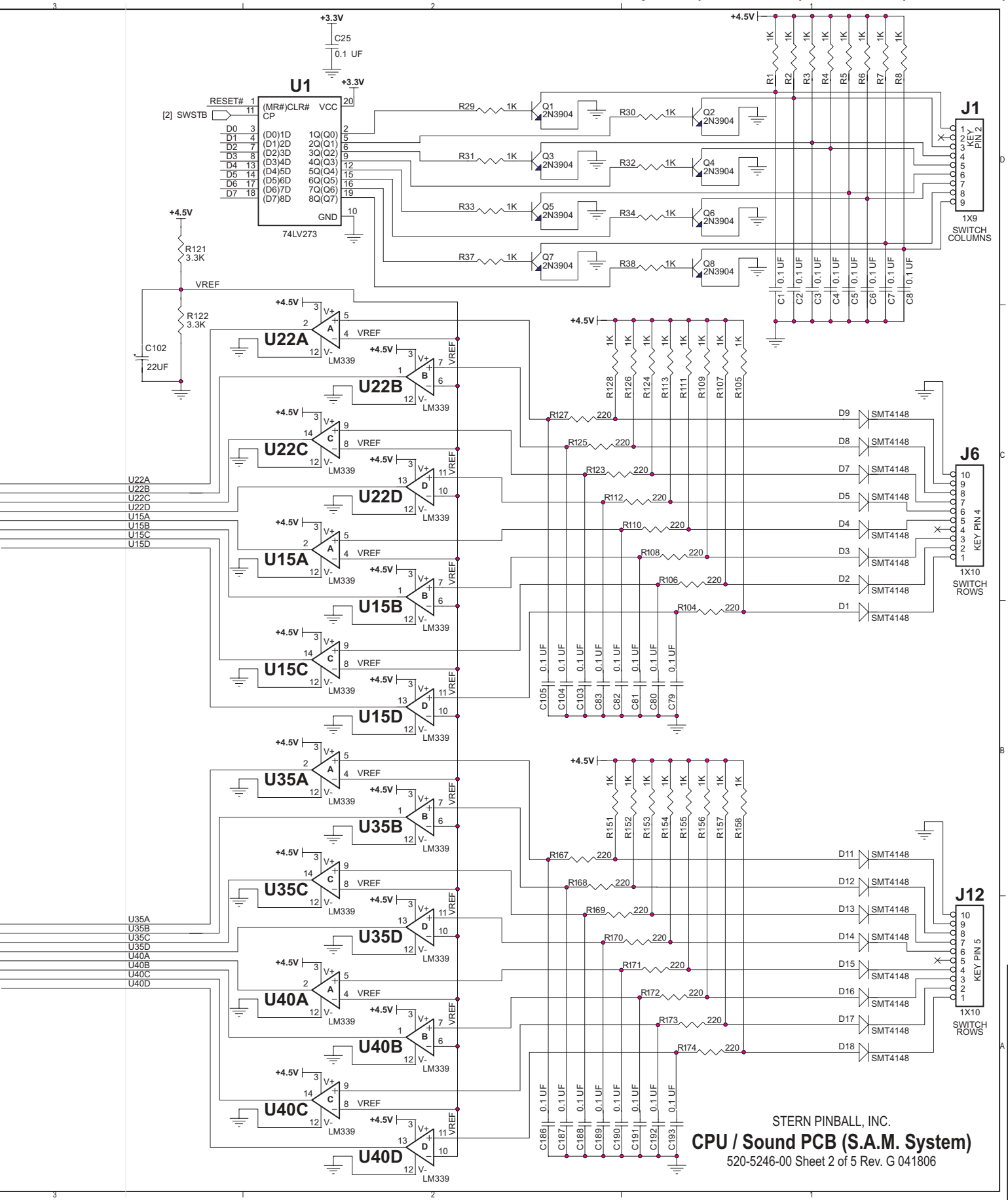
U1
74LV273
RESET#
[2] SWSTB
(MR#)CLR#
CP
VCC
GND
D0
D1
D2
D3
D4
D5
D6
D7
1Q(Q0)
2Q(Q1)
3Q(Q2)
4Q(Q3)
5Q(Q4)
6Q(Q5)
7Q(Q6)
8Q(Q7)
+3.3V
C25
0.1 UF
+4.5V
R121
3.3K
VREF
R122
3.3K
C102
22UF
U22A
U22B
U22C
U22D
U15A
U15B
U15C
U15D
U35A
U35B
U35C
U35D
U40A
U40B
U40C
U40D
LM339
R29
R30
R31
R32
R33
R34
R37
R38
Q1 2N3904
Q2 2N3904
Q3 2N3904
Q4 2N3904
Q5 2N3904
Q6 2N3904
Q7 2N3904
Q8 2N3904
1K
J1
1X9
SWITCH COLUMNS
KEY PIN 2
C1 0.1 UF
C2 0.1 UF
C3 0.1 UF
C4 0.1 UF
C5 0.1 UF
C6 0.1 UF
C7 0.1 UF
C8 0.1 UF
R127
R125
R123
R112
R110
R108
R106
R104
220
D9 SMT4148
D8 SMT4148
D7 SMT4148
D5 SMT4148
D4 SMT4148
D3 SMT4148
D2 SMT4148
D1 SMT4148
J6
1X10
SWITCH ROWS
KEY PIN 4
C105 0.1 UF
C104 0.1 UF
C103 0.1 UF
C83 0.1 UF
C82 0.1 UF
C81 0.1 UF
C80 0.1 UF
C79 0.1 UF
R167
R168
R169
R170
R171
R172
R173
R174
D11 SMT4148
D12 SMT4148
D13 SMT4148
D14 SMT4148
D15 SMT4148
D16 SMT4148
D17 SMT4148
D18 SMT4148
J12
1X10
SWITCH ROWS
KEY PIN 5
C186 0.1 UF
C187 0.1 UF
C188 0.1 UF
C189 0.1 UF
C190 0.1 UF
C191 0.1 UF
C192 0.1 UF
C193 0.1 UF
STERN PINBALL, INC.
CPU / Sound PCB (S.A.M. System)
520-5246-00 Sheet 2 of 5 Rev. G 041806

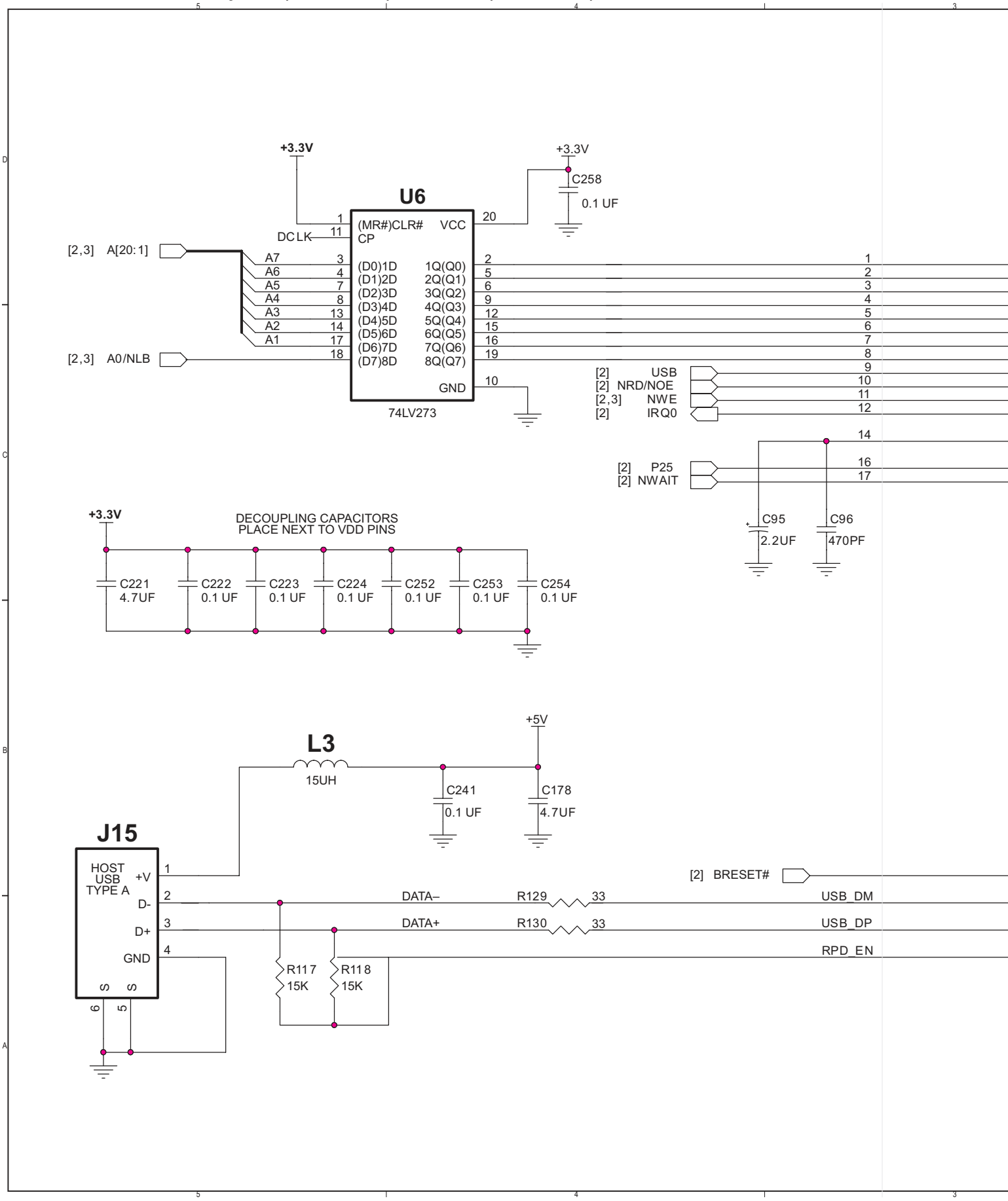
U6
74LV273
(MR#)CLR#
CP
VCC
GND
DCLK
(D0)1D
(D1)2D
(D2)3D
(D3)4D
(D4)5D
(D5)6D
(D6)7D
(D7)8D
1Q(Q0)
2Q(Q1)
3Q(Q2)
4Q(Q3)
5Q(Q4)
6Q(Q5)
7Q(Q6)
8Q(Q7)
A7
A6
A5
A4
A3
A2
A1
[2,3] A[20:1]
[2,3] A0/NLB
+3.3V
C258
0.1 UF
[2] USB
[2] NRD/NOE
[2,3] NWE
[2] IRQ0
[2] P25
[2] NWAIT
C95
2.2UF
C96
470PF
DECOUPLING CAPACITORS
PLACE NEXT TO VDD PINS
C221
4.7UF
C222
0.1 UF
C223
0.1 UF
C224
0.1 UF
C252
0.1 UF
C253
0.1 UF
C254
0.1 UF
L3
15UH
+5V
C241
0.1 UF
C178
4.7UF
J15
HOST
USB
TYPE A
+V
D-
D+
GND
R117
15K
R118
15K
[2] BRESET#
DATA–
DATA+
R129
R130
33
USB_DM
USB_DP
RPD_EN

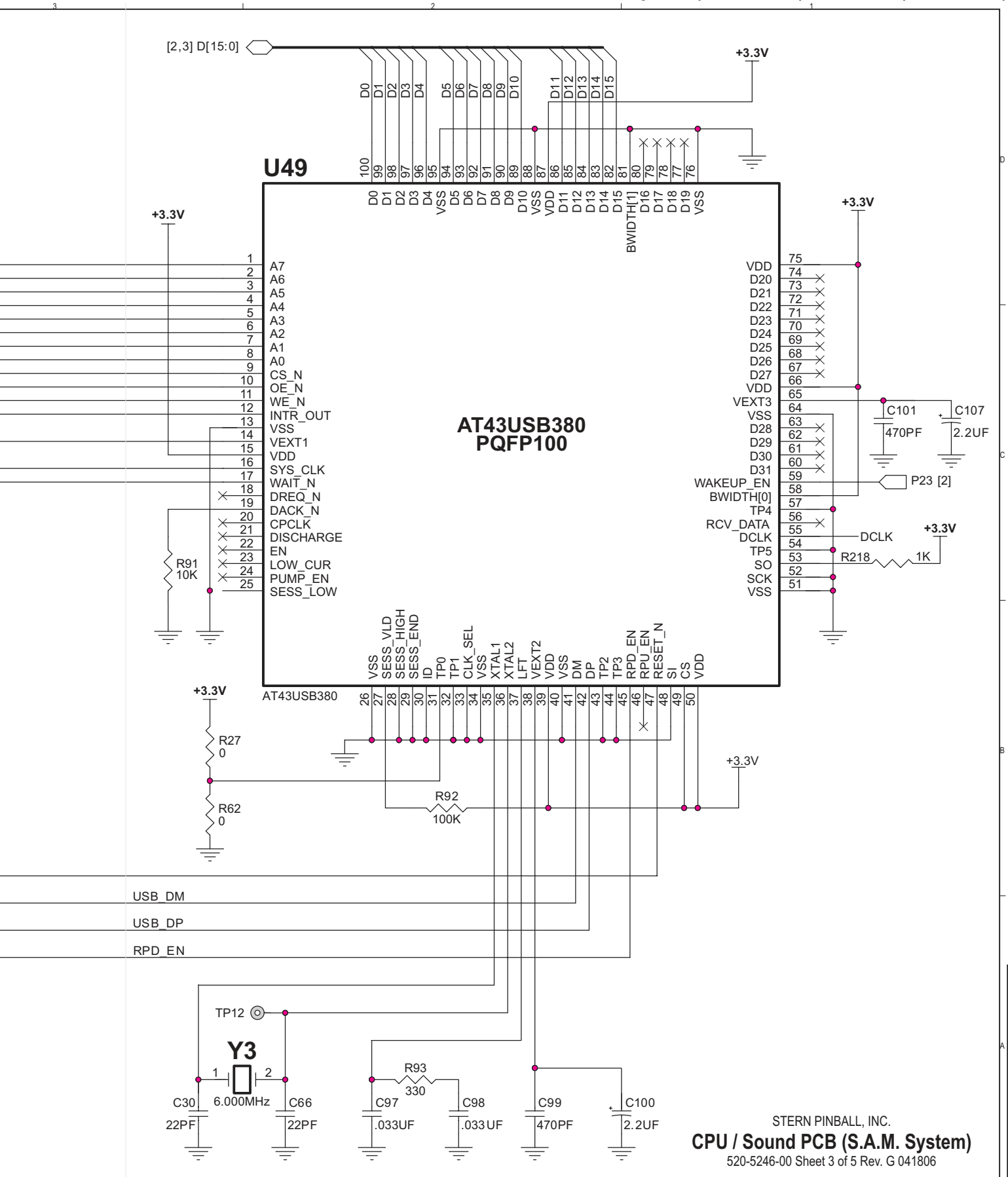
[2,3] D[15:0]
+3.3V
U49
AT43USB380
PQFP100
A7
A6
A5
A4
A3
A2
A1
A0
CS_N
OE_N
WE_N
INTR_OUT
VSS
VEXT1
VDD
SYS_CLK
WAIT_N
DREQ_N
DACK_N
CPCLK
DISCHARGE
EN
LOW_CUR
PUMP_EN
SESS_LOW
VDD
D20
D21
D22
D23
D24
D25
D26
D27
VDD
VEXT3
VSS
D28
D29
D30
D31
WAKEUP_EN
BWIDTH[0]
TP4
RCV_DATA
DCLK
TP5
SO
SCK
VSS
C101
470PF
C107
2.2UF
P23 [2]
DCLK
R218
1K
R91
10K
R27
0
R62
0
R92
100K
USB_DM
USB_DP
RPD_EN
TP12
Y3
6.000MHz
C30
22PF
C66
22PF
R93
330
C97
.033UF
C98
.033UF
C99
470PF
C100
2.2UF
STERN PINBALL, INC.
CPU / Sound PCB (S.A.M. System)
520-5246-00 Sheet 3 of 5 Rev. G 041806

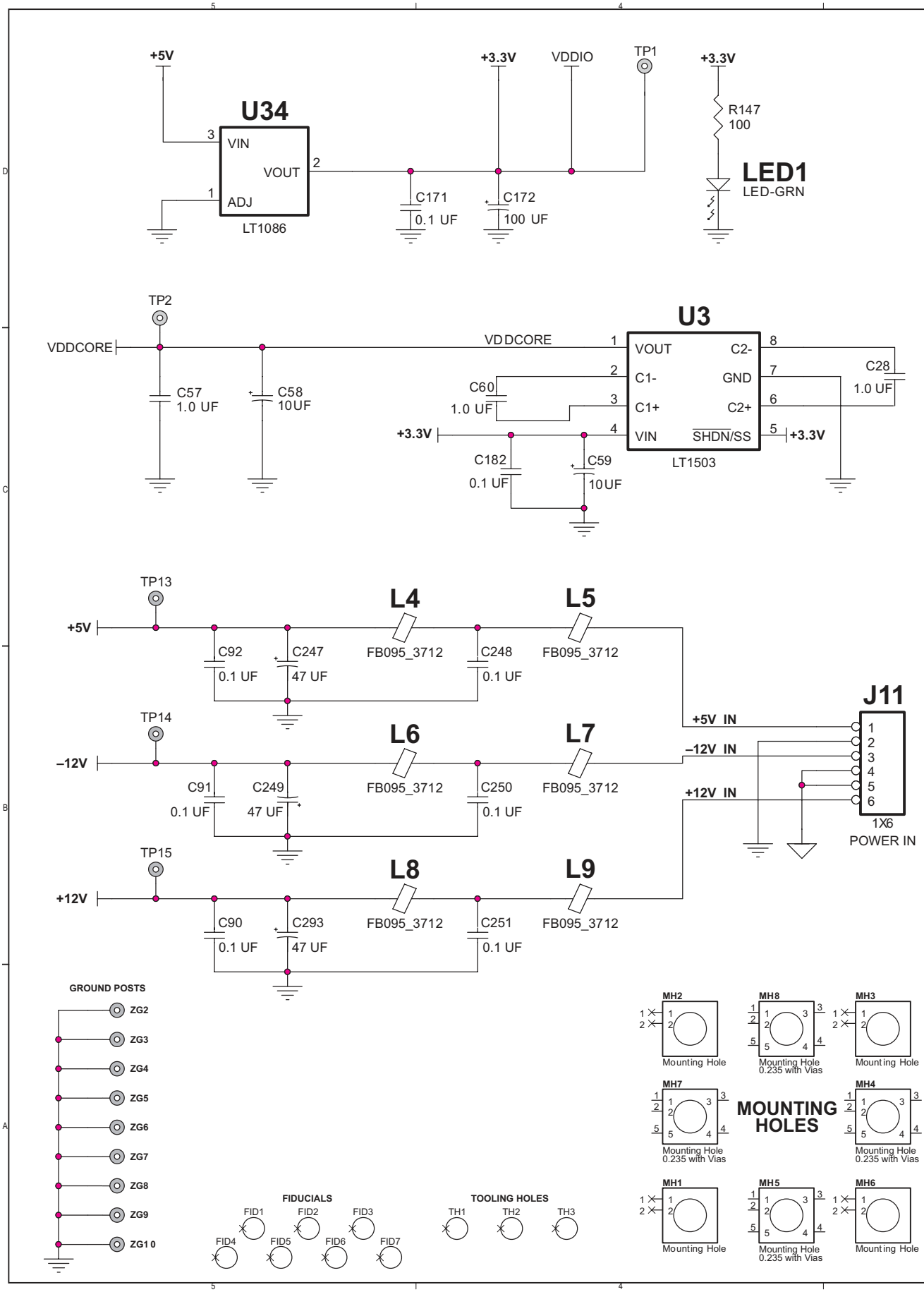
+5V
U34
VIN
VOUT
ADJ
LT1086
+3.3V
VDDIO
TP1
C171
0.1 UF
C172
100 UF
+3.3V
R147
100
LED1
LED-GRN
TP2
VDDCORE
C57
1.0 UF
C58
10UF
U3
VOUT
C1-
C1+
VIN
C2-
GND
C2+
SHDN/SS
LT1503
C60
1.0 UF
C28
1.0 UF
+3.3V
C182
0.1 UF
C59
10UF
TP13
+5V
L4
L5
C92
0.1 UF
C247
47 UF
FB095_3712
C248
0.1 UF
TP14
–12V
L6
L7
C91
0.1 UF
C249
47 UF
C250
0.1 UF
TP15
+12V
L8
L9
C90
0.1 UF
C293
47 UF
C251
0.1 UF
+5V IN
–12V IN
+12V IN
J11
1X6
POWER IN
GROUND POSTS
ZG2
ZG3
ZG4
ZG5
ZG6
ZG7
ZG8
ZG9
ZG10
FIDUCIALS
FID1
FID2
FID3
FID4
FID5
FID6
FID7
TOOLING HOLES
TH1
TH2
TH3
MOUNTING HOLES
MH1
MH2
MH3
MH4
MH5
MH6
MH7
MH8
Mounting Hole
Mounting Hole 0.235 with Vias

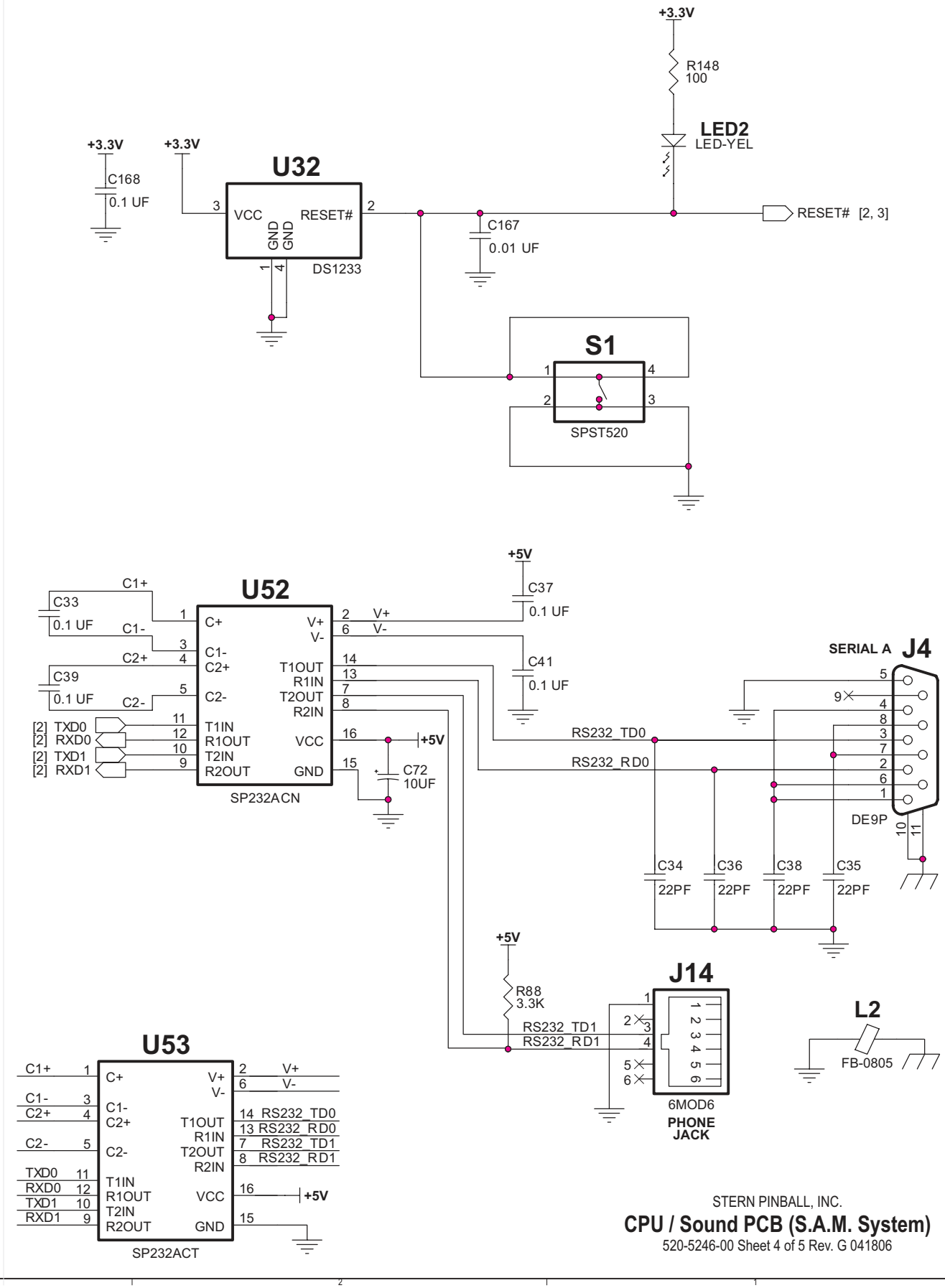
+3.3V
R148
100
LED2
LED-YEL
+3.3V
+3.3V
C168
0.1 UF
U32
VCC
RESET#
GND
GND
DS1233
RESET# [2, 3]
C167
0.01 UF
S1
SPST520
+5V
C37
0.1 UF
C41
0.1 UF
C1+
C33
0.1 UF
C1-
C2+
C39
0.1 UF
C2-
U52
C+
C1-
C2+
C2-
T1IN
R1OUT
T2IN
R2OUT
V+
V-
T1OUT
R1IN
T2OUT
R2IN
VCC
GND
SP232ACN
[2] TXD0
[2] RXD0
[2] TXD1
[2] RXD1
+5V
C72
10UF
SERIAL A
J4
DE9P
RS232_TD0
RS232_RD0
C34
22PF
C36
22PF
C38
22PF
C35
22PF
+5V
R88
3.3K
RS232_TD1
RS232_RD1
J14
6MOD6
PHONE
JACK
L2
FB-0805
U53
SP232ACT
STERN PINBALL, INC.
CPU / Sound PCB (S.A.M. System)
520-5246-00 Sheet 4 of 5 Rev. G 041806

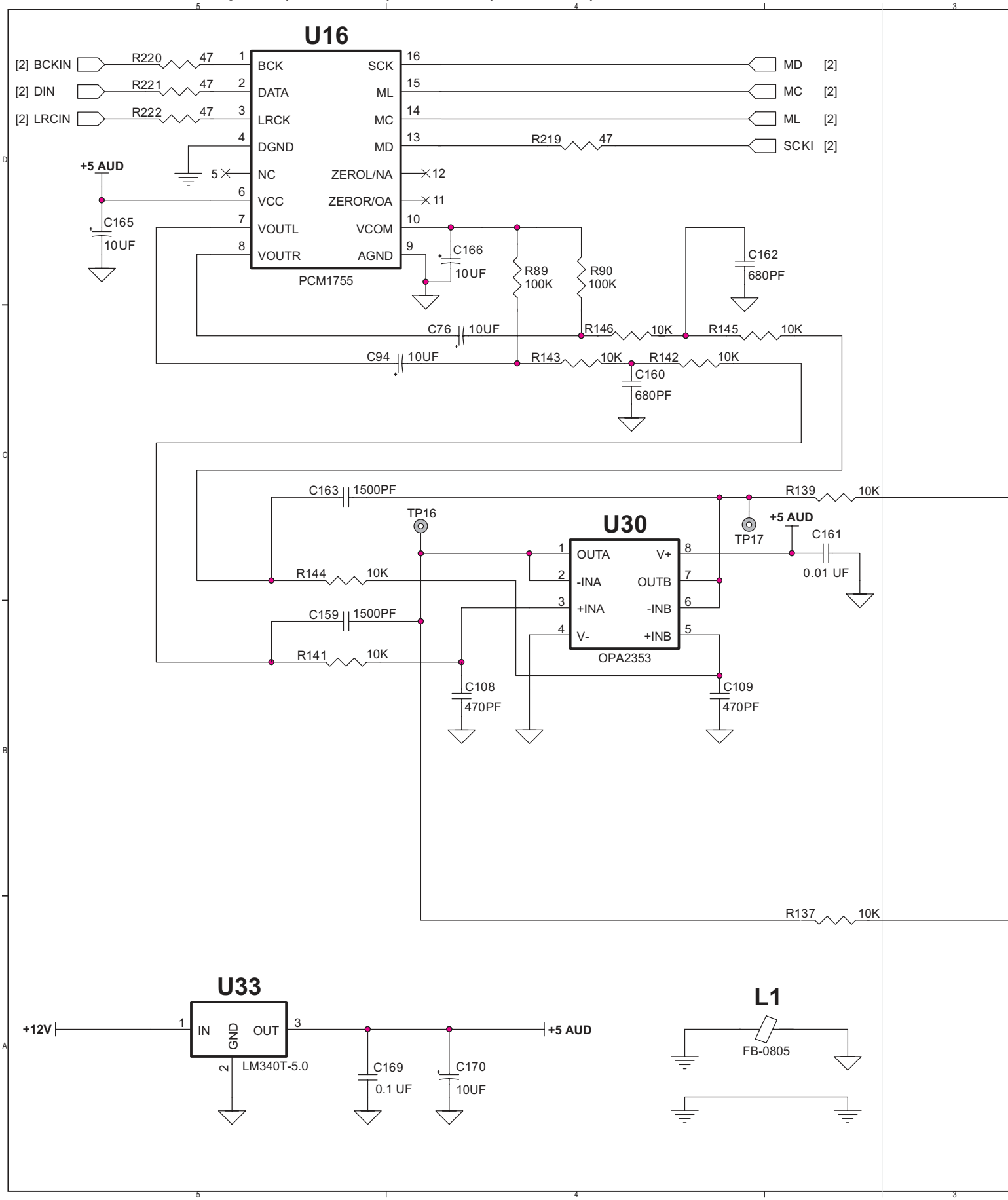
U16
PCM1755
BCK
DATA
LRCK
DGND
NC
VCC
VOUTL
VOUTR
SCK
ML
MC
MD
ZEROL/NA
ZEROR/OA
VCOM
AGND
[2] BCKIN
[2] DIN
[2] LRCIN
MD [2]
MC [2]
ML [2]
SCKI [2]
R220 47
R221 47
R222 47
R219 47
+5 AUD
C165 10UF
C166 10UF
C162 680PF
R89 100K
R90 100K
C76 10UF
C94 10UF
R146 10K
R145 10K
R143 10K
R142 10K
C160 680PF
C163 1500PF
C159 1500PF
R144 10K
R141 10K
R139 10K
R137 10K
TP16
TP17
U30
OPA2353
OUTA
-INA
+INA
V-
V+
OUTB
-INB
+INB
C161 0.01 UF
C108 470PF
C109 470PF
U33
LM340T-5.0
IN
GND
OUT
+12V
+5 AUD
C169 0.1 UF
C170 10UF
L1
FB-0805

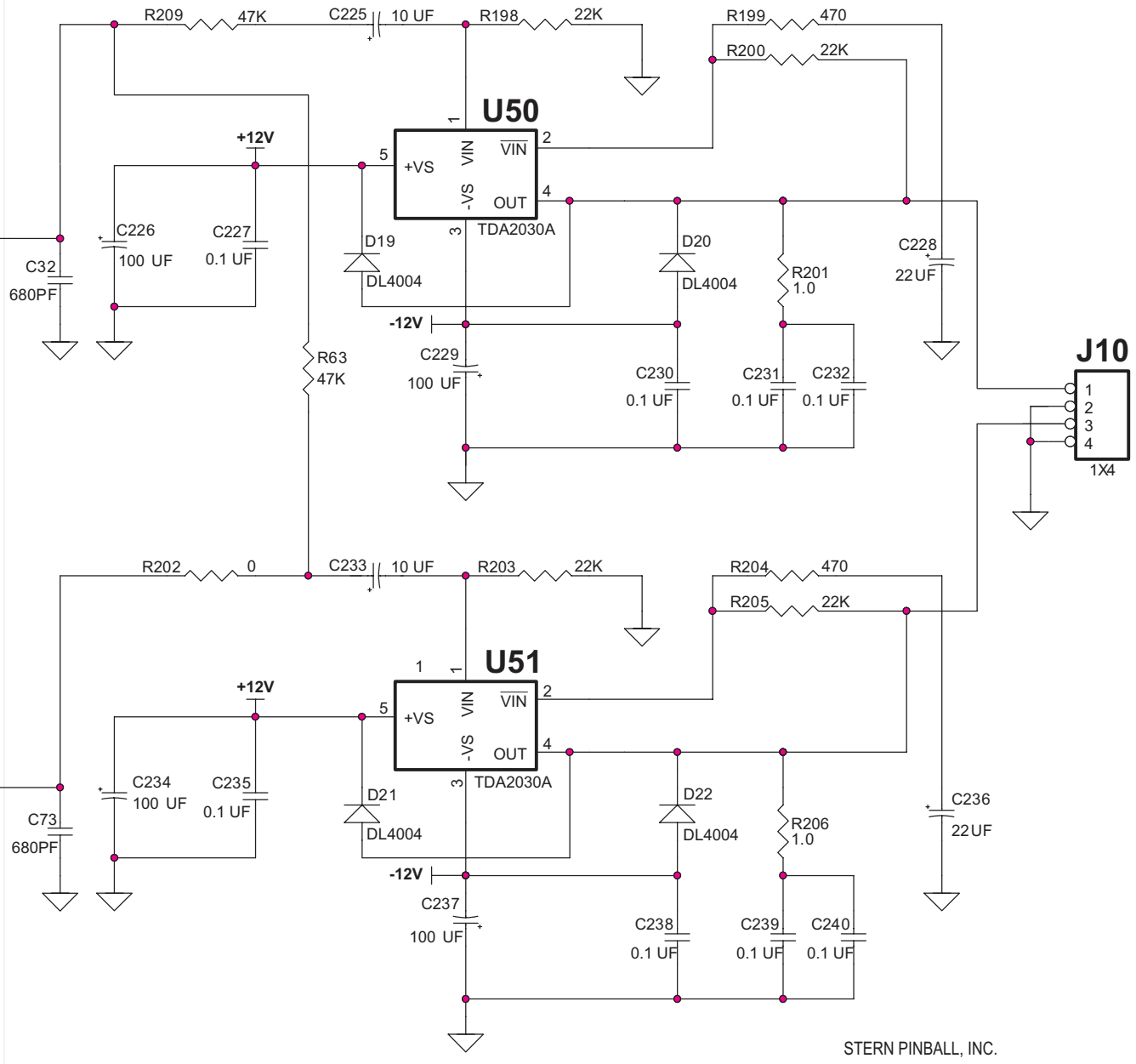

STERN PINBALL, INC.

CPU / Sound PCB (S.A.M. System)

520-5246-00 Sheet 3 of 5 Rev. G 041806

CPU / SOUND PCB S.A.M. System (520-5246-00) Component Layout

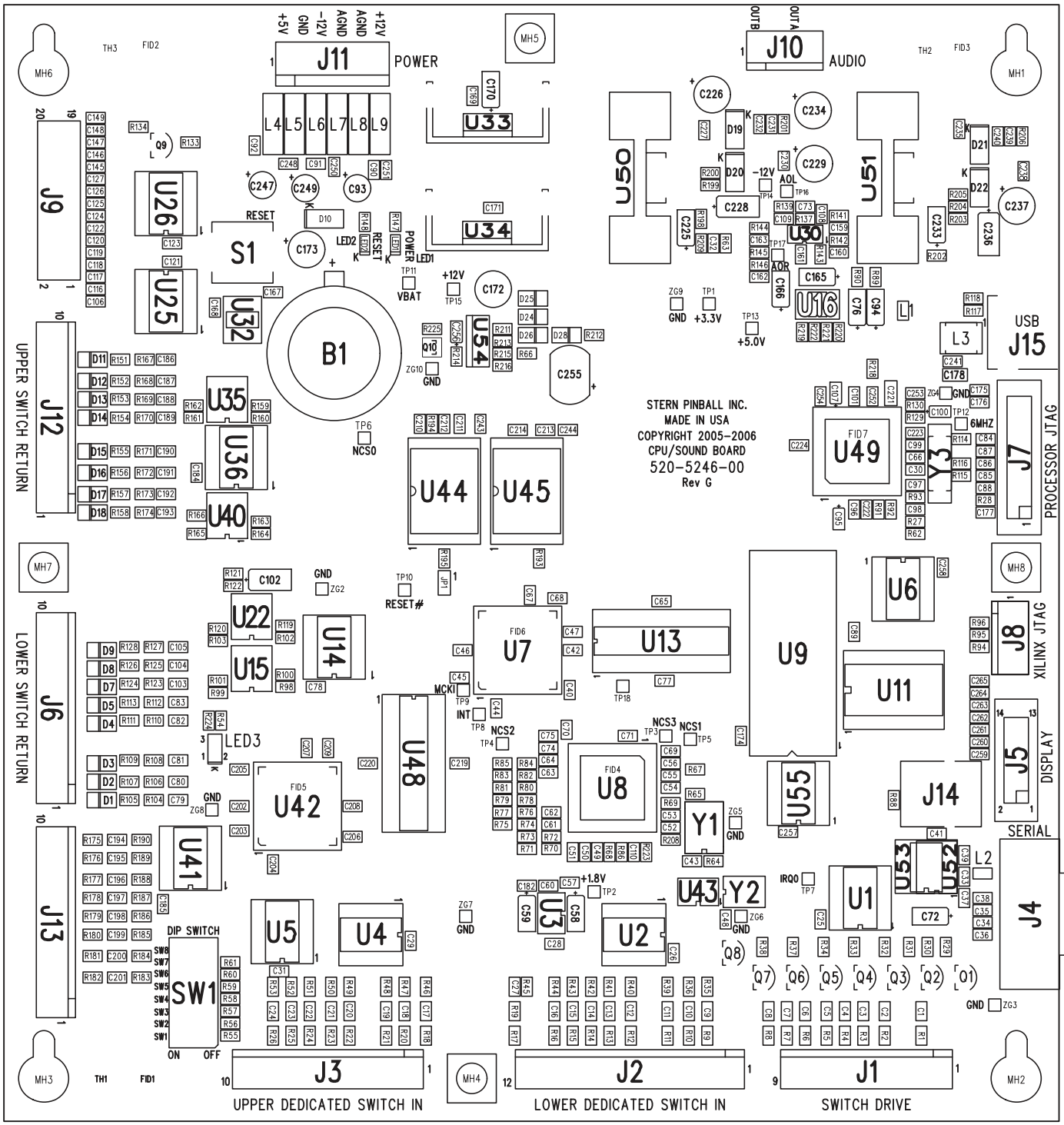

CPU / SOUND PCB S.A.M. System (520-5246-00) Component Parts

ITEM	QTY.	SPI PART NUMBER	(MFG. P.N.)	REF-DESIGNATOR	DESCRIPTION (SM = Surface Mount)
—	**1**	**520-5246-00**		**CPU/Sound PCB (S.A.M. System), Rev. G** *(includes Items **1-90**)*	
1	3	121-6017-00	(101-0001790)	R27, R202, R212	Resistor SM 0805 0.0Ω 1/10W 5%
2	2	121-6108-00	(101-0001792)	R201, R206	Resistor SM 0805 1.0Ω 1/10W 5%
3	24	121-6001-00	(101-0001807)	R9, R10, R11, R12, R13, R14, R15, R16, R18, R20, R21, R22, R23, R24, R25, R26, R175, R176, R177, R178, R179, R180, R181, R182	Resistor SM 0805 1.5KΩ 1/10W 5%
4	3	121-6002-00	(101-0001820)	R147, R148, R211	Resistor SM 0805 Film 100Ω 1/10W 5%
5	24	121-6019-00	(101-0001823)	R64, R66, R67, R68, R70, R71, R72, R73, R74, R75, R76, R77, R78, R79, R80, R81, R82, R83, R84, R85, R89, R90, R92, R208	Resistor SM 0805 100KΩ 1/10W 5%
6	33	121-6020-00	(101-0001827)	R28, R65, R91, R98, R99, R100, R101, R102, R103, R119, R120, R134, R137, R139, R141, R142, R143, R144, R145, R146, R159, R160, R161, R162, R163, R164, R165, R166, R193, R194, R195, R223, R225	Resistor SM 0805 Film 10KΩ 1/10W 5%
7	2	121-6021-00	(101-0001880)	R117, R118	Resistor SM 0805 15KΩ 1/10W 5%

Parts List Continued Next Page.

CPU / SOUND PCB S.A.M. System (520-5246-00) Parts *Continued*

ITEM	QTY.	SPI PART NUMBER	(MFG. P.N.)	REF-DESIGNATOR	DESCRIPTION (SM = Surface Mount)
8	47	121-6022-00	(101-0001905)	R1, R2, R3, R4, R5, R6, R7, R8, R29, R30, R31, R32, R33, R34, R37, R38, R55, R56, R57, R58, R59, R60, R61, R94, R95, R96, R105, R107, R109, R111, R113, R114, R115, R116, R124, R126, R128, R133, R151, R152, R153, R154, R155, R156, R157, R158, R218, LED2	Resistor SM 0805 1KΩ 1/10W 5%
9	19	121-6004-00	(101-0001943)	R104, R106, R108, R110, R112, R123, R125, R127, R167, R168, R169, R170, R171, R172, R173, R174, R213, R214, R215	Resistor SM 0805 Film 220Ω 1/10W 5%
10	4	121-6005-00	(101-0001849)	R198, R200, R203, R205	Resistor SM 0805 Film 22KΩ 1/10W 5%
11	5	121-6023-00	(101-0001889)	R45, R86, R88, R121, R122	Resistor SM 0805 3.3KΩ 1/10W 5%
12	3	121-6024-00	(101-0002009)	R69, R129, R130	Resistor SM 0805 33Ω 1/10W 5%
13	2	121-6006-00	(101-0002012)	R54, R93	Resistor SM 0805 Film 330Ω 1/10W 5%
14	24	121-6013-00	(101-0002035)	R35, R36, R39, R40, R41, R42, R43, R44, R46, R47, R48, R49, R50, R51, R52, R53, R183, R184, R185, R186, R187, R188, R189, R190	Resistor SM 0805 Film 39KΩ 1/10W 5%
15	2	121-6008-00	(101-0002046)	R17, R19	Resistor SM 0805 Film 4.7KΩ 1/10W 5%
16	4	121-6014-00	(101-0002065)	R219, R220, R221, R222	Resistor SM 0805 Film 47Ω 1/10W 5%
17	3	121-6025-00	(101-0002067)	R199, R204, R216	Resistor SM 0805 470Ω 1/10W 5%
18	1	121-6015-00	(101-0002071)	R209	Resistor SM 0805 Film 47KΩ 1/10W 5%
19	99	125-6001-00	(121-0000056)	C25, C26, C27, C29, C31, C33, C37, C39, C40, C41, C42, C43, C44, C45, C46, C47, C48, C51, C52, C54, C62, C64, C65, C67, C68, C69, C71, C75, C77, C78, C79, C80, C81, C82, C83, C89, C90, C91, C92, C103, C104, C105, C121, C123, C168, C169, C171, C174, C175, C176, C177, C182, C184, C185, C186, C187, C188, C189, C190, C191, C192, C193, C202, C203, C204, C205, C206, C207, C208, C209, C210, C211, C212, C213, C214, C219, C220, C222, C223, C224, C227, C230, C231, C232, C235, C238, C239, C240, C241, C243, C244, C248, C250, C251, C252, C253, C254, C257, C258	Capacitor SM 0805 Cer. .1UF 50V 10% X7R
20	3	125-6013-00	(121-0000077)	C28, C57, C60	Capacitor SM 0805 Cer. 1UF 10V 10% X7R
21	1	125-6014-00	(121-0000086)	C97	Capacitor SM 0805 Cer. 3300PF 50V 5% X7R
22	7	125-6002-00	(121-0000096)	C259, C260, C261, C262, C263, C264, C265	Capacitor SM 0805 Cer. 470PF 50V 5% NPO
				Rev. G as Mods on back of PCB, Rev. H in place (FCC Caps Plasma Ribbon Cable)	
23	3	125-6015-00	(121-0000269)	C102, C228, C236	Capacitor SM Case D Tant 22UF 25V 20%
24	11	125-6003-00	(121-0004236)	C1, C2, C3, C4, C5, C6, C7, C8, C110, C161, C167	Capacitor SM 0805 Cer. .01UF 50V 10% X7R
25	49	125-6016-00	(121-0004245)	C9, C10, C11, C12, C13, C14, C15, C16, C17, C18, C19, C20, C21, C22, C23, C24, C49, C50, C53, C55, C56, C61, C63, C70, C74, C106, C116, C117, C118, C119, C120, C122, C124, C125, C126, C127, C145, C146, C147, C148, C149, C194, C195, C196, C197, C198, C199, C200, C201	Capacitor SM 0805 Cer. 47PF 50V 5% NPO
26	4	125-6017-00	(121-0005317)	C95, C100, C107, C256	Capacitor SM Case A Tant 2.2UF 16V 10%
27	6	125-6004-00	(121-0005318)	C30, C34, C35, C36, C38, C66	Capacitor SM 0805 Cer. 22PF 100V 5% NPO
28	2	125-6005-00	(121-0006113)	C178, C221	Capacitor SM 1206 Cer. 4.7PF 16V 20% Y5V
29	2	125-6006-00	(121-0007394)	C159, C163	Capacitor SM 603 Cer. 1500PF 25V 10% X7R
30	10	125-6007-00	(121-0007853)	C58, C59, C72, C76, C94, C165, C166, C170, C225, C233	Capacitor SM Case C Tant 10UF 16V 20%
31	1	125-6018-00	(121-0010097)	C98	Cap. SM 805 Cer. .033UF 50V +80/-20% Y5V
32	4	125-6009-00	(121-0010493)	C32, C73, C160, C162	Capacitor SM 805 Cer. 680PF 50V 5% NPO
33	6	125-6019-00	(134-0005415)	C172, C173, C226, C229, C234, C237	Capacitor Tht. Radial Alum. 100UF 35V 20%
34	3	125-6020-00	(134-0007336)	C93, C247, C249	Capacitor Tht. Radial Alum. 47UF 35V 20%
35	1	125-6010-00	(139-0006487)	C255	Capacitor Tht. .22UF 5.5V, Gold, SD, Vert
36	6	125-6011-00	(161-0004959)	L4, L5, L6, L7, L8, L9	Ind.-SM Ferrite100Ω 1234 Smt.
37	2	125-6012-00	(161-0007286)	L1, L2	Ind.-SM 805 Bead 600Ω 100Mhz 25% 500mA
38	1	125-6021-00	(161-0009686)	L3	Ind.-SM EP Inductor15uH 1100mA 20%
39	20	112-6000-00	(181-0004347)	D1, D2, D3, D4, D5, D7, D8, D9, D11, D12, D13, D14, D15, D16, D17, D18, D24, D25, D26, D28	Diode SM MiniMELFDL/LL4148 100V 500mW
40	5	112-6001-00	(181-0004478)	D10, D19, D20, D21, D22	Diode SM MELF DL4004 400V 1.0A
41	1	110-6000-00	(201-0006808)	Q10	Fet-SM SOT-23 MMBF170 N-Chnnl. Fet
42	9	110-0069-00	(213-0003546)	Q1, Q2, Q3, Q4, Q5, Q6, Q7, Q8, Q9	Transistor Tht. TO-92 2N3904 NPN 40V 0.2A
43	1	124-6000-00	(213-0005687)	U34	Trans. Tht. TO-220 LT1086 3.3V 1.5A Volt Reg.
44	8	100-6004-00	(221-0001000)	U2, U4, U5, U14, U25, U26, U36, U41	I.C.-SM SO 74LVC245 Oct. Bus Xcvr.
45	1	100-5048-00	(221-0003716)	U55	I.C.-SM SOIC 74HCT245DW Octal Line Xvr. W/3S
46	4	100-6005-00	(221-0003718)	U15, U22, U35, U40	I.C.-SM SO LM339 Quad Diff. Comparator
47	1	100-6006-00	(221-0005249)	U43	I.C.-SM SOIC DS1302 Time Keeper
48	1	100-6008-00	(221-0006578)	U52	I.C.-SM SOIC SP232A SO-16
49	1	100-6009-00	(221-0006914)	U32	I.C.-SM SOT-223 DS1233A2-15 Reset
50	1	100-6007-00	(221-0006919)	U30	I.C.-SM OPA2353 Dual CMOS O/A MSOP-8
51	1	100-6018-00	(221-0006940)	U48	I.C.-SM SOJ IDT71V016SA15Y SOJ-44
52A	1	100-6016-00	(221-0007056)	U7 *(must be programmed)* XC95144XL program for U7 (I.C.-SM TQFP CPLD 144 Macro Cell 3.3V)	
52B	1	100-6017-00	(221-0007056)	U42 *(must be programmed)* XC95144XL program for U42 (I.C.-SM TQFP CPLD 144 Mac. Cell 3.3V)	
53	1	124-6001-00	(221-0007298)	U3	I.C.-SM SOIC LT1503CS8-1.8
54	1	100-6012-00	(221-0010735)	U11	I.C.-SM SOIC CY62128 SRAM 128Kx8 3V LP SO32
55	1	100-6013-00	(221-0010736)	U49	I.C.-SM QFP-L AT43 USB380 Processor USB 2.0
56	1	100-6014-00	(221-0010738)	U16	I.C.-SM SSOP PCM1755 24-Bit Audio DAC 16-PI
57	1	100-6010-00	(221-0010978)	U13	I.C.-SM SOJ IDT71V416S15Y SOJ-44
58	1	100-6011-00	(221-0010981)	U44	I.C.-SM TSOP S29GL256N11 256MB Flash
59	1	100-6015-00	(221-0011102)	U1	I.C.-SM SOIC 74LV273 SOIC-20
60	1	124-6002-00	(225-0003581)	U54	I.C.-Tht. TO-220 LM317T Adjustable Volt Reg.
61	2	100-5016-20	(225-0003635)	U50, U51	I.C.-Tht. Pentawat TDA2030 18W Amplifier
62	1	124-6003-00	(225-0006921)	U33	I.C.-Tht. TO-220 LM340T 5V 1A Volt Regulator
63	1	077-5217-00	(301-0004285)	SU9	Socket DIP/SIP 32-Pin, Tin, .6, Dip
64	2	n/a	(303-0005944)	TP1, TP2	Test Pt. All Test Point, White, Miniature
65	1	045-	(315-0003511)	JP1	Con.-Tht. Header 2 Pin, 1 Row, VT, Tin, .1"
66	1	045-	(315-0004097)	J11	Con.-Tht. Header 6 Pin, 1 Row, VT, Tin, .156"
67	1	045-	(315-0004121)	J1	Con.-Tht. Header 9 Pin, 1 Row, VT, Tin, .156"
68	4	045-	(315-0004122)	J3, J6, J12, J13	Con.-Tht. Hdr. 10 Pin, 1 Row, VT, Tin, .156"
69	1	045-	(315-0004124)	J8	Con.-Tht. Header 6 Pin, 1 Row, VT, Tin, .1"
70	1	045-	(315-0006776)	J14	Con.-Tht. Hdr. 6 Pos. Phone Jack, Vertical
71	1	045-	(315-0006910)	J9	Con.-Tht. Header 20 Pin, 2 Row, VT, Tin, .1"
72	1	045-	(315-0009252)	J10	Con.-Tht. Header 4 Pin, 1 Row, VT, Tin, .156"
73	1	045-	(315-0009520)	J2	Con.-Tht. Hdr. 12 Pin, 1 Row, VT, Tin, .156"
74	1	045-	(315-0009626)	J15	Con.-Tht. 4 Pos. USB Recpt, VT, WHT/BLK
75	1	045-	(315-0009627)	J4	Con.-Tht. D-Sub 9 Pos, VT, w/lock & Hex Sc.
76	1	045-	(315-0010979)	J5	Con.-Tht. Hdr. 14 Pin, 2 Row, VT, Gold, .1" Shrou.
77	1	140-6000-00	(401-0007295)	Y2	XTAL.-SM 32.768MHz Cl 12.5 FSR327
78	1	140-6001-00	(401-0010737)	Y3	XTAL.-SM 600MHz 20PF
79	1	140-6002-00	(403-0005489)	Y1	Osc.-SM SO 400MHz 5V Tristate CMOS
80	1	515-	(421-0010979)	B1	Battery (Coin Cell 24.5mm) Holder with clip
81	1	000-0644-01	(421-0010980)	*for* B1	Coin Cell 3V 265maH 24X3 mm (CR2430)
82	1	165-6003-00	(425-0005320)	LED1	LED SM Green 0805 LED
83	1	165-6004-00	(425-0010803)	LED3	LED SM Dual Red/Green 1210 Top
84	1	182-5002-00	(450-0004750)	SW1	8-Position Dip Switch Spst. 16 Pin X8 Slide 5VDC 100ma
85	1	182-5001-00	(450-0004752)	S1	White Push-Button Reset Switch Spst. 4 Pin Momentary 24VDC 50ma
86	2	127-5001-00	(461-0003520)	*for* U33, U34	Heatsink All Vert Mount Ba TO-220
87	2	127-5001-01	(461-0003528)	*for* U50, U51	Heatsink All Vert Mount Ba TO-220
88	4	237-5909-01	(504-0004604)	*for Heat Sinks* U33, U34, U50, U51	#4-40 X 3/8" PPH MS Sems (Zinc) Screw
89	4	240-5318-00	(503-0004457)	*for Heat Sinks* U33, U34, U50, U51	#4-40 Keps Nut
90	4	254-5007-05	(507-0004547)	*for* Mntg. Holes (Mfg. .169" I.D. X 9/32" O.D. X 5/16")	5/16" Slf. Rtn. Spacer White

Display Power Supply PCB (520-5138-00) Schematic

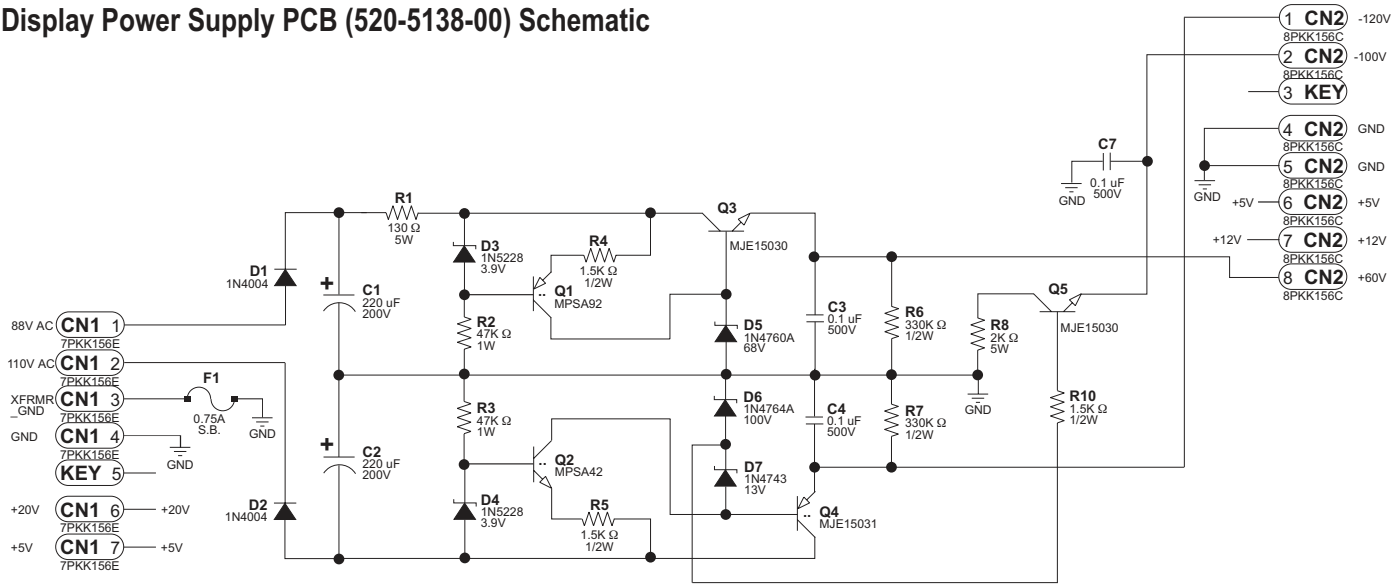

Display Power Supply PCB (520-5138-00) Component Layout & Parts

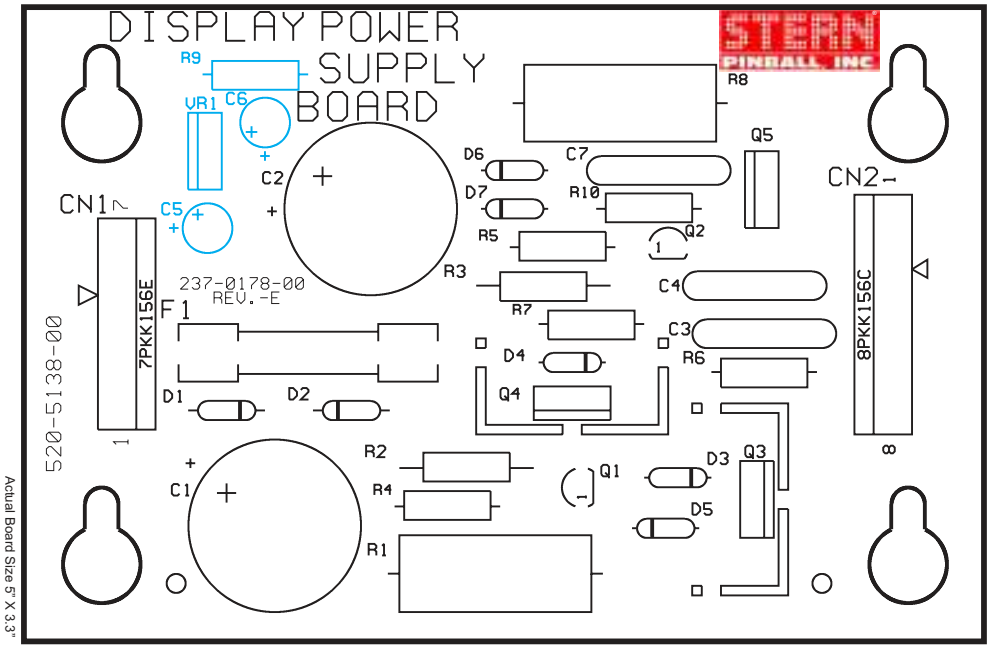

ITEM	QTY	PART NUMBER	REF-DESIGNATOR	DESCRIPTION (NS = Not Stuffed)
—	1	**520-5138-00**	**Display Power Supply PCB**	*(includes Items **1-2** + **4-24**)*
1	2	125-5044-00	C1, C2	220uF, 200v, Radial Lytic Cap.
2	3	125-5035-00	C3, C4, C7	0.1uF, 500v, Ceramic Disk Cap.
3	0	125-5003-00	(C5, C6: NS)	22uF, 35v, Rad Lytic Cap
4	1	045-5015-07	CN1	7PKK156E (PIN5=KEY)
5	1	045-5015-08	CN2	8PKK156 (PIN3=KEY)
6	2	112-5003-00	D1, D2	1N4004, Diode
7	2	112-0053-00	D3, D4	1N5228, 3.9v, Diode
8	1	112-0062-00	D5	1N4760A, 68v, Diode
9	1	112-0049-00A	D6	1N4764A, 100v, Diode
10	1	112-0061-00	D7	1N4743, 13v, Diode
11	1	200-5000-17	F1	3/4A (0.75A) S.B. Fuse
12	2	205-0004-00	F1	Fuse Clip
13	1	110-0100-00	Q1	MPSA92, Transistor
14	1	110-0082-00	Q2	MPSA42, Transistor
15	2	110-0101-00	Q3, Q5	MJE15030, Transistor
16	2	535-5000-11	Q3, Q4	Heatsinks - AAVID #563002
17	2	240-5008-00	Q3, Q4	#6-32 KEPS Nut
18	2	237-5501-00	Q3, Q4	#6-32 X 3/8" PPH Screw
19	1	110-0103-00	Q4	MJE15031, Transistor
20	1	121-5061-00	R1	130 Ω Resistor SMT, 5W
21	2	121-5060-00	R2, R3	47K Ω Resistor SMT, 1W
22	3	121-5038-00	R4, R5, R10	1.5K Ω Resistor SMT, 1/2W (R9: NS)
23	2	121-5059-00	R6, R7	330K Ω Resistor SMT, 1/2W
24	1	121-5062-00	R8	2K Ω Resistor SMT, 5W
25	0	124-5003-00	(VR1: NS)	7812CT

Playfield Switches OPTO Transceiver PCBs (500-6775-00 & -01) Schematic

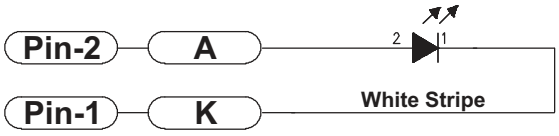

Mini PCB
OPTO 12"/15" Lead
(Black Bracket)
500-6775-00/-01

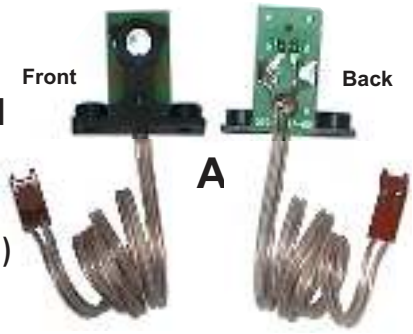

Playfield Switches OPTO Transceiver PCBs (500-6775-00 & -01) Component Layout & Parts

ITEM	QTY	PART NUMBER	REF-DESIGNATOR	DESCRIPTION
A, B & D	**3 pair**	**500-6775-00**	**Mini OPTO Transceiver PCB Assembly** *(Items **A** PCB + **B** + **C**)*	
A, C & D	**1 pair**	**500-6775-01**	**Mini OPTO Transceiver PCB Assembly** *(Items **A** PCB + **B** + **C**)*	
A	1	520-5237-00	**Mini OPTO Transceiver PCB**	*(includes Items **A-1 – A-3**)*
A-1	1	545-6092-00		Black Bracket (Plastic) Holder
A-2	1	237-5909-00		#4-40 X 1/4 PPH Screw
A-3	1	**165-5052-00**		**LED (Ultra Bright Red)**
B	1	601-5023-12	K, A	12" Speaker Wire (1-Side White Stripe)
C	1	601-5023-15	K, A	15" Speaker Wire (1-Side White Stripe)
D	1	045-5020-02	*Note White Strip to Pin-1*	2-Pin Cn., .100 **KK Cmp Trm** Molex 08-50-0113

Playfield OPTO Transmitter / Receiver Amplifier PCB (520-5239-01) Schematic

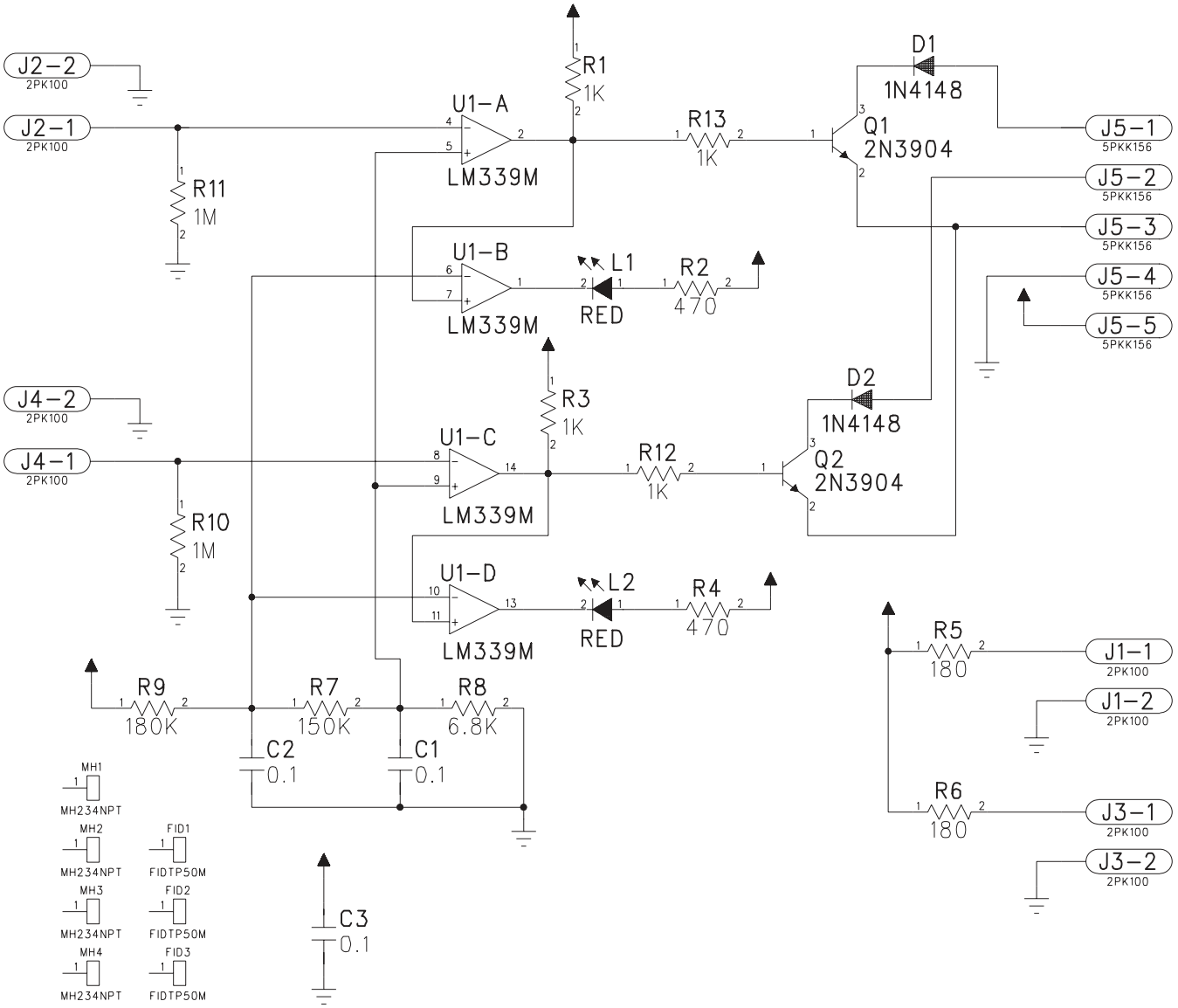

Playfield OPTO Transmitter/Receiver Amplifier PCB (520-5239-01) Component Layout & Parts
(for OPTO Switches 52 – 55)

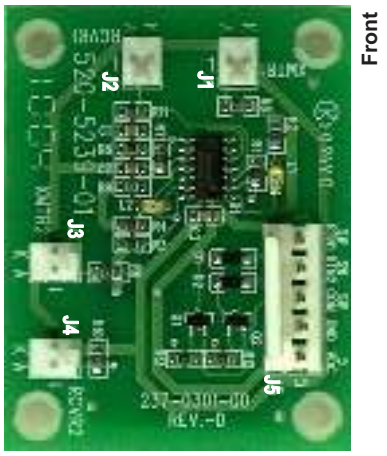

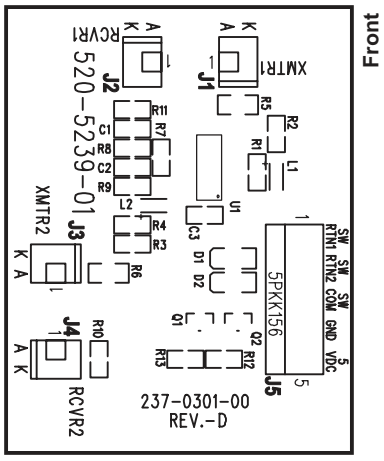

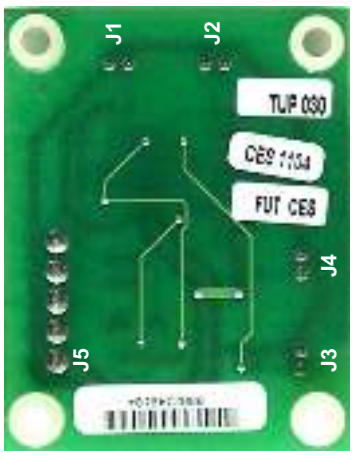

ITEM	QTY	PART NUMBER	REF-DESIGNATOR	DESCRIPTION
—	**2**	**520-5239-01**	**OPTO Transmitter/Receiver Amplifier PCB**	*(incl. Items **1–14** + Item **15** spacers)*
1	1		R7	SMT 150K Ω 1/10W Resistor 805, 5%
2	2		R5, R6	SMT 180 Ω 1/10W Resistor 805, 5%
3	1		R9	SMT 180K Ω 1/10W Resistor 805, 5%
4	4	*If a part is required*	R1, R3, R12, R13	SMT 1K Ω 1/10W Resistor 805, 5%
5	2	*where a part number*	R10, R11	SMT 1M Ω 1/10W Resistor 805, 5%
6	2	*is not provided, call*	R2, R4	SMT 470 Ω 1/10W Resistor 805, 5%
7	1	*Technical Support*	R8	SMT 6.8K Ω 1/10W Resistor 805, 5%
8	3	*(see back of cover).*	C1, C2, C3	SMT Cer. .1uF 50v Cap., 10% X7R
9	2		D1, D2	1N4148W, Diode, 100v, 350MW
10	2		Q1, Q2	MMST3904, NPN, 40v, .02A
11	1		U1	LM339M, Low Power Offset QUA
12	4	Mfg. 22-23-2021	J1, J2, J3, J4	2-Pin, 0.1 Header (1 Row, VT, Tin)
13	1	Mfg. 640445-5	J5	5-Pin, .156 Header (1 Row, VT, Tin)
14	2	Mfg. **APT3216SURC**	L1, L2	LEDD-SMT, Red 1206
15	4		n/a	**Spacer (Nylon), .153" ID X 9/32" OD X 3/8"**

Playfield OPTO Transmitter/Receiver Amplifier PCB (520-5239-01) Wiring (General)
(for PCB 1: OPTO Switches 52 & 53 /// PCB 2: OPTO Switches 54 & 55)

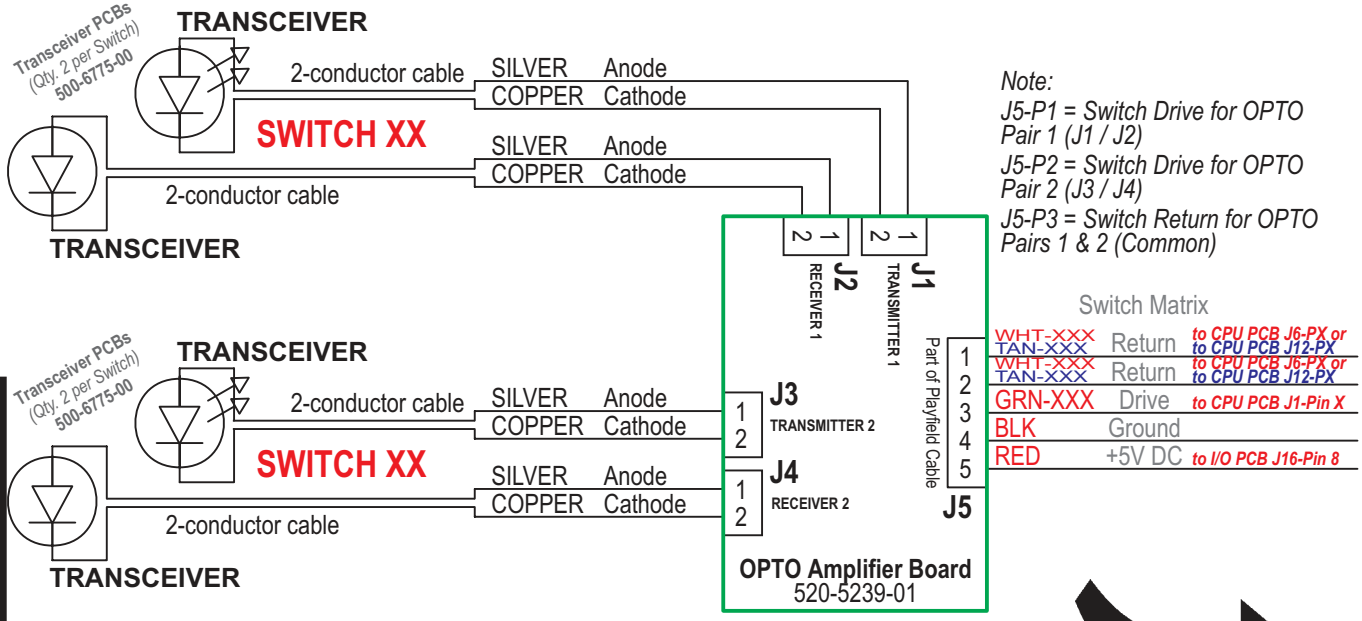

For details on Board Wiring Configuration for PCBs 1 – 2, see opposite pages.

Playfield OPTO Transmitter/Receiver Amplifier PCB (520-5239-01) Wiring (Game Specific)

PCB 1: OPTO Switches 52 [Mini-Playfield Right Orbit] & 53 [Mini-Playfield Left Orbit]

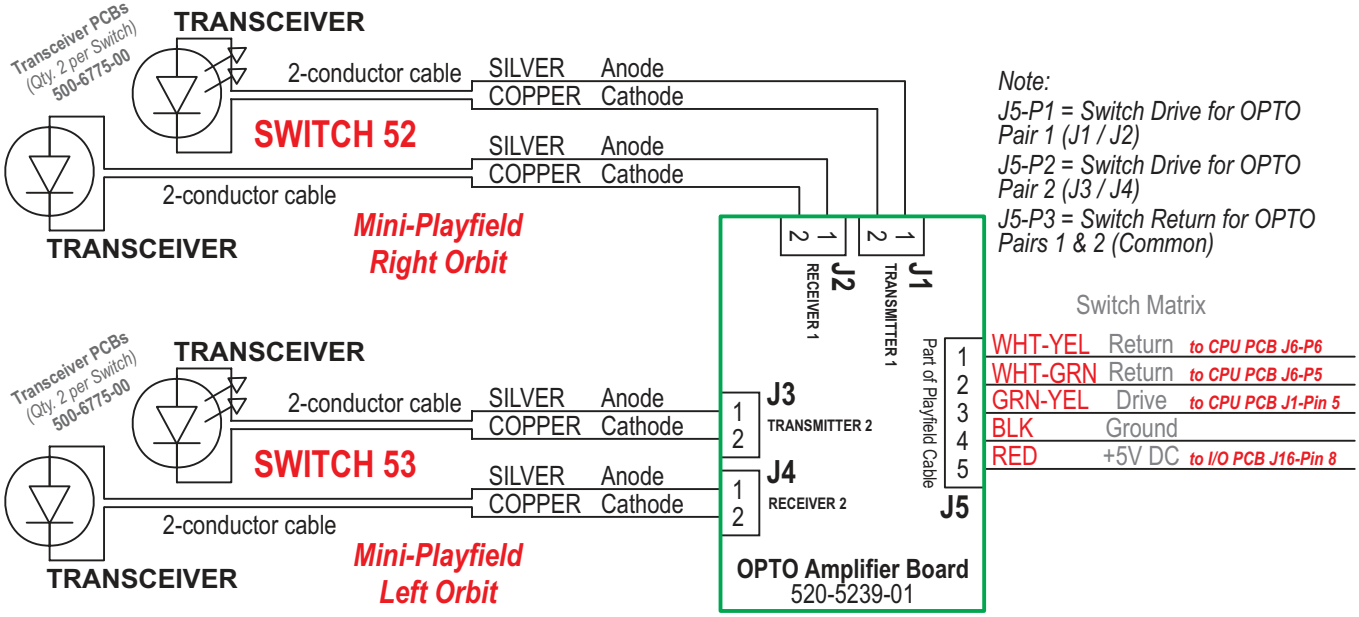

Playfield OPTO Transmitter/Receiver Amplifier PCB (520-5239-01) Wiring (Game Specific)

PCB 2: OPTO Switches 54 [Mini-Playfield Mini-Ramp] & 55 [Mini-Playfield Mini-Shooter]

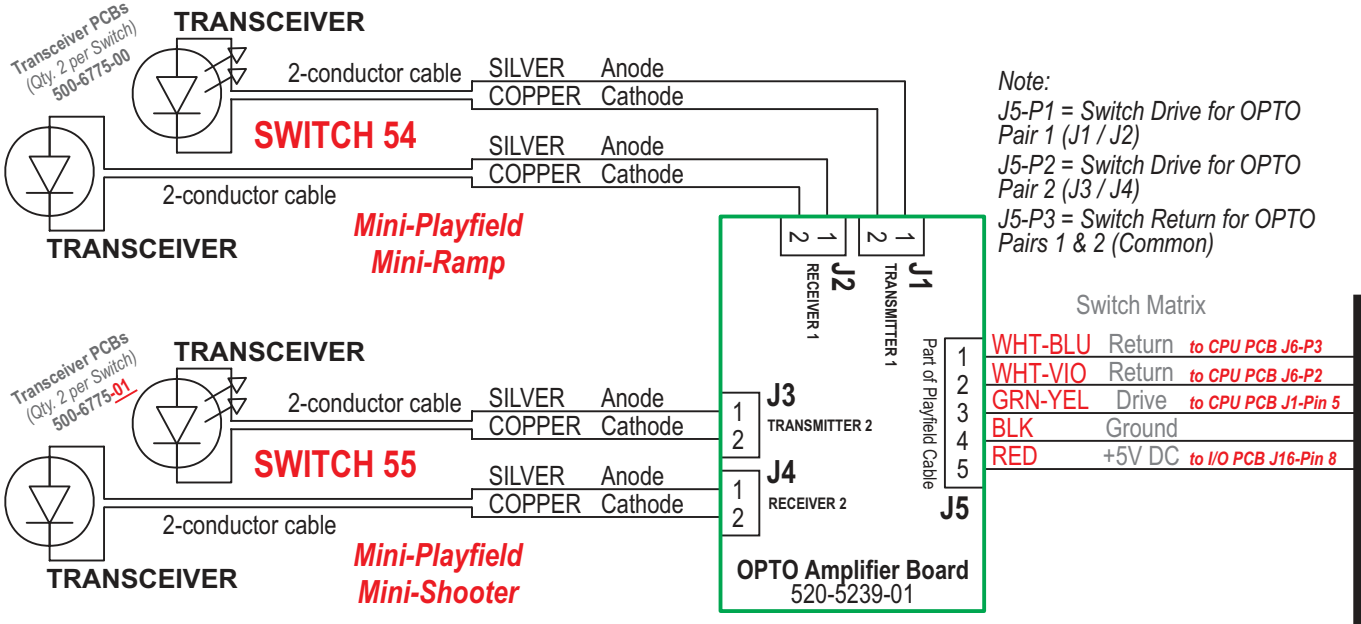

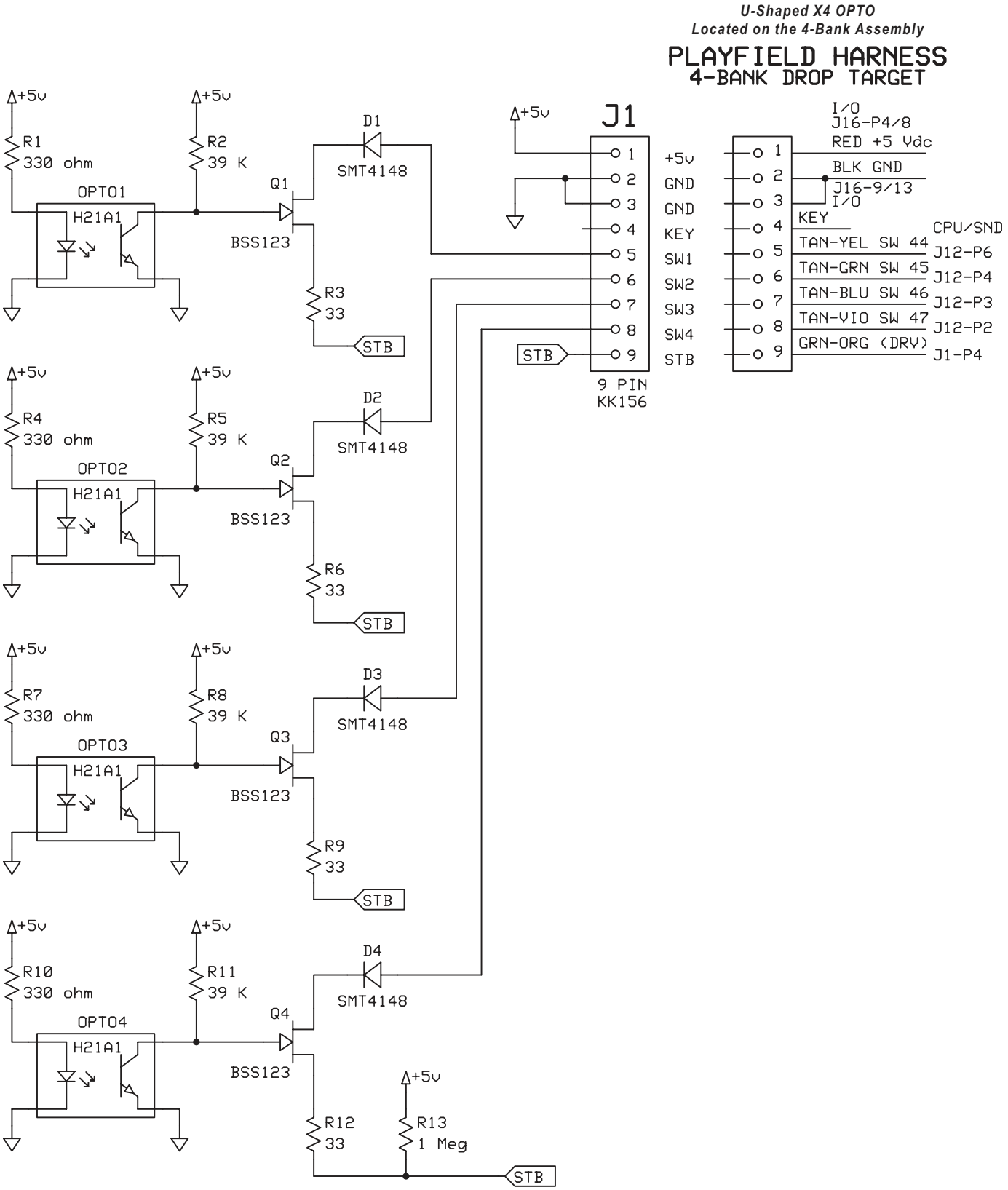

(Component Layout & Parts Next Page)

OPTO Interrupter PCB (520-5252-04) Component Layout & Parts (4-Bank Drop Target)

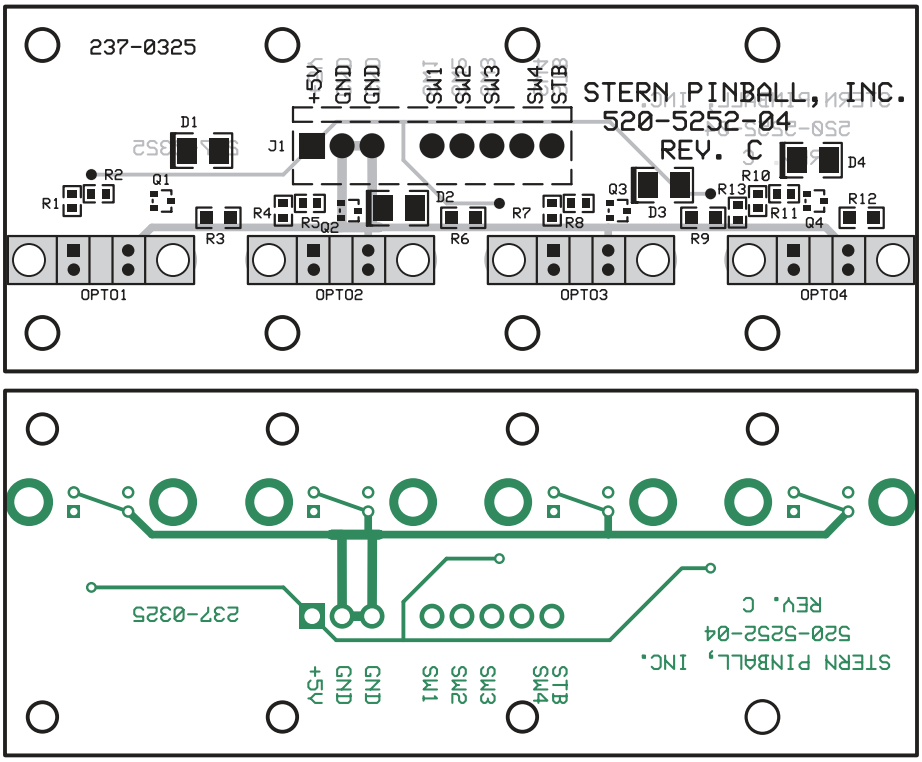

ITEM	QTY	PART NUMBER	REF-DESIGNATOR	DESCRIPTION
—	1	**520-5252-04**	**4-Bank OPTO Interrupter PCB**	*(includes Items **1–6**)*
1	4		D1, D2, D3, D4	1N4148W, Diode, 100v, 350mW SMT
2	4	*If a part is required where a part number is not provided, call Technical Support (see back of cover).*	OPTO1, OPTO2, OPTO3, OPTO4	H21A1 Slotted Optical Switch (OPTO)
3	4		Q1, Q2, Q3, Q4	BSS123 MOSFET Transistor 100v 6Ω
4	3		R1, R4, R7 *(note diff. between 520-5252-01 & 520-5252-04)*	330 Ω Resistor SMT
5	3		R2, R5, R8	39K Ω Resistor SMT
6	3		R3, R6, R9	33 Ω Resistor SMT

Note: *For the securing hardware of this PCB, see the 4-Bank Drop Target Assembly Drawing in Section 4, Chapter 2 (Blue Pages).*

OPTO Interrupter (520-5252-01) Schematic, Component Layout & Parts (1-Bank Drop Target)
(for OPTO Switch 9)

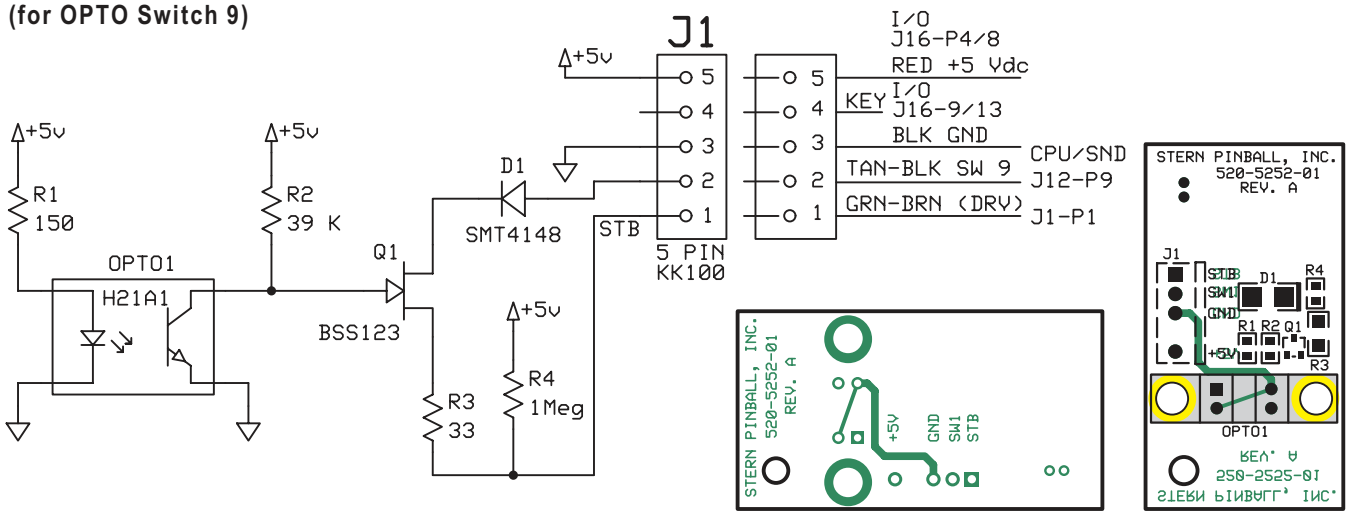

ITEM	QTY	PART NUMBER	REF-DESIGNATOR	DESCRIPTION
—	1	**520-5252-01**	**1-Bank OPTO Interrupter PCB**	*(includes Items **1–6**)*
1	1		D1	1N4148W, Diode, 100v, 350mW SMT
2	1	*If a part is required where a part number is not provided, call Technical Support (see back of cover).*	OPTO1	H21A1 Slotted Optical Switch (OPTO)
3	1		Q1	BSS123 MOSFET Transistor 100v 6Ω
4	1		R1 *(note difference between 520-5252-01 & 520-5252-04)*	150 Ω Resistor SMT
5	1		R2	39K Ω Resistor SMT
6	1		R3	33 Ω Resistor SMT

Note: *For the securing hardware of this PCB, see the 1-Bank Drop Target Assembly Drawing in Section 4, Chapter 2 (Blue Pages).*

Theory Of Operation

Voltage generated by **Piezo-electric Crystal** will cause the Op-Amp **IC1B** to change state when it is greater than 1.2V. This output is fed to the pulse stretching network of **R4**, **R16** and **C1**. This signal is sent to **IC1D** which lights **LED1** when the output is negative. The column strobe from the CPU is sent to **IC1C**, which will change state when it is actively strobed low. Signals from **IC1B** and **IC1C** are sent to **IC1A** and combined. The output of **IC1A** to the Row Return Line (Switch Matrix) will only be low when the switch is active and the column strobe is low, this prevents false switches from being read in the *Switch Matrix*. *Switch Numbers is this games are 50 & 51.*

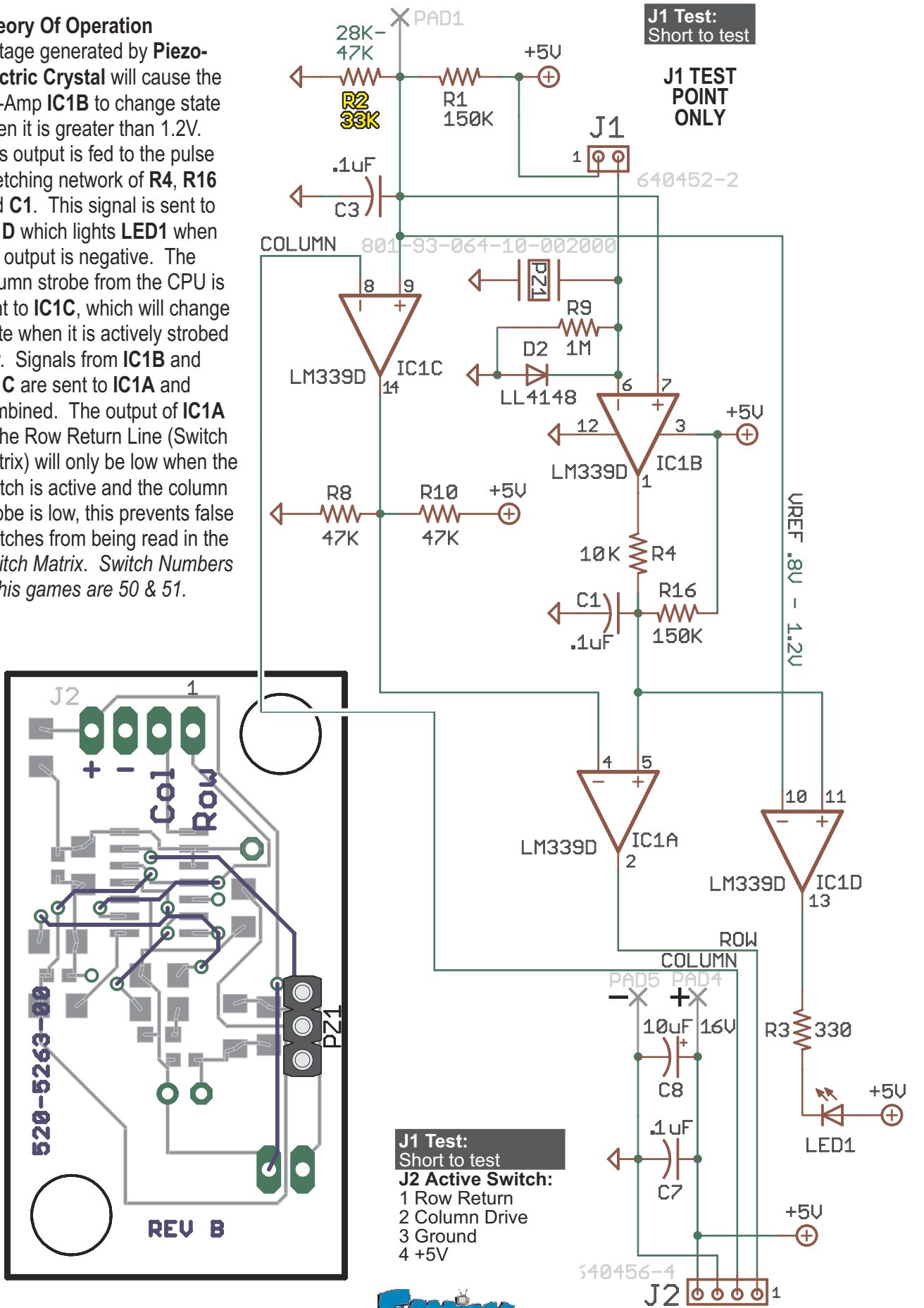

Stand-Up Target Sensor PCB (511-5042-01) Component Layout & Parts

Note: If replacing sensor, order 511-5003-00 [C-1 – C-3] to get sensor applied correctly at the factory. *Mini Stand-Up Target Steel Bracket + Piezo Sensor Assembly*

Note on Production Games made in 2008+: *The Stand-Up Target Sensor PCB, Piezo Switch (X2) & Brackets (see below) have been replaced by* ***511-5081-00*** *(Mini-Stand-Up Target, 500-7098-00 + Diode, 112-5003-00). If your Mini-Pinball have the Piezo Switches and you would like to convert to Mechanical Switches, order the* ***OPTIONAL CONVERSION KIT 502-5055-93*** *which contains 1 each Mechanical Switches with diode, cable, connector & Z-Header (511-5081-93) for easy plug-and-play set-up.* ***If your game already has the mechanical switches soldered without a connector, order replacment Part Number 511-5081-00.***

SWITCHES 50 & 51
Mini-Playfield Stand-Up Targets

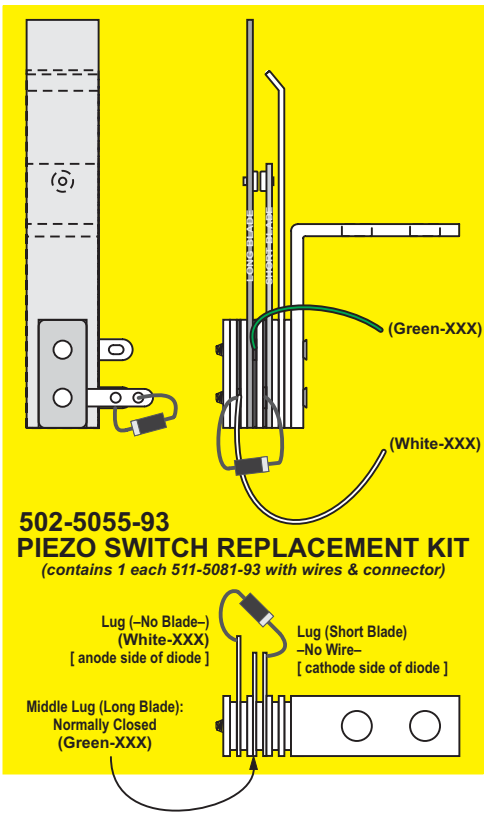

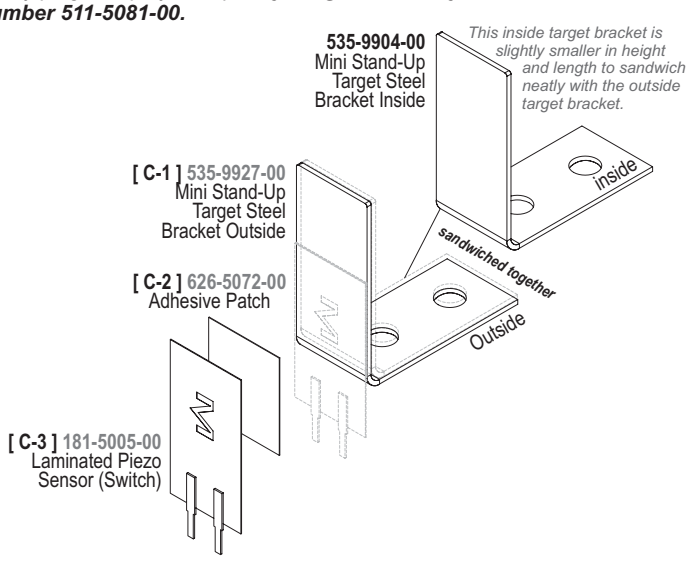

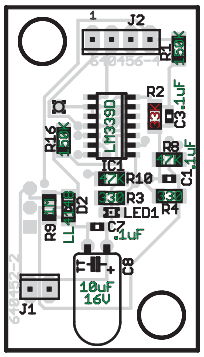
Top (Component) Side

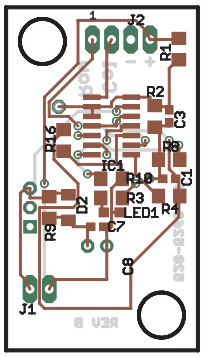
Trace (Component) Side

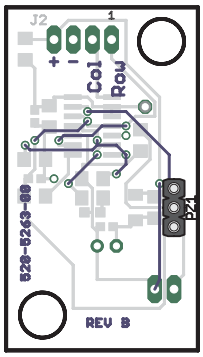

Bottom (Socket) Side

ITEM	QTY	PART NUMBER	REF-DESIGNATOR	DESCRIPTION (value, device)
A+B	**2**	**511-5042-00**	**Stand-Up Target Sensor PCB Sub-Asm.** *(Item **A** PCB + Item **B** Spacers ONLY)*	
A–F	**2**	**511-5042-01**	**Stand-Up Target Sensor PCB Assembly** *(Item **A** PCB + Item **B** Spacers **+** Items **C & D**)*	
A	**1**	**520-5263-00**	**Stand-Up Target Sensor PCB**	*(includes Items **A1–A13**)*
A-1	1		LED1	CHIP LED 1206 SMD
A-2	3		C1, C3, C7	.1uF, Capacitor C-USC0603
A-3	1		R9	1M Ω Resistor SMT R-US_R1206
A-4	1		C8	10uF 16V, Capacitor CPOL-USE2-5
A-5	1		R2 *(note difference between 520-5262-00 & 520-5263-00)*	33K Ω Resistor SMT, R-US_R1206
A-6	2		R8, R10	47K Ω Resistor SMT, R-US_R1206
A-7	2		R1, R16	150K Ω Resistor SMT, R-US_R1206
A-8	1	*If a part is required where a part number is not provided, call Technical Support (see back of cover).*	R3	330 Ω Resistor SMT, R-US_R1206
A-9	1		R4	10K Ω Resistor SMT, R-US_R1206
A-10	1		PZ1 *(note difference between 520-5262-00 & 520-5263-00)*	SIP (3-Pin) Socket, .1" **Low Prfl.** .165" Ht. *Mfg. Mill-Max: 801-93-064-10-002000*
A-11	1		J1	2-Pin Conn., 640452-2, MA02-1
A-12	1		J2	4-Pin Conn., 640456-4, MTA04-100
A-13	1		D2	LL4148, DIODE-MINIMELF
A-14	4		IC1A, IC1B, IC1C, IC1D	LM339D, Quad Voltage Comparator
B	2	254-5007-00		Spacer, Slf. Rtn. 5/8" White
			Items A & B secured to playfield by #6 X 1-1/4" SHWH AB (Zinc) (Qty. 1/per) (237-5959-00)	
C	1	**511-5003-00**	**Mini Stand-Up Target Steel Bracket + Piezo Sensor Asm.** *(includes Items **C-1 – C-3**)*	
C-1	1	535-9927-00]		Mini Stand-Up Target Steel Brkt. Outside
C-2	1	626-5072-00]— *Use **511-5003-00** for Items **C-1 – C-3** assembled correctly!*		Adhesive Patch (.5" Sq.) L
C-3	1	181-5005-00]		Piezo Sensor, LDT0-028K/L w/Crimps *.52" X .98" Laminated* Mfg. PN 0-1002794-0
D	1	535-9904-00		Mini Stand-Up Target Steel Brkt. Inside
			Items C & D are secured to playfield by #8 X 1/2" SHWH AB (Zinc) (Qty. 2) (234-5101-00)	

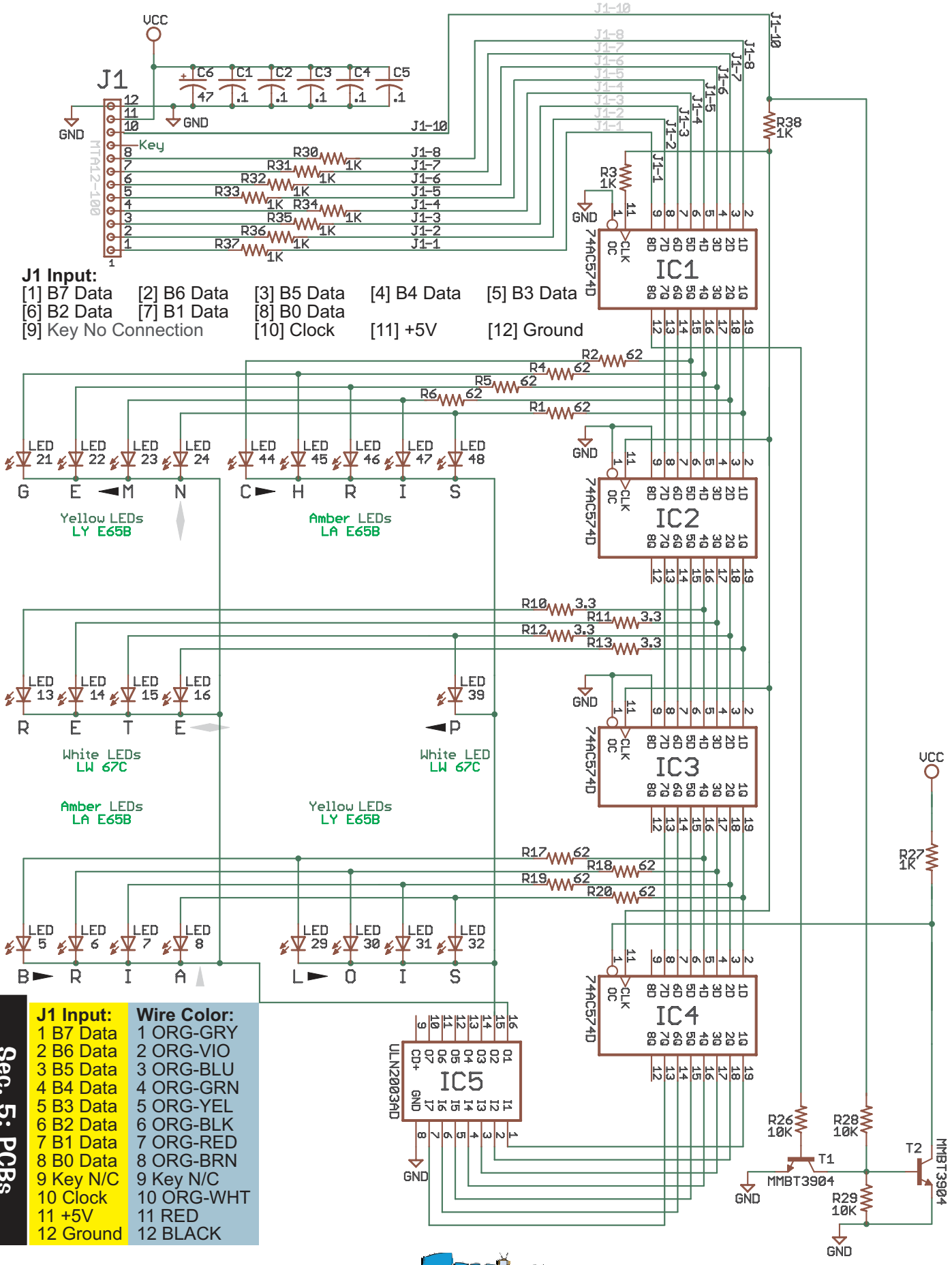

J1 Input:

[1] B7 Data [2] B6 Data [3] B5 Data [4] B4 Data [5] B3 Data
[6] B2 Data [7] B1 Data [8] B0 Data
[9] Key No Connection [10] Clock [11] +5V [12] Ground

J1 Input:	Wire Color:
1 B7 Data	1 ORG-GRY
2 B6 Data	2 ORG-VIO
3 B5 Data	3 ORG-BLU
4 B4 Data	4 ORG-GRN
5 B3 Data	5 ORG-YEL
6 B2 Data	6 ORG-BLK
7 B1 Data	7 ORG-RED
8 B0 Data	8 ORG-BRN
9 Key N/C	9 Key N/C
10 Clock	10 ORG-WHT
11 +5V	11 RED
12 Ground	12 BLACK

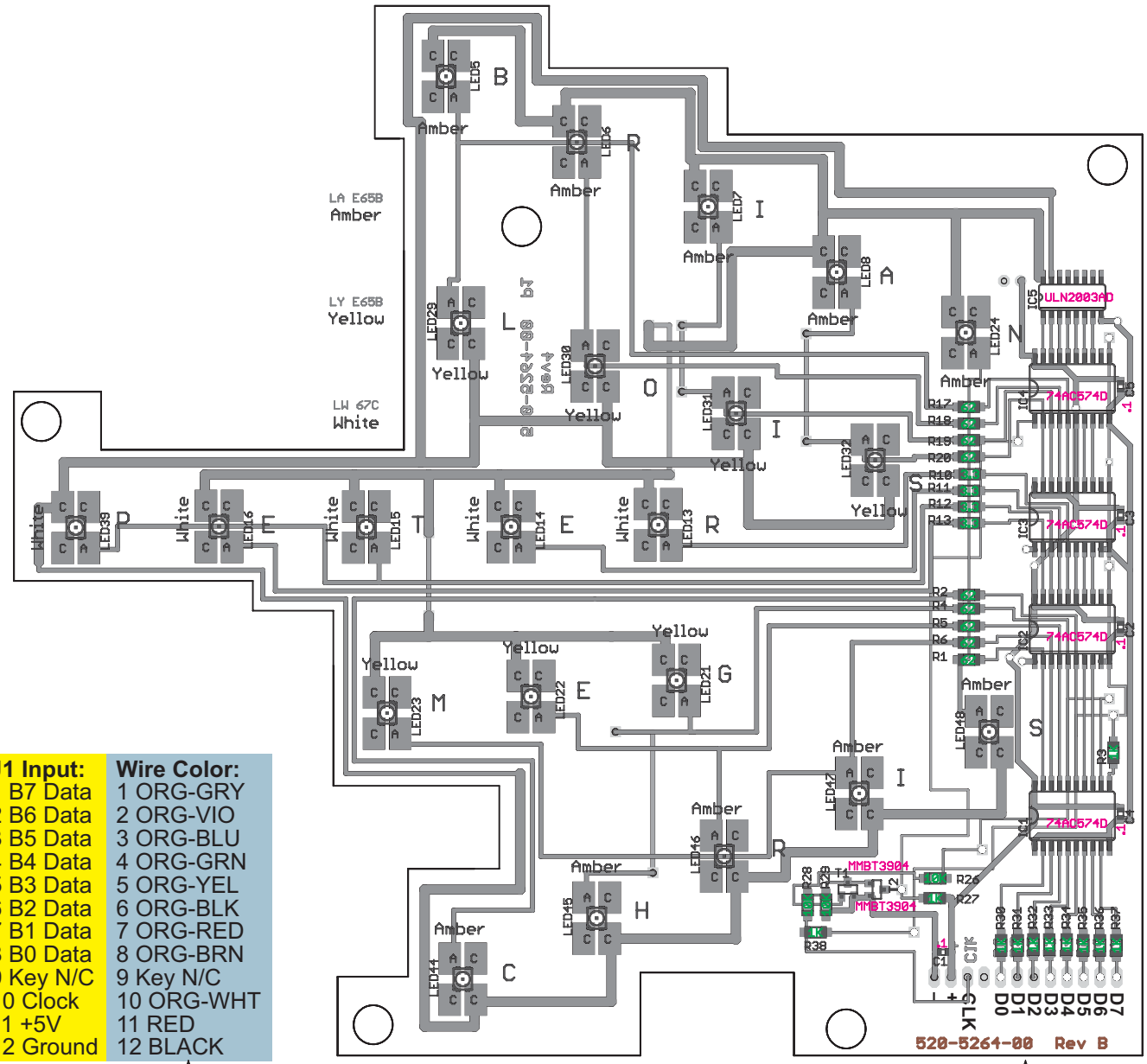

J1 Input:	Wire Color:
1 B7 Data	1 ORG-GRY
2 B6 Data	2 ORG-VIO
3 B5 Data	3 ORG-BLU
4 B4 Data	4 ORG-GRN
5 B3 Data	5 ORG-YEL
6 B2 Data	6 ORG-BLK
7 B1 Data	7 ORG-RED
8 B0 Data	8 ORG-BRN
9 Key N/C	9 Key N/C
10 Clock	10 ORG-WHT
11 +5V	11 RED
12 Ground	12 BLACK

ITEM	QTY	PART NUMBER	REF-DESIGNATOR	DESCRIPTION (value, device)
A–B	**1**	**511-5046-00**	**Mini-Playfield LED Lamp PCB Assembly** *(Items **A** PCB + Items **B** Spacers)*	
A	**1**	**520-5264-00**	**Mini-Playfield LED Lamp PCB**	*(includes Items **A-1 – A-12**)*
A-1	11		R3, R27, R30, R31, R32, R33, R34, R35, R36, R37, R38	1K Ω Resistor SMT, R-US_R1206W
A-2	4		R10, R11, R12, R13	3.3 Ω Resistor SMT, R-US_R1206W
A-3	3		R26, R28, R29	10K Ω Resistor SMT, R-US_R1206W
A-4	9		R1, R2, R4, R5, R6, R17, R18, R19, R20	62 Ω Resistor SMT, R-US_R1206W
A-5	4	100-5036-00	IC1, IC2, IC3, IC4	74ACT574(D) SMD
A-6	10		LED5, LED6, LED7, LED8, LED24, LED44, LED45, LED46, LED47, LED48	LED Amber **Omron LA E65B, LEDP-LCC-4**
A-7	5		LED13, LED14, LED15, LED16, LED39	LED White **Omron LW 67C, LEDP-LCC-4**
A-8	7		LED21, LED22, LED23, LED29, LED30, LED31, LED32	LED Yellow **Omron LY E65B, LEDP-LCC-4**
A-9	2		T1, T2	MMBT3904 Transistor, **NPN SOT23 BEC**
A-10	1		IC5	ULN2003AD Transistor
A-11	1		C6	22uF Capacitor, CPOL-USE2.5-6
A-12	5		C1, C2, C3, C4, C5	.1uF Capacitor, C-USC0603
A-13	1		J1	1-640457-2 Right Angle Header
B	**5**	**254-5007-02**		Spacer, Slf. Rtn. 1/4" White

Items A+ B secured to playfield by #6 X 3/4" SHWH AB (Zinc) (Qty. 1/per) (234-5003-00)

Stepper Motor Controller PCB (520-5261-00) Schematic

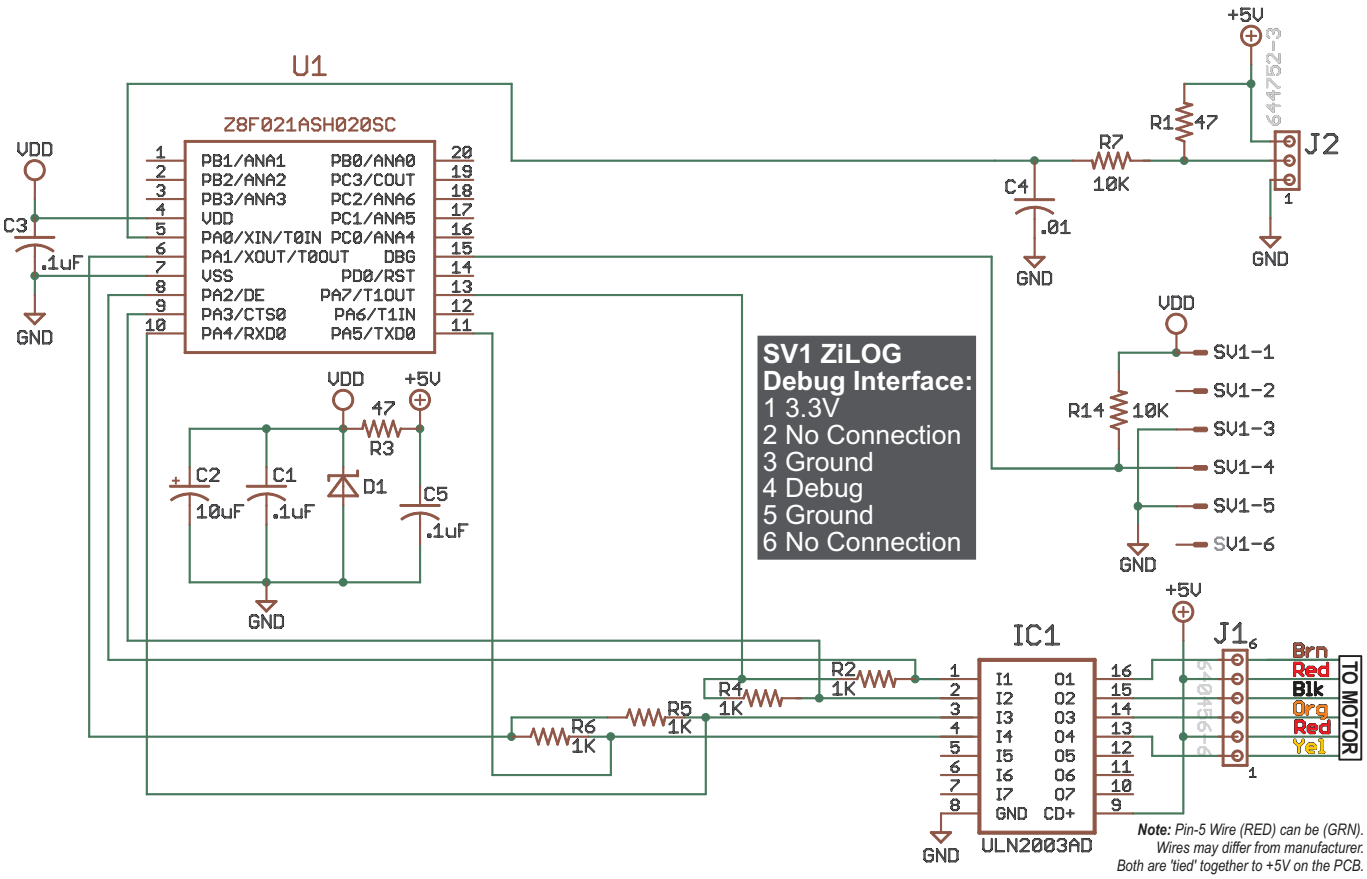

Stepper Motor Controller PCB Assembly (511-5045-00) Component Layout & Parts

J1 Motor Drive Wiring:
1 Motor Yellow
2 Motor **Red (+5V)**
3 Motor Orange
4 Motor **Black**
5 Motor **Red (+5V)**
6 Motor Brown

J2 Input Wiring:
1 Ground BLK
2 Coil Drive Q20 VIO-WHT: **I/O J7-P6**
3 +5V RED: I/O J16-P4>8

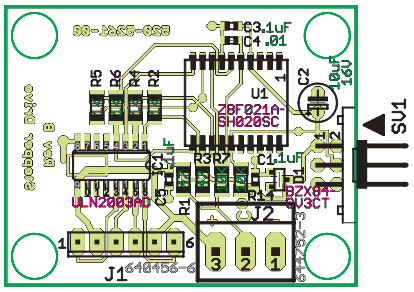

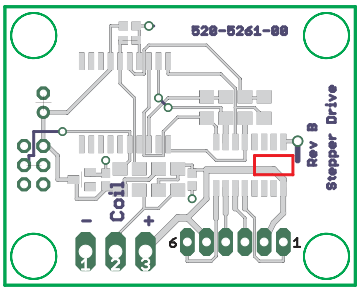

ITEM	QTY	PART NUMBER	REF-DESIGNATOR	DESCRIPTION (value, device)
A–B	**1**	**511-5045-00**	**Stepper Motor Controller PCB Assembly** *(Item **A** PCB + Item **B** Spacers)*	
A	**1**	**520-5261-00**	**Stepper Motor Controller PCB**	*(includes Items **A-1 – A-12**)*
A-1	1		SV1	929838-04-36, 3M Strip Conn.
A-2	1		C4	.01, Capacitor C-USC0603
A-3	3		C1, C3, C5	.1uF, Capacitor C-USC0603
A-4	4		R2, R4, R5, R6	1K Ω Resistor SMT, R-US_R1206
A-5	2		R7, R14 *(not screened on PCB, see above for location)*	10K Ω Resistor SMT, R-US_R1206
A-6	1	*If a part is required*	C2	10uF 16V, Capacitor CPOL-USE2.5-5
A-7	2	*where a part number*	R1, R3 *(not screened on PCB, see above for location)*	47 Ω Resistor SMT, R-US_R1206
A-8	1	*is not provided, call*	J1	6-Pin Conn., 640456-6, MTA06-100
A-9	1	*Technical Support*	J2	3-Pin Conn., 644752-3, MTA03-156
A-10	1	*(see back of cover).*	D1	Zener Diode, SOT-23 BZX84CV3CT
A-11	1		IC1	ULN2003AD Transistor
A-12	1		U1	Z8F021ASH020SC, ZiLOG XP
				(2KB Z8 Encore! XP® Flash MCU, 20 SOIC)
B	**4**	**254-5007-02**		Spacer, Slf. Rtn. 1/4" White

Items A+ B secured to playfield bu #6 X 3/4" SHWH AB (Zinc) (Qty. 1/per) (234-5003-00)

Auxiliary (3X Transistor) Driver PCB (in Backbox) with the Coin/Ticket Meter and Ticket Dispenser Wiring Diagram

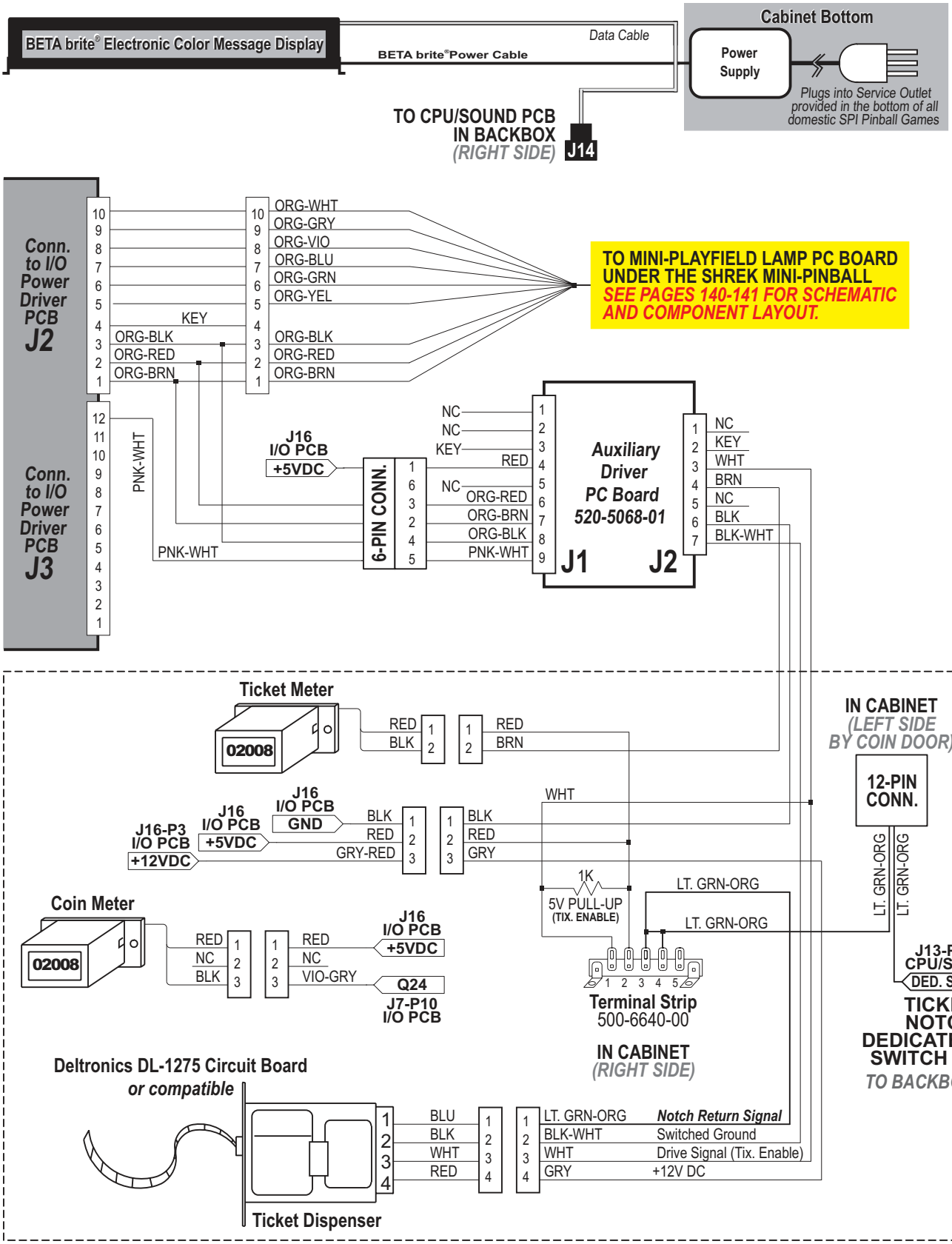

Auxiliary (3X Transistor) Driver PCB Schematic

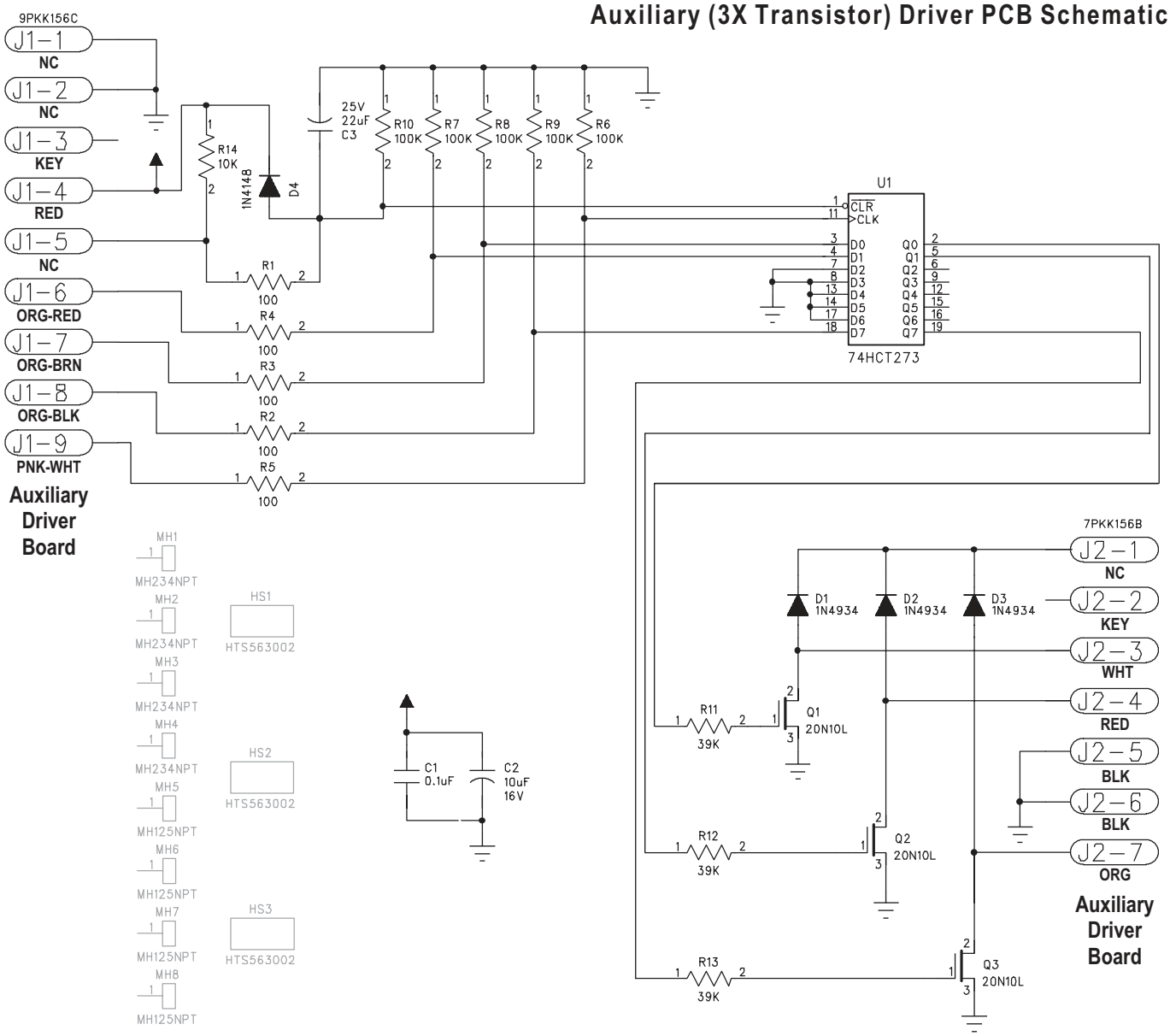

Auxiliary (3X Transistor) Driver PCB Component Layout

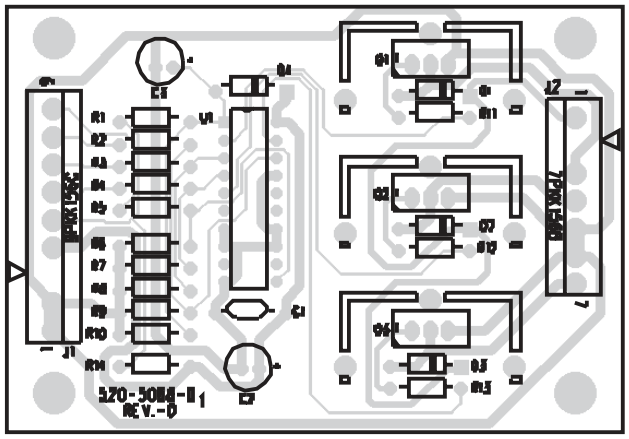

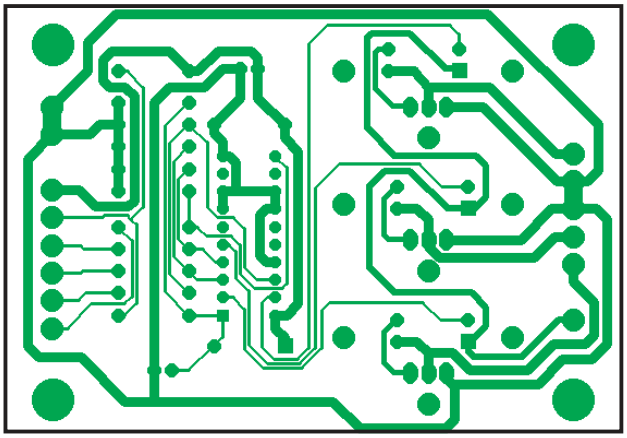

ITEM	QTY	PART NUMBER	REF-DESIGNATOR	DESCRIPTION
—	1	520-5068-01	Aux. / Solenoid Expander PCB (x3 Transistor)	Complete PCB Assembly