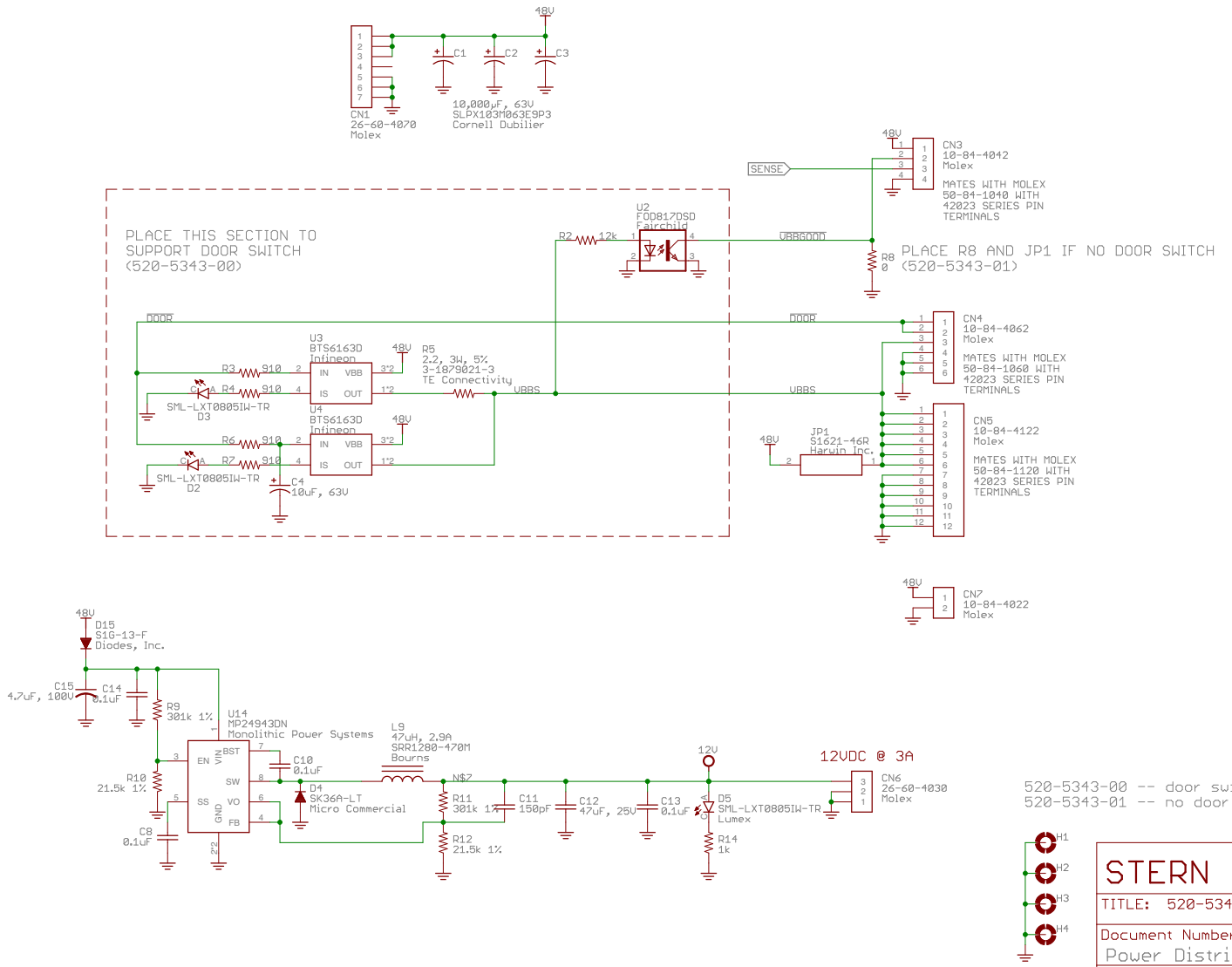

STERN Pinball

2001 Lunt Ave
Elk Grove, Ill 60007
708-345-7700

TITLE: 520-5343-0xH

Document Number: Power Distribution

REV:

Date: 10/5/18 1:15 PM

Sheet: 1/1