Find-It-In-Front:
Dr. Pinball Section
The inside cover & the front pages
DR. thru DR. covers the basics

Alot of uestions get answered here...

DR. DR. DR. DR.
NO YES END PREV QUIT

The Portals Service Menu,
Section 3, is your Technical Friend...

STERN PINBALL, INC.

http://www.SternPinball.com
2020 Janice Ave., Melrose Park, IL 60160

our Parts Sales & Technical Support Team

Joe Blackwell
DIRECTOR, Parts Sales & Technical Support

Susan White
Parts Sales MANAGER

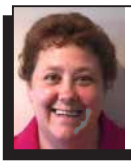
Patty Schraps
Parts Stockroom MANAGER

Jim Thornton
Technical Support ENGINEER

Chas Siddi i
Technical Support ENGINEER

Tashia Miles
Customer Service REPRESENTATIVE

Jay Alfer
Technical Support Documentation ADMINISTRATOR

1-800-KICKERS

Please call us at 1-800-542-5377 or
1-708-345-7700 for Technical Support.
Visit us at our Web Site www.SternPinball.com

Stern Pinball, Inc. 2001
All Rights Reserved. Printed in the U.S.A.

March 2001 Print Copy:
SPI PN-: *.PDF
780-5065-00

We have designed a ***new Drop Target Assembly*** (SPI Part Nº: 500-6345-XX Series) which was used in our previous games, **Striker Extreme** (4-Bank) and **Sharkey's Shootout** (7-Bank). This game, **High Roller Casino** (4-Bank) **DOES NOT UTILIZE TRIP COILS**, however, the **TRIP COIL MOUNTING BRACKET** still exists (Step 3 below). To shorten the learning curve, we have listed the procedure for replacing the targets below. The unit is extremely well built and solid and will reduce the number of service calls and maintenance involved with Drop Target Assemblies. Targets are still in that "wear-part" category so we felt it important to highlight this procedure.

Drop Target Replacement Procedure

(on a 1-, 4- or 7-Bank Drop Target 500-6345-XX Series Only)

1. DISCONNECT POWER AND REMOVE UNIT FROM PLAYFIELD.
2. REMOVE RED-MARKED SCREWS (FRONT & BACK AT TOP).
3. REMOVE TRIP COIL MOUNTING BRACKET (TOP PLATE).
4. REMOVE DROP TARGET SPRING. (REMOVAL OF COIL HOUSING BRACKET (3 SCREWS), WILL ONLY BE NECESSARY TO GAIN ACCESS TO HIDDEN SPRINGS).
5. REMOVE DROP TARGET FROM TOP END.
6. REASSEMBLE IN REVERSE ORDER.

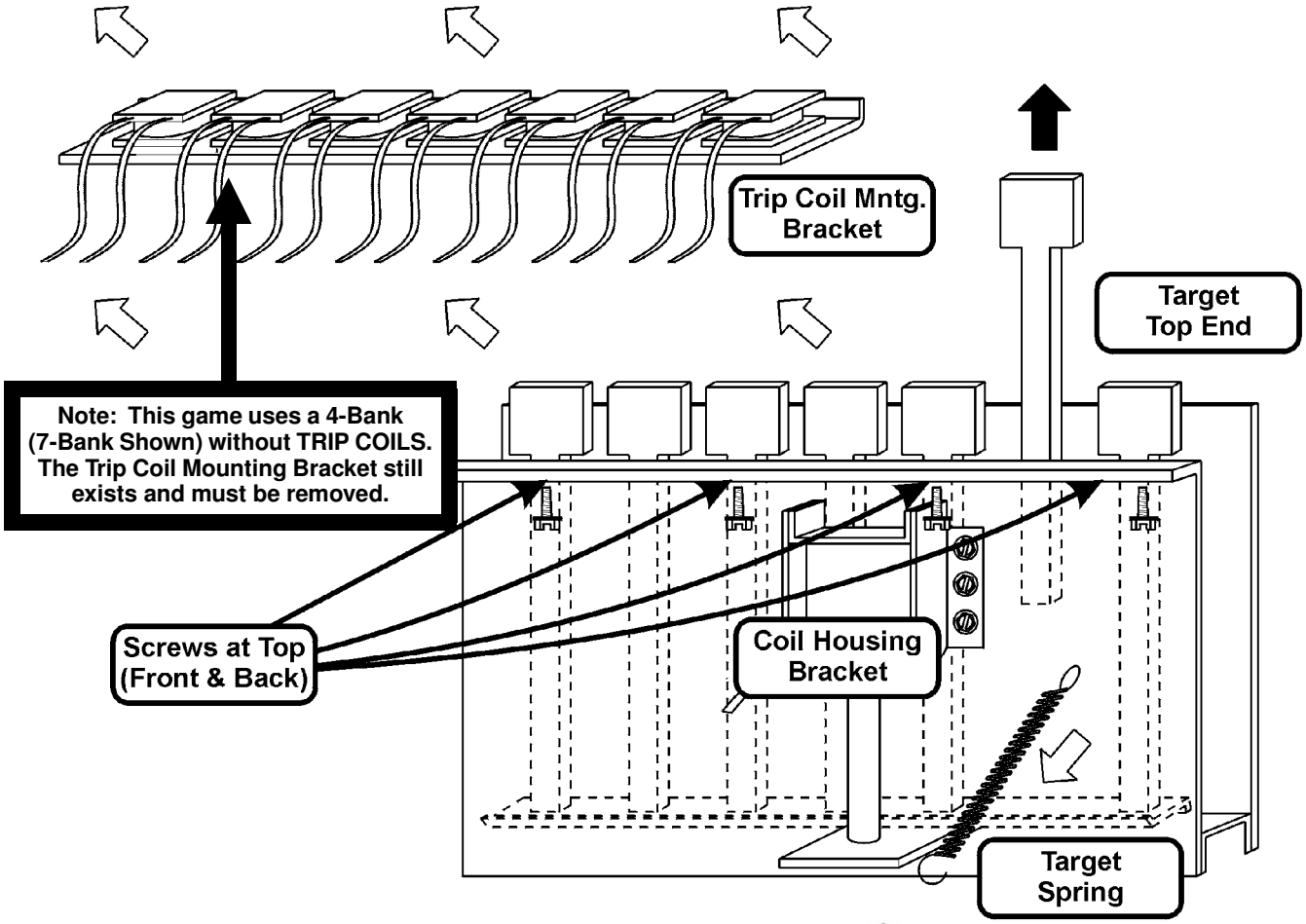

New to our Pinball Games?

Don't forget to go over **Section 3, Chapter 1, Portals™ Service Menu Introduction**. *If using Diagnostics...very useful!* Got confused? Comments? Questions? Call Technical Support at 800-542-5377 or 708-345-7700.

▼ BACKBOX LAYOUT LOCATIONS: Fuses, Bridges, Relays & ROMs ▼

CAUTION: *For continued protection against risk of fire, replace only with same type of fuse having the same electrical rating!*

QUICK REFERENCE FUSE CHART

Backbox Fuses			
LOC: DISPLAY POWER SUPPLY (P.S.) BOARD			
F1	¾A 250v S.B.	90v DC	High Voltage Display
LOC: I / O POWER DRIVER BOARD			
F6	7A 250v S.B.	50v DC	Primary High Power Coils/Flippers
F7	5A 250v S.B.	20v DC	Low Power Coils
F8	5A 250v S.B.	12v DC	Logic Power
F9	5A 250v S.B.	12v DC	Logic Power
F20	3A 250v S.B.	50v DC	Magnet(s)
F21	3A 250v S.B.	50v DC	Coils
F22	8A 250v S.B.	18v DC	Controlled Lamps
F23	4A 250v S.B.	5v DC	Logic
F24	5A 250v S.B.	6.3v AC	G.I. Lamps (BRN-WHT to WHT-BRN)
F25	5A 250v S.B.	6.3v AC	G.I. Lamps (YEL to WHT-YEL)
F26	5A 250v S.B.	6.3v AC	G.I. Lamps (GRN to WHT-GRN)
F27	5A 250v S.B.	6.3v AC	G.I. Lamps (VIO to WHT-VIO)
F28	3A 250v S.B.	24v AC	**Not Used / Spare**
Cabinet Fuses			
LOC: SERVICE (AC) OUTLET BOX (Cabinet Bottom)			
n/a	8A 250v S.B.	115v AC	Main Fuse Line (Domestic or USA)
n/a	5A 250v S.B.	220v AC	Main Fuse Line (International)
High Roller Casino P/F Fuses			
LOC: UNDER PLAYFIELD (By Assemblies Listed)			
n/a	3A 250v S.B.	50v DC	Rt. Flipper (BLU-YEL⇆RED-YEL)
n/a	3A 250v S.B.	50v DC	Lt. Flipper (GRY-YEL⇆RED-YEL)
n/a	3A 250v S.B.	50v DC	Ramp Diverter (GRY-YEL⇆RED-YEL)

For Backbox & Cabinet General Parts, review Section 4, Chapter 1, Parts Identification & Location (The Pink Pages).
For Schematics and/or Component Parts on above Boards, review Section 5, Chapter 4, Printed Circuit Boards (The Yellow Pages).

Display Power Supply Board

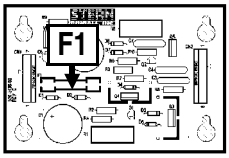

CPU / Sound Board

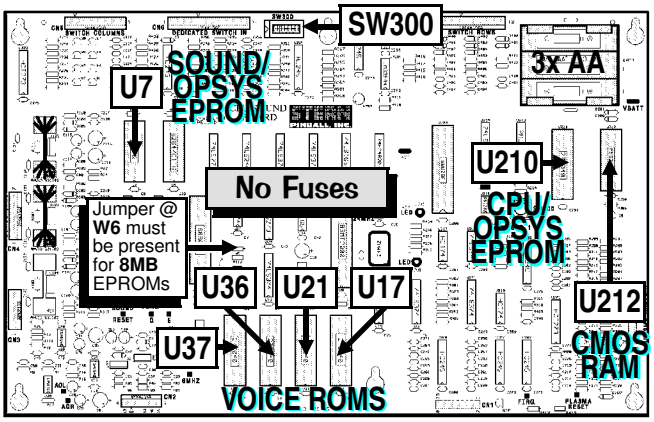

I/O Power Driver Board

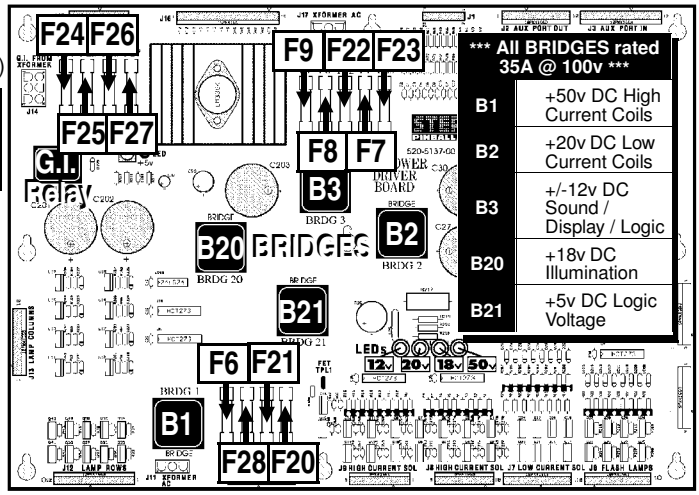

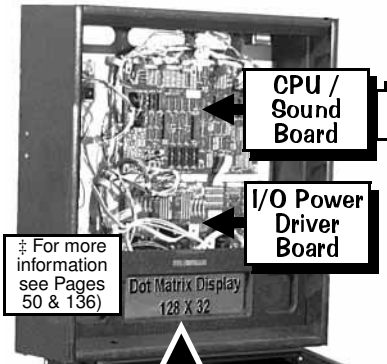

‡ For more information see Pages 50 & 136)

Display Controller Board
(Mounted behind the Dot Matrix Display)

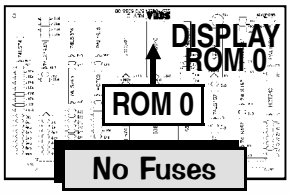

No Fuses

The **Display Controller Board** (holds the Display ROM Loc: ROM0) is **positioned behind** the 128 X 32 **Dot Matrix Display Board** *(Neither board contain Fuses.)*

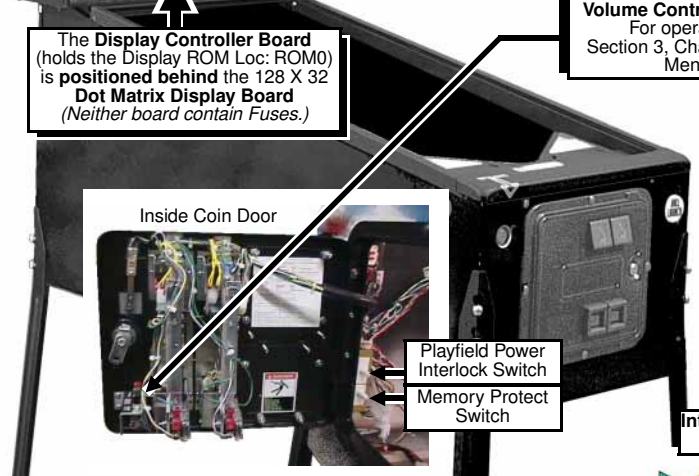

Volume Control & Service Switches
For operational usage, see Section 3, Chapter 1, Portals Service Menu Introduction

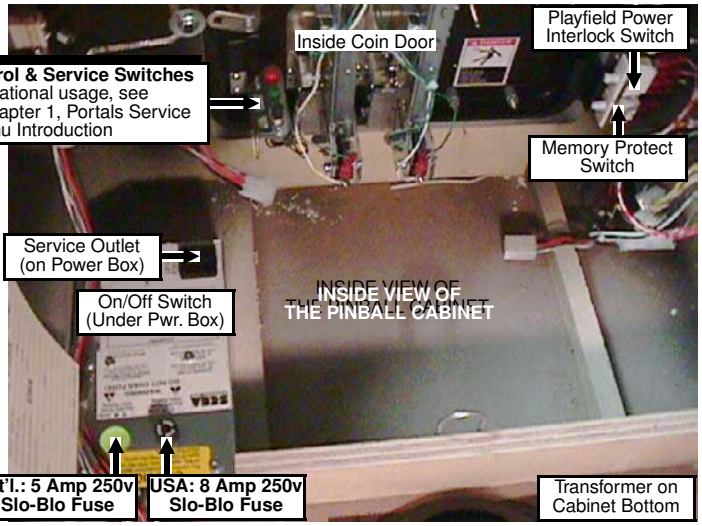

Find-It-In-Front: Dr. Pinball

FIND-IT-IN-FRONT: Dr. Pinball Section Explained

The key technical data from various parts of the manual were extracted and combined into the **"Find- It-In-Front: Dr. Pinball Section."** This section (pages **DR.** ❶ - ❿) will assist the technician in locating important technical information needed to troubleshoot the Pinball Machine. **Dr. Pinball** is also available in a Flow Chart Help Format in the Game Display. To access, enter the **Portals™ Service Menu**.

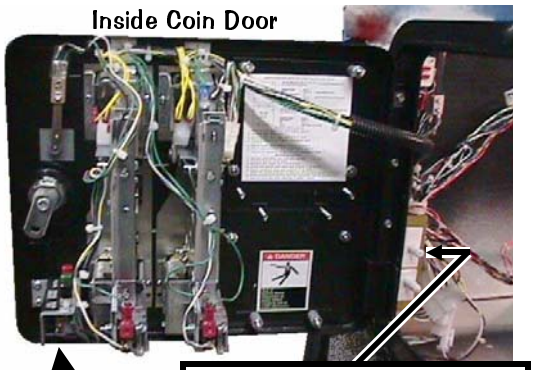

If Coil & Flashlamp Testing, the Playfield Power Interlock Switch must be pulled out.

How It Works

First, the operator / technician must enter the ***Service Menu Mode*** (for a complete description of the **Portals™ Service Menu** and **ICONS *Read!*** Section 3, Chapter 1). To get into the ***Service Menu Mode***, power-up the game (if not already) and open the **Coin Door**. On the **Coin Door** is the **Portals™ Service Switch Set** (**Red**, **Green** & **Black Buttons**).

Step 1: Push down the **Black "BEGIN TEST" Button**. Looking at the Video Display you will momentarily see the introductory screen followed by the **MAIN MENU**.

Step 2: Move through the Menus by pushing the **Red "LEFT"** or **Green "RIGHT" Buttons**.

Step 3: Select or activate the *Icons* by pushing the **Black "ENTER" Button**.

Portals™ Service Switch Set

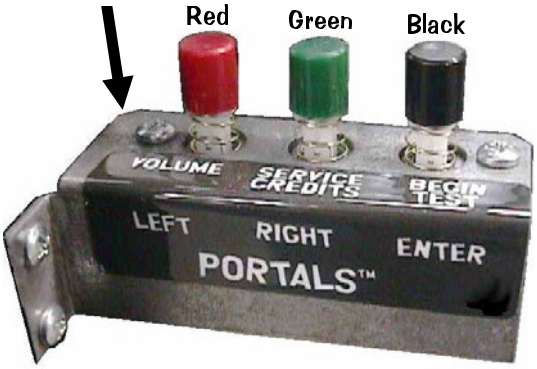

While in the **Portals™ Service Menu**, the **Start Button** can be used in lieu of the **Black Button**; the **Left** & **Right Flipper Buttons** can be used in lieu of the **Red** & **Green Buttons**. However, in *Switch* or *Active Switch Tests* ***only*** the **Red** & **Green Buttons** can be used.

In our **Portals™ Service Menu**, selecting the "DR." *Icon* will bring the operator/technician into Dr. Pinball (Flow Chart Menus), the "on-screen" diagnostic aide. This is a feature that will allow you to utilize the power of the micro-processor assisting in troubleshooting a problem with the machine in a Flow Chart format *(Just follow along & answer the questions.).*

While in the **MAIN MENU**, select the "DIAG" *Icon*, then select the Cross "DR." *Icon* (the last *Icon* before the "PREV" *Icon*). This will bring you (the operator / technician) into **DR. PINBALL** (Flow Chart Menus) which offers you a choice of three (3) Sub-Menus: Coil "DR.," Switch "DR." & Lamp "DR." *Icons*. Selecting a particular sub-menu will give you a choice of which specific Flipper, Coil, Switch or Lamp circuit needs to be diagnosed. The display will now ask a question or give a procedure to follow such as *"Does the lamp turn on?"* or *"Check bridge rectifier BR-20, if short replace."* When *Dr. Pinball* asks a question or requests a procedure, respond by selecting the appropriate *Mini-Icon*, and continue.

From the Main Menu in Portals™ GO TO DIAGNOSTICS MENU →

From the Diagnostics Menu GO TO DR. PINBALL →

From the Dr. Pinball Menu

GO TO COIL, SWITCH OR LAMP FLOW CHARTS

The following are the *Mini-Icons* with explanations for the **Dr. Pinball Sub-Menus**:

Select a Coil, Lamp, Switch or Flipper to diagnose with the "-" or "+" *Icon*; select the "RUN" *Icon* to activate the choice. The "PREV" *Icon* goes back to previous question. The "QUIT" *Icon* exits Portals completely.

Seen when a question is being asked on the Display. Select the "YES" *Icon* or "NO" *Icon* to answer the question given. The "END" *Icon* lets you select a new item to test.

Seen when diagnosis is given. Select any *Icon* for your next step. The "?" *Icon* gives Help.

In Coil Flow Chart Menu, select the "PULSE" *Icon* to pulse the coil selected.

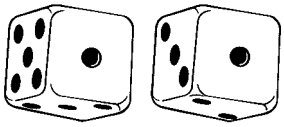

For proper operation of this High Roller Casino Pinball,

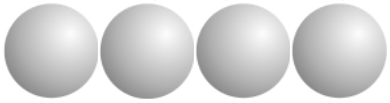

FOUR (4) PINBALLS MUST BE INSTALLED!

DIAGNOSTIC AIDS

The *display reads* "OPERATOR ALERT..."

— A message displayed during Game Mode or Power-Up to alert the operator of a problem.

OPERATOR ALERT works by monitoring any *switch activated coil* that has the potential to trap a ball when disabled (e.g. in the Auto Launch, Scoop, Eject, etc.). If this assembly has a closed switch indicating a ball is stuck or the switch is *stuck closed*, the **CPU/Sound Board** will activate the coil ten times. If the switch remains closed, the game will display a message indicating there is a problem (e.g. "**OPERATOR ALERT AUTO LAUNCH NOT WORKING**"). This not only warns the operator of a problem immediately, but indicates exactly where the operator should look to resolve it.

The *display flashes* "OPEN THE COIN DOOR"

— This indicates that CMOS RAM memory (CPU Loc. U212) has been corrupted.

This is caused by either failure in memory (e.g. batteries are dead or faulty **RAM**) or upon installation of updated version of code. Opening the Coin Door will initiate a Factory Restore, by opening the Memory Protect Switch. Check battery voltage at **VBATT Test Point** on the **CPU/Sound Board**.

CPU DIP SWITCH SETTINGS

Location of Dip Switch [SW300] is on the CPU/Sound Board (Right of CN6, Top Mid)

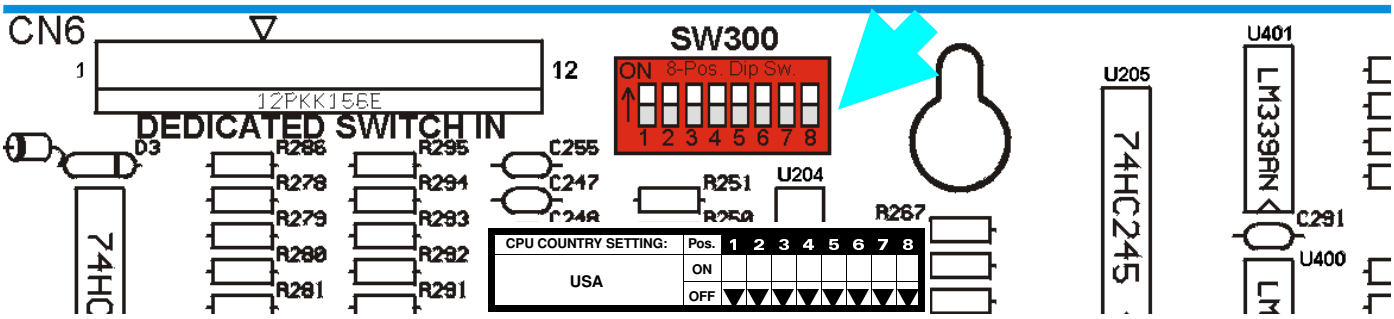

CPU COUNTRY SETTING:	Pos.	1	2	3	4	5	6	7	8
USA	ON								
	OFF	▼	▼	▼	▼	▼	▼	▼	▼

Custom Factory Adjustments By Country (All countries not noted use the "USA Setting")

CPU COUNTRY SETTING:	Pos.	1	2	3	4	5	6	7	8
EURO	ON	▲	▲	▲	▲				
	OFF					▼	▼	▼	▼

CPU COUNTRY SETTING:	Pos.	1	2	3	4	5	6	7	8
FRANCE	ON		▲	▲					
	OFF	▼			▼	▼	▼	▼	▼

CPU COUNTRY SETTING:	Pos.	1	2	3	4	5	6	7	8
NORWAY	ON		▲		▲				
	OFF	▼		▼		▼	▼	▼	▼

CPU COUNTRY SETTING:	Pos.	1	2	3	4	5	6	7	8
AUSTRIA	ON	▲							
	OFF		▼	▼	▼	▼	▼	▼	▼

CPU COUNTRY SETTING:	Pos.	1	2	3	4	5	6	7	8
GERMANY	ON	▲	▲	▲					
	OFF				▼	▼	▼	▼	▼

CPU COUNTRY SETTING:	Pos.	1	2	3	4	5	6	7	8
SWEDEN	ON	▲	▲		▲				
	OFF			▼		▼	▼	▼	▼

CPU COUNTRY SETTING:	Pos.	1	2	3	4	5	6	7	8
BELGIUM	ON		▲						
	OFF	▼		▼	▼	▼	▼	▼	▼

CPU COUNTRY SETTING:	Pos.	1	2	3	4	5	6	7	8
ITALY	ON				▲				
	OFF	▼	▼	▼		▼	▼	▼	▼

CPU COUNTRY SETTING:	Pos.	1	2	3	4	5	6	7	8
SWITZERLAND	ON			▲	▲				
	OFF	▼	▼			▼	▼	▼	▼

CPU COUNTRY SETTING:	Pos.	1	2	3	4	5	6	7	8
BRAZIL	ON	▲		▲	▲				
	OFF		▼			▼	▼	▼	▼

CPU COUNTRY SETTING:	Pos.	1	2	3	4	5	6	7	8
JAPAN	ON	▲			▲				
	OFF		▼	▼		▼	▼	▼	▼

CPU COUNTRY SETTING:	Pos.	1	2	3	4	5	6	7	8
UK	ON	▲		▲					
	OFF		▼		▼	▼	▼	▼	▼

CPU COUNTRY SETTING:	Pos.	1	2	3	4	5	6	7	8
CANADA	ON	▲	▲						
	OFF			▼	▼	▼	▼	▼	▼

CPU COUNTRY SETTING:	Pos.	1	2	3	4	5	6	7	8
NETHERLANDS (HOLLAND / DUTCH)	ON			▲					
	OFF	▼	▼		▼	▼	▼	▼	▼

CPU COUNTRY SETTING:	Pos.	1	2	3	4	5	6	7	8
UK FOR NEW 50p, 2£ COIN MECH	ON		▲	▲	▲				
	OFF	▼				▼	▼	▼	▼

ROM SUMMARY TABLE

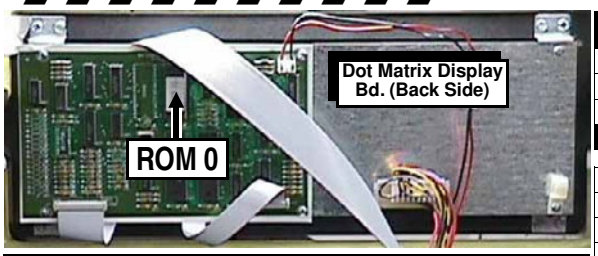

The **Display Controller Board** (holds the Display ROM Loc: ROM0) is **positioned behind** the 128 X 32 **Dot Matrix Display Board.**

I.C. NAME	TYPE	BD. NAME	LOC.	PART №
Game ROM	1MB	CPU / Sound Bd.	U210	965-0346-65
Sound EPROM	512K	CPU / Sound Bd.	U7	965-0347-65
Display EPROM	4MB	Display Cntlr. Bd.	ROM 0	965-0348-65
Display EPROM	N/C	Display Cntlr. Bd.	ROM 1	N/A
Voice ROM 1	8MB	CPU / Sound Bd.	U17	965-0349-65
Voice ROM 2	8MB	CPU / Sound Bd.	U21	965-0350-65
Voice ROM 3	8MB	CPU / Sound Bd.	U36	965-0351-65
Voice ROM 4	8MB	CPU / Sound Bd.	U37	965-0352-65

For Game, Sound & Voice ROM Locations see DR. ❶.

From the Main Menu in Portals™ GO TO DIAGNOSTICS MENU →

From the Diagnostics Menu GO TO SWITCH MENU →

From the Switch Menu GO TO SWITCH OR ACTIVE SWITCH TEST →

From the Switch Menu GO TO DEDICATED SWITCH TEST

SWITCH MATRIX GRID & DEDICATED SWITCHES

D iode O n T erminal S trip :

Row (Return) \ Column (Drive)	1: Q1 GRN-BRN CN5-P1	2: Q2 GRN-RED CN5-P3	3: Q3 GRN-ORG CN5-P4	4: Q4 GRN-YEL CN5-P5	5: Q5 GRN-BLK CN5-P6	6: Q6 GRN-BLU CN5-P7	7: Q7 GRN-VIO CN5-P8	8: Q8 GRN-GRY CN5-P9
1: U400 WHT-BRN CN7-P9	LEFT BUTTON (UK ONLY) on Cabinet side 1	LEFT CHIP [S.U. TRGT] Under Playfield 9	2 / HEARTS DROP [TARGET] On Assembly DOTS 17	3-BALL LOCK LOW [WIRE RAMP] On Assembly 25	TOP SLOT OPTO - TOP ENTRY On Assembly 33	ROULETTE WHEEL OPTO 1 On Assembly 41	LEFT BUMPER On Assembly 49	LEFT OUTLANE Under Playfield 57
2: U400 WHT-RED CN7-P8	4TH COIN SLOT On Coin Door 2	ROLL DICE (S.U. TRGT) Under Playfield 10	2/DIAMONDS DROP [TARGET] On Assembly DOTS 18	3-BALL LOCK MIDDLE [WIRE RAMP] On Assembly 26	MIDDLE SLOT OPTO - BASH On Assembly 34	ROULETTE WHEEL OPTO 2 On Assembly 42	RIGHT BUMPER On Assembly 50	LEFT RETURN LANE Under Playfield 58
3: U400 WHT-ORG CN7-P7	6TH COIN SLOT On Coin Door 3	4-BALL TROUGH #1 (LEFT) On Assembly 11	4/DIAMONDS DROP [TARGET] On Assembly DOTS 19	3-BALL LOCK HIGH [WIRE RAMP] On Assembly 27	BOT. SLOT OPTO - R. ENTRY On Assembly 35	ROULETTE WHEEL OPTO 3 On Assembly 43	BOTTOM BUMPER On Assembly 51	LEFT SLINGSHOT [BOTTOM] On Assembly 59
4: U400 WHT-YEL CN7-P6	RIGHT COIN SLOT On Coin Door 4	4-BALL TROUGH #2 On Assembly 12	A / SPADES DROP [TARGET] Under Playfield DOTS 20	LEFT 21 HIT STANDUP [TARGET] Under Playfield 28	MIDDLE RAMP LEFT ENTRY On Ramp Assy. 36	ROULETTE WHEEL OPTO 4 On Assembly 44	2ND UP / DOWN RAMP [SLOT MACH.] On Assembly 52	RIGHT OUTLANE Under Playfield 60
5: U401 WHT-GRN CN7-P5	CENTER COIN SLOT / DBA On Coin Door 5	4-BALL TROUGH #3 On Assembly 13	A / DIAMONDS STANDUP [TARGET] On Assembly 21	RIGHT 21 HIT STANDUP [TARGET] Under Playfield 29	MIDDLE RAMP RIGHT ENTRY On Ramp Assy. 37	LEFT ORBIT Under Playfield 45	ROULETTE SPIN Cabinet Front 53	RIGHT RETURN LANE Under Playfield 61
6: U401 WHT-BLU CN7-P3	LEFT COIN SLOT On Coin Door 6	4-BALL TROUGH VUK OPTO On Assembly 14	JOKER STANDUP [TARGET] Under Playfield 22	UPPER RIGHT STANDUP [TARGET] Under Playfield 30	1ST UP / DOWN RAMP [SLOT MACH.] On Assembly 38	RIGHT ORBIT Under Playfield 46	START BUTTON Cabinet Front 54	RIGHT SLINGSHOT [BOTTOM] On Assembly 62
7: U401 WHT-VIO CN7-P2	5TH COIN SLOT On Coin Door 7	4-BALL STACKING OPTO On Assembly 15	3 / DIAMONDS STANDUP [TARGET] On Assembly 23	RIGHT CHIP [TARGET] Under Playfield 31	LEFT ORBIT GATE Above Playfield 39	TOP LEFT SLINGSHOT On Assembly 47	SLAM TILT On Coin Door 55	NOT USED 63
8: U401 WHT-GRY CN7-P1	RIGHT BUTTON (UK ONLY) on Cabinet side 8	SHOOTER LANE Under Playfield 16	SPINNER On Assembly 24	POP ENTRY OPTO [BALL LOCK] Under Playfield 32	LEFT RAMP EXIT On Ramp Assy. 40	TOP RIGHT SLINGSHOT On Assembly 48	PLUMB BOB TILT Inside Cabinet 56	NOT USED 64

GND \ IC U206 INPUTS	Ground BLK CN6-P1, -P11
1: U206 GRY-BRN CN6-P2	#1 LEFT FLIPPER BUTTON in Cabinet side DS-1
2: U206 GRY-RED CN6-P3	#2 LEFT FLIPPER E.O.S (End-of-Stroke) in Cabinet side DS-2
3: U206 GRY-ORG CN6-P4	#3 RIGHT FLIPPER BUTTON in Cabinet side DS-3
4: U206 GRY-YEL CN6-P6	#4 RIGHT FLIPPER E.O.S. (End-of-Stroke) in Cabinet side DS-4
5: U206 NOT USED GRY-GRN CN6-P7	#5 NOT USED DS-5
6: U206 GRY-BLU CN6-P8	#6 VOLUME (RED BUTTON) (In Test: LEFT) on Coin Door DS-6
7: U206 GRY-VIO CN6-P9	#7 SERV. CRED. (GREEN BUTTON) (In Test: RIGHT) on Coin Door DS-7
8: U206 GRY-BLK CN6-P10	#8 BEGIN TEST (BLACK BUTTON) (In Test: ENTER) on Coin Door DS-8

From the Diagnostics Menu GO TO LAMP MENU →

From the Lamp Menu GO TO SINGLE LAMP TEST →

From the Lamp Menu GO TO TEST ALL LAMPS →

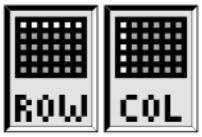

From the Lamp Menu GO TO ROW OR COLUMN TEST

LAMP MATRIX GRID

D iode O n T erminal S trip :

Row (GND) \ Column (18v)	1: U17 YEL-BRN J13-P9	2: U16 YEL-RED J13-P8	3: U15 YEL-ORG J13-P7	4: U14 YEL-BLK J13-P6	5: U13 YEL-GRN J13-P5	6: U12 YEL-BLU J13-P4	7: U11 YEL-VIO J13-P3	8: U10 YEL-GRY J13-P1
1: Q33 RED-BRN J12-P1	WON SLOT MACHINE #555 Bulb 1	WON POKER #555 Bulb 2	WON HI-LO #555 Bulb 3	WON ROULETTE #555 Bulb 4	WON CRAPS #555 Bulb 5	WON BLACKJACK 21 #555 Bulb 6	CASINO FRENZY #555 Bulb 7	CHEAT GAME #555 Bulb 8
2: Q34 RED-BLK J12-P2	(H) ILO [LT. OUTLANE] #555 Bulb 9	H (I) LO [LT. RETURN] #555 Bulb 10	HI (L) O [RT. RETURN] #555 Bulb 11	HIL (O) [RT. RETURN] #555 Bulb 12	LEFT BUMPER #555 Bulb DOTS 13	RIGHT BUMPER #555 Bulb DOTS 14	BOTTOM BUMPER #555 Bulb DOTS 15	BREAK THE BANK #555 Bulb 16
3: Q35 RED-ORG J12-P3	CHIP 1 #555 Bulb 17	CHIP 2 #555 Bulb 18	CHIP 3 #555 Bulb 19	CHIP 4 #555 Bulb 20	CHIP 5 #555 Bulb 21	CHIP 10 #555 Bulb 22	CHIP 25 #555 Bulb 23	CHIP 50 #555 Bulb 24
4: Q36 RED-YEL J12-P4	2 / HEARTS #555 Bulb 25	2 / DIAMONDS #555 Bulb 26	4 / DIAMONDS #555 Bulb 27	A / SPADES #555 Bulb 28	A / DIAMONDS #555 Bulb 29	JOKER #555 Bulb 30	3 / DIAMONDS #555 Bulb 31	ROLL AGAIN #555 Bulb 32
5: Q37 RED-GRN J12-P5	LEFT ORBIT ARROW #555 Bulb 33	PLAY 21 #555 Bulb 34	DOUBLE DOWN #555 Bulb 35	SLOT MACHINE ARROW #555 Bulb 36	SPIN SLOT #555 Bulb 37	LOCK BALL #555 Bulb 38	MULTIBALL #555 Bulb 39	SUPER JACKPOT #555 Bulb 40
6: Q38 RED-BLU J12-P6	RAMP ARROW #555 Bulb 41	PLAY ROULETTE #555 Bulb 42	PLAY ROLL-N-WIN #555 Bulb 43	RIGHT ORBIT ARROW #555 Bulb 44	PLAY HI-LO #555 Bulb 45	PLAY POKER #555 Bulb 46	BACK PANEL LEFT #1 #44 Bulb 47	BACK PANEL #2 #44 Bulb 48
7: Q39 RED-VIO J12-P8	LEFT CHIP #555 Bulb 49	ROLL DICE #555 Bulb 50	LEFT 21 HIT #555 Bulb 51	RIGHT 21 HIT #555 Bulb 52	LIGHT ROLL_N_WIN #555 Bulb 53	RIGHT CHIP #555 Bulb 54	BACK PANEL #3 #44 Bulb 55	BACK PANEL #4 #44 Bulb 56
8: Q40 RED-GRY J12-P9	SPECIAL #555 Bulb 57	EXTRA BALL #555 Bulb 58	BACK PANEL #5 #44 Bulb 59	BACK PANEL #6 #44 Bulb 60	BG SUPER POPS #555 Bulb 61	BG SUPER LOOPS #555 Bulb 62	BG SUPER SURPRISE #555 Bulb 63	BG SUPER SPINNER #555 Bulb 64
9: Q41 RED-WHT J12-P10	BG START (6:00) #555 Bulb 65	BG 3 SLOT SPINS (7:00) #555 Bulb 66	BG ? (8:00) #555 Bulb 67	BG 10 CHIPS (9:00) #555 Bulb 68	BG ROLL AGAIN (10:00) #555 Bulb 69	BG LITE EXTRA BALL (11:00) #555 Bulb 70	BG MULTIBALL (12:00) #555 Bulb 71	BG COLLECT BONUS (1:00) #555 Bulb 72
10: Q42 RED J12-P11	BG CASINO GAME (2:00) #555 Bulb 73	BG 25 MILLION (3:00) #555 Bulb 74	BG BONUS X (4:00) #555 Bulb 75	BG LIGHT SPECIAL (5:00) #555 Bulb 76	BACK PANEL #7 #44 Bulb 77	BACK PANEL LIGHT #8 #44 Bulb 78	BACK PANEL #9 #44 Bulb 79	BACK PANEL RIGHT #10 #44 Bulb 80

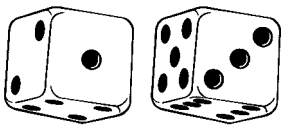

SWITCH MATRIX GRID LOCATIONS

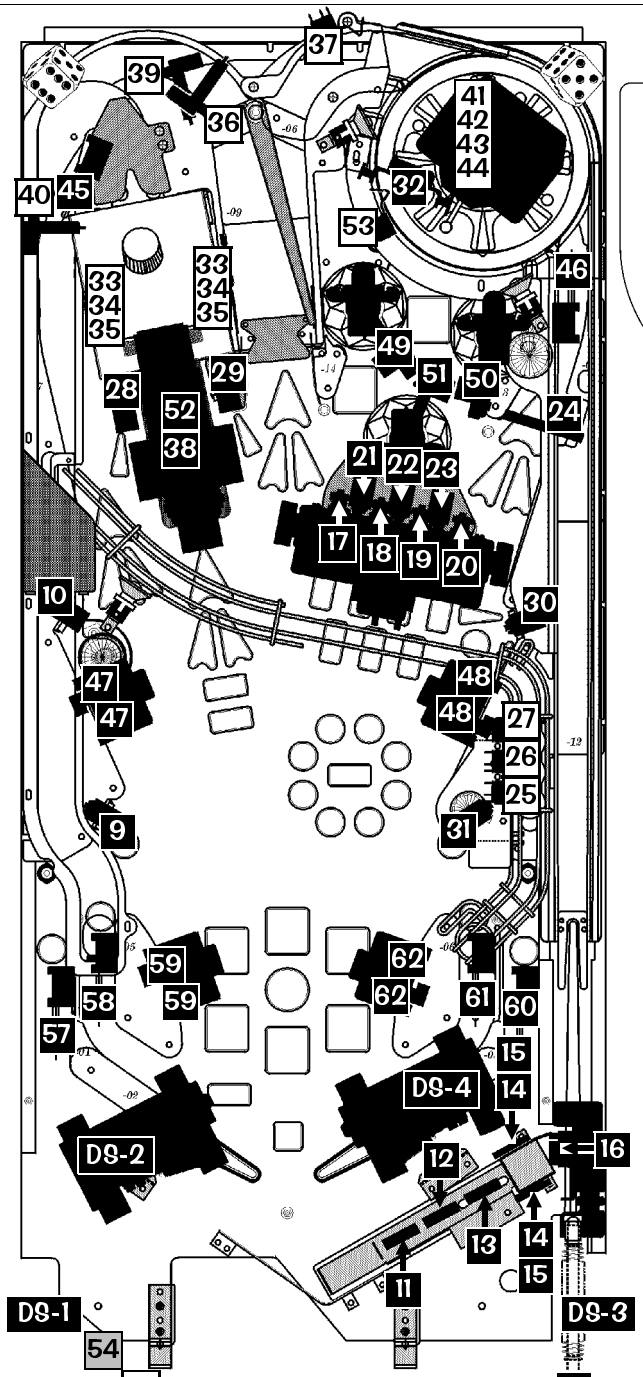

LAMP MATRIX GRID LOCATIONS

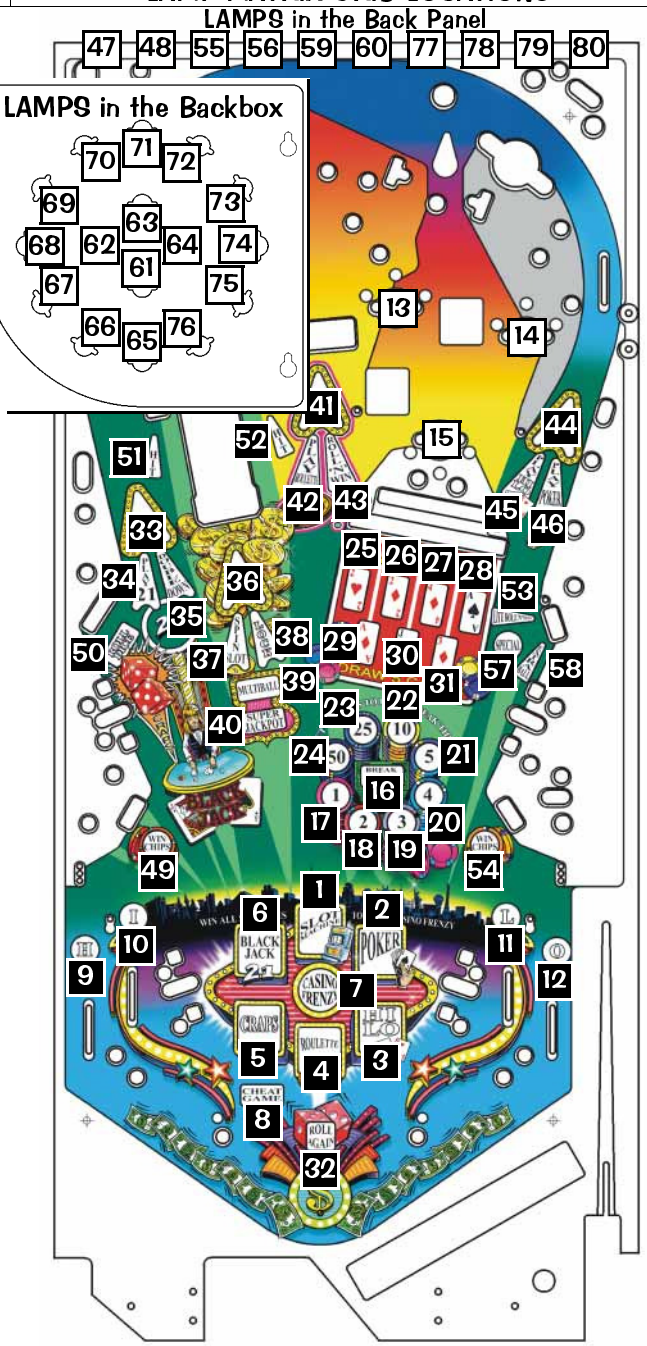

Legend Note: = Switches/Lamps mounted above P/F. = Switches/Lamps mounted below the P/F. = ...mounted on Cabinet.

TYPICAL SWITCH SCHEMATIC

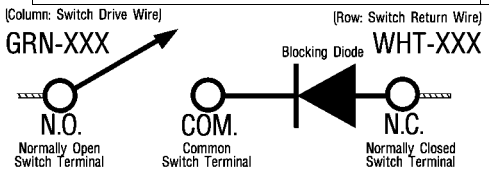

Note:
All Switches require diodes. Some diodes are located on Terminal Strips OR Diode Boards (under playfield) & not on the switch itself.

Diode
On
Terminal

Diode
On
Diode

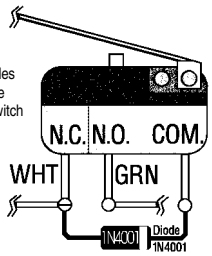

DEDICATED SWITCH SCHEMATIC

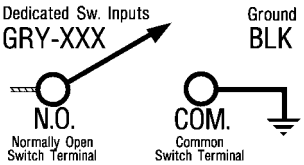

TYPICAL LAMP SCHEMATIC

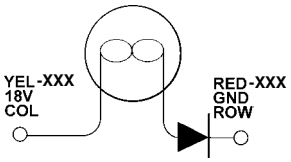

Note:
All Lamps require diodes.
Some diodes are located on Terminal Strips (under playfield) & not on the lamp itself.

Diode
On
Terminal

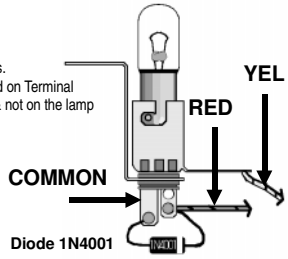

From the Main Menu in Portals™ GO TO DIAGNOSTICS MENU →

From the Diagnostics Menu GO TO COIL MENU →

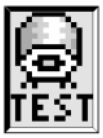

From the Coil Menu GO TO COIL TEST →

From the Coil Menu GO TO CYCLING COILS

COILS DETAILED CHART TABLE

High Current Coils Group 1		Drive Transistor (D.T.)	Driver Ouput Board	D.T. Control Line Color	D.T. Control Line Connect	Power Line Color	Power Line Connnection	Power Voltage	Coil GA-Turn or Bulb Type
#1	TROUGH UP-KICKER	Q1	I/O Pwr. Drvr.	BRN-BLK	J8-P1	YEL-VIO	J10-P4/5	50v DC	26-1200 090-5044-00T
#2	AUTO LAUNCH	Q2	I/O Pwr. Drvr.	BRN-RED	J8-P3	YEL-VIO	J10-P4/5	50v DC	22-600 090-5023-00B
#3	DROP TARGET RESET	Q3	I/O Pwr. Drvr.	BRN-ORG	J8-P4	YEL-VIO	J10-P4/5	50v DC	23-1100 090-5030-00T
#4	NOT USED	Q4	I/O Pwr. Drvr.	BRN-YEL	J8-P5				
#5	SLOT HANDLE	Q5	I/O Pwr. Drvr.	BRN-GRN	J8-P6	YEL-VIO	J10-P4/5	50v DC	32-1800 090-5031-00T
#6	NOT USED	Q6	I/O Pwr. Drvr.	BRN-BLU	J8-P7				
#7	ROULETTE WHEEL MOTOR	Q7	I/O Pwr. Drvr.	BRN-VIO	J8-P8	BRN	J7-P1	20v DC	Motor 041-5078-00
#8	FLASH: ROULETTE	Q8	I/O Pwr. Drvr.	BRN-GRY	J8-P9	YEL-VIO	J10-P4/5	50v DC	#906 Bulb 165-5004-00

High Current Coils Group 2		Drive Transistor (D.T.)	Driver Ouput Board	D.T. Control Line Color	D.T. Control Line Connect	Power Line Color	Power Line Connnection	Power Voltage	Coil GA-Turn
#9	LEFT BUMPER	Q9	I/O Pwr. Drvr.	BLU-BRN	J9-P1	YEL-VIO	J10-P4/5	50v DC	26-1200 090-5044-00T
#10	RIGHT BUMPER	Q10	I/O Pwr. Drvr.	BLU-RED	J9-P2	YEL-VIO	J10-P4/5	50v DC	26-1200 090-5044-00T
#11	BOTTOM BUMPER	Q11	I/O Pwr. Drvr.	BLU-ORG	J9-P4	YEL-VIO	J10-P4/5	50v DC	26-1200 090-5044-00T
#12	NOT USED	Q12	I/O Pwr. Drvr.	BLU-YEL	J9-P5				
#13	ORBIT MAGNET DOTS	Q13	I/O Pwr. Drvr.	BLU-GRN	J9-P6	VIO-YEL BLK	J10-P3	50v DC	24-780 090-5061-00
#14	CENTER RAMP DIVERTER	Q14	I/O Pwr. Drvr.	BLU-BLK	J9-P7	RED-YEL GRY-YEL	J10-P1/2	50v DC	23-1100 090-5030-00T
#15	LEFT FLIPPER (50v RED/YEL)	Q15	I/O Pwr. Drvr.	ORG-GRY	J9-P8	RED-YEL GRY-YEL	J10-P1/2	50v DC	22-900 090-5020-20T
#16	RIGHT FLIPPER (50v RED/YEL)	Q16	I/O Pwr. Drvr.	ORG-VIO	J9-P9	RED-YEL BLU-YEL	J10-P1/2	50v DC	22-1080 090-5032-00T

Low Current Coils Group 1		Drive Transistor (D.T.)	Driver Ouput Board	D.T. Control Line Color	D.T. Control Line Connect	Power Line Color	Power Line Connnection	Power Voltage	Coil GA-Turn or Meter #
#17	LEFT SLINGSHOT [BOTTOM]	Q17	I/O Pwr. Drvr.	VIO-BRN	J7-P2	BRN	J7-P1	20v DC	23-800 090-5001-00T
#18	RIGHT SLINGSHOT [BOTTOM]	Q18	I/O Pwr. Drvr.	VIO-RED	J7-P3	BRN	J7-P1	20v DC	23-800 090-5001-00T
#19	TOP LEFT SLINGSHOT	Q19	I/O Pwr. Drvr.	VIO-ORG	J7-P4	BRN	J7-P1	20v DC	23-800 090-5001-00T
#20	TOP RIGHT SLINGSHOT	Q20	I/O Pwr. Drvr.	VIO-YEL	J7-P6	BRN	J7-P1	20v DC	23-800 090-5001-00T
#21	FLASH: LOCK BALL	Q21	I/O Pwr. Drvr.	VIO-GRN	J7-P7	ORG	J6-P10	20v DC	#906 Bulb 165-5004-00
#22	POPS ENTRY POST	Q22	I/O Pwr. Drvr.	VIO-BLU	J7-P8	BRN	J7-P1	20v DC	27-1500 090-5004-00T
#23	BALL LOCK POST	Q23	I/O Pwr. Drvr.	VIO-BLK	J7-P9	BRN	J7-P1	20v DC	27-1500 090-5004-00T
#24	OPTIONAL COIN METER	Q24	I/O Pwr. Drvr.	VIO-GRY	J7-P10	RED	J16-P7	5v DC	Meter 5v 091-5000-00

Diode On Terminal Strip (if noted)

Low Current Coils Group 2		Drive Transistor (D.T.)	Driver Ouput Board	D.T. Control Line Color	D.T. Control Line Connect	Power Line Color	Power Line Connnection	Power Voltage	Bulb Type
#25	LEFT RAMP DIVERTER	Q25	I/O Pwr. Drvr.	BLK-BRN	J6-P1	BRN	J7-P1	20v DC	27-1500 090-5004-00T
#26	STEPPER MOTOR (RED) DOTS	Q26	I/O Pwr. Drvr.	BLK-RED to RED	J6-P2	GRY-RED WHT	J16-P3	20v DC	Step. Mtr. 041-5062-01
#27	STEPPER MOTOR (GREEN) DOTS	Q27	I/O Pwr. Drvr.	BLK-ORG to GRN	J6-P3	GRY-RED WHT	J16-P3	20v DC	Step. Mtr. 041-5062-01
#28	STEPPER MOTOR (BLACK) DOTS	Q28	I/O Pwr. Drvr.	BLK-YEL to BLK	J6-P4	GRY-RED WHT	J16-P3	20v DC	Step. Mtr. 041-5062-01
#29	STEPPER MOTOR (BLUE) DOTS	Q29	I/O Pwr. Drvr.	BLK-GRN to BLU	J6-P5	GRY-RED WHT	J16-P3	20v DC	Step. Mtr. 041-5062-01
#30	FLASH: DIVERTER	Q30	I/O Pwr. Drvr.	BLK-BLU	J6-P6	ORG	J6-P10	20v DC	#906 Bulb 165-5004-00
#31	FLASH: POPS*2	Q31	I/O Pwr. Drvr.	BLK-VIO	J6-P7	ORG	J6-P10	20v DC	#89 Bulb 165-5000-89
#32	FLASH: SLOT MACHINE	Q32	I/O Pwr. Drvr.	BLK-GRY	J6-P8	ORG	J6-P10	20v DC	#906 Bulb 165-5004-00

Note: In Test Flash Lamps Menu ("Flash" Icon), Flashers tested are all Flash Lamps located between Q1-Q32 (This Game: #8, #21 & #30-#32)

Auxilliary (UK ONLY)		Drive Transistor (D.T.)	Driver Ouput Board	D.T. Control Line Color	D.T. Control Line Connect	Power Line Color	Power Line Connnection	Power Voltage	Coil GA-Turn
AUX 1: LEFT UP/DOWN POST		Q1	Sol. Expander (Aux. Board)	WHT	J3-P11	BRN	J7-P1	20v DC	26-1200 090-5044-00T
AUX 2: CENTER UP/DOWN POST		Q2	Sol. Expander (Aux. Board)	RED	J3-P10	BRN	J7-P1	20v DC	23-1100 090-5030-00T
AUX 3: RIGHT UP/DOWN POST		Q3	Sol. Expander (Aux. Board)	ORG	J3-P9	BRN	J7-P1	20v DC	26-1200 090-5044-00T

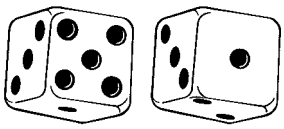

COIL LOCATIONS

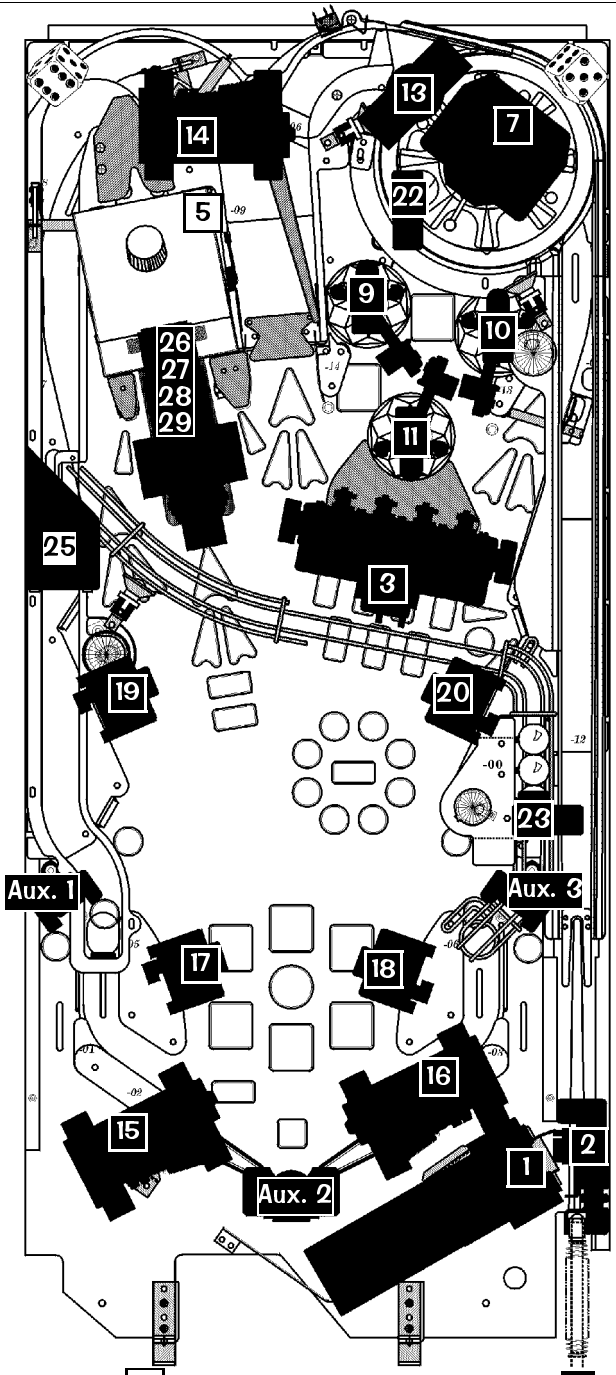

FLASH LAMP LOCATIONS

Legend Note: ☐ = Coils/Flashers mounted above P/F. ■ = Coils/Flashers mounted below the P/F. ▒ = ...mounted in/on Cabinet.

TYPICAL COIL WIRING

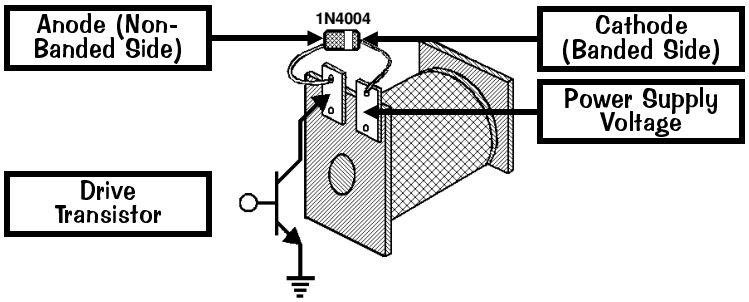

Note:
All Coils require diodes. Some diodes are located on Terminal Strips (under playfield) & not on the coil itself.
D iode
O n
T erminal
S trip

Domestic Pinball & Redemption Distributors Map

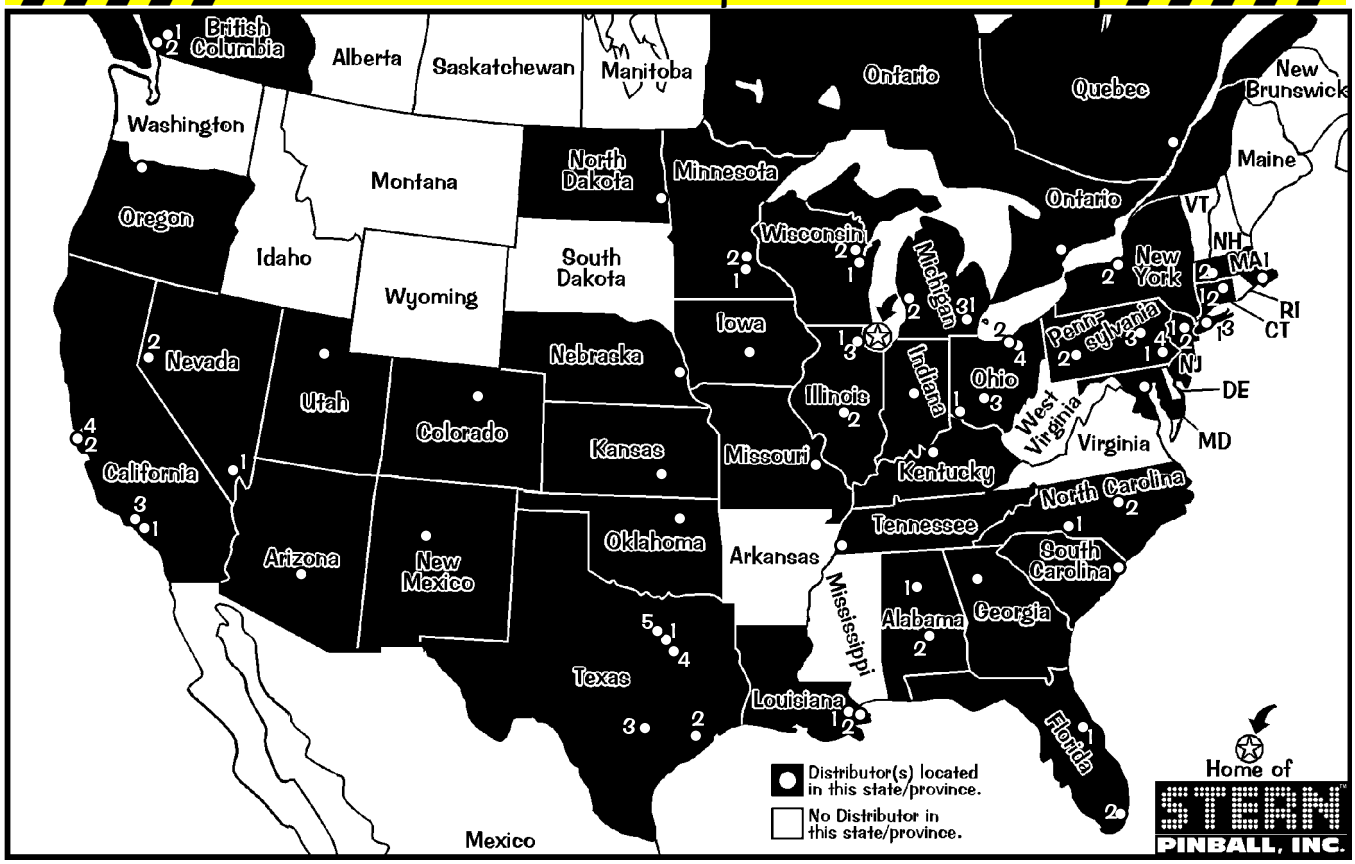

International Distributors Map

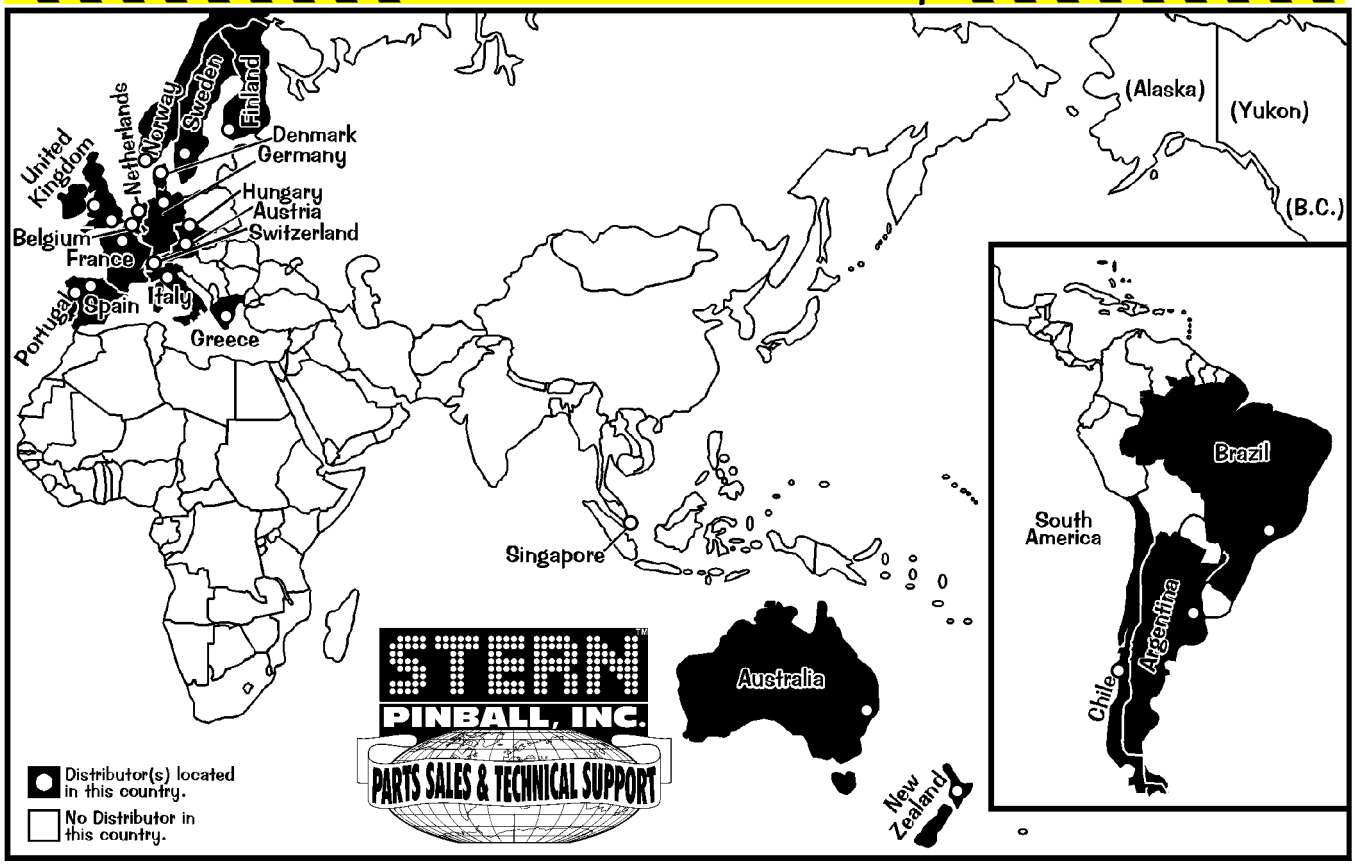

For *Parts & Service*, call your nearest Distributor. View the above maps & the directories on the next page to locate your closest Distributor in your state, province, or country. Distributors and phone numbers are subject to change. Call **Stern™ Pinball, Inc.** *(Parts Sales & Technical Support)* with any questions or if your Distributor cannot help you: **1-800-542-5377** (in **USA** or **Canada**) or **1-708-786-5466**. Visit us at www.SternPinball.com for current Distributor Information & other pinball needs.

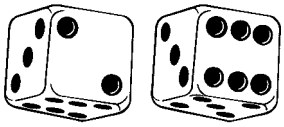

Domestic Pinball & Redemption Distributors Directory

ALABAMA
Birmingham Vending
Birmingham (1)
1-205-324-7526

Franco Distributing
Montgomery (2)
1-334-834-3455

ARIZONA
Betson West
Phoenix
1-602-233-0190

Mountain Coin
Phoenix
1-602-269-7596

BRITISH COLUMBIA
Can. Coin Machine
Burnaby (1)
1-604-420-4008

Pacific Vending
Vancouver (2)
1-604-324-2164

CALIFORNIA
Betson West
Buena Park (1)
1-714-228-7500
So. San Francisco (2)
1-650-952-4220

C.A. Robinson
Los Angeles (3)
1-323-735-3001
San Francisco (4)
1-650-871-4280

COLORADO
Mountain Coin
Denver
1-303-427-2133

CONNECTICUT
Betson Enterprises
Milford (1)
1-203-878-6966

TDM Distributing
Willimantic (2)
1-860-456-4231

FLORIDA
Birmingham Vending
Orlando (1)
1-407-425-1505

Brady Distributing
Miami (2)
1-305-621-1415
Orlando (1)
1-407-872-1666

GEORGIA
Greater Southern Dist.
Atlanta
1-404-352-3040

ILLINOIS
American Vending
Elk Grove Village (1)
1-847-439-9400
Springfield (2)
1-217-492-9400

Atlas Distributing
Elk Grove Village (3)
1-847-952-7500

IOWA
Greater America Dist.
Johnston
1-515-278-4455

Moss Distributing
Des Moines
1-515-266-6422

INDIANA
Atlas Distributing
Indianapolis
1-317-786-6892

Cleveland Coin
Indianapolis
1-317-895-4270

Shaffer Distributing
Indianapolis
1-317-899-2530

KANSAS
United Dist., Inc.
Wichita
1-316-263-6181

KENTUCKY
Atlas Distributing
Louisville
1-502-966-5266

LOUISIANA
AMA Distributors, Inc.
Metairie (1)
1-504-835-3232

New Orleans Novelty
New Orleans (2)
1-504-888-3500

MARYLAND
State Sales & Service
Baltimore
1-410-646-4100

Weiner Distributing
Baltimore
1-410-525-2600

MASSACHUSETTS
Betson Ent. (NECO)
Norwood (1)
1-781-769-9760

Gekay Sales
E. Longmeadow (2)
1-413-525-2700

MICHIGAN
Atlas Distributing
Redford (1)
1-313-794-4880
Wyoming (2)
1-616-241-1472

Cleveland Coin
Livonia (3)
1-734-432-1040

MINNESOTA
Hanson Distributing
Bloomington (1)
1-612-884-6604

Lieberman Music
Minneapolis (2)
1-612-887-5299

MISSOURI
Shaffer Distributing
St. Louis
1-314-645-3393

NEBRASKA
Central Dist.
Omaha
1-402-493-5600

Greater America Dist.
Omaha
1-402-553-2812

NEVADA
Mountain Coin
Las Vegas (1)
1-702-798-0900

Reno Game Sales
Reno (2)
1-775-829-2080

NEW JERSEY
Betson Enterprises
Carlstadt (1)
1-201-438-1300

State Sales & Service
Carteret (2)
1-732-750-2700

NEW MEXICO
Mountain Coin
Albuquerque
1-505-345-7706

NEW YORK
Betson Enterprises
New Hyde Park (1)
1-516-354-4647
Syracuse (2)
1-315-455-5400

Deith Distributing
Roslyn Heights (3)
1-516-621-1234

NORTH CAROLINA
Brady Distributing
Charlotte (1)
1-704-357-6284

Operators Distributing
Archdale (2)
1-336-884-5714

NORTH DAKOTA
M.H. Associates, Inc.
Fargo
1-701-282-7877

OHIO
Atlas Distributing
Cincinnati (1)
1-513-851-4100

Cleveland Coin
Cleveland (2)
1-216-692-0960

Shaffer Distributing
Columbus (3)
1-614-421-6800
Macedonia (4)
1-330-467-4850

OKLAHOMA
Galaxy Distributing
Tulsa
1-918-835-1166

ONTARIO
Starburst Coin Mach.
Toronto
1-416-251-2122

OREGON
Dunis Distributing
Portland
1-503-234-5491

PENNSYLVANIA
Betson Enterprises
King Of Prussia (1)
1-610-265-1155
Pittsburgh (2)
1-412-331-8703

Cleveland Coin
Pittsburgh (2)
1-412-323-8400

Green Coin
Pittsburgh (2)
1-412-881-8804

Roth Novelty (Superior)
Wilkes-Barre (3)
1-570-824-9994

State Sales & Service
Bensalem (4)
1-215-638-1122

QUEBEC
Laniel Automatic Mach.
Montreal
1-514-731-8571

SOUTH CAROLINA
Green Coin
Mrytle Beach
1-843-626-1900

TENNESSEE
Brady Distributing
Memphis
1-901-345-7811

Green G.A.M.E.S.
Memphis
1-901-353-1000

TEXAS
Commercial Music
Dallas (1)
1-214-741-6381

H.A. Franz, & Co.
Houston (2)
1-713-523-7366
San Antonio (3)
1-210-226-6322

Master Sales
Corsicana (4)
1-903-874-4740

Southgate Amusement
Houston (2)
1-713-691-7335
San Antonio (3)
1-210-225-3844

Southgate/Moss Dist.
Irving (5)
1-972-721-4600

UTAH
Mountain Coin
Salt Lake City
1-801-262-5494

Struve Distributing
Salt Lake City
1-801-328-1636

WISCONSIN
Pioneer Sales & Svc.
Green Bay (1)
1-920-336-5800
Menomonee Falls (2)
1-262-781-1420

Viking Vending
Menomonee Falls (2)
1-262-255-6580

Note: For states and Canadian Provinces which do not have Distributors, call the neighboring state or province with the city closest to you (indicated with a white dot). States or Provinces with more than 1 city containing a distributor are numbered. View the map on the previous page.

Note: *Distributors are subject to change. Visit us at* **www.SternPinball.com** *for current Distributor Information.*

International Distributors Directory

ARGENTINA
Universe Electronics
Buenos Aires
011-54-1-865-4730

Electroport (Florencia)
Mar Del Plata
011-54-223-495-5532

AUSTRALIA
Amusement Mach. Dist.
Matraville
011-61-29-316-6000

AUSTRIA
R. Rupp
Kaindorf
011-43-34-528-6105

Tab
Ansfelden
011-43-72-297-8040

Nova Games
(Hamburg, Germany)
011-49-4-053-8060

BELGIUM
Brabo
Antwerpen
011-32-3-237-2591

BRAZIL
DiverBras
São Paulo
011-55-11-6674-1000

CHILE
Cuinsa
Santiago
011-56-2-641-8520

DENMARK
Vendcomatic
(Oslo, Norway)
011-47-2-291-8383

FINLAND
Pelika Ray-Oy
Espoo
011-358-94-370-2925

FRANCE
Avranches Automatic
Ducey
011-33-23-389-6162

SFA
Paris
011-33-15-326-8080

GERMANY
Nova Games
Hamburg
011-49-4-053-8060

Parts & Service Only
Bally Wulff (Berlin)
011-49-3-062-0020
Bally Wulff (Hannover)
011-49-511-358-5368

GREECE
Elcoin
Nikea
011-30-1-492-9357

Greece Coin
Athens
011-30-1-577-7012

HUNGARY
Flipper Rex
Budapest
011-36-1-132-6512

ITALY (RSM)
Tecnoplay S.A.
San Marino
011-37-0-890-0361

NETHERLANDS
AWA
Amsterdam
011-31-2-069-4260

Errél Industries
Hertogenbosch
011-31-73-645-6111

NEW ZEALAND
Amco Machine Supplies
Auckland
011-64-9-846-7606

Coin Cascade
Christchurch
011-643-3381-411

NORWAY
Vendcomatic
Oslo
011-47-2-291-8383

PORTUGAL
Jacinto & Martins, Lda.
Amadora
011-35-121-496-3744

SINGAPORE
Valibel Technologies
Singapore
011-65-748-8404

SPAIN
AmuseTEC, S.L.
Barcelona
011-34-93-739-6827

Sente, S.A.
Madrid
011-34-91-541-7112

SWEDEN
Call for Information
or visit our website
www.SternPinball.com

SWITZERLAND
Novomat, A.G.
Harkingen
011-41-62-388-8961

UNITED KINGDOM
Electrocoin
London, England
011-44-208-965-2055

Electrocoin Aftersales
Cardiff, S. Wales
011-44-2-920-614-000

Note: Prefix of "011" is USA's Dialing Code. If dialing outside the USA, please replace with your country's Dialing Code.

POWER REQUIREMENTS

This game ***must be connected to a properly grounded outlet to reduce shock hazard*** & insure proper game operation. See Sec. 5, Schematics & Troubleshooting, Chp. 3, Cabinet Wiring (Transformer Power Wiring), for transformer connections required for **Normal**, **High**, and **Low Line** conditions.

Normal Line:	**110v AC - 125v AC @ 60Hz**	
Domestic uses an 8AMP 250v Slo-Blo Fuse.	**AVG OPERATION** CURRENT: **2.8AMP** WATTAGE: **329w**	**MAX OPERATION** CURRENT: **8AMP** WATTAGE: **940w**
High Line:	**218v AC - 240v AC @ 50Hz**	
Export uses 5AMP 250v Slo-Blo Fuses. (*England & Hong Kong use an 8AMP 250v S/B Fuse.)	**AVG OPERATION** CURRENT: **1.8AMP** WATTAGE: **412w**	**MAX OPERATION** CURRENT: **5AMP** | **8AMP*** England & Hong Kong use an 8A Fuse. WATTAGE: **1145w** | **1832w***
Low Line:	**95v AC - 108v AC @ 50Hz / 60Hz**	
Export Japan Only uses an 8AMP 250v Slo-Blo Fuse.	**AVG OPERATION** CURRENT: **2.6AMP** WATTAGE: **264w**	**MAX OPERATION** CURRENT: **8AMP** WATTAGE: **812w**

TRANSPORTATION

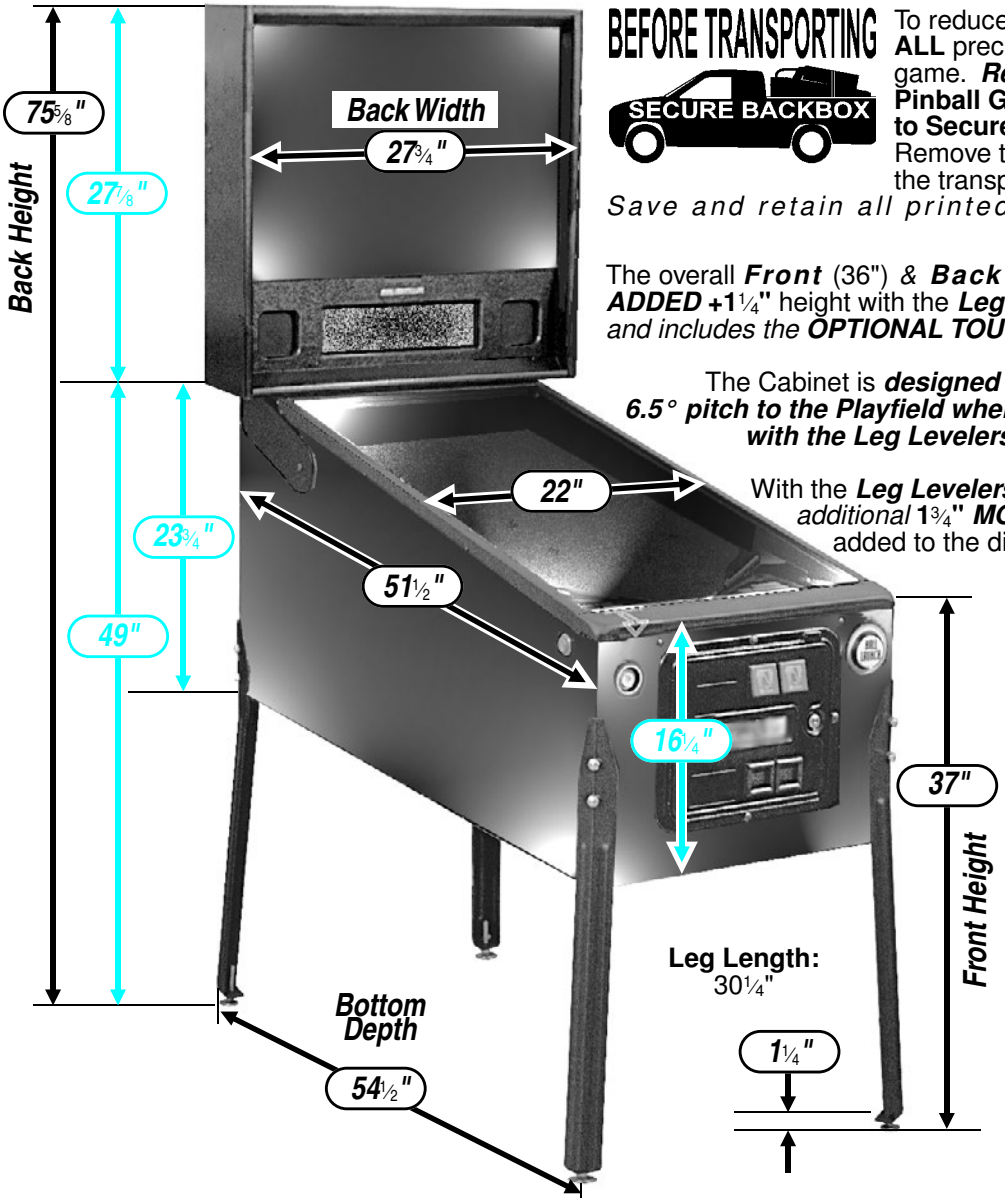

BEFORE TRANSPORTING

To reduce the possibility of damage, observe **ALL** precautions whenever transporting the game. ***Read & follow*** *Section 1, Chapter 1,* **Pinball Game Set-Up Procedures**, & **How to Secure the Backbox for Transporting**. Remove the legs & secure the game within the transporting vehicle.

Save and retain all printed information on the game.

The overall ***Front*** (36") & ***Back*** (85½") dimensions reflect the ***ADDED +1¼"*** height with the ***Leg Levelers*** *turned all the way* ***in*** *and includes the* ***OPTIONAL TOURNAMENT HEADER****;*

The Cabinet is ***designed*** *to give the recommended* ***6.5° pitch to the Playfield when all four (4) Legs are installed with the Leg Levelers*** *turned all the way* ***in****.*

With the ***Leg Levelers*** *turned all the way* ***out****, an additional* **1¾"** ***MORE*** to the overall height should be added to the dimensions.

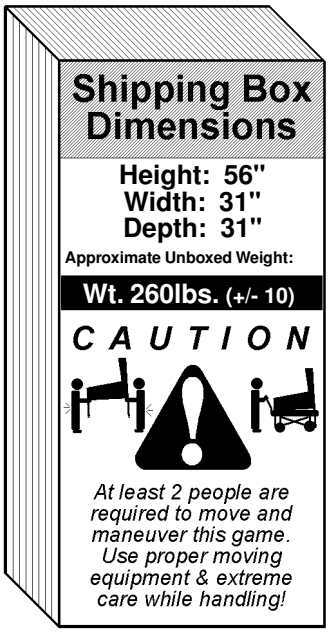

GAME DIMENSIONS

General Table of Contents

See Sections 3 & 5, Table Of Contents, for details of that Section and it's Chapters.

Drop Target Replacement Procedure.....Inside Front

- ▶ Backbox Layout Locations: Fuses, Bridges, Relays & ROMs ..... DR. ❶
- ▶ Find-It-In-Front: Dr. Pinball Section Explained..... DR. ❷
- ▶ Diagnostic Aids ↳ CPU DIP Switch Settings ↳ ROM Summary Table..... DR. ❸
- ▶ Switch Matrix Grid & Dedicated Switches ↳ Lamp Matrix Grid ..... DR. ❹
- ▶ Switch & Lamp Matrix Grid Locations ↳ Typical Switch, Dedicated Switch & Lamp Schematics ..... DR. ❺
- ▶ Coils Detailed Chart Table ..... DR. ❻
- ▶ Coil & Flash Lamp Locations ↳ Typical Coil Wiring ..... DR. ❼
- ▶ Domestic Pinball & Redemption and International Distributors Maps..... DR. ❽
- ▶ Domestic Pinball & Redemption and International Distributors Directories ..... DR. ❾
- ▶ Power Requirements ↳ Transportation ↳ Game Dimensions ..... DR. ❿

Game Manual General Table of Contents .....i-ii

SECTION 1 1-4

Chapter 1, After Set-Up..... 1

- ▷ Pinball Game Set-Up Procedures.....1
- ▷ Pinball Game Set-Up Future Reference.....2-3
- ▷ How to Secure the Backbox for Transporting ↳ Leg Leveler Adjustment ↳ Easy Access Service System - 3 Positions.....4

SECTION 2 5-6

Chapter 1, Game Operation & Features..... 5

- ▷ Start of Game Features ↳ During Game Features ↳ End of Game Features ↳ Auto Percentaging ↳ Instruction Card.....6

SECTION 3 7-48

Chapter 1, Portals™ Service Menu Introduction..... 7

- ▷ Portals™ Service Menu Table of Contents (View for an outline of this section) 7
- ▷ Portals™ Service Switch Set Access & Use ↳ How to Use This Section 8-9
- ▷ Portals™ Service Menu Icon Tree 10-11
- ▷ Portals™ Service Menu Example ↳ Exiting the Portals™ Service Menu 12-14

Chapter 2, Go To Diagnostics Menu 15-27
Chapter 3, Go To Audits Menu 28-33
Chapter 4, Go To Adjustments Menu..... 34-42
Chapter 5, Go To Reset Menu..... 43-44
Chapter 6, Go To Fuses List..... 45-46
Chapter 7, Go To Help Screen 47-48

SECTION 4 49-80

Chapter 1, Parts Identification & Location (The Pink Pages) 49

- Overview.....49
- Backbox (High Roller Casino) Assembly.....50
- Speaker Panel Assy. for the Backbox (H.R. Casino) & Associated Parts 51
- Cabinet - General Parts & Switches.....52-53
- Playfield - General Parts & Switches (Below) 54
- Playfield - General Parts & Switches (Above) 55

Section 4, Chapter 1, Parts Identification & Location (The Pink Pages) Continued on the Next Page

Playfield - Rubber Parts (Rings Actual Size) 56
Playfield - Plastics (Screened & Clear), Metal Covers, Mylar & Decals..... 57
Playfield - Rails, Wire Forms and Ball Guides 58
Playfield - Metal Posts (Screws) and Nuts (Actual Size) 59
Playfield - Metal Spacers (Actual Size) 60
Playfield - Plastic Posts and Spacers (Actual Size) 61
Playfield - Small Bayonet Type Bulbs and Sockets (Actual Size) 62
Playfield - Large Bayonet Type Bulb and Sockets (Actual Size) 63
Playfield - Wedge Base Bulbs and Sockets (Actual Size) 64
Chapter 2, Drawings for Major Assemblies & Ramps (The Blue Pages) 65
▷ Overview 65
Ball Shooter (Plunger) Assembly, 500-6146-00-04 (Items 1-8) ..... (Top) 66
Autoplunger Coil Assembly, 500-6092-04 (Items 1-6) with
Arm Weld Assembly, 500-6091-00 (Items 7-9) ..... (Bot) 66
4-Ball Trough Assembly, 500-6318-24 (Items 1-12B) and Associated Parts: 67
Flipper (Left) Assembly, 500-5944-11 (Items 1-12) and Associated Parts: 68
Flipper (Right) Assembly, 500-5944-02 (Items 1-12) and Associated Parts: 69
Slingshot (Lwr. & Upr. Lt./Rt.) Assemblies, 500-5849-00 (Qty. 4) (Items 1-10) 70
Turbo (Pop) Bumper Top Assy., 515-6459-01 (Qty. 3) (Items 1-7),
Turbo (Pop) Bumper Bottom Assy., 515-6459-04 (Qty. 3) (Items 8-15),
Turbo (Pop) Bumper Switch Assy., 515-6459-03 (Qty. 3) (Items 16-20)
and Associated Parts: 71
4-Bank Drop Target (No Trip Coils) Assembly, 500-6345-24-65 (Items 1-22) 72-73
Ball Lock (Short Plunger) Assembly, 500-5867-02-65 (Items 1-8) 74
Ball Lock (Long Plunger) Assembly, 500-5867-03-65 (Items 1-8) 75
Shooter Ramp Individual Parts Only (Items 1-11) 76-77
Roulette Wheel Individual Parts Only (Items 1-12) 78
Roulette Wheel Bottom (Motor) Individual Parts Only (Items 1-10) 79
Main Plastic Ramp Individual Parts Only (Items 1-29) 80-81
Diverter Assembly, 500-6441-04-65 (Items 1-9) 82
Wire Ramp Assembly Individual Parts Only (Items 1-9) 83
Slot Machine Unit Individual Parts Only (Items 1-21) 84-85
Up/Down Ramp Individual Parts Only (Items 1-4) ..... (Top) 86
Up/Down (Lift Ramp) Motor Bracket Individual Parts Only (Items 1-6) ..... (Bot) 86
Playfield Mini-Magnet (24-780) Individual Parts Only (Items 1-4) ..... (Top) 87
OPTO (Bracket & PEM) Individual Parts Only (Items 1-3) ..... (Bot) 87
▷ UK ONLY OPTIONAL: Ball Deflector (over Lt. & Rt. Outlanes) Assy., 500-5788-02 (Qty. 2) (Items 1-8) .. (Top) 88
▷ UK ONLY OPTIONAL: Up/Down Post Assembly, 500-6293-00 (Items 1-9) ..... (Bot) 88

SECTION 5 89-138
▷ Schematics & Troubleshooting Table of Contents (outline of this section) 89
Chapter 1, Backbox Wiring (The Yellow Pages) 91-92
Chapter 2, Playfield Wiring (The Yellow Pages) 93-96
Chapter 3, Cabinet Wiring (The Yellow Pages) 97-98
Chapter 4, Printed Circuit Boards (PCBs) (The Yellow Pages) 99-138

APPENDIXES A-I 139-154
▷ Appendixes A-I Table of Contents (outline of this section) 139
▷ Appendixes A-I 140-152
Plastic Part Color Chart ..... (Bottom) 151 + (Top) 152
Glossary of Terms & Parts Order Checklist Notes 153-154

Limited Warranty, Cautions, Warnings & Notices ..... Inside Back

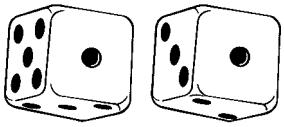

After Set-Up

Pinball Game Set-Up Procedures

...after reading the Pinball Game Set-Up Instruction Sheet (SPI Part Nº 755-5310-00) included with your New Pinball Game, continue with the below procedures:

With the Back Glass Removed:

1. Check all connectors in the Backbox for loose wire terminations. Reseat any loose wire by pushing in on the terminal. **Push on all** connectors plugged into the CPU/Sound Board, I/O Power Driver Board, and the Display Power Bd. to check that they are properly seated. Ensure Fluorescent Light Tube is seated correctly. Check that all fuses are seated properly. *Close and lock the Backbox and secure its' keys back inside the Coin Door.*

With the Playfield Glass Removed:

2. Make sure the proper amount of pinballs were installed *(Amount of balls are always specified on decal attached to the lock down assembly and top of Page **DR.** ❸ in the beginning of this manual).*

3. Remove all shipping tie downs, shipping blocks, packing foam, shipping instruction pages, etc. (if any) from the game. ***READ ALL PRINTED INFORMATION!*** Shipping instructions, labels and/or decals describe warnings, cautions, and/or important information specific to the game. **SAVE ALL PRINTED INFORMATION.**

4. Raise the playfield and support it, by lifting the **Prop Rod** *(located on the left, inside the cabinet).* The end of the Prop Rod should be placed into the hole under playfield. See the illustration **"Easy Access Service System"** *on Page 4.*

5. Visually inspect all cabinet cables and connector terminations; ensure no wires or cables are pinched and that cable harnesses are not pulled tight.

6. Lower the playfield and ensure game is **level side-to-side** by adjusting Leg Levelers, if required. See the illustration **"Leg Leveler Adjustment"** *on Page 4.* With the Leg Levelers turned all the way in (1.25" **from floor to bottom of leg)**, the **game pitch is 6.5°**; *depending on the condition of the floor, adjust the Leg Levelers as required.*

The playfield incline affects difficulty of play. Use the recommended incline; Game difficulty is best varied using game adjustments.

With the Coin Door Open:

7. If desired, perform any self tests at this time. See **Section 3**, **Chapter 1**, **Portals™ Service Menu Introduction**, and **Chapter 2**, **Go To Diagnostics Menu**, for instructions on how to *enter "Begin Play Test"* and *"Game Specific"* to test components on the game.

8. If desired, make **Game Pricing (Standard and/or Custom)** and **Add-A-Ball**, **Novelty**, or **X-Ball Play** adjustments at this time. See **Section 3**, **Chapter 4**, **Go To Adjustments Menu**, for instructions on how to enter adjustments. Follow instructions in the tables provided in the manual for suggestions of customizing.

➡Per CE "The appliance has to be placed in a horizontal position."
"This appliance is not to be cleaned by a Water Jet."

Pinball Game Set-Up Future Reference

CAUTION: At least 2 people are required to move and maneuver game.
Use proper moving equipment & extreme care while handling. Pinball game is 260lbs (+/- 10).
Refer to Game Manual for further Game Set-Up Procedures (Sec. 1, Chp. 1) and other important information!
TOOLS REQUIRED: 5/8" Socket Wrench & Utility Knife

1. Before opening box, lay the box flat on its side with **"TRUCK THIS SIDE ONLY"** facing the floor.

2. Slide game out using the **Black Nylon Strapping** as a handle.

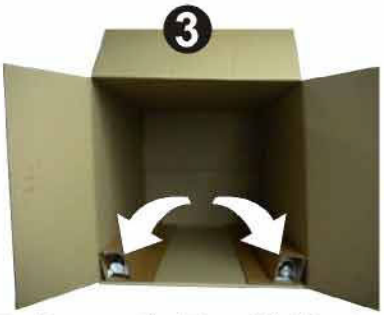

3. Remove the **Four (4) Identical Legs with Levelers** from the carton and set aside. (***SAVE!*** *all packing materials and information sheets related to this pinball until Set-Up is complete.)*

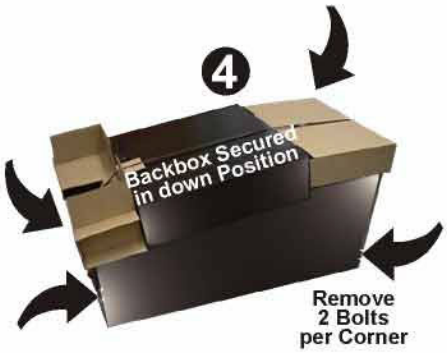

4. At this point **DO NOT CUT STRAPPING** *(You want to keep the Backbox secured in the down position)*. Loosen and remove the 8 Leg Bolts (use 5/8" Socket Wrench) and set aside.

5. Lift game into an **UPRIGHT POSITION** *(Coin Door Facing Up)*.

6. Install **FRONT LEGS** using the bolts removed from ***Step 4***. *Secure tightly.* ***Take care not to scratch the Black Finish on any of the Legs.***

7. Carefully set the game down on the **FRONT LEGS**. *Care should be taken...Game is heavy, two (2) people are recommended for this and the following step.*

8. Using supports or two (2) people, prop the rear of the cabinet up and install **REAR LEGS**. *Secure tightly.*

9. Cut **BLACK NYLON STRAPPING**. ***CAUTION:*** *Strapping will* ***SNAP, protect your eyes! Use extreme care*** *when using a utility knife or scissors.*

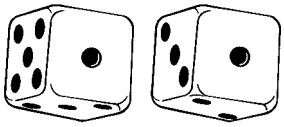

10. Lift the Backbox into the **UPRIGHT POSITION** *(Ensure the cables do not get pinched).*

11. After the **BACKBOX** is in the **UPRIGHT POSITION**, locate the **5/16" HEX KEY**. While inserted, rotate **KEY** with a **3/4** turn until latched & locked.

12. The next step you will remove the **PLAYFIELD GLASS** & **BACK GLASS** to access the inside of the cabinet & Backbox.

NOTE: KEYS are tied to the **Shooter Rod*** *(if equipped)* or taped to the **Playfield Glass** *(if equipped with Auto Plunger Button). Remove keys. One (1) set of keys opens the Coin Door, the other set is used to unlock the* ***Back Glass*** *to gain access to the White Star Board System.*

13. Open the Coin Door and pull the **YELLOW HANDLE** to the **LEFT** and at the same time pull up on the **FRONT TOP MOLDING** and remove. The **GLASS** can now be pulled out towards you and removed. ***TAKE CARE*** *while moving; set glass on a safe surface.*

14. Through the open **Coin Door**, remove the **RETAINING RING** at the rear of the **CASH BOX** and open. Remove the **PINBALLS** & the **PLUMB BOB** *from the* **SPARE PARTS BAG.**
(Save the other spare parts in cabinet).
Install the **PINBALLS** by placing them on the playfield so they can roll into the Outhole **Ball Trough**.

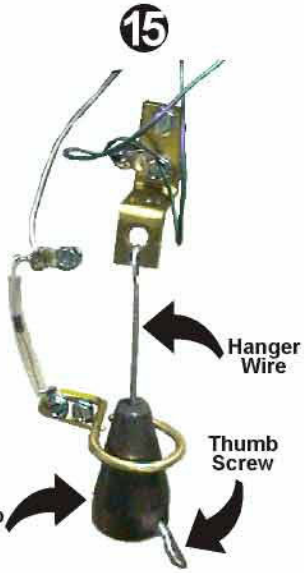

15. Install the **PLUMB BOB** on the **Hanger Wire** & tighten the **Thumb Screw**. Loosening the **Thumb Screw** & lowering or raising the **PLUMB BOB** makes the ***Games Tilt Function*** more or less sensitive.

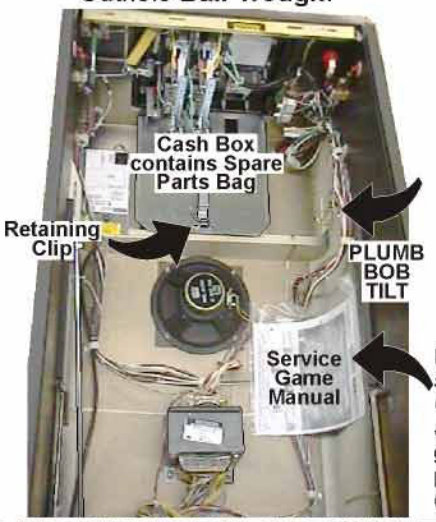

Remove the **PINBALL GAME MANUAL** *(stapled to side of the left wall of the cabinet). Review Section 1, Chapter 1, which describes how to lift the playfield to access the Plumb Bob Tilt Assembly.* The manual gives you all the important information you need to prepare for final set-up and other important information (such as Parts, Diagnostics, Schematics and more...).

STERN PINBALL, INC.

Stern™ Pinball, Inc. © 2000.

ALWAYS STORE THE MANUAL & INFORMATION SHEETS INSIDE THE CABINET WHEN NOT USING.

How to Secure the Backbox for Transporting

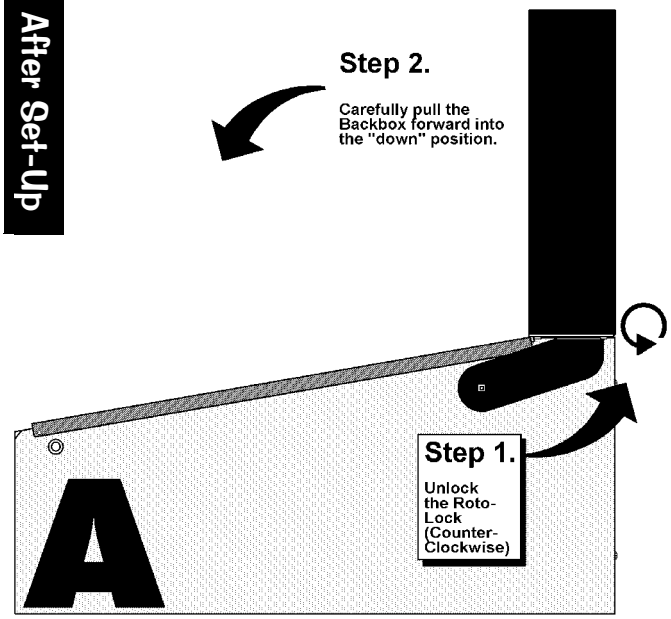

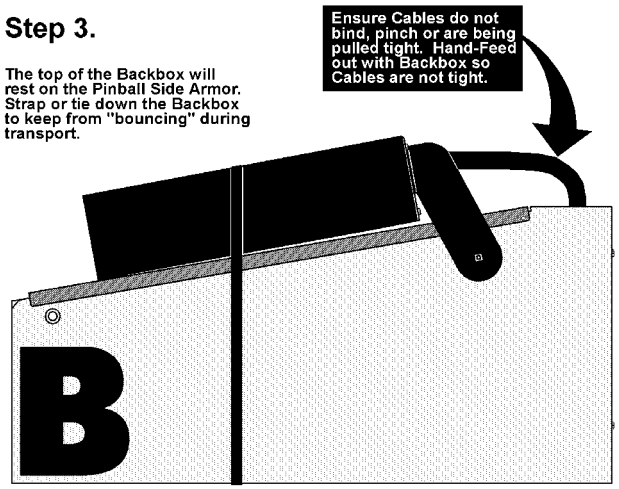

See Section 4, Chapter 1, Backbox Assembly for more details and part numbers.

Leg Leveler Adjustment

This cabinet is designed to automatically have a 6.5° pitch without any Leg Leveler adjustment!

Attach the four (4) Leg Assemblies to cabinet corners with the eight (8) leg bolts provided. See Section 4, Chapter 1, Cabinet - General Parts, for part numbers.

YOUR PLAYFIELD PITCH IS NOW AT 6.5° AS REQUIRED FOR PROPER GAME PLAY!

Verify 6.5° pitch. Minor adjustment(s) may be necessary depending on the location floor being level.

For custom adjustment greater than >6.5° can be acheived by turning out the rear leg leveler(s), however, it is not recommended.

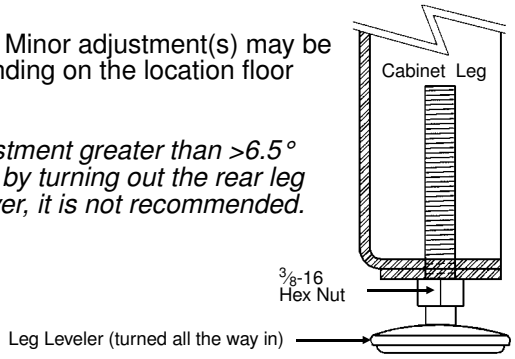

Easy Access Service System - 3 Positions

Carefully lift the playfield ***using the Left and Right Ball Guides*** upward.

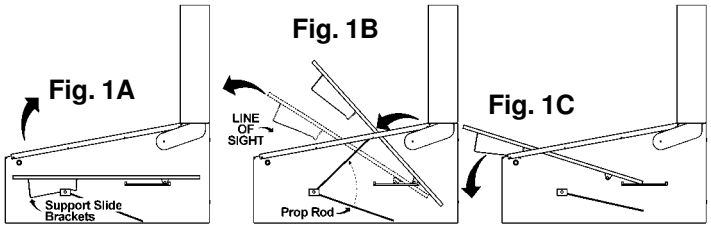

Positions 1 & 2
When lifted high enough, the ***Playfield Support Slide Brackets*** (Fig. 1A) can be seen & can clear the cabinet front. At this time, pull the playfield toward the front of the cabinet, checking that the mechanical components clear the cabinet front, then rest the playfield on the ***Playfield Support Slide Brackets*** at the front channel of cabinet (Fig. 1C); Or, the ***Prop Rod*** (located on the right inside of cabinet) can be used by positioning the ***Prop Rod*** end into the receiving playfield hole (Fig. 1B).

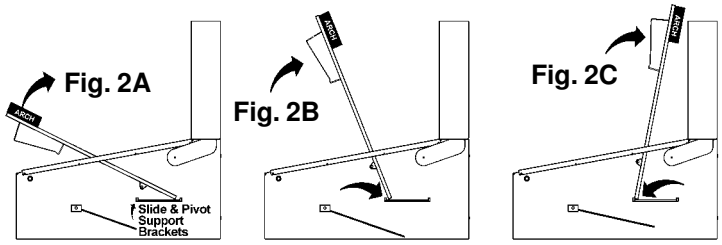

Position 3
With the playfield at rest, hold the sides & pull toward the front of the cabinet (approx. 6" to 8"), until resistance is felt from ***Edge Slide Brackets*** stopping against the ***Slide & Pivot Support Brackets*** located on either side of the cabinet (Fig. 2A). At this time, *swivel the playfield* toward the Backbox, then rest on the top edge (Fig. 2B & 2C).

Game Operation & Features

Start of Game Features

Starting a Normal Game

Insert coin(s). The game generates a sound for the first coin & for each subsequent coin with the display indicating the number of credits posted. Press the **Start Button** and a start-up sound is produced, and the posted credits are reduced by one. Subsequent players can be added (**up to 4 can play!**) by pressing the **Start Button** before the end of ball 1 (with sufficient credit in the game).

The display now indicates the player or # of players selected from the total depressions of the **Start Button**. The display indicates the ball in play, and a ball is served to the *Shooter Lane*. An introduction is shown followed by Skill Shot Graphics and/or instructions. Pressing the **Start Button** after ball 1 of any player will start a new game (if credits are available), ***but only*** if the **Start Button** is depressed for 2-3 seconds. This delay is to avoid accidental "re-starts" of a game. *(Note: Any partial credit remaining during game play after the end of ball 1, or power down, will be eliminated.)*

Starting Team Play (Doubles!)

Team Play is a four player game. The totals for players 1 & 3 (Team 1) and players 2 & 4 (Team 2) are displayed individually as well as the combined score for both teams. Team Play only works in a 4-Player game. In all other cases, the individual scores are shown.

Starting League Play

After credit is posted, while holding in the **Left Flipper Button**, press the **Start Button**. League Play has now begun. The differences between Normal Game Play and League/Tournament Play are: There is no "auto-percentaging" (awarding extra balls, specials, etc. to players with very low scores on the second or third ball). Mystery Features are awarded in a set order rather than random in Normal Game Play. Percentage Game Features are not automatically advanced as they are for the Regular Play Features.

During Game Features

Feature Mode & Combination Shots

Features are lit on the playfield and started by completing *certain shots* (e.g. completion of Target Banks, Orbit(s), Ramp(s) and/or any combination of the shots).

Multiball

Multiball is started after completion of certain features. Multiball may vary with the amount of balls used depending on game style.

Replay Feature

Replay awards are given as the player exceeds a High Score Level during game play. This can be adjusted with Adjustment 3, Replay Awards (Default=**CREDIT**, adjustable). Players exceeding the High Score Levels can receive: **CREDIT**, **EXTRA BALL**, or **SPECIAL**. Adjust to **NONE** if a replay award is not desired.

End of Game Features

Game Endings

When all player(s) have played all balls (including any Extra Balls), the game ends. If power is interrupted during the course of a game, it will end that game (***see Starting a Normal Game***). Closure of the Plumb Bob Tilt Switch according to the number of tilts set (Default = 2, adjustable) or its prolonged closure will end the current Ball-In-Play. Closure of the Slam Tilt Switch on the coin door ends the current game(s).

Match Feature

At the end of each ball, earned bonuses are collected. At the end of the last ball of a game (including any extra balls, if applicable), earned bonuses are collected, then the system produces a random 2-digit number (a multiple of 10; 00 to 90). Matching the last 2 digits of the player's score with this number awards a credit. In Adj. 11, Match Percentage (Default=**9%**, adjustable) can be changed from 0-10%. Changing the percentage to **0%** displays the "Match Animation" at the end of the game, however, will never match (to award a credit). Changing this adjustment to **OFF** will not display the "Match Animation" nor award a credit.

Entering Initials/Name (Adjustable, see Sec. 3, Chp. 4, Adj. 27, High Score Initials)

If player achieved a new high score in any of the 3 categories (Regular, Wizard or Special Game Feature), the player may enter their 3 initials or 10-Letter Name. Use the **Left** & **Right Flipper Buttons** to choose letter or character as seen on the Dot Display. Hitting the Start Button locks in the letter or character and proceeds to the next letter. The game then proceeds into the *Game-Over Mode* and then to the *Attract Mode*.

*Note: A **Custom Message** (Adjustable, see Sec. 3, Chp. 4, Adj. 29) can be displayed during the Attract Mode; enter letters in the same fashion.*

Continued Next Page.

Auto Percentaging

This game is equipped with an Auto Percentaging Adjustment. The replay percent is automatically adjusted or you can set a fixed replay score. The factory default percentage is **10%**. Four levels may be selected. Adjust- ments allow awarding of a "credit" or an "extra ball" as each level is exceeded. With the ***Autopercentage Feature***, if the actual replay percentage is higher or lower than that desired, the game will automatically adjust for the new recommended percentage score(s). See Section 3, Chapter 4, Go To Adjustments Menu, Adj. 1 & Adj. 2. You may choose to make a different "score-to-beat" adjustment; this is done by utilizing Adj. 2, Replay Levels.

Instruction Card

Below is a **COPY** of the Game Instruction Card (SPI Nº: 755-5165-00 USA) which is included with every game. If your card is lost or damaged, simply **COPY** this page and *cut out* the Instruction Card as a *temporary replacement* until a *new card is ordered.*

(***Hint:*** **COPY & CUT** along the dotted line and fold in the center to keep the "COPY" sturdy.)

COPY & CUT

For more detailed game rules, visit our website @ www.SternPinball.com and click on the "High Roller Casino" or "Game Archive" Pop Bumper Link.

FOLD HERE

SKILL SHOT Time your plunge into the Roulette Wheel's desired color (look at Display for award).

CASINO GAMES Win all 6 games at least once to light Casino Frenzy.

- **SLOT MACHINE** Hit the *Slot Machine* to raise **Mini-Ramp**, then shoot into the *Slot Machine* to spin it.
- **POKER** Make your hand from the ***Poker Targets***, then shoot *Right Orbit* to play. Beat dealer's hand to win.
- **HI-LO** Complete *Bottom Lanes* to light ***HI-LO***, then shoot *Right Orbit* to play.
- **ROULETTE** *Pop bumper* hits light ***Roulette Wheel***. Get the ball into the ***Roulette Wheel*** and match the *Flashing Bumper* to win.
- **CRAPS** Shoot the *Craps Target* on the left to roll the dice.
- **BLACKJACK** Draw cards by hitting the ***21 Hit Targets***. Shoot *Left Orbit* to play.

CHIPS You will win or lose chips throughout the game. Collect 100 chips to light ***Break the Bank***.

ATM BONUS *Pop bumpers* increase ATM value. Lit *Orbit Shots* collect ***ATM Bonus***.

SPINNER Shoot the *Spinner* to advance the **Bonus X.**

ROLL'N'WIN Shoot the *Upper Right Target* to light ***Roll'N'Win***. Shoot the *Middle Ramp* to play. After the *dice roll,* select the number of spaces to move. Complete laps to collect **Super Awards**.

SLOT MACHINE MULTIBALL Spin the *Slot Machine* to **Light Lock**. Shoot open *Slot Machine* to **Lock Ball**. Lock the third ball in the *Slot Machine* to start **Multiball**. Every shot scores *Single-Double-Triple Jackpot.* Get the ***Slot Machine Triple Jackpot*** to light **Super Jackpot**. The more ***Triple Jackpots*** you make first, the larger the ***Super Jackpot***.

SLOT MACHINE PAYTABLE

REELS	CHIPS	POINTS	REELS	CHIPS	POINTS
S S S	25	Special	= = =	7	7,500,000
7 7 7	20	25,000,000	– – –	6	5,000,000
7 7 7	15	20,000,000	ANY –	3	2,500,000
ANY 7	10	15,000,000	ANY 1 S	--	1,000,000
= = =	8	10,000,000	CONSOLATION	--	100,000

S is WILD in any winning combination.

Manufactured by Stern™Pinball, Inc. © 2001 **High Roller Casino Pinball**

SPI Part Nº: 755-5165-00 USA

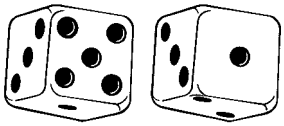

Portals™ Service Menu Introduction

Section 3
Table of Contents

Chapter 1, • INTRODUCTION 7
Service Switch Set (Red, Green & Black Buttons) Access & Use / How to Use This Section 8-9
Portals™ Service Menu Icon Tree 10-11
Portals™ Service Menu Example and Exiting the Portals™ Service Menu 12-14

Chapter 2, • GO TO DIAGNOSTICS MENU 15
•• Go To Switch Menu 16
••• Switch Test / Active Switch Test / Dedicated Switch Test 16
◈ Switch Matrix Grid & Dedicated Switches 16
◈ Switch Matrix Grid Descriptions with Part Numbers and Locations 17
•• Go To Coil Menu 18
••• Single Coil Test / Cycling Coil Test 18
◈ Coil & Flash Lamp Descriptions 18
◈ Coil & Flash Lamp Locations 19
◈ Coils Detailed Chart Table 20
◈ Backbox I/O Power Driver Board Detailed Wiring Diagram 21
•• Go To Lamp Menu 22
••• Single Lamp Test / Test All Lamps / Row & Column Lamp Tests 22
◈ Lamp Matrix Grid 22
◈ Lamp Matrix Grid Locations 23
•• Test Flash Lamps 24
•• Clear Ball Trough 24
•• Technician Alert 24
•• Service Phone # 24
•• Begin Play Test 24
•• Fire Knocker 24
•• Sound / Speaker Test 24
◈ Speaker Phase Testing 25
•• Begin Burn In 25
•• Dot Matrix Test & Dot Matrix Display Explained 25
•• Casino Specific (Slot Display, Roulette OPTO & Stepper Motor Tests) 26
•• Dr. Pinball (Flow Chart Menus: Coil, Switch & Lamp) 27

Chapter 3, • GO TO AUDITS MENU 29
◈ Game Audit Table 28
•• Earnings Audits (Audits 1-12) 29
•• S.P.I. Audits (Audits 13-55) 30-31
•• High Roller Casino Audits (Audits 56-203) 31-33
•• Go To Printer Menu 33
••• Quick Printout, Full Printout & Reset Printer 33

Chapter 4, • GO TO ADJUSTMENTS MENU 35
◈ Game Adjustment Table 34
•• S.P.I. Adjustments (Adjustments 1-42) 35-41
•• High Roller Casino Adjustments (Adjustments 43-67) 41
•• Custom Message (Direct Access to Adjustment 29) 42
•• Film Star Reset (Special Factory Reset Settings for the Home Environment) 42

Chapter 5, • GO TO RESET MENU 43
•• Reset Coin Audits / Reset Game Audits / Factory Reset 43
◈ Example 44

Chapter 6, • GO TO FUSES LIST 45
•• Go To Fuses List 45
◈ Example and Backbox Layout Locations: Fuses, Bridges, Relays & ROMs 45-46

Chapter 7, • GO TO HELP SCREEN 47
•• Go To Help Screens (Multi-Level) 47
◈ Problem / Solution Table 48

Service Switch Set (Red, Green & Black Buttons) Access & Use

The ***Service Switch Set*** provides access for ***three (3) functions*** available for your use. They are **Volume Menu**, **Service Credits Menu** and **Portals™ Service Menu**. All are accessed separately depending on which colored button (**Red**, **Green** or **Black**) is ***pushed first***.

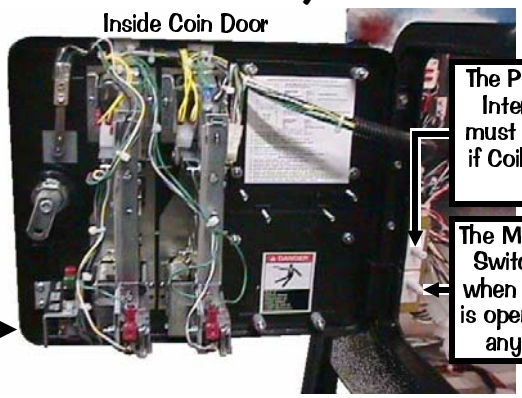

To access any of these ***three (3) functions*** you must first open the **Coin Door** (see pictorial above) with the Game in the ***Attract Mode*** *(not already in any Function or Menu stated below).*

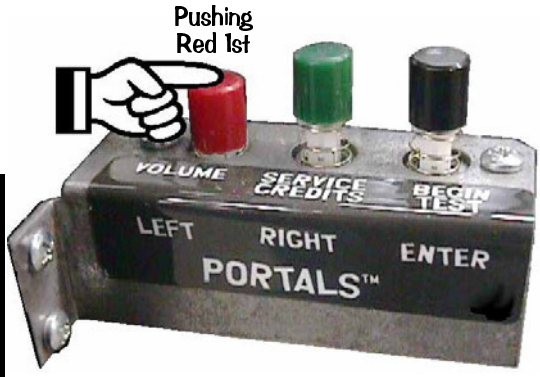

Function 1, Volume Menu

Pushing the ***Red Button*** first, enters the ***Volume Menu***. While in this Mode, to **DECREASE** the volume, hold down or depress the **Red "LEFT" Button** until desired the volume is achieved; to **INCREASE** the volume, hold down or depress the **Green "RIGHT" Button** until the desired volume is achieved.

Note: *Pushing the **Left** or **Right Flipper Buttons** operates the same as the **Red** or **Green Buttons** of the Service Switch Set, while in this Volume Mode.*

Set between **0** and **31**; **15** is the *Factory Default*. Once your adjustments are made, this menu will ***automatically exit*** a few seconds after the last button depression.

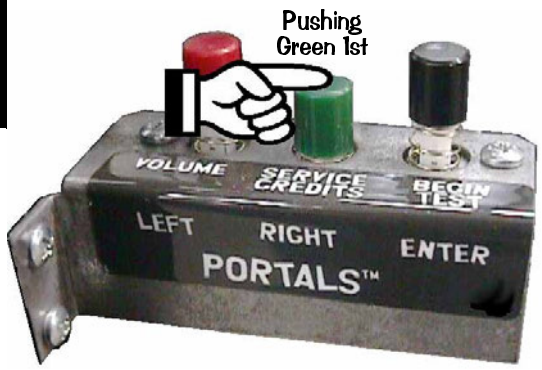

Function 2, Service Credits Menu

Pushing the ***Green Button*** first, adds ***Service Credits*** *(will not affect your audits as "paid" credits).* This is useful for the technician to test the game in regular play without affecting the game audits. Each depression adds **1 credit**; up to **50 credits** can be applied. **Adjustment 15**, **Credit Limit**, determines this *(the Factory Default is 30, however, it can be changed from 04-50; see Chapter 4 of this Section for details).* Once your credits are added, this menu will ***automatically exit*** a few seconds after the last button depression.

Note: *This function is disabled if **Adjustment 28**, **Free Play**, is set to **YES**. The Service Credits are limited to the Credit Limit in addition to any paid credits present in the game (e.g. If the Credit Limit is 30, and there are 8 paid credits present, only 22 Service Credits can be applied.).*

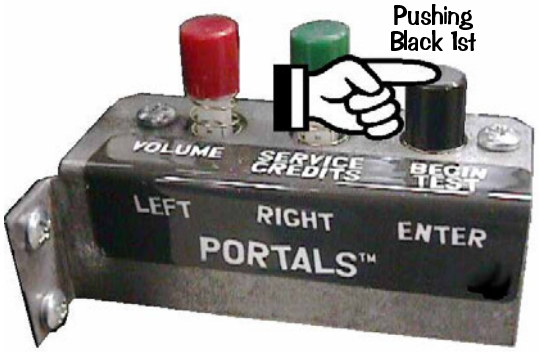

Function 3, Portals™ Service Menu

Pushing the ***Black Button*** first, enters the ***Portals™ Service Menu***. Once in, move through the menus and sub-menus by pushing down or depressing the **Red "LEFT"** or **Green "RIGHT" Buttons**.

Note: *Pushing the **Left** or **Right Flipper Buttons** operates the same as the **Red** or **Green Buttons** of the Service Switch Set, while in this Service Mode.*

Select or activate the *Icon* chosen *(the Icon will be "flashing")* by pushing down or depressing the **Black "ENTER" Button**.

Note: *Pushing the **Start Button** operates the same as the **Black Button** of the Service Switch Set, while in this Service Mode.*

Please read *the remainder of this Chapter for more information on the **Portals™ Service Menu**. The remaining six (6) Chapters of this Section explains all **Icons & Menus** in detail. **Read! Read! Read!***

Important: The ***Dual Switch Bracket*** holds the ***Playfield Power Interlock*** & ***Memory Protect Switches***. It is located just inside the Coin Door frame *(see pictorial of the **Coin Door** on the previous page)*. The Button Switch at the top is the ***Playfield Power Interlock Switch***. It must be pulled out for electro-mechanical device testing or diagnostic purposes (this is required). If this button is pushed in, the ***Playfield Power*** is diasabled while the **Coin Door** is **OPEN**. The Button Switch at the bottom is the ***Memory Protect Switch***. It is enabled while the **Coin Door** is **CLOSED**; *meaning any adjustment changes that are made **will not be written to memory***. If changing adjustments is required, ensure the **Coin Door** is **OPEN** to disable this switch, thus allowing for desired changes.

How to Use This Section

This section will cover all functions available in the **Portals™ Service Menu** in a *Step-By-Step* process. This section is divided into chapters which coincide with the **MAIN MENU**. The following pages in this chapter will instruct the operator on how to move through the menus. It's simple, easy and fun to use!

To get into the **Service Menu Mode** review **"Function 3, Portals™ Service Menu"** on the previous page. Push down the **Black "BEGIN TEST" Button** to begin. Looking at the Video Display you will momentarily see the introductory screen "**Service Menu**" with a *satellite flying from right to left pulling a banner* "**Portals©TM**" followed by the **MAIN MENU**:

Use the **Red "LEFT" & Green "RIGHT" Buttons** (or **Left** & **Right Flipper Buttons**) to move the selected ***Icon*** left or right, and the **Black "ENTER" Button** (or **Start Button**) to activate the selected ***Icon***. The use of the Service Switch Set (**Red**, **Green**, & **Black Buttons**) *is required* in **Switch Test** or **Active Switch Test**, as the **Start & Flipper Buttons** are a part of this test.

The **MAIN MENU** now appears with the "DIAG" *Icon* (**DIAGNOSTICS MENU**) flashing:

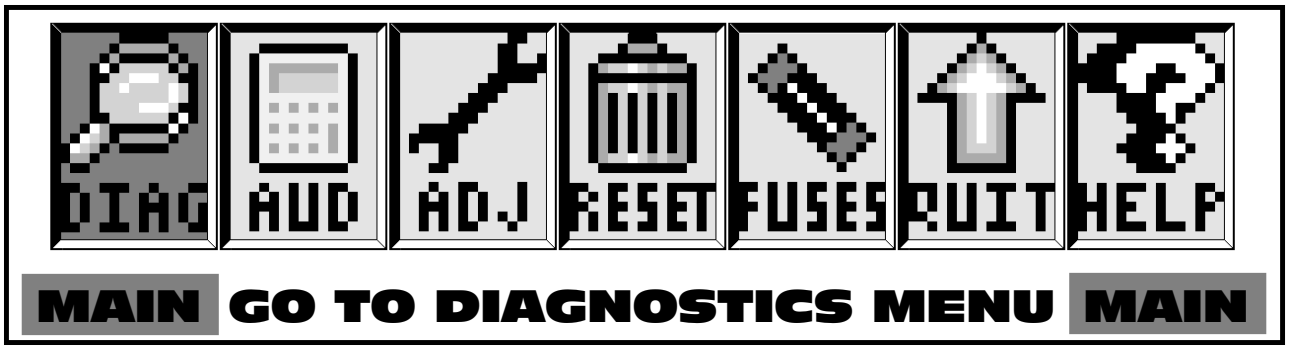

As the operator views the Menu Screen(s), the MORE MORE symbols indicates that there are more *Icons* to select in each direction. The *Icon* selected will blink. Pushing the **Black "ENTER" Button** (or **Start Button**) will select the *Icon* and the Menu Screen will change to the menu selected. Select the **"PREV"** *Icons* to move backwards through the menu levels. Select the **"QUIT"** *Icon* to completely exit the Service Mode.

View the **Portals™ Service Menu Icon Tree** on the next pages for a complete overview of all menus used in this system. View the last chapter (HELP) if more information is required. Selecting the "QUIT" *Icon* with the **Red "LEFT"** or **Green "RIGHT" Buttons** (or either **Flipper Button**), then pressing the **Black "ENTER" Button** (or **Start Button**) will exit the Service Mode. This applies to the large and small "QUIT" *Icons*.

The **chapters** in this **section**, which coincide with the **MAIN MENU**, will also provide more detailed information which could not fit in the display. Use both the manual and the display to help customize, troubleshoot and/or diagnose faults, if any.

Portals™ Service Menu Icon Tree for High Roller Casino Pinball Game

MAIN MENU

- **GO TO DIAGNOSTICS MENU**
- **GO TO AUDITS MENU**
- **GO TO ADJUSTMENTS MENU**
- **GO TO RESET MENU**
- **GO TO FUSES LIST** → GAME FUSES LISTING. Reference current Game Manual, Sec. 3, Chapter 6.
- **QUIT THIS SESSION** → Exits back to Attract Mode
- **GO TO HELP SCREEN** → Go To Help Screen **HELP SCREEN**. See the next page for **"Summary of Common Icons"** or reference Sec. 3, Chapter 7.

Go To Adjustments Menu **ADJUSTMENTS MENU**. Reference current Game Manual, Sec. 3, Chapter 4.

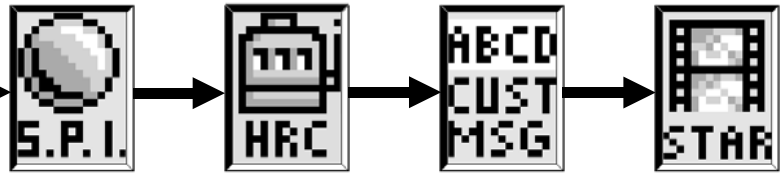

- **S.P.I. ADJUSTMENTS** → 1st Adjustment of Game Generic Group
- **HIGH ROLLER CASINO ADJUSTMENTS** → 1st Adjustment of Game Specific Group
- **CUSTOM MESSAGE** → Direct Access to Adjustment 34, Custom Message
- **FILM STAR RESET** → REQUEST INSTALLED (Back to Attract Mode)

Go To Reset Menu **RESET MENU**. Reference current Game Manual, Sec. 3, Chapter 5.

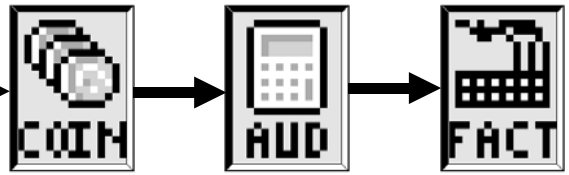

- **RESET COIN AUDITS** → REQUEST INSTALLED
- **RESET GAME AUDITS** → REQUEST INSTALLED
- **FACTORY RESET** → REQUEST INSTALLED (Back to Attract Mode)

Go To Audits Menu **AUDITS MENU**. Reference current Game Manual, Sec. 3, Chapter 3.

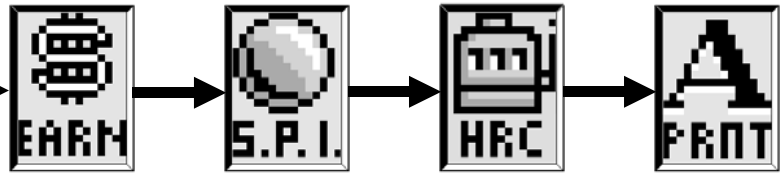

- **EARNINGS AUDITS** → 1st Audit of Game Earnings Group
- **S.P.I. AUDITS** → 1st Audit of Game Generic Group
- **HIGH ROLLER CASINO AUDITS** → 1st Audit of Game Specific Group
- **GO TO PRINTER MENU**

Go To Audits Menu **PRINTER SUB-MENU**. Reference current Game Manual, Sec. 3, Chapter 3.

- **QUICK PRINTOUT** → Special Equipment is required.
- **FULL PRINTOUT** → Special Equipment is required.
- **RESET PRINTER** → Nº of Copies Printed is reset.

Go To Diagnostics Menu **DIAGNOSTICS MENU**. Reference current Game Manual, Sec. 3, Chapter 2.

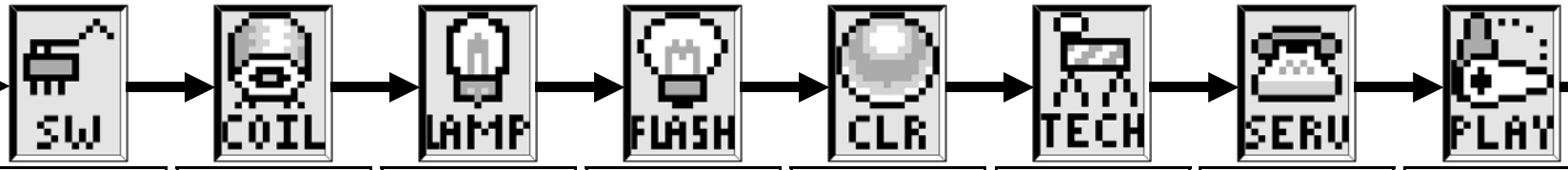

- **GO TO SWITCH MENU**
- **GO TO COIL MENU**
- **GO TO LAMP MENU**
- **TEST FLASH LAMPS** → IN TEST
- **CLEAR BALL TROUGH** → IN TEST
- **TECHNICIAN ALERT** → PLAYFIELD STATUS
- **SERVICE PHONE #** → 1-800-KICKERS (USA Setting)
- **BEGIN PLAY TEST** → IN TEST

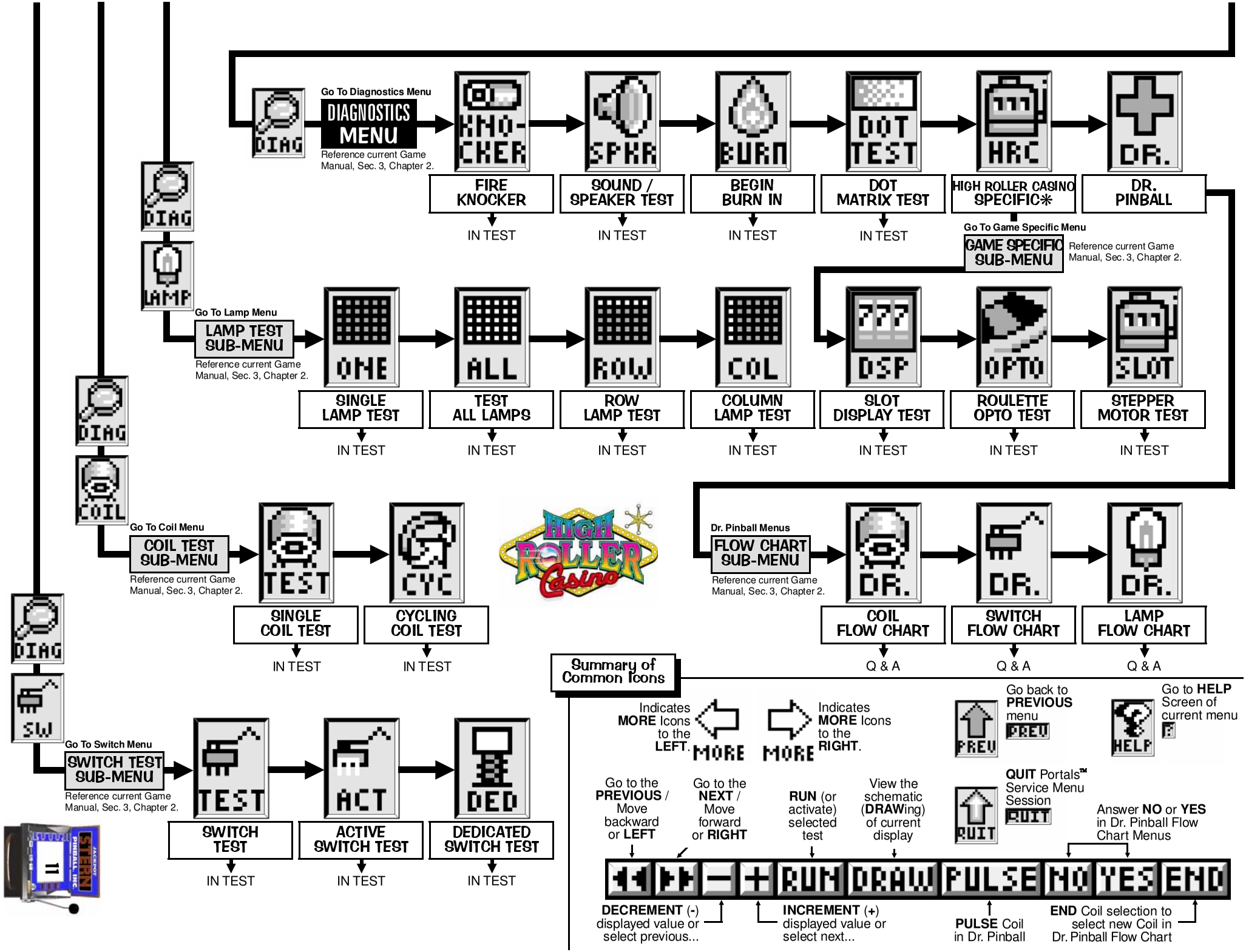
DIAG
Go To Diagnostics Menu
DIAGNOSTICS MENU
Reference current Game Manual, Sec. 3, Chapter 2.
KNO-CKER
FIRE KNOCKER
IN TEST
SPKR
SOUND / SPEAKER TEST
IN TEST
BURN
BEGIN BURN IN
IN TEST
DOT TEST
DOT MATRIX TEST
IN TEST
HRC
HIGH ROLLER CASINO SPECIFIC*
DR.
DR. PINBALL
Go To Game Specific Menu
GAME SPECIFIC SUB-MENU
Reference current Game Manual, Sec. 3, Chapter 2.
LAMP
Go To Lamp Menu
LAMP TEST SUB-MENU
Reference current Game Manual, Sec. 3, Chapter 2.
ONE
SINGLE LAMP TEST
IN TEST
ALL
TEST ALL LAMPS
IN TEST
ROW
ROW LAMP TEST
IN TEST
COL
COLUMN LAMP TEST
IN TEST
DSP
SLOT DISPLAY TEST
IN TEST
OPTO
ROULETTE OPTO TEST
IN TEST
SLOT
STEPPER MOTOR TEST
IN TEST
COIL
Go To Coil Menu
COIL TEST SUB-MENU
Reference current Game Manual, Sec. 3, Chapter 2.
TEST
SINGLE COIL TEST
IN TEST
CYC
CYCLING COIL TEST
IN TEST
HIGH ROLLER Casino
Dr. Pinball Menus
FLOW CHART SUB-MENU
Reference current Game Manual, Sec. 3, Chapter 2.
DR.
COIL FLOW CHART
Q & A
DR.
SWITCH FLOW CHART
Q & A
DR.
LAMP FLOW CHART
Q & A
SW
Go To Switch Menu
SWITCH TEST SUB-MENU
Reference current Game Manual, Sec. 3, Chapter 2.
TEST
SWITCH TEST
IN TEST
ACT
ACTIVE SWITCH TEST
IN TEST
DED
DEDICATED SWITCH TEST
IN TEST
Summary of Common Icons
Indicates MORE Icons to the LEFT.
MORE
MORE
Indicates MORE Icons to the RIGHT.
PREV
Go back to PREVIOUS menu
PREV
HELP
Go to HELP Screen of current menu
QUIT
QUIT Portals™ Service Menu Session
QUIT
Go to the PREVIOUS / Move backward or LEFT
Go to the NEXT / Move forward or RIGHT
RUN (or activate) selected test
View the schematic (DRAWing) of current display
Answer NO or YES in Dr. Pinball Flow Chart Menus
RUN
DRAW
PULSE
NO
YES
END
DECREMENT (-) displayed value or select previous...
INCREMENT (+) displayed value or select next...
PULSE Coil in Dr. Pinball
END Coil selection to select new Coil in Dr. Pinball Flow Chart

Portals™ Service Menu Example

This example will demonstrate activation of *Icons* in the **DIAGNOSTICS MENU**. The example will show activation of the "SW" *Icon* (**GO TO SWITCH MENU**). In this menu, the switches can be tested individually and also all active switches can be tested. Use the same technique to access all the *Icons* in the **Portals™ Service Menu**. Follow **Portals™ Service Menu Icon Tree** on the previous pages as a guide to help navigate through the entire system (Also, go to the chapter in this manual explaining the icon(s) selected.).

If the display is in any other menu other than the **MAIN MENU**, use the **Red "LEFT"** & **Green "RIGHT" Buttons** to select the "PREV" *Icon* and press the **Black "ENTER" Button** to activate the **ICON** thus moving back to the previous menu. Do so until **MAIN MENU** appears.

Chapters 2 through 7 will cover all menu items within the **Portals™ Service Menu**. The *Icon* is shown preceding the text. Find the *Icon* in the **Portals™ Service Menu** by navigating with the **Red** or **Green Buttons**. Each chapter started is from the **MAIN MENU**. Within the chapter, the sub-menu's will be covered sequentially with their explanation & function. If the operator *"gets lost"*, select and activate the "PREV" *Icon* until the display indicates **MAIN MENU**. For more help, see Chapter 7.

The "MORE" *symbols* are indicating that *"more icons"* are available which don't appear in the display and which way to move the selection to view the *Icons*.

Important Note:

Exit any sub-menu and return to the **MAIN MENU** by selecting & activating the "PREV" *Icons*. ***If no Icons appear in the display because of a testing function or special display (e.g. Help, Schematic Display, etc.), press any service button to exit to the previous menu or sub-menu.***

Selecting & activating the "QUIT" *Icon* from any display will exit the *Service Session.*

Selecting & activating the "HELP" *Icon* will show a help screen. (An explanation of each *Mini-Icon* at that level will cycle continuously until any active button is pressed.)

Example: From the **MAIN MENU**, use the **Red "LEFT"** or **Green "RIGHT" Buttons** to select the "DIAG" *Icon* (**GO TO DIAGNOSTICS MENU**).

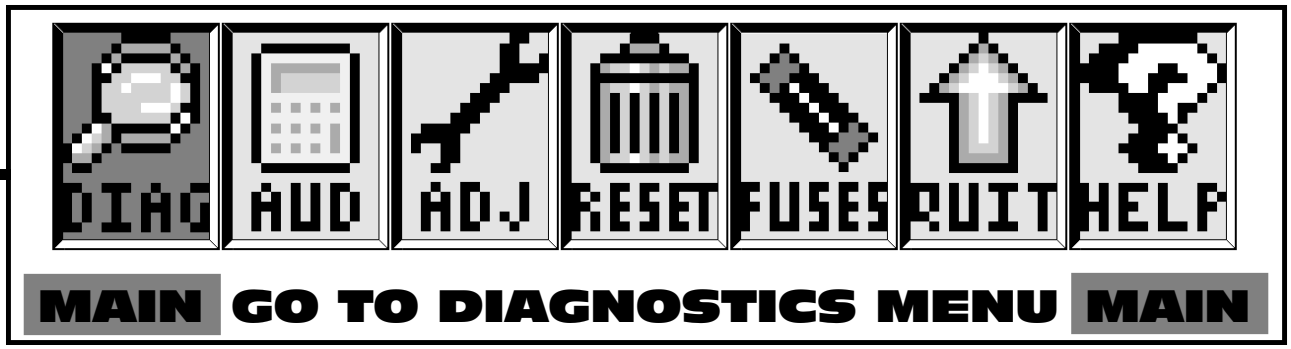

Press the **Black "ENTER" Button** to activate this **ICON**. This will bring up the **DIAGNOSTICS MENU**.

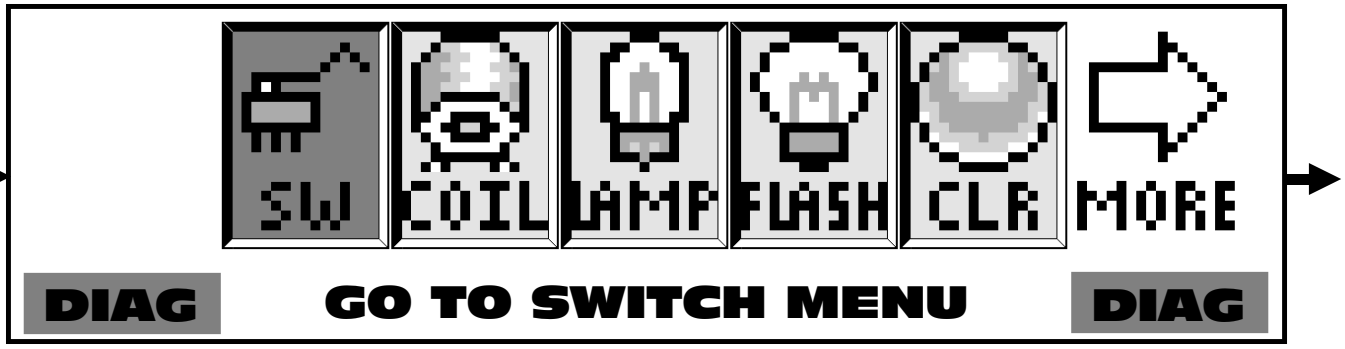

The **DIAGNOSTICS MENU** now appears with the "SW" *Icon* (**GO TO SWITCH MENU**) flashing. Press the **Black Button** to *activate* this icon. This will bring up the **SWITCH TEST MENU**.

The **SWITCH TEST MENU** now appears with the "TEST" *Icon* (**SWITCH TEST**) flashing:
Press the **Black "ENTER" Button** to *activate* this icon. This will bring up the **Switch Test Display**.

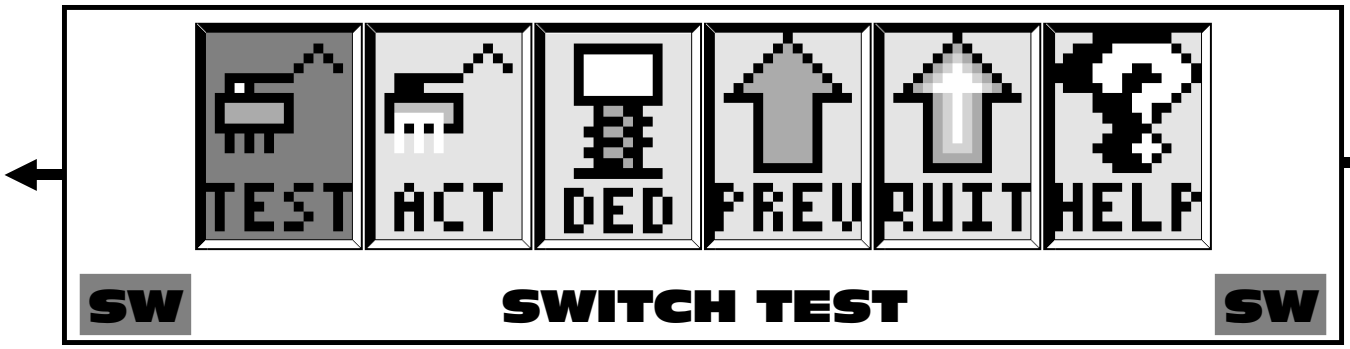

The **Switch Test Display** now appears.

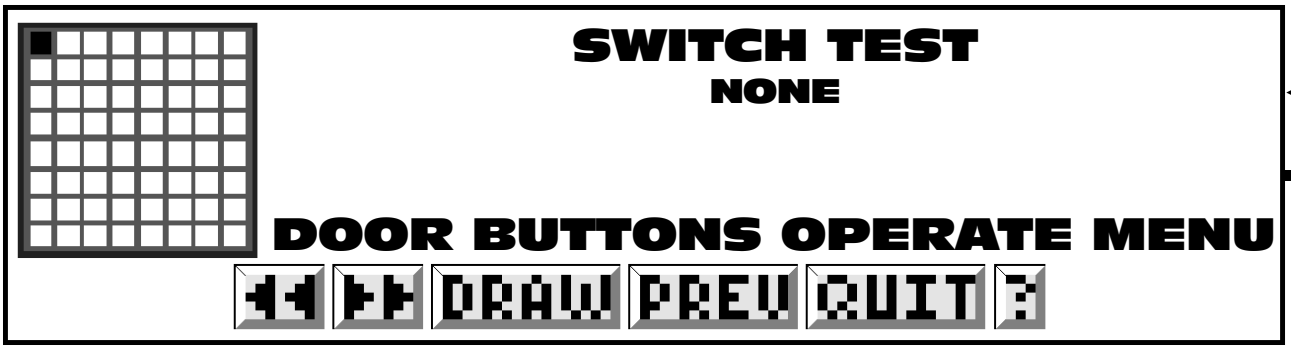

All switches can be tested one at a time (When possible, use a pinball to close any playfield switches; rolling the ball at Stand-Up Targets or over/under switches is suggested. Use finger for all non-playfield switches.) As each switch is closed, the respective Switch Matrix Grid Position (1-64) will be lit. To view the schematic for the switch selected, press the **Red** or **Green Buttons** to select the "DRAW" *Icon*. Press the **Black Button** to *activate* this icon. This will bring up the **Switch Schematic Display** for the switch being closed.

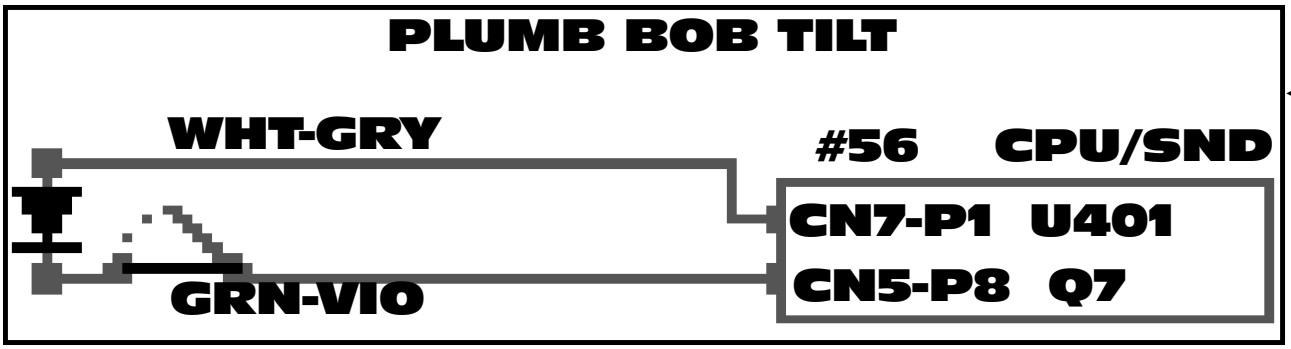

An example is shown with Switch #56, Plumb Bob Tilt, selected. The display describes the switch in the Switch Matrix which includes the name of the switch, the Return (Row) Wire and the Drive (Column) Wire, drive transistor, the part number (not shown in the above example) and the "Pin-Outs" from the CPU/Sound Board.

While in Switch or Active Switch Tests, the **Flipper & Start Buttons** are deactivated. Use the **Red "LEFT," Green "RIGHT"** and/or **Black "ENTER" Buttons** to select and activate the "**MINI-ICONS**" at the bottom of the display. In Switch Test, if the "Left Arrow" or "Right Arrow" *Icon* is activated, the display will go to the previous tests (Active and Dedicated Switch Tests). Use the **Red** or **Green Buttons** to change the selected **ICON** to "PREV"*Icon.* Press the **Black "ENTER" Button** to go to the previous menu.

Note:
In **Dedicated Switch Test**, the **Flipper & Start Buttons** are to be used instead of the **Red**, **Green** & **Black Service Buttons**, as these buttons are deactivated for this test.

Exit out of the sub-menu by activating the big "PREV" *Icon* in the menu. This will bring up the **DIAGNOSTICS MENU**. The Switch Test Session is now complete. See the next page about exiting the **Portals™ Service Menu**.

Exiting the Portals™ Service Menu

All *Icons* will be covered in the chapters of this section with the exception of the "QUIT" *Icon*, in the **MAIN MENU**. Both the large and small *Icons* if selected and activated, will exit the user from the **Portals™ Service Menu**. The display will return back to the **ATTRACT MODE**! To re-enter the **Portals™ Service Menu** follow the instructions at the beginning of this chapter.

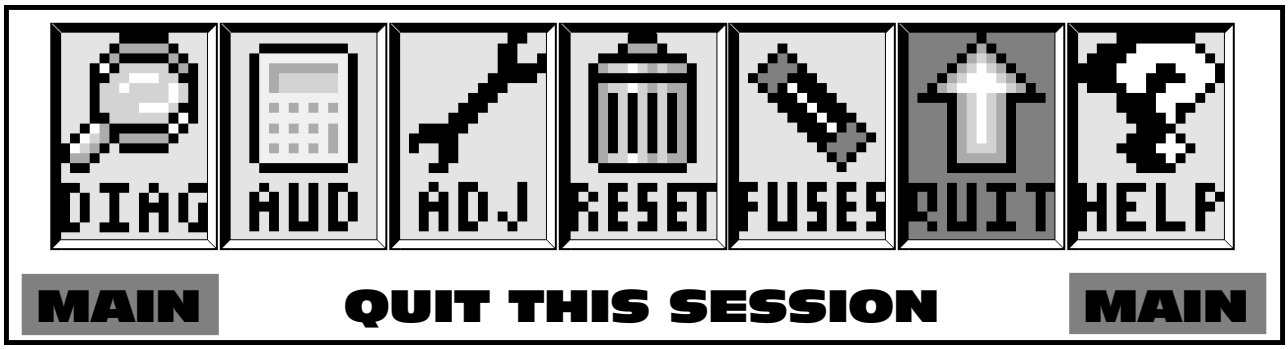

If more help is required, see Chapter 7 of this section, and view the various help displays in the game.

Your Notes

Go To Diagnostics Menu

Special Note: If the ***display flashes*** **"OPEN THE DOOR"** the game is indicating that memory has been corrupted. This is caused be either failure in memory (e.g. batteries are dead and/or faulty **RAM**) or upon installation of updated version of game code. Opening the **Coin Door** will initiate a *Factory Restore (Reset)*, by opening the ***Memory Protect Switch***. Check battery voltage at **VBATT Test Point** on the **CPU/Sound Board**.

Overview

The **Portals™ Service Menu System** provides tests for sounds, display, lamps, switches and coils. Each feature may be tested manually or automatically after entering the **Portals™ Service Menu** (see Chapter 1 of this section). Select the "DIAG" *Icon* from the **MAIN MENU** to go to the **DIAGNOSTICS MENU**. The automatic tests (e.g. ***Cycling Coils***, ***Test Flash Lamps***) may be used for a quick verification of automatic test functions and the manual tests (***Begin Play Test***, ***Single Lamp / All / Row / Column Tests***, and ***Game Specific Test***.) may be used for troubleshooting. All *Icons* and there usages are explained throughout this chapter.

During game play, activation of switches and operation of coils with associated switches are monitored. If the **CPU/Sound Board** does not detect a switch transition ("Stuck Open" / "Stuck Closed") for 50 games, it is considered faulty. When operation of a coil should close or open a switch and does not, the coil is considered faulty. In the Attract Mode, faulty switches and coils (if any) are reported (Select the "TECH" *Icon*, ***Technician Alert***, from the **DIAGNOSTICS MENU**). *Note that reporting of an unused switch does not constitute a problem and that a bad coil could mean that the associated switch requires adjustment.*

⚠ **CAUTION:** Remove pinballs from the Ball Trough prior to lifting the playfield for servicing. This can easily be done in the **Portals™ Service Menu System**. Select the "DIAG" *Icon* from the **MAIN MENU** to go to the **DIAGNOSTICS MENU**. Select the "CLR" *Icon* to enter the **CLEAR BALL TROUGH MENU**. Select the "RUN" *Icon* & press the **Start Button** to remove one ball at a time. This is also useful to retrieve one ball for game testing in ***Begin Play Test*** & ***Game Specific Test***. ***Important:*** The **Power Interlock Switch** must be pulled out.

GO TO DIAGNOSTICS MENU

With the game in the Attract Mode, open the Coin Door and press the **Black "BEGIN TEST" Button**. Select the "DIAG" *Icon* in the **MAIN MENU** with either **Flipper** or **Red "LEFT"** & **Green "Right" Buttons** (upon entry of the **Portals™ Service Menu**, the system defaults with the selection of the "DIAG" *Icon* flashing) and press the **Start** or **Black "ENTER" Buttons**. The **DIAGNOSTICS MENU** appears.

The "MORE" *symbols* are indicating that *"more icons"* are available which don't appear in the display and which way to move the selection to view the *Icons*.

Important Notes:

Exit any sub-menu and return to the **MAIN** MENU by selecting & activating the "PREV" *Icons*. If no *Icons* appear in the display because of a testing function or special display (e.g. "Help"), press any button to exit.

Selecting & activating the "QUIT" *Icon* from any display will exit the Service Session.

Selecting & activating the "HELP" *Icon* from any display will show a help screen. (An explanation of each *Mini-Icon* at that level will cycle continuously until any active button is pressed.)

In Diagnostics, selecting & activating the "-" or "+" *Icons* moves test forwards/backwards. Selecting & activating the "RUN" *Icon* repeats the test on the coil or flash lamp left off at. Selecting & activating the "ARROW" *Icons* moves between tests in the sub-menu. Selecting & activating the "DRAW" *Icon* will show the schematic for that switch or coil.

Some tests require navigation through the menu(s) and selection of the *Icons* with **ONLY** the **Red "LEFT," Green "RIGHT"** and **Black "ENTER" Buttons**. This is required in ***Switch*** & ***Active Switch Tests***, as the **Flipper** & **Start Buttons** are a part of the test.

In ***Single Coil Test***, ***Cycling Coil Test***, ***Test Flash Lamps***, ***Clear Ball Trough, Begin Play Test*** & ***Casino Specific*** Menu's, ***the*** **Power Interlock Switch** (inside Coin Door) must be pulled out. (See ***Access & Use*** in Chapter 1 of this section for the location.)

If the Power Interlock Switch is not pulled out, all electro-mechanical devices (such as Coils) cannot be tested (20v & 50v DC power is disabled). Closing the Coin Door will automatically reset this switch.

Go To Switch Menu

From the **DIAGNOSTICS MENU**, select the "SW" *Icon* with either **Red "LEFT"** or **Green "RIGHT" Button** and press the **Black "ENTER" Button**. Switches are configured in an 8 x 8 Matrix of Columns (Switch Drives) and Rows (Switch Returns) with up to 64 switches possible. The Switch Test Menu consists of three (3) parts: Switch Test, Active Switches, and Dedicated Switch Test.

Note: The Flipper & Start Buttons are deactivated during Switch Tests.

Switch Test

To initiate, from the **SWITCH MENU**, select the "TEST" *Icon* with the **Red** or **Green Button** & press the **Black Button**. In Switch Test, close each switch and observe the display. The display will describe the switch in the Switch Matrix, which includes the switch name, Return (Row) Wire, Drive (Column) Wire, Part Nº, and the "Pin-Outs" from the CPU/SOUND Board. When the switch is released, the information of the last switch closed will remain in the display until another switch is closed or the test is exited. To view the switch schematic, select the "DRAW" *Mini-Icon* with the **Red** or **Green Button** & press the **Black Button**.

Active Switch Test

To initiate, from the **SWITCH MENU**, select the "ACT" *Icon* with either **Red** or **Green Button** & press the **Black Button**. If still in a previous test, select the "PREV" *Icon* to return to Switch Menu or selecting either of the "ARROW" *Icons* will move through the tests. If any switches are stuck closed (or made from the presence of a pinball), the display sequences through the Switch Names, Return (Row) Wire, Drive (Column) Wire, Drive Transistor, Part Nº, and the "Pin-Outs" from the CPU/SOUND Board. This cycle continues until all switches are cleared or until the test is exited.

Dedicated Switch Test

To initiate, from the **SWITCH MENU**, select the "DED" *Icon* with either **Flipper Button** & press the **Start Button** (The service switches are deactivated during this test.). The display will describe the switch which includes the Switch Name, Return (Row) Wire, Drive (Column) Wire, Part Nº, and the "Pin-Outs" from the CPU/SOUND Board.

SWITCH MATRIX GRID & DEDICATED SWITCHES

Diode **O**n **T**erminal **S**trip :

Row (Return) \ Column (Drive)	1: Q1 GRN-BRN CN5-P1	2: Q2 GRN-RED CN5-P3	3: Q3 GRN-ORG CN5-P4	4: Q4 GRN-YEL CN5-P5	5: Q5 GRN-BLK CN5-P6	6: Q6 GRN-BLU CN5-P7	7: Q7 GRN-VIO CN5-P8	8: Q8 GRN-GRY CN5-P9
1: U400 WHT-BRN CN7-P9	LEFT BUTTON (UK ONLY) on Cabinet side 1	LEFT CHIP [S.U. TRGT] Under Playfield 9	2 / HEARTS DROP [TARGET] On Assembly 17	3-BALL LOCK LOW [WIRE RAMP] On Assembly 25	TOP SLOT OPTO - TOP ENTRY On Assembly 33	ROULETTE WHEEL OPTO 1 On Assembly 41	LEFT BUMPER On Assembly 49	LEFT OUTLANE Under Playfield 57
2: U400 WHT-RED CN7-P8	4TH COIN SLOT On Coin Door 2	ROLL DICE (S.U. TRGT) Under Playfield 10	2/DIAMONDS DROP [TARGET] On Assembly 18	3-BALL LOCK MIDDLE [WIRE RAMP] On Assembly 26	MIDDLE SLOT OPTO - BASH On Assembly 34	ROULETTE WHEEL OPTO 2 On Assembly 42	RIGHT BUMPER On Assembly 50	LEFT RETURN LANE Under Playfield 58
3: U400 WHT-ORG CN7-P7	6TH COIN SLOT On Coin Door 3	4-BALL TROUGH #1 (LEFT) On Assembly 11	4/DIAMONDS DROP [TARGET] On Assembly 19	3-BALL LOCK HIGH [WIRE RAMP] On Assembly 27	BOT. SLOT OPTO - R. ENTRY On Assembly 35	ROULETTE WHEEL OPTO 3 On Assembly 43	BOTTOM BUMPER On Assembly 51	LEFT SLINGSHOT [BOTTOM] On Assembly 59
4: U400 WHT-YEL CN7-P6	RIGHT COIN SLOT On Coin Door 4	4-BALL TROUGH #2 On Assembly 12	A / SPADES DROP [TARGET] Under Playfield 20	LEFT 21 HIT STANDUP [TARGET] Under Playfield 28	MIDDLE RAMP LEFT ENTRY On Ramp Assy. 36	ROULETTE WHEEL OPTO 4 On Assembly 44	2ND UP / DOWN RAMP [SLOT MACH.] On Assembly 52	RIGHT OUTLANE Under Playfield 60
5: U401 WHT-GRN CN7-P5	CENTER COIN SLOT / DBA On Coin Door 5	4-BALL TROUGH #3 On Assembly 13	A / DIAMONDS STANDUP [TARGET] On Assembly 21	RIGHT 21 HIT STANDUP [TARGET] Under Playfield 29	MIDDLE RAMP RIGHT ENTRY On Ramp Assy. 37	LEFT ORBIT Under Playfield 45	ROULETTE SPIN Cabinet Front 53	RIGHT RETURN LANE Under Playfield 61
6: U401 WHT-BLU CN7-P3	LEFT COIN SLOT On Coin Door 6	4-BALL TROUGH VUK OPTO On Assembly 14	JOKER STANDUP [TARGET] Under Playfield 22	UPPER RIGHT STANDUP [TARGET] Under Playfield 30	1ST UP / DOWN RAMP [SLOT MACH.] On Assembly 38	RIGHT ORBIT Under Playfield 46	START BUTTON Cabinet Front 54	RIGHT SLINGSHOT [BOTTOM] On Assembly 62
7: U401 WHT-VIO CN7-P2	5TH COIN SLOT On Coin Door 7	4-BALL STACKING OPTO On Assembly 15	3 / DIAMONDS STANDUP [TARGET] On Assembly 23	RIGHT CHIP [TARGET] Under Playfield 31	LEFT ORBIT GATE Above Playfield 39	TOP LEFT SLINGSHOT On Assembly 47	SLAM TILT On Coin Door 55	NOT USED 63
8: U401 WHT-GRY CN7-P1	RIGHT BUTTON (UK ONLY) on Cabinet side 8	SHOOTER LANE Under Playfield 16	SPINNER On Assembly 24	POP ENTRY OPTO [BALL LOCK] Under Playfield 32	LEFT RAMP EXIT On Ramp Assy. 40	TOP RIGHT SLINGSHOT On Assembly 48	PLUMB BOB TILT Inside Cabinet 56	NOT USED 64

GND \ IC U206 INPUTS	Ground BLK CN6-P1, -P11
1: U206 GRY-BRN CN6-P2	#1 LEFT FLIPPER BUTTON in Cabinet side D9-1
2: U206 GRY-RED CN6-P3	#2 LEFT FLIPPER E.O.S (End-of-Stroke) in Cabinet side D9-2
3: U206 GRY-ORG CN6-P4	#3 RIGHT FLIPPER BUTTON in Cabinet side D9-3
4: U206 GRY-YEL CN6-P6	#4 RIGHT FLIPPER E.O.S. (End-of-Stroke) in Cabinet side D9-4
5: U206 NOT USED GRY-GRN CN6-P7	#5 NOT USED D9-5
6: U206 GRY-BLU CN6-P8	#6 VOLUME (RED BUTTON) (In Test: LEFT) on Coin Door D9-6
7: U206 GRY-VIO CN6-P9	#7 SERV. CRED. (GREEN BUTTON) (In Test: RIGHT) on Coin Door D9-7
8: U206 GRY-BLK CN6-P10	#8 BEGIN TEST (BLACK BUTTON) (In Test: ENTER) on Coin Door D9-8

Typical Switch Schematic & Wiring

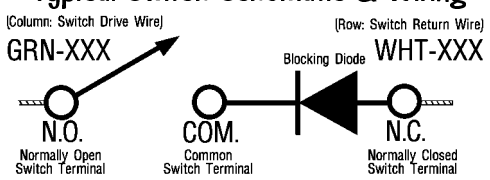

Note:
All Switches require diodes. Some diodes are located on Terminal Strips OR Diode Boards (under playfield) & not on the switch itself.
Diode **O**n **T**erminal **S**trip
Diode **O**n **D**iode **B**oard

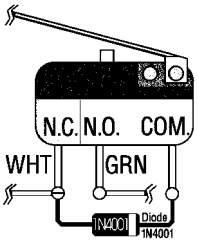

Dedicated Switch Schem.

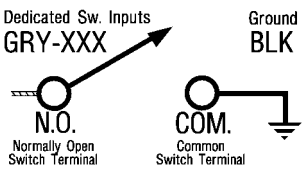

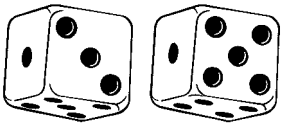

Switch Matrix Grid Descriptions with Part Numbers and Locations

The Switch locations correspond with the Switch Nº in the Part Number Table shown & the Switch Matrix Grid (previous page).

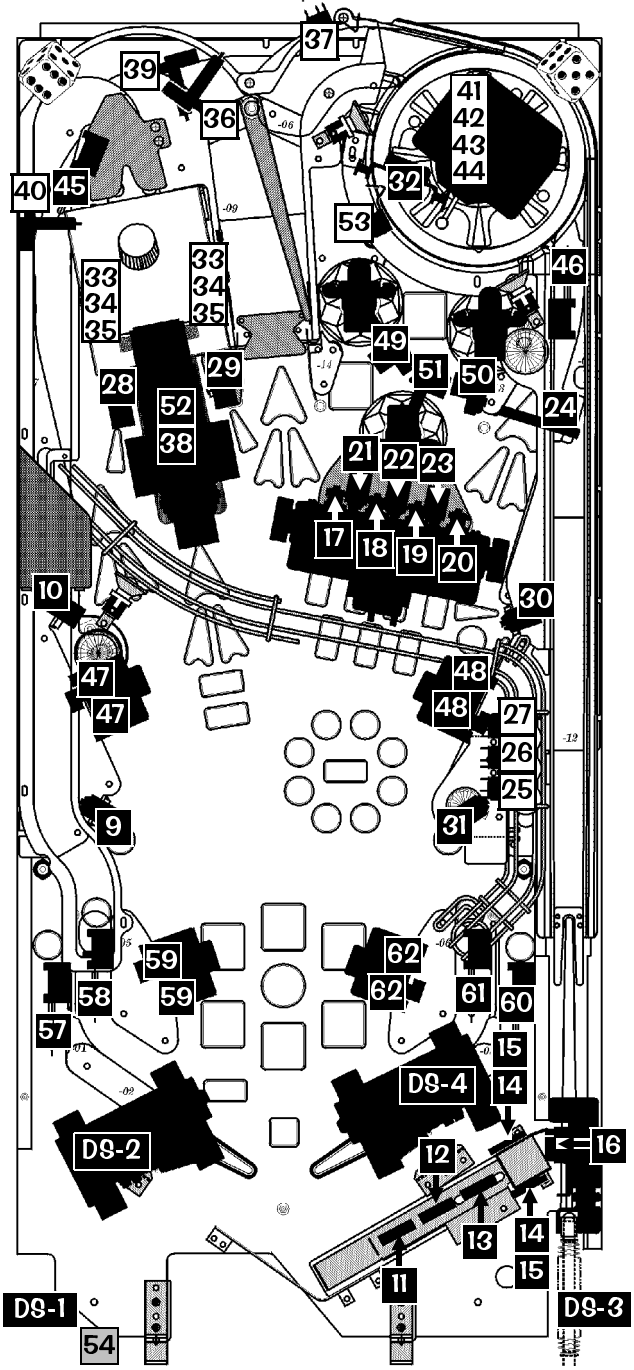

‡ Sw. 14 / Sw. 15 have both REC/TRANS on 1 board respectively.
Sw. 33, 34, 35 are located on 1 PCB each for Trans. & Rec.

DOTS: Diode **O**n **T**erminal **S**trip, or **DODB**: **D**iode **O**n **D**iode **B**oard

Legend Note:

☐ = Switches mounted above playfield.

■ = Switches mounted below playfield.

* The following switches are located in the cabinet and are not noted in the diagram above:

2 **4** **5** **6**

The following switches are not used (**1/8** are **UK Only**):

1 **8** **52** **53** **63** **64**

Switches for *Future Use:* **3 & 7**

Sw. Nº	Col. Nº	Row Nº	See Note:	Switch Matrix Description		Part Nº
				Note: The ¥ Coin Switch (for Japan) is 180-5091-00		
1	1	1		LEFT BUTTON (UK ONLY)		180-5160-00
2*	1	2		4TH COIN SLOT		180-5024-00
3*	1	3		*6TH COIN SLOT*		*(Future Use)*
4*	1	4		RIGHT COIN SLOT		180-5024-00
5*	1	5		CENTER COIN SLOT / DBA		
6*	1	6		LEFT COIN SLOT		
7*	1	7		*5TH COIN SLOT*		*(Future Use)*
8	1	8		RIGHT BUTTON (UK ONLY)		180-5160-00
9	2	1		LEFT CHIP		500-6139-01
10	2	2		ROLL DICE		500-6228-04
11	2	3		4-BALL TROUGH #1 (LEFT)		180-5119-02
12	2	4		4-BALL TROUGH #2		
13	2	5		4-BALL TROUGH #3		
14‡	2	6		4-BALL TROUGH VUK OPTO	BOT TRANS: BOT REC:	515-5173-00 515-5174-00
15‡	2	7		4-BALL STACKING OPTO	TOP TRANS: TOP REC:	515-5173-00 515-5174-00
16	2	8		SHOOTER LANE		180-5100-01
17	3	1	DOTS	2 / HEARTS DROP		180-5158-00
18	3	2	DOTS	2 / DIAMONDS DROP		
19	3	3	DOTS	4 / DIAMONDS DROP		
20	3	4	DOTS	A / SPADES		
21	3	5		A / DIAMONDS		500-6189-01R
22	3	6		JOKER STANDUP		
23	3	7		3 / DIAMONDS STANDUP		
24	3	8		SPINNER		180-5010-04
25	4	1		3-BALL LOCK LOW		180-5119-02
26	4	2		3-BALL LOCK MIDDLE		
27	4	3		3-BALL LOCK HIGH		
28	4	4		LEFT 21 HIT STANDUP		500-6138-02
29	4	5		RIGHT 21 HIT STANDUP		500-6139-02
30	4	6		UPPER RIGHT STANDUP		500-6075-01R
31	4	7		RIGHT CHIP		500-6139-01
32	4	8		POP ENTRY OPTO	TRANS: REC:	520-5082-00 520-5083-01
33	5	1		TOP SLOT OPTO - TOP	TRANS:	515-7121-01-65
34	5	2		MID SLOT OPTO - BASH	REC:	515-7121-00-65
35	5	3		BOT. SLOT OPTO - R. ENTRY		***See Note***
36	5	4		MIDDLE RAMP LEFT ENTRY	**on Gate**	180-5087-00
37	5	5		MIDDLE RAMP RIGHT ENTRY		180-5093-00
38	5	6		1ST UP / DOWN RAMP		180-5119-02
39	5	7		LEFT ORBIT GATE	**on Gate**	180-5087-00
40	5	8		LEFT RAMP EXIT	**on Gate**	
41	6	1		ROULETTE WHEEL OPTO 1		520-5194-01
42	6	2		ROULETTE WHEEL OPTO 2		
43	6	3		ROULETTE WHEEL OPTO 3		
44	6	4		ROULETTE WHEEL OPTO 4		
45	6	5		LEFT ORBIT	**on Rt. Mount R/O**	500-6227-02
46	6	6		RIGHT ORBIT	**on Rt. Mount R/O**	
47	6	7		TOP LEFT SLINGSHOT	**Leaf Sw. X2**	180-5054-00
48	6	8		TOP RIGHT SLINGSHOT	**Leaf Sw. X2**	
49	7	4		LEFT BUMPER		180-5015-03
50	7	2		RIGHT BUMPER		
51	7	3		BOTTOM BUMPER		
52	7	4		2ND UP/DOWN RAMP		180-5175-00
53	7	5		ROULETTE SPIN		180-5119-02
54	7	6		START BUTTON	**Switch Only**	180-5174-00
55*	7	7		SLAM TILT	**On Coin Door**	180-5022-00
56*	7	8		PLUMB BOB TILT	HANGER CONTACT	535-5319-00 535-7563-01
57	8	1		LEFT OUTLANE	**on Rt. Mount R/O**	500-6227-02
58	8	2		LEFT RETURN LANE	**on Rt. Mount R/O**	
59	8	3		LEFT SLINGSHOT	**Leaf Sw. X2**	180-5054-00
60	8	4		RIGHT OUTLANE	**on Rt. Mount R/O**	500-6227-02
61	8	5		RIGHT RETURN LANE	**on Rt. Mount R/O**	
62	8	6		RIGHT SLINGSHOT	**Leaf Sw. X2**	180-5054-00
63	8	7		NOT USED		
64	8	8		NOT USED		

Section 3, Chapter 2:
Go To Diagnostics Menu

Go To Coil Menu

From the **DIAGNOSTICS MENU**, select the "COIL" *Icon* with either **Red "LEFT"** or **Green "RIGHT" Button** and press the **Black "ENTER" Button**. The coils are listed in groups. Coils 01-16 are typically High Current Coils (although Low Current Coils may be used in these positions & will be noted). Coils 17-32 are typically Low Current Coils. Flash Lamps are typically used in positions 26-32 (although may be used in any position & will be noted), read **Single Coil Test** below.

Single Coil Test

To initiate, from the **COIL MENU**, select the "TEST" *Icon* with either **Red** or **Green Button** and press the **Black Button**. Ensure the **Power Interlock Switch** is pulled out. Select either the "-" or "+" *Icons*. Start with the "+" *Icon* to start the manual Coil Test from #1 (The test runs through all Coils and Flash Lamps #1-#32 & AUX 1-3 *(Auxilliary Positions are Optional UK Only)*. Press the **Black Button** on the "+" *Icon*, as each coil is selected, the display will describe the Coil or Flash Lamp Name with the corresponding number, the wire with colors, the "Pin-Outs" from the I/O Power Driver Board, the Coil Voltage & Gauge-Turns (e.g. 23-800). Press the **Black Button** again to move forward in the test. To test and view a particular Coil or Flash Lamp, select the "RUN" *Icon* and press the **Black Button**. Each time the **Black Button** is pushed, the Coil or Flash Lamp will fire on the Playfield and/or Backbox, with the display indicating the Coil or Flash Lamp information. Continue with the same procedure to run through the entire test.

Important: The **Power Interlock Switch** must be pulled out for this *test to function* while the **Coin Door** is **OPEN**.

Cycling Coil Test

To initiate, from the **COIL MENU**, select the "CYC" *Icon* with either **Red** or **Green Button** and press the **Black Button**. If still in a previous test, select the "PREV" *Icon* to return to Coil Menu or selecting either of the "ARROW" *Icons* will move to Cycling Coil Test (selecting agaIn will return to Coil Test). The test pulses each regular Coil or Flash Lamp sequentially (cycling) on the Playfield and Backbox. The display indicates "CYCLING COILS."

Important: The **Power Interlock Switch** must be pulled out for this *test to function* while the **Coin Door** is **OPEN**.

Coil & Flash Lamp Descriptions

#	Type	Coil / Flash Lamp Descriptions
1	Coil	TROUGH UP-KICKER (VUK) (26-1200)
2	Coil	AUTO LAUNCH (22-600)
3	Coil	DROP TARGET RESET (23-1100)
4	Coil	NOT USED
5	Coil	SLOT HANDLE (32-1800)
6	Coil	NOT USED
7	Coil	ROULETTE WHEEL MOTOR
8	Flash	FLASH: ROULETTE (#906 Bulb)
9	Coil	LEFT BUMPER (26-1200)
10	Coil	RIGHT BUMPER (26-1200)
11	Coil	BOTTOM BUMPER (26-1200)
12	Coil	NOT USED
13	Coil	ORBIT MAGNET (24-780)
14	Coil	CENTER DIVERTER (23-1100)
15	Coil	LEFT FLIPPER [50V RED/YEL] (22-900)
16	Coil	RIGHT FLIPPER [50V RED/YEL] (22-1080)

#	Type	Coil / Flash Lamp Descriptions
17	Coil	LEFT SLINGSHOT (23-800)
18	Coil	RIGHT SLINGSHOT (23-800)
19	Coil	TOP LEFT SLINGSHOT (23-800)
20	Coil	TOP RIGHT SLINGSHOT (23-800)
21	Flash	FLASH: LOCK BALL (#906 Bulb)
22	Coil	POPS ENTRY POST (27-1500)
23	Coil	BALL LOCK POST (27-1500)
24	Coil	(OPTIONAL COIN METER)
25	Coil	LEFT RAMP DIVERTER (27-1500)
26	Coil	STEPPER MOTOR (RED)
27	Coil	STEPPER MOTOR (GREEN)
28	Coil	STEPPER MOTOR (BLACK)
29	Coil	STEPPER MOTOR (BLUE)
30	Flash	FLASH: DIVERTER (#906 Bulb)
31	Flash	FLASH: POPS*2 (#89 Bulb)
32	Flash	FLASH: SLOT MACHINE (#906 Bulb)

See the next three (3) pages for the **Coil & Flash Lamp Location Maps** (corresponds to above tables), **Coils Detailed Chart Table** & the **Backbox I/O Power Driver Board Detailed Wiring Diagram**.

Typical Coil Wiring

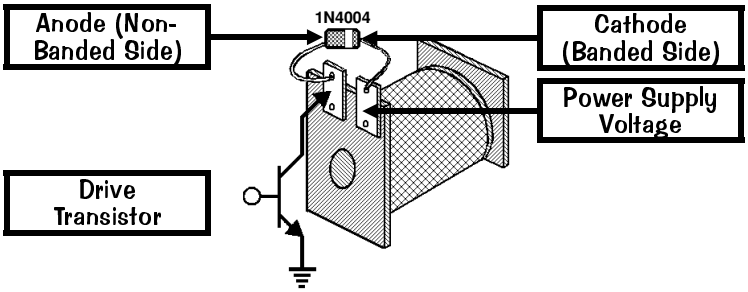

Note:
All Coils require diodes. Some diodes are located on Terminal Strips (under playfield) & not on the coil itself.
D iode
O n
T erminal
S trip

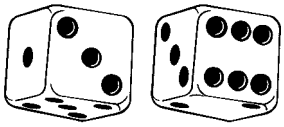

Coil & Flash Lamp Locations

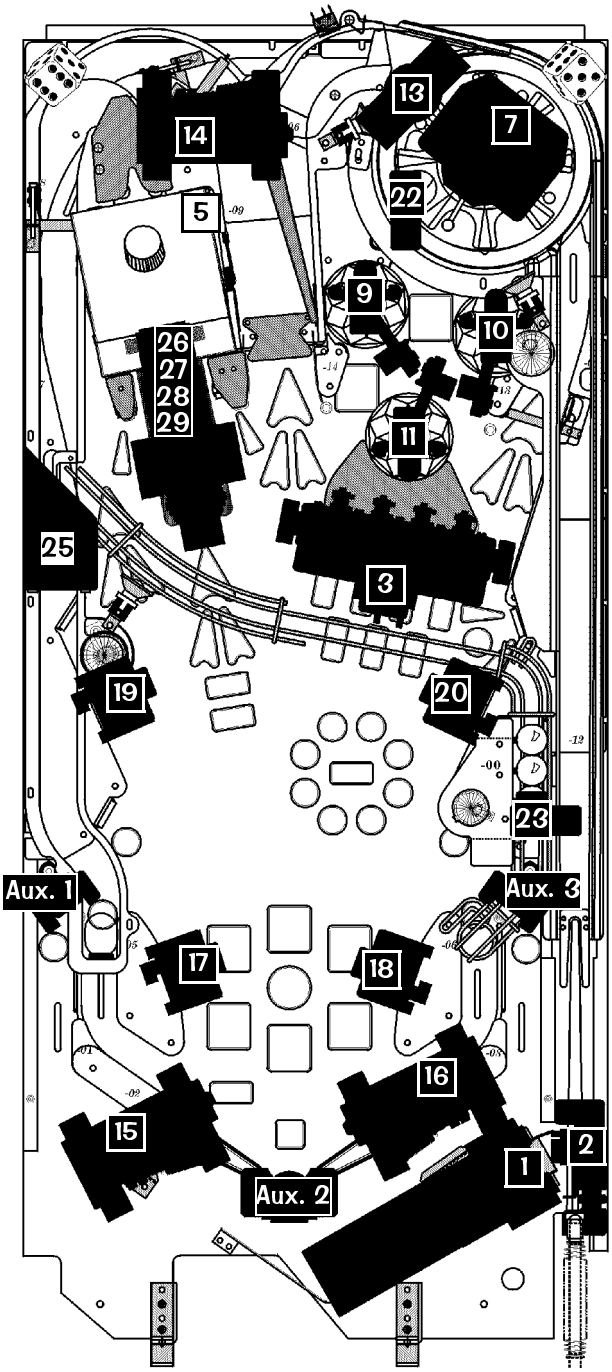

Use the previous page and the following two (2) pages in conjunction with above Coil and Flash Lamp Maps.

Legend Note:

☐ = Coils and Flash Lamps mounted above playfield.

■ = Coils and Flash Lamps mounted below playfield.

The following Bulb Types are used for Flash Lamps:

#89 Bulb
(Bayonet)
165-5000-89

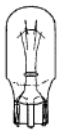

#906 Bulb
(Wedge Base)
165-5004-00

The following Coil is optional:

24

The following Coil(s) are Not Used:

4 6 12

The following Coils are for **UK Only**:

Aux. 1 Aux. 2 Aux. 3

Section 3, Chapter 2:
Go To Diagnostics Menu

From the Main Menu in Portals™ GO TO DIAGNOSTICS MENU →

From the Diagnostics Menu GO TO COIL MENU →

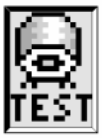

From the Coil Menu GO TO COIL TEST →

From the Coil Menu GO TO CYCLING COILS

COILS DETAILED CHART TABLE

High Current Coils Group 1		Drive Transistor (D.T.)	Driver Ouput Board	D.T. Control Line Color	D.T. Control Line Connect	Power Line Color	Power Line Connnection	Power Voltage	Coil GA-Turn or Bulb Type
#1	TROUGH UP-KICKER	Q1	I/O Pwr. Drvr.	BRN-BLK	J8-P1	YEL-VIO	J10-P4/5	50v DC	26-1200 090-5044-00T
#2	AUTO LAUNCH	Q2	I/O Pwr. Drvr.	BRN-RED	J8-P3	YEL-VIO	J10-P4/5	50v DC	22-600 090-5023-00B
#3	DROP TARGET RESET	Q3	I/O Pwr. Drvr.	BRN-ORG	J8-P4	YEL-VIO	J10-P4/5	50v DC	23-1100 090-5030-00T
#4	NOT USED	Q4	I/O Pwr. Drvr.	BRN-YEL	J8-P5				
#5	SLOT HANDLE	Q5	I/O Pwr. Drvr.	BRN-GRN	J8-P6	YEL-VIO	J10-P4/5	50v DC	32-1800 090-5031-00T
#6	NOT USED	Q6	I/O Pwr. Drvr.	BRN-BLU	J8-P7				
#7	ROULETTE WHEEL MOTOR	Q7	I/O Pwr. Drvr.	BRN-VIO	J8-P8	BRN	J7-P1	20v DC	Motor 041-5078-00
#8	FLASH: ROULETTE	Q8	I/O Pwr. Drvr.	BRN-GRY	J8-P9	YEL-VIO	J10-P4/5	50v DC	#906 Bulb 165-5004-00

High Current Coils Group 2		Drive Transistor (D.T.)	Driver Ouput Board	D.T. Control Line Color	D.T. Control Line Connect	Power Line Color	Power Line Connnection	Power Voltage	Coil GA-Turn
#9	LEFT BUMPER	Q9	I/O Pwr. Drvr.	BLU-BRN	J9-P1	YEL-VIO	J10-P4/5	50v DC	26-1200 090-5044-00T
#10	RIGHT BUMPER	Q10	I/O Pwr. Drvr.	BLU-RED	J9-P2	YEL-VIO	J10-P4/5	50v DC	26-1200 090-5044-00T
#11	BOTTOM BUMPER	Q11	I/O Pwr. Drvr.	BLU-ORG	J9-P4	YEL-VIO	J10-P4/5	50v DC	26-1200 090-5044-00T
#12	NOT USED	Q12	I/O Pwr. Drvr.	BLU-YEL	J9-P5				
#13	ORBIT MAGNET DOTS	Q13	I/O Pwr. Drvr.	BLU-GRN	J9-P6	VIO-YEL BLK	J10-P3	50v DC	24-780 090-5061-00
#14	CENTER RAMP DIVERTER	Q14	I/O Pwr. Drvr.	BLU-BLK	J9-P7	RED-YEL GRY-YEL	J10-P1/2	50v DC	23-1100 090-5030-00T
#15	LEFT FLIPPER (50v RED/YEL)	Q15	I/O Pwr. Drvr.	ORG-GRY	J9-P8	RED-YEL GRY-YEL	J10-P1/2	50v DC	22-900 090-5020-20T
#16	RIGHT FLIPPER (50v RED/YEL)	Q16	I/O Pwr. Drvr.	ORG-VIO	J9-P9	RED-YEL BLU-YEL	J10-P1/2	50v DC	22-1080 090-5032-00T

Low Current Coils Group 1		Drive Transistor (D.T.)	Driver Ouput Board	D.T. Control Line Color	D.T. Control Line Connect	Power Line Color	Power Line Connnection	Power Voltage	Coil GA-Turn or Meter #
#17	LEFT SLINGSHOT [BOTTOM]	Q17	I/O Pwr. Drvr.	VIO-BRN	J7-P2	BRN	J7-P1	20v DC	23-800 090-5001-00T
#18	RIGHT SLINGSHOT [BOTTOM]	Q18	I/O Pwr. Drvr.	VIO-RED	J7-P3	BRN	J7-P1	20v DC	23-800 090-5001-00T
#19	TOP LEFT SLINGSHOT	Q19	I/O Pwr. Drvr.	VIO-ORG	J7-P4	BRN	J7-P1	20v DC	23-800 090-5001-00T
#20	TOP RIGHT SLINGSHOT	Q20	I/O Pwr. Drvr.	VIO-YEL	J7-P6	BRN	J7-P1	20v DC	23-800 090-5001-00T
#21	FLASH: LOCK BALL	Q21	I/O Pwr. Drvr.	VIO-GRN	J7-P7	ORG	J6-P10	20v DC	#906 Bulb 165-5004-00
#22	POPS ENTRY POST	Q22	I/O Pwr. Drvr.	VIO-BLU	J7-P8	BRN	J7-P1	20v DC	27-1500 090-5004-00T
#23	BALL LOCK POST	Q23	I/O Pwr. Drvr.	VIO-BLK	J7-P9	BRN	J7-P1	20v DC	27-1500 090-5004-00T
#24	OPTIONAL COIN METER	Q24	I/O Pwr. Drvr.	VIO-GRY	J7-P10	RED	J16-P7	5v DC	Meter 5v 091-5000-00

Diode On Terminal Strip (if noted)

Low Current Coils Group 2		Drive Transistor (D.T.)	Driver Ouput Board	D.T. Control Line Color	D.T. Control Line Connect	Power Line Color	Power Line Connnection	Power Voltage	Bulb Type
#25	LEFT RAMP DIVERTER	Q25	I/O Pwr. Drvr.	BLK-BRN	J6-P1	BRN	J7-P1	20v DC	27-1500 090-5004-00T
#26	STEPPER MOTOR (RED) DOTS	Q26	I/O Pwr. Drvr.	BLK-RED to RED	J6-P2	GRY-RED WHT	J16-P3	20v DC	Step. Mtr. 041-5062-01
#27	STEPPER MOTOR (GREEN) DOTS	Q27	I/O Pwr. Drvr.	BLK-ORG to GRN	J6-P3	GRY-RED WHT	J16-P3	20v DC	Step. Mtr. 041-5062-01
#28	STEPPER MOTOR (BLACK) DOTS	Q28	I/O Pwr. Drvr.	BLK-YEL to BLK	J6-P4	GRY-RED WHT	J16-P3	20v DC	Step. Mtr. 041-5062-01
#29	STEPPER MOTOR (BLUE) DOTS	Q29	I/O Pwr. Drvr.	BLK-GRN to BLU	J6-P5	GRY-RED WHT	J16-P3	20v DC	Step. Mtr. 041-5062-01
#30	FLASH: DIVERTER	Q30	I/O Pwr. Drvr.	BLK-BLU	J6-P6	ORG	J6-P10	20v DC	#906 Bulb 165-5004-00
#31	FLASH: POPS*2	Q31	I/O Pwr. Drvr.	BLK-VIO	J6-P7	ORG	J6-P10	20v DC	#89 Bulb 165-5000-89
#32	FLASH: SLOT MACHINE	Q32	I/O Pwr. Drvr.	BLK-GRY	J6-P8	ORG	J6-P10	20v DC	#906 Bulb 165-5004-00

Note: In Test Flash Lamps Menu ("Flash" Icon), Flashers tested are all Flash Lamps located between Q1-Q32 (This Game: #8, #21 & #30-#32)

Auxilliary (UK ONLY)		Drive Transistor (D.T.)	Driver Ouput Board	D.T. Control Line Color	D.T. Control Line Connect	Power Line Color	Power Line Connnection	Power Voltage	Coil GA-Turn
AUX 1: LEFT UP/DOWN POST		Q1	Sol. Expander (Aux. Board)	WHT	J3-P11	BRN	J7-P1	20v DC	26-1200 090-5044-00T
AUX 2: CENTER UP/DOWN POST		Q2	Sol. Expander (Aux. Board)	RED	J3-P10	BRN	J7-P1	20v DC	23-1100 090-5030-00T
AUX 3: RIGHT UP/DOWN POST		Q3	Sol. Expander (Aux. Board)	ORG	J3-P9	BRN	J7-P1	20v DC	26-1200 090-5044-00T

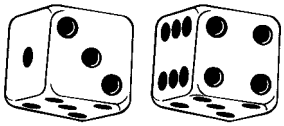

Backbox I/O Power Driver Board Detailed Wiring Diagram

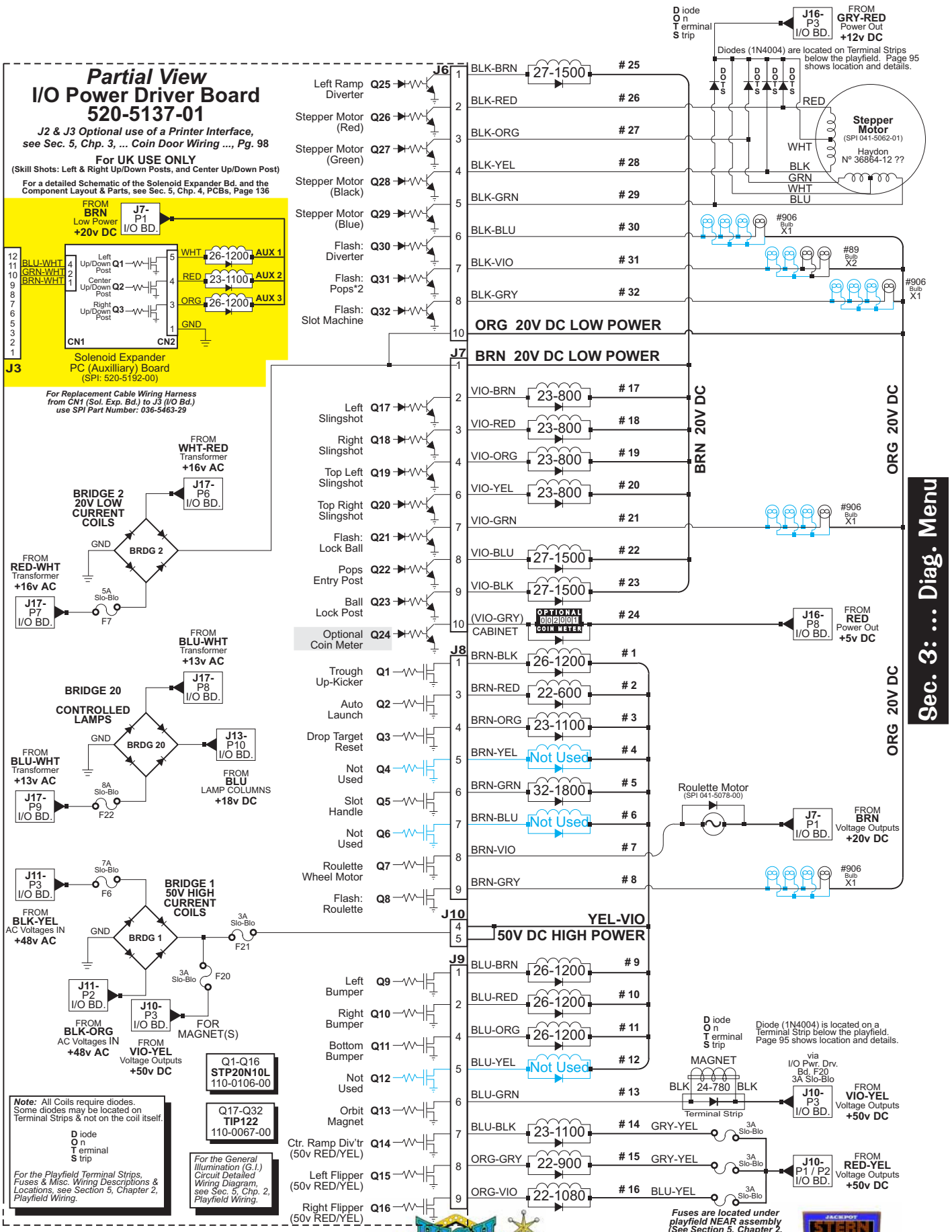

Sec. 3: ... Diag. Menu

Section 3, Chapter 2:
Go To Diagnostics Menu

Go To Lamp Menu

From the **DIAGNOSTICS MENU**, select the "LAMP" *Icon* with either **Red "LEFT"** or **Green "RIGHT" Button** and press the **Black "ENTER" Button**. Controlled lamps are configured in and 8 x 10 Matrix of Columns (Lamp Drives) and Rows (Lamp Returns) with up to 80 lamps possible. The Lamp Test Menu consists of four (4) parts: Single Lamp Test, Test All Lamps, Row Lamp Test and Column Lamp Test.

Single Lamp Test

To initiate, from the **LAMP MENU**, select the "ONE" *Icon* with either **Red** or **Green Button** and press the **Black Button**. Select either the "-" or "+" *Icons*. Start with the "+" *Icon* to start the manual Lamp Test from Column 1, Row 1, Lamp 1. Press the **Black Button** on the "+" *Icon*, as each lamp is selected, the lamp will light at it's location on the playfield as well as the display, indicating the Lamp Matrix Grid Position, lamp name with the corresponding number, Return (Row) Wire & Color, Drive (Column) Wire & Color, and associated drive transistors. Press the **Black Button** again to move forward in the test. To test and view a particular lamp, select the "RUN" *Icon* and press the **Black Button**. Each time the **Black Button** is pushed, the lamp will light-up on the playfield, with the display indicating the lamp information. Continue with the same procedure to run through the entire test.

Test All Lamps

To initiate, from the **LAMP MENU**, select the "ALL" *Icon* with either **Red** or **Green Button** and press the **Black Button**. If still in Single Lamp Test *(or any 1 of the 4 tests)*, select the "PREV" *Icon* to return to Lamp Menu or selecting either of the "ARROW" *Icons* will move through the tests, keep activating until Test All Lamps is displayed. The display will indicate "ALL LAMPS ON" and the lamps on the playfield will be lit, alternating between the rows in the Lamp Matrix Grid.

Row & Column Lamp Tests

To initiate, from the **LAMP MENU**, select the "ROW" or "COL" *Icon* with either **Red "LEFT"** or **Green "RIGHT" Button** and press the **Black Button**. If still in a previous test, select the "PREV" *Icon* to return to Lamp Menu or selecting either of the "ARROW" *Icons* will move through the tests, keep activating until Row or Column Lamp Test (whichever desired) is displayed. In this test, each set of lamps in each Row or Column of the Lamp Matrix Grid (respective to each test) will light-up on the playfield and is indicated in the display.

LAMP MATRIX GRID

Diode On Terminal Strip:

Row (GND) \ Column (18v)	1: U17 YEL-BRN J13-P9	2: U16 YEL-RED J13-P8	3: U15 YEL-ORG J13-P7	4: U14 YEL-BLK J13-P6	5: U13 YEL-GRN J13-P5	6: U12 YEL-BLU J13-P4	7: U11 YEL-VIO J13-P3	8: U10 YEL-GRY J13-P1
1: Q33 RED-BRN J12-P1	WON SLOT MACHINE #555 Bulb 1	WON POKER #555 Bulb 2	WON HI-LO #555 Bulb 3	WON ROULETTE #555 Bulb 4	WON CRAPS #555 Bulb 5	WON BLACKJACK 21 #555 Bulb 6	CASINO FRENZY #555 Bulb 7	CHEAT GAME #555 Bulb 8
2: Q34 RED-BLK J12-P2	(H) ILO [LT. OUTLANE] #555 Bulb 9	H (I) LO [LT. RETURN] #555 Bulb 10	HI (L) O [RT. RETURN] #555 Bulb 11	HIL (O) [RT. RETURN] #555 Bulb 12	LEFT BUMPER #555 Bulb 13	RIGHT BUMPER #555 Bulb 14	BOTTOM BUMPER #555 Bulb 15	BREAK THE BANK #555 Bulb 16
3: Q35 RED-ORG J12-P3	CHIP 1 #555 Bulb 17	CHIP 2 #555 Bulb 18	CHIP 3 #555 Bulb 19	CHIP 4 #555 Bulb 20	CHIP 5 #555 Bulb 21	CHIP 10 #555 Bulb 22	CHIP 25 #555 Bulb 23	CHIP 50 #555 Bulb 24
4: Q36 RED-YEL J12-P4	2 / HEARTS #555 Bulb 25	2 / DIAMONDS #555 Bulb 26	4 / DIAMONDS #555 Bulb 27	A / SPADES #555 Bulb 28	A / DIAMONDS #555 Bulb 29	JOKER #555 Bulb 30	3 / DIAMONDS #555 Bulb 31	ROLL AGAIN #555 Bulb 32
5: Q37 RED-GRN J12-P5	LEFT ORBIT ARROW #555 Bulb 33	PLAY 21 #555 Bulb 34	DOUBLE DOWN #555 Bulb 35	SLOT MACHINE ARROW #555 Bulb 36	SPIN SLOT #555 Bulb 37	LOCK BALL #555 Bulb 38	MULTIBALL #555 Bulb 39	SUPER JACKPOT #555 Bulb 40
6: Q38 RED-BLU J12-P6	RAMP ARROW #555 Bulb 41	PLAY ROULETTE #555 Bulb 42	PLAY ROLL-N-WIN #555 Bulb 43	RIGHT ORBIT ARROW #555 Bulb 44	PLAY HI-LO #555 Bulb 45	PLAY POKER #555 Bulb 46	BACK PANEL LEFT #1 #44 Bulb 47	BACK PANEL #2 #44 Bulb 48
7: Q39 RED-VIO J12-P8	LEFT CHIP #555 Bulb 49	ROLL DICE #555 Bulb 50	LEFT 21 HIT #555 Bulb 51	RIGHT 21 HIT #555 Bulb 52	LIGHT ROLL_N_WIN #555 Bulb 53	RIGHT CHIP #555 Bulb 54	BACK PANEL #3 #44 Bulb 55	BACK PANEL #4 #44 Bulb 56
8: Q40 RED-GRY J12-P9	SPECIAL #555 Bulb 57	EXTRA BALL #555 Bulb 58	BACK PANEL #5 #44 Bulb 59	BACK PANEL #6 #44 Bulb 60	BG SUPER POPS #555 Bulb 61	BG SUPER LOOPS #555 Bulb 62	BG SUPER SURPRISE #555 Bulb 63	BG SUPER SPINNER #555 Bulb 64
9: Q41 RED-WHT J12-P10	BG START (6:00) #555 Bulb 65	BG 3 SLOT SPINS (7:00) #555 Bulb 66	BG ? (8:00) #555 Bulb 67	BG 10 CHIPS (9:00) #555 Bulb 68	BG ROLL AGAIN (10:00) #555 Bulb 69	BG LITE EXTRA BALL (11:00) #555 Bulb 70	BG MULTIBALL (12:00) #555 Bulb 71	BG COLLECT BONUS (1:00) #555 Bulb 72
10: Q42 RED J12-P11	BG CASINO GAME (2:00) #555 Bulb 73	BG 25 MILLION (3:00) #555 Bulb 74	BG BONUS X (4:00) #555 Bulb 75	BG LIGHT SPECIAL (5:00) #555 Bulb 76	BACK PANEL #7 #44 Bulb 77	BACK PANEL LIGHT #8 #44 Bulb 78	BACK PANEL #9 #44 Bulb 79	BACK PANEL RIGHT #10 #44 Bulb 80

Lamp Matrix Grid Locations

The lamp locations correspond with the Lamp Nº in the Lamp Matrix Grid on the previous page.

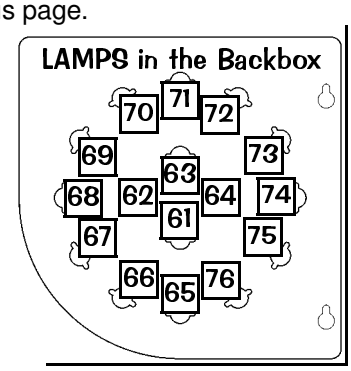

Legend Note:

☐ = Lamps mounted above playfield.

■ = Lamps mounted below playfield.

The following Lamps are not used: **(ALL LAMPS USED)**

The following Bulbs are used in the Lamp Matrix Grid (See Table Grid on previous page for details):

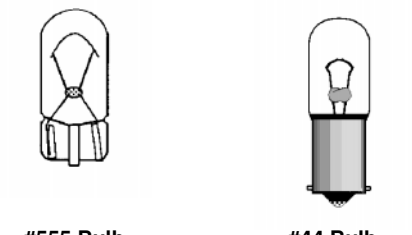

#555 Bulb (Wedge)
165-5002-00

#44 Bulb (Bayonet)
165-5000-44

Typical Lamp Schematic

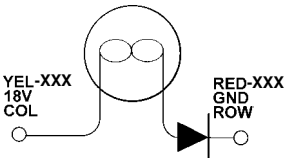

Typical Lamp Wiring

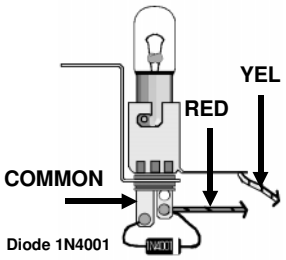

Note:
All Lamps require diodes. Some diodes are located on Terminal Strips (under playfield) and not on the lamp itself. **D**iode **O**n **T**erminal **S**trip

LAMPS in the Back Panel

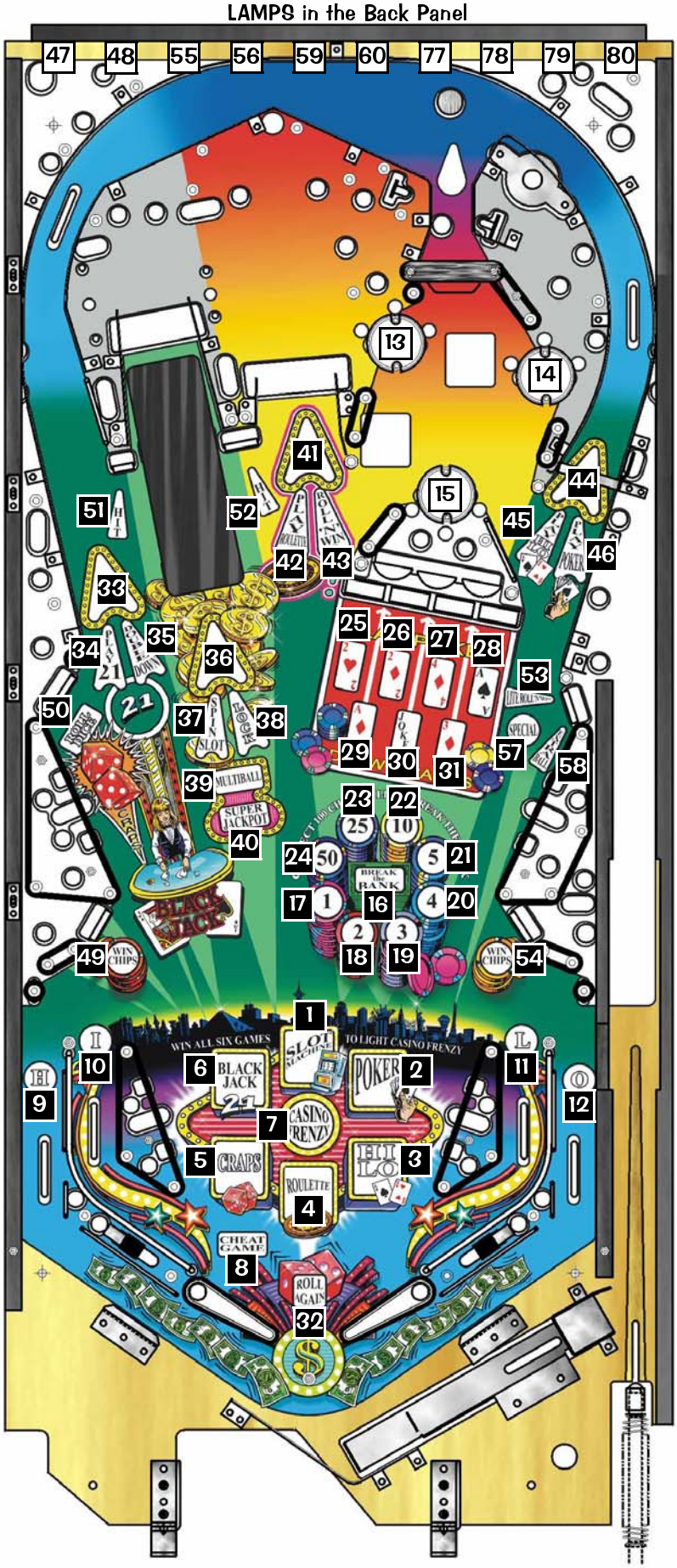

Sec. 3: ... Diag. Menu

Section 3, Chapter 2:
Go To Diagnostics Menu

Test Flash Lamps

From the **DIAGNOSTICS MENU**, select the "FLASH" *Icon* with either **Red "LEFT"** or **Green "RIGHT" Button** and press the **Black "ENTER" Button**. After selecting this *Icon* the display will indicate "CYCLING FLASHERS" and all the Flash Lamps will cycle continuously until the test is exited. This test is allows the technician to easily spot any burned-out bulbs and replace them. Flashers tested are Flash Lamps in Positions: **Q1-Q32** and in this game Flash Lamp(s) are in Position(s): **Q8**, **Q21** & **Q30-Q32**.

Important: The **Power Interlock Switch** must be pulled out for this *test to function* while the **Coin Door** is **OPEN**.

Clear Ball Trough

From the **DIAGNOSTICS MENU**, select the "CLR" *Icon* with either **Red "LEFT"** or **Green "RIGHT" Button** and press the **Black "ENTER" Button**. This is provided to allow the technician a simple method of removing the balls from the trough and also, to test functionality of the trough, ensuring proper trough operation. After selecting this *Icon* the display will show a graphic of the ball trough with balls in the trough with it's corresponding switch number. Select the "RUN" *Icon* to eject the ball in the first position. Simultaneously, the display and the playfield will eject the ball to the Trough Up-Kicker, eject from the Trough Up-Kicker into the Shooter Lane and will be ejected onto the playfield where the technician can easily retrieve the pinball or allow the ball(s) to re-enter the trough to continue Clear Ball Trough Test. ***Important:*** The **Power Interlock Switch** must be pulled out. ⚠ **Caution:** *Continuous use of above test may overheat the Trough Up-Kicker Coil.* ⚠

Technician Alert

From the **DIAGNOSTICS MENU**, select the "TECH" *Icon* with either **Red "LEFT"** or **Green "RIGHT" Button** and press the **Black "ENTER" Button**. After selecting this *Icon* the display will indicate if there are any faulty switches (i.e., switches that are normally closed but remain open or open switches that have not been closed (activated) in 50 games.)

Service Phone

From the **DIAGNOSTICS MENU**, select the "SERV" *Icon* with either **Red "LEFT"** or **Green "RIGHT" Button** and press the **Black "ENTER" Button**. After selecting this *Icon* the display will indicate a phone number to call if technical assistance is required.

Begin Play Test

From the **DIAGNOSTICS MENU**, select the "PLAY" *Icon* with either **Red "LEFT"** or **Green "RIGHT"** Button and press the **Black "ENTER" Button**. After selecting this *Icon* the technician can test certain play functions to insure all switch activated coils function without entering game play. For example, by rolling the ball over the Shooter Lane switch, the Autoplunger should fire. If it kicks to early or too late, the switch actuator should be adjusted to compensate for this error. If it fails to fire, use the Switch Test or Coil Test to help determine the cause of the failure. During this function, similar tests may be performed on the "Ejects", Sling-shots, Vertical Up-Kickers, Pop Bumpers, etc. in the game. For unique Play Test functions, select the "GAME SPECIFIC" *Icon* in the **DIAGNOSTICS MENU**. ***Important:*** The **Power Interlock Switch** must be pulled out.

Fire Knocker

From the **DIAGNOSTICS MENU**, select the "KNOCKER" *Icon* with either **Red "LEFT"** or **Green "RIGHT" Button** and press the **Black "ENTER" Button**. The digitally mastered "Knocker" is sounded.

Sound / Speaker Test

From the **DIAGNOSTICS MENU**, select the "SPKR" *Icon* with either **Red "LEFT"** or **Green "RIGHT" Button** and press the **Black "ENTER" Button**. The BSMT 2000 Sound System produces true digital stereo sound from Backbox & Cabinet Speakers or *"Mono"* on the Cabinet Speaker (when used by itself). After selecting this *Icon*, select the "-" or "+" *Icons* and press the **Black "ENTER" Button** to activate the first test. Repeat to visually see & hear all tests. Select the "RUN" *Icon* to activate the test chosen without moving to the next test.

Note: *During Sound Tests, the display shows the speaker identification and the corresponding sound(s). The sound functions allow verification that both channels are functioning properly & that the speaker connections are correct.*

Sound / Speaker Test Continued Next Page

Speaker Phase Testing

Continued

Connections to each of speakers are polarized and each must be connected appropriately for the best quality sound. If one speaker has the positive and negative connections reversed with respect to the other one, bass frequencies will not be produced properly and the overall sound quality will be poor. To test for proper speaker phasing, use the sound test to cycle through the Backbox & Cabinet, and Backbox Sine (repeated) functions. If the Cabinet Sine produces more volume and bass than the Left Sine, the speakers are connected properly. If it produces the same or less, one speaker is connected improperly. To isolate and correct reversed speaker connections, one of two methods may be used.

1. Check each speaker for polarity markings. If the speakers have polarity markings, verify that the Backbox Speaker RED/WHT Wire and the Cabinet Speaker YEL/WHT Wire is connected to the negative (-) terminal.

2. Disconnect the speaker output connector from the CPU / Sound Board and connect a 1.5-volt battery across each speaker pair one at a time while observing the speakers. Make sure the positive battery terminal is connected to the positive lead (CN4, Pin-3 (RED/BLK) or Pin-6 (YEL/BLK)) each time. As the connection is made, check speaker cone movement; proper connections are indicated by outward movement.

Auto / Manual Tests	Sounds Produced
Speaker Test	**Tone**
Sound/OPSYS EPROM (Loc. U7)	**Level 1-3+ (Music Test)**
Voice ROMs: 1 (U17) 2 (U21) 3 (U36) 4 (U37)	**Speech Pattern 1-3+**

Note: For ROM Locations, see Page* DR. ❶*. For ROM Usage (Summary Table) see Page* DR. ❸ *in the "Find-It-In-Front: Dr. Pinball Section". Voice ROMs (U17, U21, U36 & U37) which are 8MB must have a Jumper at W6 on the CPU/Sound Board to function properly.

Begin Burn In

From the **DIAGNOSTICS MENU**, select the "BURN" *Icon* with either **Red "LEFT"** or **Green "RIGHT" Button** and press the **Black "ENTER" Button**. After selecting this *Icon* the Begin Burn-In Test will start. At this stage the game will exercise all CPU I/O Functions (Dot Matrix Display Test, Coil Testing, Lamp Testing, Sound, etc.). This is provided to constantly exercise sounds, coils, etc... Cumulative Burn-In minutes will be displayed. To reset Burn-In minutes to 00, select the "RESET" *Icon* in the **MAIN MENU** and select the "FACT" *Icon* (Factory Reset). See Chapter 5, Go To Reset Menu, of this section.

Dot Matrix Test

From the **DIAGNOSTICS MENU**, select the "DOT TEST" *Icon* with either **Red "LEFT"** or **Green "RIGHT" Button** and press the **Black "ENTER" Button**. After selecting this *Icon* the Dot Matrix Test immediately begins. The display will immediately illuminate & cycle for 1 pass of each test continuously for each of the following tests:

1. Illuminates 1 vertical column of dots, turning it off & illuminating the next column, until each column has been individually lit, while the other columns are off.
2. Illuminates 1 horizontal row of dots, turning it off & illuminating the next row, until each row has been individually lit, while the other rows are off.
3. Illuminates all the dots, except for one column from left to right.
4. Illuminates all the dots, except for one row from top to bottom.
5. Illuminates every other dot lit, in both the rows and columns.
6. Illuminates all dots at 30%, 70% & 100% brightness.

Note: Pressing any button will exit the test & return to **DIAGNOSTICS MENU**.

Dot Matrix Display Explained

The display utilizes a Micro-Processor Control Board mounted in piggyback fashion to the Dot Matrix Display (128 X 32) Driver Board. The purpose behind this board is to provide more information to the operator as well as displaying graphics to the player.

The board is controlled by a 6809E Microprocessor and its personality ROM (Unique to the Game). It receives Data, Reset & Clock Information from the CPU/Sound Board via the ribbon cable and sends back multiple Status and Busy Signals to the CPU. This is to insure synchronized communication between the CPU and the Display Controller Board. The Drivers for the rows and columns are provided on 5 surface mounted integrated circuits on the Dot Matrix Display Driver Board.

Casino Specific (Slot Display, Roulette OPTO & Stepper Motor Tests)

To initiate, from the **DIAGNOSTICS MENU**, select the "HRC" *Icon* with either the **Red "LEFT"** or **Green "RIGHT" Button** (the **LEFT** & **RIGHT FLIPPER Buttons** operates in the same manner) and press the **Black "ENTER" Button** (the **START Button** operates in the same manner).

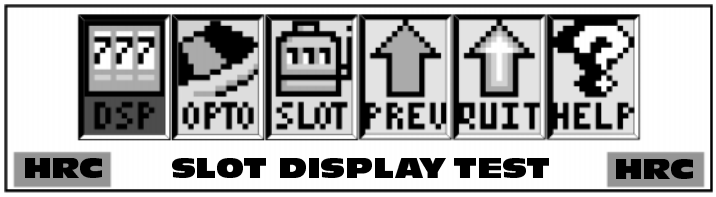

This will bring up the **CASINO SPECIFIC MENU**. This Sub-Menu is used to test the Operation of the **Display in the Slot Machine** ("DSP" *Icon*), the **OPTOs in the Roulette Wheel** ("OPTO" *Icon*) and the **Stepper Motor in the Slot Machine Entrance Ramp** ("SLOT" *Icon*). To initiate, from the **CASINO SPECIFIC MENU**, select one of the 3 *Icons* with either the **Red "LEFT"** or **Green "RIGHT" Button** (the **LEFT** and **RIGHT FLIPPER Buttons** operates in the same manner) and press the **Black "ENTER" Button** (the **START Button** operates in the same manner).

After finishing the Test select the "PREV" *Icon* to return to the Sub-Menu or select either of the ">>" *Icon* to slip between the 3 Testing Menus.

Important: The **Power Interlock Switch** must be pulled out for the motors function while the **Coin Door** is **OPEN**.

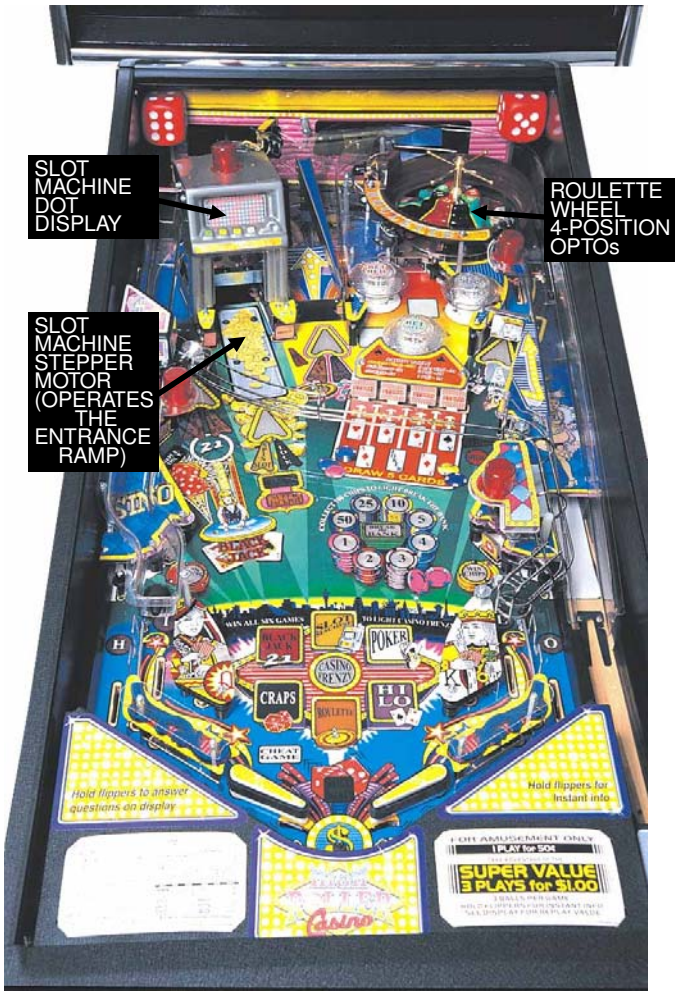

Slot Display Test

Selecting this *Icon* will bring up the **SLOT DISPLAY TEST MENU**. This test is provided to allow the technician a simple method of testing the ***DOTS*** in the **Display for the Slot Machine**. The Menu appears blank as well as the Display in the Slot Machine. Upon entering this sub-menu the "+" *Icon* is blinking. Select the "-" or "+" *Icon* to begin the tests. The tests are as follows: **VERTICAL LINE**, **HORIZONTAL LINE**, **ALL ON**, **ALL OFF**, **REVERSE VERTICAL LINE** & **REVERSE HORIZONTAL LINE**. As the line tests are cycled through watch the Dot Display in the Slot Machine to ensure all are functioning properly.

Roulette OPTO Test

Selecting this *Icon* will bring up the **ROULETTE OPTO TEST MENU**. This test is provided to allow the technician a simple method of testing the **OPTO Switches**, ☐ **- OP2 RIGHT (Sw. 41)**, ☐ **- OP1 TOP (SW. 42)**, ☐ **- OP3 LEFT (SW. 43)** and ☐ **- OP4 BOTTOM (SW. 44)**. Upon entering this test menu, the display will indicate the switch status of the ***Roulette Wheel***. Select the "PULSE" *Icon* to pulse the motor (in steps). If the Roulette Wheel is at **OP2 Right** the motor will turn to the ☐ **- OP3 LEFT (SW. 43)** position *(**OP3** on the OPTO Bd.)*. Continuously activating the "PULSE" *Icon* will bring the Roulette Wheel back into the ☐ **- OP2 RIGHT (SW. 41)** position *(**OP2** on the OPTO Bd.)*, etc. Selecting the "RUN" *Icon* will automatically cycle the motor to the next open switch (OPTO) and then will stop. Select the "RUN" *Icon* again to return (cycle) to the other positions. Watch the *Dot Matrix Display* to ensure the **Switches 41 (OP2)**, **42 (OP1)**, **43 (OP3)** & **44 (OP4)** are being indicated as closed as the motor stops (☐ will turn solid ■). Also shown in the Display will be the Value on the Wheel as it turns (when the OPTO Switches are closed). ***Note:*** *These OPTO Switches close when the Motor Cam Flag Bracket passes between the OPTOs.*

Stepper Motor Test

Selecting this *Icon* will bring up the **STEPPER MOTOR TEST MENU**. This test is provided to allow the technician a simple method of testing the **Slot Machine Entrance Ramp Home Micro Switches**, ☐ **- LEFT (Sw. 52)** and ☐ **- RIGHT (SW. 38)**. Upon entering this test menu, the display will indicate the switch status of the ***Slot Machine Entrance Ramp***. Select the "PULSE" *Icon* to pulse the motor (in steps). Selecting the "RUN" *Icon* will automatically cycle the motor to the next level (mid-way) and then will stop. Select the "RUN" *Icon* again to bring the ramp all the way up. Watch the *Dot Matrix Display* to ensure the **Switches 52** & **38** are being indicated as closed as the motor stops in the down position (☐ will turn solid ■). Select "RUN" or "PULSE" until the ramp returns to the down position closing both switches (These switches located below the playfield.).

For more details on the PC Boards which are tested on this page, see Sec. 5, Chp. 4, Pages 130 through 135.

Section 3, Chapter 2:
Go To Diagnostics Menu

Dr. Pinball (Flow Chart Menus)

To initiate, from the **DIAGNOSTICS MENU**, select the Cross "DR." *Icon* with either the **Red "LEFT"** or **Green "RIGHT" Button** and press the **Black "ENTER" Button**. This will bring you (the operator / technician) into **DR. PINBALL** (Flow Chart Menus) which offers you a choice of three sub-menus: Coil "DR.," Switch "DR." and Lamp "DR." *Icons.* Selecting a particular sub-menu will give you a choice of which specific Coil (any and all coil assemblies such as Flippers, VUKs, Magnets, etc.), Switch or Lamp circuit needs to be diagnosed. The display will now ask a question or give a procedure to follow such as "Does the lamp turn on?" or "Check bridge rectifier BR-20, if short replace." When Dr. Pinball asks a question or request a procedure the Dr. will expect a response such as "NO" or "YES" (see below examples of the *Mini-Icons* which will prompt the operator). You the operator/technician must respond by using your **Flipper Buttons** to "SELECT" a *Mini-Icon* and the **Start Button** to "ENTER" your selection.

The following are the *Mini-Icons* with explanations for the Dr. Pinball Sub-Menus to follow:

→ Select a Coil, Lamp or Switch to diagnose with "-" or "+" *Icon*; Then select the "RUN" *Icon* to activate the choice.
"PREV" goes back to previous question.
"QUIT" exits Portals completely.
Help "?" gives direction on button usage.

→ Seen when a question is being asked on the Display. Select "YES" or "NO" to answer the question given.
"END" lets you select a new item to test.
"PREV", "QUIT" and "?" (see first example above).

→ Seen when diagnosis is given. Select any *Icon* for your next step.
"END" lets you select a new item to test.
"PREV", "QUIT" and "?" (see first example above).

→ In Coil Flow Chart Menu, select "PULSE" to pulse the coil selected.
"END" lets you select a new item to test.
"PREV", "QUIT" and "?" (see first example above).

Coil Flow Chart

To initiate, from the **DR. PINBALL MENU**, select the Coil "DR." *Icon* with either the **Red** or **Green Button** and press the **Black Button**. This is the Coil Flow Chart. Follow the questions, answering by using the *Mini-Icons* in the display.

Switch Flow Chart

To initiate, from the **DR. PINBALL MENU**, select the Switch "DR." *Icon* with either the **Red** or **Green Button** and press the **Black Button**. This is the Switch Flow Chart. Follow the questions, answering by using the *Mini-Icons* in the display.

Lamp Flow Chart

To initiate, from the **DR. PINBALL MENU**, select the Lamp "DR." *Icon* with either the **Red** or **Green Button** and press the **Black Button**. This is the Lamp Flow Chart. Follow the questions, answering by using the *Mini-Icons* in the display.

Game Audit Table for High Roller Casino Pinball

STERN PINBALL, INC.

Copy for Field Audit Tracking Performance (Use blank columns to fill-in Audit Info.).

Earnings Audits 1-12

	Audit Name	Fill-In		Audit Name	Fill-In		Audit Name	Fill-In
1	TOTAL PAID CREDITS		5	COINS THRU LEFT SLOT		9	TOTAL COINS	
2	FREE GAME PERCENTAGE		6	COINS THRU RIGHT SLOT		10	TOTAL EARNINGS	
3	AVERAGE BALL TIME		7	COINS THRU CENTER SLOT		11	METER CLICKS	
4	AVERAGE GAME TIME		8	COINS THRU 4TH SLOT		12	SOFTWARE METER	

S.P.I. Audits 13-55

	Audit Name	Fill-In		Audit Name	Fill-In		Audit Name	Fill-In
13	TOTAL BALLS PLAYED		28	20M—49.9M SCORES		43		
14	TOTAL EXTRA BALLS		29	50M—69.9M SCORES		44		
15	EXTRA BALL PERCENT		30	70M—99.9M SCORES		45		
16	REPLAY 1 AWARDS		31	100M—129.9M SCORES		46		
17	REPLAY 2+ AWARDS		32	130M+ SCORES		47		
18	TOTAL REPLAYS		33	AVERAGE SCORES		48		
19	REPLAY PERCENT		34	SERVICE CREDITS		49		
20	TOTAL SPECIALS		35	BALL SEARCH STARTED		50		
21	SPECIAL PERCENT		36	LOST BALL FEEDS		51		
22	TOTAL MATCHES		37	LOST BALL GAME STARTS		52	LEFT FLIPPER USED	
23	HIGH SCORE AWARDS		38	LEFT DRAINS		53	RIGHT FLIPPER USED	
24	HIGH SCORE PERCENT		39	CENTER DRAINS		54	USA 8 BONUS USED	
25	TOTAL FREE PLAYS		40	RIGHT DRAINS		55		
26	TOTAL PLAYS		41	SLAM TILTS				
27	0—19.9M SCORES		42	TOTAL BALLS SAVED				

High Roller Casino Audits 56-203 Programming Use Only

	Fill-In		Fill-In		Fill-In		Fill-In		Fill-In		Fill-In		Fill-In		Fill-In		Fill-In
56		73		90		107		124		141		158		175		192	
57		74		91		108		125		142		159		176		193	
58		75		92		109		126		143		160		177		194	
59		76		93		110		127		144		161		178		195	
60		77		94		111		128		145		162		179		196	
61		78		95		112		129		146		163		180		197	
62		79		96		113		130		147		164		181		198	
63		80		97		114		131		148		165		182		199	
64		81		98		115		132		149		166		183		200	
65		82		99		116		133		150		167		184		201	
66		83		100		117		134		151		168		185		202	
67		84		101		118		135		152		169		186		203	
68		85		102		119		136		153		170		187			
69		86		103		120		137		154		171		188		CPU Ver.:	
70		87		104		121		138		155		172		189			
71		88		105		122		139		156		173		190		Display Ver.:	
72		89		106		123		140		157		174		191			

Location: Date:

Section 3, Chapter 3:
Go To Audits Menu

Go To Audits Menu

Overview

The **Portals™ Service Menu System** provides 203 Audit Functions for accounting purposes and for evaluation of *Game Difficulty Adjustments*. The Audit Functions are divided into 3 groups: • **Earnings (Coin) Audits**, are the first 12 most-used Audits • **S.P.I. Audits**, are the Game Play Generic Audits 13-55 • **High Roller Casino Audits**, are the Game Play Specific Audits 56-203 (**//// Programming Use Only ////**); Audits left open (blank space *in gray*, e.g. Audits 43-51, 54 & 55) are currently ***Not Used,*** allowing for ***Future Expansion,*** if any, or are ***Proprietary***. If the code version is upgraded, view Audits in the display & write the audit(s) in the blank(s) if any audit(s) were added. Each group may be viewed in the **Portals™ Service Menu** (see Chapter 1, **Portals™ Service Menu Introduction**, of this Section). View all audits with the **Game Audit Table** provided on the previous page.

GO TO AUDITS MENU

With the game in the Attract Mode, open the Coin Door and press the **Black "BEGIN TEST" Button**. Select the "AUD" *Icon* in the **MAIN MENU** with either **Red "LEFT"** or **Green "RIGHT" Button** and press the **Black "ENTER" Button**. The **AUDITS MENU** appears.

Important Notes:

Exit any sub-menu and return to the **MAIN MENU** by selecting & activating the "PREV" *Icons*. If no *Icons* appear in the display because of a testing function or special display (e.g. "Help"), press any button to exit.

Selecting & activating the "QUIT" *Icon* from any display will exit the Service Session.

Selecting & activating the "HELP" *Icon* from any display will show a help screen. (An explanation of each *Mini-Icon* at that level will cycle continuously until any active button is pressed.)

Selecting & activating the "ARROW" *Icons* selects the next or previous audit in the group.

Earnings Audits (1-12)

From the **AUDITS MENU**, select the "EARN" *Icon* with either **Red "LEFT"** or **Green "RIGHT" Button** and press the **Black "ENTER" Button**. Select and activate the "RIGHT ARROW" *Icon* to view the 1st audit in this group. Continue to select either of the "ARROW" *Icons* to view each audit one at a time. The display will describe the audit number, the audit name, and the audit total or value. The current audit will remain in the display until the next audit is chosen or when the sub-menu is exited.

Au. Nº	Audit Name	Audit Definition
Au. 1	**TOTAL PAID CREDITS**	Provides the total number of paid credits.
Au. 2	**FREE GAME PERCENTAGE**	This percentage is derived from dividing Audit 25, Total Free Plays, by Audit 26, Total Plays.
Au. 3	**AVERAGE BALL TIME**	In seconds, the average ball time is derived from the total play time divided by Audit 13, Total Balls Played.
Au. 4	**AVERAGE GAME TIME**	The average game time is expressed in minutes and seconds.
Au. 5	**COINS THRU LEFT SLOT**	Provides the total number of times Coin Switch (Sw. 6) was closed.
Au. 6	**COINS THRU RIGHT SLOT**	Provides the total number of times Coin Switch (Sw. 4) was closed.
Au. 7	**COINS THRU CENTER SLOT**	Provides the total number of times Coin Switch (Sw. 5) was closed.
Au. 8	**COINS THRU 4TH SLOT**	Provides the total number of times Coin Switch (Sw. 2) was closed.
Au. 9	**TOTAL COINS**	Provides the total amount of coins registered through all the slots.
Au. 10	**TOTAL EARNINGS**	The total cash value accumulated since the last *Factory Restore* occurred (see Chapter 5, Go to Reset Menu, of this section).
Au. 11	**METER CLICKS**	Provides the total number of money clicks accumulated. (Based on the country's lowest coin denomination used for the game credit.)
Au. 12	**SOFTWARE METER**	Provides the continuing total of Meter Clicks. This audit cannot be reset; the display shows the constant addition of Meter Clicks.

S.P.I. Audits (13-55)

From the **AUDITS MENU**, select the "S.P.I." *Icon* with either **Red "LEFT"** or **Green "RIGHT" Button** and press the **Black "ENTER" Button**. Select and activate the "RIGHT ARROW" *Icon* to view the 1st audit in this group. Continue to select either of the "ARROW" *Icons* to view each audit one at a time. The display will describe the audit number, the audit name, and the audit total or value. The current audit will remain in the display until the next audit is chosen or when the sub-menu is exited.

Au. Nº	Audit Name	Audit Definition
Au. 13	**TOTAL BALLS PLAYED**	Provides the total number of regular and extra balls.
Au. 14	**TOTAL EXTRA BALLS**	Provides the total number of extra balls awarded.
Au. 15	**EXTRA BALLS PERCENT**	Provides the percentage total from dividing Audit 14, Total Extra Balls, by Audit 26, Total Plays.
Au. 16	**REPLAY 1 AWARDS**	Provides the total awards (Credit, Extra Ball, Or Audit) for level 1.
Au. 17	**REPLAY 2+ AWARDS**	Provides the total awards (Credit, Extra Ball, Or Audit) for level(s) 2 or higher.
Au. 18	**TOTAL REPLAYS**	Provides the total awards (Credits, Extra Balls, Or Audit Only) for exceeding replay score levels.
Au. 19	**REPLAY PERCENT**	Provides the percentage total from dividing Audit 18, Total Replays, by Audit 26, Total Plays. The percentage reflects replay total awards for exceeding replay score levels.
Au. 20	**TOTAL SPECIALS**	Provides the total awards (Credits, Extra Balls, Or Scores) for making specials.
Au. 21	**SPECIAL PERCENT**	This percentage is derived from dividing Audit 20, Total Specials, by Audit 26, Total Plays.
Au. 22	**TOTAL MATCHES**	Provides the total credits awarded for matching the last two digits of the score with the system-generated Match Number at the end of the game. Percentage of match credits is adjustable from 0% to 10% by Adjustment 11, Match Percentage, if enabled. (See Chapter 4, Go to Adjustments Menu, of this section.)
Au. 23	**HIGH SCORE AWARDS**	Provides the total credits awarded for exceeding the High-Score-To-Date scores.
Au. 24	**HIGH SCORE PERCENT**	This percentage is derived from dividing Audit 23, High Score Awards, by Audit 26, Total Plays.
Au. 25	**TOTAL FREE PLAYS**	Provides the total free credits for replays, High-Score-To-Date, Specials, and Match.
Au. 26	**TOTAL PLAYS**	This total is derived by adding the sum of Audit 1, Total Paid Credits, and Audit 25, Total Free Plays. Note that free credits are not recorded in the Audit until they are actually used.
Au. 27	**0—19.9M SCORES**	Provides the total number of games the Player's final score was between 0 and 19,900,000 points.
Au. 28	**20M—49.9M SCORES**	Provides the total number of games the Player's final score was between 20,000,000 and 49,900,000 points.
Au. 29	**50M—69.9M SCORES**	Provides the total number of games the Player's final score was between 50,000,000 and 69,900,000 points.
Au. 30	**70M—99.9M SCORES**	Provides the total number of games the Player's final score was between 70,000,000 and 99,900,000 points.
Au. 31	**100M—129.9M SCORES**	Provides the total number of games the Player's final score was between 100,000,000 and 129,900,000 points.
Au. 32	**130M+ SCORES**	Provides the total number of games the Player's final score was over 130,000,000 points.
Au. 33	**AVERAGE SCORES**	This total is derived from adding the Final Score of each game to a table and dividing this sum by Audit 26, Total Plays.
Au. 34	**SERVICE CREDITS**	Provides the total number of times Dedicated Switch (DS-7) was closed, not in the Portals™ Service Menu. (See Chapter 1, Introduction [*Access & Use*] for instructions on how to receive Service Credits.)
Au. 35	**BALL SEARCH STARTED**	Provides the total number of times the game performed a ball search.
Au. 36	**LOST BALL FEEDS**	Provides the total number of times the game added a ball to play when it could not find a ball after ball search.

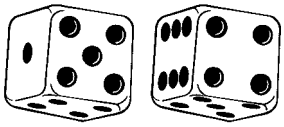

	Audit Name	Audit Definition
Au. 37	LOST BALL GAME STARTS	Provides the total number of times the game started with a ball missing from the ball trough at the start of a game.
Au. 38	LEFT DRAINS	Provides the total number of times Rollover Switch 57 was closed.
Au. 39	CENTER DRAINS	Provides the total number of times the game ball had drained with the last switch closed was not Sw. 57 or Sw. 60.
Au. 40	RIGHT DRAINS	Provides the total number of times Rollover Switch 60 was closed.
Au. 41	SLAM TILTS	Provides the total number of times Contact Switch 55 was closed.
Au. 42	TOTAL BALLS SAVED	Provides the total number of times this feature was used. This feature is enabled at the start of each ball and is disabled as soon as the ball makes contact with 5 game switches or allocated time expired.
Au. 43-Au. 51		These audits are ***Not Used***, allowing for ***Future Expansion***, if any, and/or ***Proprietary*** (used for programming).
Au. 52	LEFT FLIPPER USED	Provides the total number of times Dedicated Sw. (DS-1) was closed.
Au. 53	RIGHT FLIPPER USED	Provides the total number of times Dedicated Sw. (DS-3) was closed.
Au. 54-Au. 55		These audits are ***Not Used***, allowing for ***Future Expansion***, if any, and/or ***Proprietary*** (used for programming).

High Roller Casino Audits (56-203)

Programming Use Only

From the **AUDITS MENU**, select the "HRC" *Icon* with either **Red "LEFT"** or **Green "RIGHT" Button** and press the **Black "ENTER" Button**. Select and activate the "RIGHT ARROW" *Icon* to view the 1st audit in this group. Continue to select either of the "ARROW" *Icons* to view each audit one at a time. The display will describe the audit number, the audit name, and the audit total or value. The current audit will remain in the display until the next audit is chosen or when the sub-menu is exited. These Game Specific Audits are primarily used for programming. They provide the total number of times a feature was started, awarded, lit, played and/or completed. They also may indicate the total number of Switch Closures during certain modes or features. Multiple variations of switch closures (see Diagnostics) are used to determine the lighting and/or completion of the feature stated.

Au. Nº	Audit Name	Au. Nº	Audit Name
Au. 56	LEFT ORBITS	Au. 77	GREEN SKILL SHOTS MADE
Au. 57	RIGHT ORBITS	Au. 78	RED SKILL SHOTS MADE
Au. 58	LEFT RETURN LANE MADE	Au. 79	BLACK SKILL SHOTS MADE
Au. 59	RIGHT RETURN LANE MADE	Au. 80	SKILL SHOT BALKS
Au. 60	LEFT CHIP TARGET HIT	Au. 81	JET POST ARRIVALS
Au. 61	RIGHT CHIP TARGET HIT	Au. 82	POP BUMPER HITS
Au. 62	L CHIP TARG HIT, BLINK	Au. 83	DOUBLE POP BUMPER HITS
Au. 63	T CHIP TARG HIT, BLINK	Au. 84	ROULETTE SPINS
Au. 64	3 BALL LOCKUP ARRIVALS	Au. 85	ROULETTE LIT
Au. 65	CHIP COMBOS	Au. 86	ROULETTE LOST
Au. 66	4-WAY SLINGSHOT COMBOS	Au. 87	ROULETTE WON
Au. 67	CRAP TARGET HITS	Au. 88	SLOT BASHED
Au. 68	LEFT HITME TARGET HITS	Au. 89	SLOT SPINS
Au. 69	R. HIT-ME TARGET HITS	Au. 90	SLOT LOST
Au. 70	MIDDLE RAMPS MADE	Au. 91	SLOT WON
Au. 71	SLOT RAMPS MADE	Au. 92	1 PAIR POKER HANDS
Au. 72	X4 DROP TARGETS HIT	Au. 93	2 PAIR POKER HANDS
Au. 73	X3 DROP TARG SU HIT	Au. 94	3/KIND POKER HANDS
Au. 74	UPPER RIGHT S.U. HITS	Au. 95	STRAIGHT POKER HANDS
Au. 75	SPINNER SPINS	Au. 96	FULL HOUSE POKER HANDS
Au. 76	BONUS X FROM SPINNER	Au. 97	STRT FLUSH POKER HANDS

Audit Name		Au. №	Audit Name
Au. 98	POKER LOST	Au. 146	SUPER DUPER JACKPOTS
Au. 99	POKER WON	Au. 147	S DUPER MEGA JACKPOTS
Au. 100	HILO COMPLETE	Au. 148	SDMEXTREME JACKPOTS
Au. 101	HILO WON AFTER 1 CARD	Au. 149	WON AT LEAST 2 GAMES
Au. 102	HILO LOST AFTER 1 CARD	Au. 150	WON AT LEAST 4 GAMES
Au. 103	HILO WON AFTER 2 CARDS	Au. 151	WON AT LEAST 6 GAMES
Au. 104	HILO LOST AFTER 2 CRDS	Au. 152	# OF GAMES ABOVE 6 WON
Au. 105	HILO WON AFTER 3 CARDS	Au. 153	CASINO FRENZY LIT
Au. 106	HILO LOST AFTER 3 CRDS	Au. 154	CASINO FRENZY STARTS
Au. 107	HILO WON AFTER 4 CARDS	Au. 155	2+ CASINO FRENZY START
Au. 108	HILO LOST AFTER 4 CRDS	Au. 156	CF CRAPS JACKPOT LIT
Au. 109	CRAPS COMEOUT WINS	Au. 157	CF CRAPS JACKPOTS
Au. 110	CRAPS COMEOUT LOSSES	Au. 158	CF 21 JACKPOT LIT
Au. 111	CRAPS POINTS SET	Au. 159	CF 21 JACKPOTS
Au. 112	CRAPS PT. ROLL NOTHING	Au. 160	CF SLOT JACKPOT LIT
Au. 113	CRAPS POINT ROLL WINS	Au. 161	CF SLOT JACKPOTS
Au. 114	CRAPS PT. ROLL LOSSES	Au. 162	CF ROULETTE JACKPOT LT
Au. 115	21 HITS (CARDS DRAWN)	Au. 163	CF ROULETTE JACKPOTS
Au. 116	21 BUSTS	Au. 164	CF POKER JACKPOT LIT
Au. 117	PLAY 21 LIT	Au. 165	CF POKER JACKPOTS
Au. 118	DOUBLE DOWN LIT	Au. 166	CF HILO JACKPOT LIT
Au. 119	21 LOST	Au. 167	CF HILO JACKPOTS
Au. 120	21 WON	Au. 168	CF SUPER JACKPOT LIT
Au. 121	DOUBLE DOWN LOST	Au. 169	CF SUPER JACKPOTS
Au. 122	DOUBLE DOWN WON	Au. 170	TOTAL CHIPS WON
Au. 123	ROLL-N-WIN COLLECTED	Au. 171	TOTAL CHIPS LOST
Au. 124	LT ROLL-N-WIN TAR HITS	Au. 172	WON AT LEAST 25 CHIPS
Au. 125	ROLL-N-WIN LIT	Au. 173	WON AT LEAST 50 CHIPS
Au. 126	ROLL-N-WIN LAPS MADE	Au. 174	WON AT LEAST 75 CHIPS
Au. 127	SUPER POPS AWARDED	Au. 175	WON AT LEAST 100 CHIPS
Au. 128	SUPER LOOPS AWARDED	Au. 176	WON AT LEAST 200 CHIPS
Au. 129	SUPER SPINNER AWARDED	Au. 177	BREAK THE BANK LIT
Au. 130	SUPER SURPRISE AWARDED	Au. 178	BREAK THE BANK STARTS
Au. 131	FIRST BALL LOCKED	Au. 179	2+ BRK THE BANK STARTS
Au. 132	SECOND BALL LOCKED	Au. 180	BRK THE BANK JACKPOTS
Au. 133	SLOT MACHINE MB STARTS	Au. 181	BRK THE BANK SUPER JP
Au. 134	2+ SLOT MACH MB STARTS	Au. 182	BTB SUPER JP RECOLLECT
Au. 135	SMMB JACKPOTS	Au. 183	BTB SUPER JP COMPLETED
Au. 136	SMMB DOUBLE JACKPOTS	Au. 184	LEFT ORBIT ATM BONUS
Au. 137	L ORBIT TRIPLE JACKPOT	Au. 185	RIGHT ORBIT ATM BONUS
Au. 138	SM TRIPLE JACKPOT	Au. 186	ATM BONUS 2X COLLECTED
Au. 139	M RAMP TRIPLE JACKPOT	Au. 187	ATM BONUS 3X COLLECTED
Au. 140	R ORBIT TRIPLE JACKPOT	Au. 188	ATM BONUS 5X COLLECTED
Au. 141	SUPER JACKPOT LIT	Au. 189	ATM BONUS 7X COLLECTED
Au. 142	S DUPER JACKPOT LIT	Au. 190	ATM BONUS 10X COLLECTED
Au. 143	S D MEGA JACKPOT LIT	Au. 191	CHIPS WON FROM 21
Au. 144	SDMEXTREME JACKPOT LIT	Au. 192	CHIPS LOST FROM 21
Au. 145	SUPER JACKPOTS	Au. 193	CHIPS WON FROM SLOT

Audit Name	Au. Nº	Audit Name
Au. 194 CHIPS LOST FROM SLOT	Au. 199	ROULETTE CHIPS WON
Au. 195 CHIPS WON FROM POKER	Au. 200	ROULETTE CHIPS LOST
Au. 196 CHIPS LOST FROM POKER	Au. 201	CHIPS WON FROM CRAPS
Au. 197 CHIPS WON FROM HILO	Au. 202	CHIPS LOST FROM CRAPS
Au. 198 CHIPS LOST FROM HILO	Au. 203	BONUS X MAXED AWARDS

Go To Printer Menu

From the **AUDITS MENU**, select the "PRNT" *Icon* with either **Red "LEFT"** or **Green "RIGHT" Button** and press the **Black "ENTER" Button**. The **PRINTER MENU** appears.

☞ Special equipment is required for this Sub-Menu

The **Portals™ Service Menu System** provides 3 Audit Printing Adjustment Functions to print information on a "Hand-Held" printer, download game information to a Laptop PC or clear the printout count. A printer interface board, hand-held printer and/or a special software program is required to run this menu. Entering this menu and selection/activation of the *Icons* without this equipment/software will not affect the game.

Quick Printout (Printer Interface)

From the **PRINTER MENU**, select the "QUIK" *Icon* with either **Red** or **Green Button** and press the **Black Button**. Select the "+" *Icon* and press the **Black Button** to start the printout. Only the Earnings Audits can be printed out to a "Hand-Held" Printer.

Full Printout (Alison Interface Program)

From the **PRINTER MENU**, select the "ALISON" *Icon* with either **Red** or **Green Button** and press the **Black Button**. Select the "+" *Icon* and press the **Black Button** to start the download. A special software program & a Lap Top PC is required. All game audits (Earnings, S.P.I. & Game Specific) can be retrieved.

Reset Printer (Nº of Copies Printed Reset)

From the **PRINTER MENU**, select the "RESET" *Icon* with either **Red** or **Green Button** and press the **Black Button**. Select the "+" *Icon* and press the **Black Button** to start the clear the "Nº of copies printed" count total.

RESETTING AUDIT NOTES:

Audit Note: 1st Way to Reset Audits

To reset audits, from the **MAIN MENU**, select the "ADJ" *Icon*. See Chapter 4, Go to Adjustments Menu, of this section.

Select the "S.P.I." *Icon*, from the **ADJUSTMENT MENU**, and advance to Adj. 8, Reset Coin Audits, with the "RIGHT ARROW" *Icon*. Select the "+" *Icon* to change setting to **YES**. When enabled, the *Coin Audits* (5-11) will be reset to zero. Advance to Adj. 9, Reset Game Audits, with the "RIGHT ARROW" *Icon*. Select the "+" *Icon* to change setting to **YES**. When enabled, *all the audits* will be reset to zero, **except** for the *Coin Audits* (5-11) ***and*** Audit 12, Software Meter (the only audit which cannot be reset to zero).

Audit Note: 2nd Way to Reset Audits

To reset audits, from the **MAIN MENU**, select the "RESET" *Icon*. See Chapter 5, Go to Reset Menu, of this section.

Selection of the "COIN" *Icon*, from the **RESET MENU**, will reset the *Coin Audits* (5-11) to zero.

Selection of the "AUD" *Icon*, from the **RESET MENU**, will reset all audits to zero, **except** for the *Coin Audits* (5-11) ***and*** Audit 12, Software Meter (the only audit which cannot be reset to zero).

Game Adjustment Table for High Roller Casino Pinball

STERN PINBALL, INC.

Some adjustments have a "Drop-Down" Table for further customization.

S.P.I. Adjustments 1-42

	Adjustment Name	USA Default	Your Setting		Adjustment Name	USA Default	Your Setting
1	REPLAYS: FIXED/AUTO ‡	...10%...		22	DEFAULT HIGH SCORE #2	400,000,000	
2	REPLAY LEVELS ‡	1 ...		23	DEFAULT HIGH SCORE #3	350,000,000	
3	REPLAY AWARD	CREDIT		24	DEFAULT HIGH SCORE #4	325,000,000	
4	FREE GAME LIMIT	05		25	DEFAULT HIGH SCORE #5	300,000,000	
5	EXTRA BALL LIMIT	03		26	HSTD RESET COUNT	2,000	
6	GAME DIFFICULTY ‡	MODERATE		27	HIGH SCORE INITIALS	3 Initials	
7	GAME PRICING ‡	USA3		28	FREE PLAY	NO	
8	RESET COIN AUDITS	NO		29	CUSTOM MESSAGE	ON	
9	RESET GAME AUDITS	NO		30	FLASH LAMP POWER	NORMAL	
10	RESET HIGH SCORES	NO		31	COIL PULSE POWER	NORMAL	
11	MATCH PERCENTAGE	9%		32	KNOCKER VOLUME	NORMAL	
12	BALLS PER GAME	03		33	GAME RESTART	YES	
13	TILT WARNINGS	01		34	EXTRA BALL PERCENTAGE	25%	
14	REPLAY BOOST	YES		35	BILL VALIDATOR	NO	
15	CREDIT LIMIT	30		36	TOURNAMENT MODE	NONE	
16	ALLOW HIGH SCORES	YES		37	BKGRND MUSIC VOLUME	01	
17	HIGH SCORE #1 AWARDS	01		38	FREEZE TIME	AUTO	
18	HIGH SCORE #2 AWARDS	00		39	UK COIN MECH. TYPE	CURRENT:	
19	HIGH SCORE #3 AWARDS	00		40	UK POST SAVE ENABLED	NO	
20	HIGH SCORE #4 AWARDS	00		41	LOCATION ID	00	
21	DEFAULT HIGH SCORE #1	500,000,000		42	GAME ID	00	

PLEASE NOTE: All Factory Settings (Defaults) described in the tables above/below and within the Adjustment Definitions are for USA Settings only (CPU/Snd Bd. Dip Sw. 300 Settings 1-8 are all "OFF"). Different countries may have different Factory Settings (Defaults).
‡ Adj. 1, 2, 6 & 7 have "Drop-Down" Tables, see definitions.
Adj. 39 & 40 are utilized only for the UK, with UK Dip Switch Option Setting 2 (See ***DR.*** ❸, in the front part of this manual.)

High Roller Casino Adjustments 43-67

	Adjustment Name	USA Default	Your Setting		Adjustment Name	USA Default	Your Setting
43	1ST MB W/ HARD LOCKS	01		56	1ST ATM BON. EXTRA BALL	10	
44	1ST MB W/ HARD RELEASE	02		57	ATM BONUS EB EVERY...	50	
45	SLOT DIFFICULTY	MODERATE		58	MAX ATM BON. EXTRA BALL	04	
46	POKER DIFFICULTY	MODERATE		59	EB MEMORY FROM RAMP	ON	
47	HI-LO DIFFICULTY	MODERATE		60	EB MEMORY FROM GAMES	ON	
48	ROULETTE DIFFICULTY	MODERATE		61	EB MEM. FROM ROLL-N-WIN	OFF	
49	CRAPS DIFFICULTY	MODERATE		62	EB MEM. FROM ATM BONUS	ON	
50	BLACKJACK DIFFICULTY	MODERATE		63	EB MEM. FROM MULTIBALL	OFF	
51	FAST BONUS COUNTDOWN	NO		64	SPECIAL MEM. FROM RNW	OFF	
52	1ST RAMP EXTRA BALL AT	10		65	SPECIAL MEM. FROM BTB	OFF	
53	RAMP EXTRA BALL EVERY...	50		66	ADULT SPEECH ENABLED	YES	
54	MAX RAMP EXTRA BALL AT	05		67	TIMED PLUNGER	OFF	
55	# CASINO GAMES FOR EB	02					

Go To Adjustments Menu

Overview

The **Portals™ Service Menu System** provides 67 Adjustment Functions to vary game difficulty or to customize (e.g. Adjusting: High Score Levels; Balls per game; Game Pricing; Default High Scores; etc.). The Adjustment Functions are divided into 2 groups: • **S.P.I. Adjustments**, are the Game Play Generic Adjustments (1-42) • **High Roller Casino Adjustments**, are the Game Play Specific Adjustments (43-67); Any Adjustment(s) left open or are currently *Not Used*, are allowing for Future Expansion, if any, or are Proprietary. If the code version is upgraded, view Adjustments in the display & write the adjustment(s) in the blank(s) if any adjustment(s) were added. Each group may be viewed manually after entering the **Portals™ Service Menu** (see Chapter 1, **Portals™ Service Menu Introduction**, of this Section). All adjustments can be viewed at a glance with the **Game Adjustment Table** provided on the previous page. If a value is changed, the display will indicate **REQUEST INSTALLED**.

Important: *The **Coin Door** must be **OPEN** allowing the **Memory Protect Switch** to be disabled so changes can be made.*

GO TO ADJUSTMENTS MENU

With the game in the Attract Mode, open the Coin Door and press the **Black "BEGIN TEST" Button**. Select the "ADJ" *Icon* in the **MAIN MENU** with either **Red "LEFT"** or **Green "RIGHT" Button** and press the **Black "ENTER" Button**. The **ADJUSTMENTS MENU** appears.

Important Notes:

Exit any sub-menu and return to the **MAIN MENU** by selecting & activating the "PREV" *Icons*. If no *Icons* appear in the display because of a testing function or special display (e.g. "Help"), press any button to exit.

Selecting & activating the "QUIT" *Icon* from any display will exit the Service Session.

Selecting & activating the "HELP" *Icon* from any display will show a help screen. (An explanation of each *Mini-Icon* at that level will cycle continuously until any active button is pressed.)

In Adjustments, selecting & activating the "-" *Icon* decrements the value setting. Selecting & activating the "+" *Icon* increments the value setting.

Selecting & activating the "ARROW" *Icons* selects the next or previous adj. in the group.

S.P.I. Adjustments (1-42)

From the **ADJUSTMENTS MENU**, select the "S.P.I." *Icon* with either **Red "LEFT"** or **Green "RIGHT" Button** and press the **Black "ENTER" Button**. Select and activate the "RIGHT ARROW" *Icon* to view the 1st adjustment in this group. Continue to select either of the "ARROW" *Icons* to view each adjustment one at a time. Select either the "-" or "+" *Icons* to change the value, if desired. The display will describe the adjustment number, the adjustment name, and the adjustment total or value. The current adjustment will remain in the display until the next adjustment is chosen or when the sub-menu is exited.

Adj. №	Adjustment Name	Adjustment Definition
Adj. 1	**REPLAYS: FIXED / AUTO**	Set between **01% - 50%** and **Fixed** (0%) for Replay Levels. Default is **10%**. Four levels may be selected. Adjustments allow awarding of a credit or an extra ball as each level is exceeded. With the ***Autopercentage Feature***, if the actual replay percentage is higher or lower than that desired, the game will automatically adjust for the new recommended percentage score(s).
Adj. 2	**REPLAY LEVELS**	Set between **1 - 4** or **NONE** for the number of replay levels to be active. A "Drop-Down" Table appears (after selection of number of replay levels) showing Replay Level 1. Adjust Replay Level 1 between 10M - 9.99B. Adjust Replay Level 2, 3 and/or 4 respectively.
Adj. 3	**REPLAY AWARD**	Set for replays to award: **CREDIT, EXTRA BALL, NONE** or **SPECIAL** (When score threshold is achieved, a Playfield Special is lit.) Default is **CREDIT**.
Adj. 4	**FREE GAME LIMIT**	Set between **01 - 09** or **NO FREE GAMES**. Default is **05**. Adjust the maximum number of *Free Games* that may be accumulated per game.
Adj. 5	**EXTRA BALL LIMIT**	Set between **01 - 09** or **NO EXTRA BALLS**. Default is **03**. Adjust the maximum number of *Extra Balls* that may be accumulated per game.

Adjustment Name	Adjustment Definition
Adj. 6 GAME DIFFICULTY	Set to **EXTRA EASY**, **EASY**, **MODERATE, HARD** or **EXTRA HARD.** *(Note: Additional game features which are not adjusted may also change when adjusting this adjustment; see below table.)* Default is **MODERATE**. Any one of the ***INSTALL*** settings (in a "Drop-Down" Table) for this adjustment may be activated to automatically select settings for multiple adjustments affecting game difficulty. Select and activate the "-" or "+" *Icons* to choose the difficulty level required. After activation, the individual adjustments may be readjusted, if desired. Adjustments which typically automatically get changed when changing this adjustment are Game Specific with adjustments values of **EXTRA EASY**, **EASY**, **MODERATE**, **HARD**, **EXTRA HARD**, **ON** or **OFF**. After changing this adjustment, make note of it in the Table on Page 34 (in pencil), and check all Game Specific adjustments, noting all changes in the "Your Setting" Column. *Performing a Factory Reset will revert all adjustments back to the defaults.*

Play Rules: Novelty & 4-Ball, plus Add-A-Ball Settings

The following three combinations are recommended for situations where local laws restrict certain game features regarding the use of replays or the number of balls per game:

Novelty Play Rules - Set to establish recommended settings for no Free Play or Extra Balls:

Adj.	Adjustment Name	Setting	Adj.	Adjustment Name	Setting
1	Replays: Fixed/Auto	Fixed	5	Extra Ball Limit	00
2	Replay Levels	None	11	Match Percentage	Off
3	Replay Award	None	17	High Score #1 Awards	1
4	Free Game Limit	0	18	High Score #2 Awards	0

4-Ball Play Rules - Set to establish recommended settings for 4-Ball Play:

Adj.	Adjustment Name	Setting	Adj.	Adjustment Name	Setting
1	Replays: Fixed/Auto	07%	5	Extra Ball Limit	3
2	Replay Levels	1	11	Match Percentage	4
3	Replay Award	Credit	12	Balls Per Game	5
4	Free Game Limit	5	17	High Score #1 Awards	1
			18	High Score #2 Awards	0

Add-A-Ball Settings -To disable awarding of credits and provide awards with an Extra Ball:

Adj.	Adjustment Name	Setting	Adj.	Adjustment Name	Setting
3	Replay Award	Extra Ball	16	Allow High Scores	No
4	Free Game Limit	00	17-20	High Score #1 - #4 Awards	0
11	Match Percentage	Off			

Adj. 7 GAME PRICING

Set between **USA1** thru **UK6** or **CUSTOM**. Default is **USA3** *(foreign Game Pricing Options are in the Standard Pricing Select Table on the following pages)*. There are two methods available for coin switch programming: Standard & Custom. Standard pricing uses a single adjustment as seen in the first display. See the Standard Pricing Table. If "Custom" is selected, a "Drop-Down" Table appears. Select a pricing scheme shown in the Custom Pricing Table as seen below.

With Adjustment 7 set to **CUSTOM** operating the **Black "Enter" Button** again initiates a drop down menu representing coin switch pulses for the LEFT, CENTER, RIGHT and 4TH Coin Slots. The prescribed the number of pulses are required for 1 Credit. For example, if *Left Coin Pulses,* was set to 02 and *Coin Switch Pulses Required for 1 Credit*, to 01 a coin in the Left Slot would produce 2 Credits. Further, if *Left Coin Pulses,* was set to 01 and *Coin Switch Pulses Required for 1 Credit*, to 02, 2 Coins in the Left Slot would be required for 1 Credit.

Coin Switch Pulses Required for Bonus Credit may be set to post bonus credits when a minimum amount of coins are inserted at one time. For example, if *Left Coin Pulses* was set to 01*, Coin Switch Pulses Required for 1 Credit* to 01 and *Coin Switch Pulses Required for Bonus Credit* to 04, 1 Credit would be posted for each of the first 3 Coins in the Left Slot and 2 Credits for the 4th Coin.

S.P.I. Adjustment 7 Continues on the next page.

S.P.I. Adjustment 7 Continued.

Standard/Custom Pricing - Set for the desired pricing scheme from the Standard Pricing Table as indicated on the Dot Matrix Display. For Custom Pricing, set to **CUSTOM**. When set to **CUSTOM**, the following adjustments are utilized to tailor each individual coin chute:

Left Coin Switch Pulses	Set the number of pulses registered for closure of the Left Coin Switch; **00** to **99**.
Right Coin Switch Pulses	Set the number of pulses registered for closure of the Right Coin Switch; **00** to **99**.
Center Coin Switch Pulses	Set the number of pulses registered for closure of the Center Coin Switch; **00** to **99**.
4th Coin Switch Pulses	Set the number of pulses registered for closure of the Fourth Coin Switch; **00** to **99**.
Coin Switch Pulses Required for 1 Credit	Set the number of pulses required to post one credit; **00** to **99**.
Coin Switch Pulses Required for Bonus Credit	Set the number of pulses required to award the 1st Bonus credit(s); **00** to **99**.
Coin Sw. Pulses Req. for 2nd Bonus Credit	Set the number of pulses required to award the 2nd Bonus credit; **00** to **99**.
Credits awarded for 1st Bonus	Set the number of credits awarded for achieving the first Bonus level; **00** to **99**.

Custom Pricing Table

Coin Mechanisms					<<< Adjustments >>>							
LEFT	CENTER	RIGHT	4TH	*Plays/Coins*	LEFT Pulses	CENTER Pulses	RIGHT Pulses	4TH Pulses	Pulses /Credit	Pulses /Bonus	Pulses /2nd Bonus	Credit /1st Bonus
25¢	$1.00	25¢	N/U	1/25¢ 3/50¢ 1/25¢ 5/$1.00 1/25¢ 6/$1.00	01 01 05	04 04 20	01 01 05	00 00 00	01 01 04	02 04 20	00 00 00	01 01 01
5*SCH*	10*SCH*	10*SCH*	N/U	1/10 S 1/10 S 4/30 S	01 04	02 08	02 08	00 00	02 06	00 00	00 00	00 00
10*p*	50*p*	£1	20*p*	1/30*p* 2/50*p* 5/£1 1/50*p* 3/£1 1/30*p* 4/£1	01 01 01	06 05 05	15 15 12	02 02 02	03 05 03	00 00 00	00 00 00	00 00 00
20¢	N/U	$1.00	N/U	1/60¢ 2/$1.00	01	00	05	00	03	05	00	01

Below and the following page is the **Standard Pricing Select Table** for the individual countries listed. The *Pricing Scheme* is determined in two ways - **1:** The CPU/Sound Board Dip Switch (Sw. 300) Setting; and, **2:** The Country Setting Option. For each country listed, the Dip Switch Setting is shown (Column 1). At this time, not all countries have a *unique* Dip Switch Setting. For the countries without a unique setting, the USA Setting (or all positions in the "OFF" position) is used. In lieu of determining the best *Pricing Scheme* for your location, "pre-sets" were made available which would best suit any given situation. If the Factory Default setting is not the selection you feel is best for your location, choose any of the other pre-set settings. If any of these settings do not suit your needs, then **CUSTOM PRICING** will need to be accomplished (however, any "custom" changes made here will be lost after a **FACTORY RESET** so it is suggested to write down your unique set-up).

The Standard Pricing Select Table Explained:

Column 1: CPU/Sound Board Dip Switch 300 Settings: (self-explanatory). **Column 2:** Country Setting Option: The different available pre-sets are listed. **Columns 3-6:** Coin Mechanisms - These show the coinage through the available slots on the Coin Doors. Different countries use different Coin Doors. For example, USA style Coin Doors, which have only 2 coin acceptors (left & right) may utilize the "Center" slot cable for an optional Bill Validator. Different Coin Doors may have up to 4 coin acceptors. **Columns 7-10:** Pricing Scheme Explained - Shows the number of plays received for the monies required determined by the setting selected.

Standard Pricing Select Table

CPU/SOUND BOARD DIP SWITCH 300 SETTINGS	COUNTRY SETTING OPTION	Coin Mechanisms: COINS THRU ... SLOT: LEFT	CENTER	RIGHT	4TH	Pricing Scheme Explained (Number of "Plays" for Price Amount Shown)			
Pos. 1 2 3 4 5 6 7 8 ON OFF ▼ ▼ ▼ ▼ ▼ ▼ ▼ ▼	USA 1	25¢	$1.00	25¢		1 /25¢			
	USA 2					1 /50¢	2 /75¢	3 /$1.00	
	USA 3 (Default)					1 /50¢			
	USA 4					1 /50¢			
	USA 5					1 /50¢	5 /$2.00		
	USA 6					1 /50¢	2 /'4 X 25¢'	3 /$1.00 Bill ←	Used to promote the Bill Validator
	USA 7					1 /50¢	4 /$1.50	6 /$2.00	
	USA 8					1 /50¢	3 /$1.00		
Pos. 1 2 3 4 5 6 7 8 ON ▲ ▲ ▲ ▲ OFF ▼ ▼ ▼ ▼	Euro 1 (Default)	20¢	50¢	€1.00	€2.00	1 /50¢			
	Euro 2					2 /50¢			
	Euro 3					1 /50¢	5 /€2.00		
	Euro 4					1 /50¢	3 /€1.00		
	Euro 5					1 /€1.00	2 /€1.50	3 /€2.00	
	Euro 6					1 /€1.00	5 /€2.00		

Standard Pricing Select Table - (Continued)

CPU DIP SWITCH SETTINGS, Location SW300 CPU/SOUND BOARD	COUNTRY SETTING OPTION † ‡	Coin Mechanisms — COINS THRU ... SLOT: LEFT	CENTER	RIGHT	4TH	Pricing Scheme Explained (Number of "Plays" for Price Amount Shown)			
		Please Note: for all USA Settings, see previous page (bottom).							
Pos. 1 2 3 4 5 6 7 8 ON ▲ OFF ▼ ▼ ▼ ▼ ▼ ▼ ▼	Austria †	5S	10S	10S		1 /10S	2 /15S	3 /20S	
Pos. 1 2 3 4 5 6 7 8 ON OFF ▼ ▼ ▼ ▼ ▼ ▼ ▼ ▼	Australia 1 ‡	20¢	$A 1	$A 2		1 /$A 1	3 /$A 2		
	Australia 2 ‡					1 /$A 1			
Pos. 1 2 3 4 5 6 7 8 ON ▲ OFF ▼ ▼ ▼ ▼ ▼ ▼ ▼	(Belgium †)	5 BF	20 BF	50 BF		1 /20 BF	3 /50 BF		
		This country uses unique Tokens and/or Debit Cards *only* (pricing varies).							
Pos. 1 2 3 4 5 6 7 8 ON ▲ ▲ ▲ OFF ▼ ▼ ▼ ▼ ▼	(Brazil †)	1 'coin'	4 'coins'	1 'coin'		1 /'2 coins'			
Pos. 1 2 3 4 5 6 7 8 ON ▲ ▲ OFF ▼ ▼ ▼ ▼ ▼ ▼	Canada †	25¢	25¢	Can$ 1		1 /50¢	2 /75¢	3/ Can$ 1	
Pos. 1 2 3 4 5 6 7 8 ON OFF ▼ ▼ ▼ ▼ ▼ ▼ ▼ ▼	Denmark 1 ‡	1 DKr	5 DKr	10 DKr	20 DKr	1 /3 DKr	2 /5 DKr		
	Denmark 2 ‡					1 /2 DKr	3 /5 DKr	7 /10DKr	
Pos. 1 2 3 4 5 6 7 8 ON OFF ▼ ▼ ▼ ▼ ▼ ▼ ▼ ▼	Finland ‡	1 Fmk	5 Fmk			1 /5 Fmk	4 /10 Fmk		
Pos. 1 2 3 4 5 6 7 8 ON ▲ ▲ OFF ▼ ▼ ▼ ▼ ▼	France 1 †	1 Fr	5 Fr	10 Fr	20 Fr	1 /3 Fr	2 /5 Fr	5 /10 Fr	11 /20 Fr
	France 2					1 /5 Fr	3 /10 Fr	7 /20 Fr	
	France 3					1 /3 Fr	2 /5 Fr	4 /10 Fr	9 /20 Fr
	Germany 1	1 DM	2 DM	5 DM		1 /1 DM	6/'1 X 5 DM'		
Pos. 1 2 3 4 5 6 7 8 ON ▲ ▲ ▲ OFF ▼ ▼ ▼ ▼ ▼	Germany 2					1 /2 DM	2 /3 DM	3 /4 DM	4 /5 DM
	Germany 3 †					1 /2 DM	2 /3 DM	3 /4 DM	5 /5 DM
	Germany 4					1 /1 DM	6 /5 DM		
Pos. 1 2 3 4 5 6 7 8 ON OFF ▼ ▼ ▼ ▼ ▼ ▼ ▼ ▼	Greece ‡	50 Dr		100 Dr		1 /50 Dr	3 /100 Dr		
Pos. 1 2 3 4 5 6 7 8 ON OFF ▼ ▼ ▼ ▼ ▼ ▼ ▼ ▼	Hong Kong ‡	1 HK$	2 HK$	5 HK$		1 /5 HK$			
Pos. 1 2 3 4 5 6 7 8 ON OFF ▼ ▼ ▼ ▼ ▼ ▼ ▼ ▼	Hungary ‡	10 Ft	10 Ft	20 Ft		1 /20 Ft	3 /40 Ft		
Pos. 1 2 3 4 5 6 7 8 ON ▲ OFF ▼ ▼ ▼ ▼ ▼ ▼ ▼	Italy 1 †	500 Lit		500 Lit		1 /500 Lit			
	Italy 2					1 /1000 Lit	3 /2000 Lit		
Pos. 1 2 3 4 5 6 7 8 ON ▲ ▲ OFF ▼ ▼ ▼ ▼ ▼ ▼ ▼	Japan 1 †			100¥		1 /100¥			
	Japan 2					1 /100¥	3 /200¥		
Pos. 1 2 3 4 5 6 7 8 ON OFF ▼ ▼ ▼ ▼ ▼ ▼ ▼ ▼	Korea ‡	100 Won		100 Won		1 /100 Won			
Pos. 1 2 3 4 5 6 7 8 ON ▲ OFF ▼ ▼ ▼ ▼ ▼ ▼ ▼	Netherlands 1	1 Fls.	1 Fls.	2.5 Fls.		1 /1 Fls.	3 /2.5 Fls.		
	Netherlands 2 †		2.5 Fls.	5 Fls.		1 /1 Fls.	3 /2.5 Fls.	6 /5 Fls.	
Pos. 1 2 3 4 5 6 7 8 ON OFF ▼ ▼ ▼ ▼ ▼ ▼ ▼ ▼	New Zealand 1 ‡	$NZ 1		$NZ 2		1 /$NZ 1			
	New Zealand 2 ‡					1 /$NZ 1	3 /$NZ 2		
Pos. 1 2 3 4 5 6 7 8 ON ▲ ▲ OFF ▼ ▼ ▼ ▼ ▼ ▼ ▼	Norway 1 †	10 NKr	5 NKr	20 NKr		2 /10 NKr	1 /5 NKr	4 /20 NKr	
	Norway 2					1 /10 NKr	3 /20 NKr		
Pos. 1 2 3 4 5 6 7 8 ON OFF ▼ ▼ ▼ ▼ ▼ ▼ ▼ ▼	Spain ‡	100 Pts		500 Pts		1 /100 Pts	6 /500 Pts		
Pos. 1 2 3 4 5 6 7 8 ON ▲ ▲ ▲ OFF ▼ ▼ ▼ ▼ ▼	Sweden 1 †	1 SKr	5 SKr	10 SKr		1 /10 SKr	2 /15 SKr	3 /20 SKr	
	Sweden 2					1 /5 SKr	2 /10 SKr		
Pos. 1 2 3 4 5 6 7 8 ON ▲ ▲ OFF ▼ ▼ ▼ ▼ ▼	Switzerland 1 †	1 SwF	2 SwF	5 SwF		1 /1 SwF	6 /5 SwF		
	Switzerland 2					1 /1 SwF	3 /2 SwF	9 /5 SwF	
Pos. 1 2 3 4 5 6 7 8 ON ▲ ▲ OFF ▼ ▼ ▼ ▼ ▼ ▼ ▼	UK 1 †	10p	50p	£1	20p	3 /£1	7 /£2	The Pricing Scheme using the New UK Dip Sw. Setting (with 2, 3 & 4 = ON), is the same (UK1 - UK6). Use only with the *New Style Coin Mech. The New 50p & £2* Coins can be accomodated in 5th & 6th Coin Slots.	
	UK 2					4 /£1	8 /£2		
Dip Switch Setting for New 50p / £2:	UK 3					1 /50p	2 /£1	5 /£2	
Pos. 1 2 3 4 5 6 7 8 ON ▲ ▲ ▲ OFF ▼ ▼ ▼ ▼ ▼	UK 4					1 /30p	2 /60p	3 /90p	4 /£1
	UK 5					1 /£1	3 /£2	This is "software controlled" by noting the presence/non-presense of pulses via Normal Coin Slots 1-4 (Left, Center, Right & 4th). If an old style Coin Mech is used, see new adjustment to accomodate.	
SEE NOTES IN PRICING SCHEME	UK 6					3 /£2			

Notes: † Indicates Factory Default for that setting.
‡ Indicates a USA Dip Switch Setting (all positions in the "OFF" position).

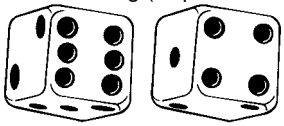

	Adjustment Name	Adjustment Definition
Adj. 8	**RESET COIN AUDITS**	Set to **YES** or **NO**. Default is **NO**. ⚠When set to **YES** *(select the "+" Icon to change)* all *Coin Audits* (Audits 5-11), will be reset to zero.
Adj. 9	**RESET GAME AUDITS**	Set to **YES** or **NO**. Default is **NO**. ⚠When set to **YES** *(select the "+" Icon to change)* all audits will be reset to zero, except for the *Coin Audits* (Audits 5-11) and Audit 12, Software Meter (the only audit which cannot be reset to zero).
Adj. 10	**RESET HIGH SCORES**	Set to **YES** or **NO**. Default is **NO**. When set to **YES** *(select the "+" Icon to change)* all the High Score Levels and associated initials will be restored to the backup settings.
Adj. 11	**MATCH PERCENTAGE**	Set between **0% - 10%** or **OFF**. Default is **9%**. At **0**% the match display occurs at the end of the game but never awards a credit.
Adj. 12	**BALLS PER GAME**	Set between **02 - 05**. Default is **03**. Adjusts the number of balls per game.
Adj. 13	**TILT WARNINGS**	Set to **00**, **01** or **03**. Default is **01**. Adjusts the number of plumb bob tilt switch closures before the ball in play is tilted.
Adj. 14	**REPLAY BOOST**	Set to **YES** or **NO**. Default is **YES**. When set to **YES**, exceeding a replay will set a temporary replay level for each time a replay level is surpassed. This new level will equal the previous replay level (when the replay was awarded) plus 50M for each following game, until the replays have all been played (then the previous level is resumed).
Adj. 15	**CREDIT LIMIT**	Set between **04 - 50**. Default is **30**. Adjusts the maximum number of credits that may be posted.
Adj. 16	**ALLOW HIGH SCORES**	Set to **YES** or **NO**. Default is **YES**. When set to **YES** if a player exceeds any 1 of the 4 High Scores, the player may receive an award (depending on Adj. 3, Replay Award). Set to **NO** to disable this feature. There are 10 High Scores that will allow the player to enter their initials (or name) (See **Adj. 27, High Score Initials**), however, only the top 4 can receive an award if this adjustment is enabled.
Adj. 17	**HIGH SCORE #1 AWARDS**	Set between **00 - 05**. Default is **01**. Adjusts the number of awards awarded for exceeding Level 1 *(the highest of the four (4) Levels).*
Adj. 18	**HIGH SCORE #2 AWARDS**	Set between **00 - 03**. Default is **00**. Adjusts the number of awards awarded for exceeding Level 2.
Adj. 19	**HIGH SCORE #3 AWARDS**	Set between **00 - 02**. Default is **00**. Adjusts the number of awards awarded for exceeding Level 3.
Adj. 20	**HIGH SCORE #4 AWARDS**	Set between **00 - 01**. Default is **00**. Adjusts the number of awards awarded for exceeding Level 4.
Adj. 21	**DEFAULT HIGH SCORE #1**	Set between **1,000,000 - 9,999,000,000** or **00** *(increments of 1M).* Default is **500,000,000**. Adjusts the desired ***High Score Level*** to which Level 1 may be achieved (not affected by **Adj. 26**).
Adj. 22	**DEFAULT HIGH SCORE #2**	Set between **1,000,000 - 9,999,000,0000** or **00** *(increments of 1M).* Default is **400,000,000**. Adjusts the desired ***High Score Level*** to which Level 2 may be achieved (not affected by **Adj. 26**).
Adj. 23	**DEFAULT HIGH SCORE #3**	Set between **1,000,000 - 9,999,000,000***0* or **00** *(increments of 1M).* Default is **350,000,000**. Adjusts the desired ***High Score Level*** to which Level 3 may be achieved (not affected by **Adj. 26**).
Adj. 24	**DEFAULT HIGH SCORE #4**	Set between **1,000,000 - 9,999,000,0000** or **00** *(increments of 1M).* Default is **325,000,000**. Adjusts the desired ***High Score Level*** to which Level 4 may be achieved (not affected by **Adj. 26**).
Adj. 25	**DEFAULT HIGH SCORE #5**	Set between **1,000,000 - 9,999,000,0000** or **00** *(increments of 1M).* Default is **300,000,000**. Adjusts the desired ***High Score Level*** to which Level 5 may be achieved (not affected by **Adj. 26**).
Adj. 26	**HSTD RESET COUNT**	Set between **100 - 9,900** or **OFF** *(increments of 100)*. Default is **2,000**. **HSTD** (**H**igh **S**core **T**o **D**ate). Adjusts the number of games between automatic resets of high score levels to backup settings and ball time averager adjustments. Set to **OFF** for "no reset or adjustment".
Adj. 27	**HIGH SCORE INITIALS**	Set to **3 INITIALS** or **10 LETTER**. Default is **3 INITIALS**. When set to **3 INITIALS**, player is allowed only 3 initials to input. When set to **10 LETTER NAME**, player is allowed to enter 10 initials to input.

	Adjustment Name	Adjustment Definition
Adj. 28	**FREE PLAY**	Set to **YES** or **NO**. Default is **NO**. When set to **YES**, no coins are required for *Game Play.*
Adj. 29	**CUSTOM MESSAGE**	Set to **ON, CHANGE** or **OFF**. Default is **ON**. When set to **CHANGE** *(select the "+" Icon to change settings until "CHANGE" appears in the display, then select the ">>" Icon to access.) This adjustment can be accessed in two (2) ways by either selecting the "S.P.I." Icon* and advancing to this **Adjustment 29**, or can be directly accessed by selecting the "ABCD CUST MSG" *Icon* in the **ADJUSTMENTS MENU**. View the definition at the end of this chapter under the **Custom Message** entry for the operation explanation.
Adj. 30	**FLASH LAMP POWER**	Set to **NORMAL**, **DIM** or **OFF**. Default is **NORMAL**. When set to **DIM** the Flash Lamps impulse power is reduced by **25**% and when set to **OFF** the Flash Lamps will not flash.
Adj. 31	**COIL PULSE POWER**	Set to **NORMAL, HARD** or **SOFT**. Default is **NORMAL**. When **HARD** the coil pulse power is ***increased*** by **12.5**% of the normal pulse rate. When set to **SOFT** the coil pulse power is ***decreased*** by **12.5**% of the normal pulse rate. These adjustments are provided to compensate for Low Line or High Line voltage conditions where the solenoids appear to kicking too weak or too hard. Adjust as required.
Adj. 32	**KNOCKER VOLUME**	Set to **NORMAL, LOW** or **OFF**. Default is **NORMAL**. When set to **LOW**, the volume is decreased 50%. When set to **OFF**, no sound is heard when the "knocker" is sounded.
Adj. 33	**GAME RESTART**	Set to **YES** or **NO**. Default is **YES**. When set to **YES**, a new game may be started during any ball after the first ball is completed (if credits are available). Pressing the **Start Button** during the first ball will add additional players. When set to **NO**, the game disables the **Start Button** after the first ball until the final ball is in play. Review Section 2, Chapter 1, Game Operations & Features for details.
Adj. 34	**EXTRA BALL PERCENTAGE**	Set between **0% - 50%**. This adjustment allows the operator to adjust how frequently the ***Extra Ball Feature*** is made available to the player.
Adj. 35	**BILL VALIDATOR**	Set to **YES** or **NO**. Default is **NO**. When set to **YES**, in *Game Attract Mode* the Display will show an "*Insert Bill Animation*." When set to **NO,** the Display will show an "*Insert Coin Animation*."
Adj. 36	**TOURNAMENT MODE**	Set to **NONE, IFPA, EXPO, PAPA** or **HOME**. Default is **NONE**. Tournament Mode determines the default conditions to quickly prepare a game for tournament play. When this setting is changed ***all audits will be reset*** and ***all adjustments will be initiated*** to the particular style selected. The game will then return to *Game Over Attract Mode*, as if a *Factory Reset* had been performed. **NONE** - Same as a Factory Reset conditions. **IFPA -** Straight 50¢ play, No Replay, No Extra Ball, No High Scores, 2 Tilt Warnings and No Match. **EXPO or PAPA -** Same as **IFPA** settings except ***Free Play*** is enabled. **HOME -** Sets game for ***Free Play***, ***Extra Ball Play***, ***No Replay***, ***10% Match*** & ***30% Extra Ball***.
Adj. 37	**BKGRND (BACKGROUND) MUSIC VOLUME**	Set between **01** - **15**. Default is **01**. After volume is set via Portals Service Buttons (See Sec. 3, Chp. 1, ...Intro) this adjustment can be utilized to adjust the background music (1 all the way on, 15 all the way off) while keeping the Special Sound FX the same level.
Adj. 38	**FREEZE TIME (BALL SAVE)**	Set to **OFF**, **0:01-0:15** or **AUTO**. Default is **AUTO**. When set to **OFF** this feature is unavailable. Set between **0:01** through **0:15** (single increments) for the ball to be sent back into play if the time set is not met (per ball). Set to **AUTO** to automatically adjust the Freeze Timer based on the average ball time.
Adj. 39	**UK COIN MECH. TYPE**	**UK Only Dip Switch Set @ Option 2** Set to **CURRENT: 2 POUND AT #5** if using a Coin Control Mech 74-1129-104**U** (latest version). Set to **OLD: 2 POUND AT #6** if using older version Coin Control Mech 74-1129-104. Default is **CURRENT: 2 POUND AT #5**.

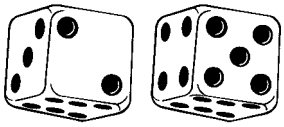

	Adjustment Name	Adjustment Definition
Adj. 40	**UK POST SAVE ENABLED**	**UK Only Dip Switch Set @ Option 2** Set to **YES** or **NO**. Default is **NO**, (UK Default is **YES**). When set to **YES** this feature is available when lit. Set to **NO** to disable this feature. (UK Games have Outlane & Center Post Save Devices which are accessed in a different way; Non-UK Games cannot adjust this setting.)
Adj. 41	**LOCATION ID**	Set between **00** to **9999**. Default is **00**. This adjustment allows the operator to assign a location identification number to the audit print-out sheet. *(Will not be affected by Factory Reset.)*
Adj. 42	**GAME ID**	Set between **00** to **9999**. Default is **00**. This adjustment allows the operator to assign a game identification number to the audit print-out sheet. *(Will not be affected by Factory Reset.)*

Please Note: *For more details on Audit Printing, review Section 3, Chapter 3, Go To Audits Menu (Go To Printer Menu, Page 33). For more details on Factory Reset, review Section 3, Chapter 5, Go To Reset Menu.*

High Roller Casino Adjustments (43-67)

From the **ADJUSTMENTS MENU**, select the "HRC" *Icon* with either **Red "LEFT"** or **Green "RIGHT" Button** and press the **Black "ENTER" Button**. Select and activate the "RIGHT ARROW" *Icon* to view the 1st adjustment in this group. Continue to select either of the "ARROW" *Icons* to view each adjustment one at a time. Select either the "-" or "+" *Icons* to change the value, if desired. The display will describe the adjustment number, the adjustment name, and the adjustment total or value. The current adjustment will remain in the display until the next adjustment is chosen or when the sub-menu is exited.

Adj. Nº	Adjustment Name	Adjustment Definition
Adj. 43	**1ST MB W/HARD LOCKS**	Set to **01** through **10**. Default is **01**. Determines the difficulty of qualifying Multiball. **01** is hardest. **10** is easiest.
Adj. 44	**1ST MB W/HARD RELEASE**	Set to **01** through **10**. Default is **02**. Determines the difficulty of qualifying Multiball. **01** is hardest. **10** is easiest.
Adj. 45	**SLOT DIFFICULTY**	Set to **EXEASY, EASY, MODERATE, HARD** or **EXHARD**. Default is **MODERATE**. Determines how this Feature is started and played.
Adj. 46	**POKER DIFFICULTY**	Set to **EXEASY, EASY, MODERATE, HARD** or **EXHARD**. Default is **MODERATE**. Determines how this Feature is started and played.
Adj. 47	**HI-LO DIFFICULTY**	Set to **EXEASY, EASY, MODERATE, HARD** or **EXHARD**. Default is **MODERATE**. Determines how this Feature is started and played.
Adj. 48	**ROULETTE DIFFICULTY**	Set to **EXEASY, EASY, MODERATE, HARD** or **EXHARD**. Default is **MODERATE**. Determines how this Feature is started and played.
Adj. 49	**CRAPS DIFFICULTY**	Set to **EXEASY, EASY, MODERATE, HARD** or **EXHARD**. Default is **MODERATE**. Determines how this Feature is started and played.
Adj. 50	**BLACKJACK DIFFICULTY**	Set to **EXEASY, EASY, MODERATE, HARD** or **EXHARD**. Default is **MODERATE**. Determines how this Feature is started and played.
Adj. 51	**FAST BONUS COUNTDOWN**	Set to **YES** or **NO**. Default is **NO**. When set to **NO**, this feature is not available. When set to **YES**, this feature is available.
Adj. 52	**1ST RAMP EXTRA BALL AT**	Set to **05** through **20**. Default is **10**. Determines how many ramp shots are needed to qualify for the Extra Ball Feature.
Adj. 53	**RAMP EXTRA BALL EVERY...**	Set to **40** through **75**. Default is **50**. After the Extra Ball Feature is qualified (based on the number adjusted in Adj. 52) for the first time, the subsequent number of ramps shots needed to qualify is the amount set in this adjustment.
Adj. 54	**MAX RAMP EXTRA BALL AT**	Set to **OFF (00)** or **01** through **11**. Default is **05**. Based on Adj. 52 & 53, the Extra Ball Feature will be turned off after the amount set in this adjustment is acheived.
Adj. 55	**# CASINO GAMES FOR EB**	Set to **OFF (00)** or **01** through **06**. Default is **02**. Determines how many Casino Games need to be won to qualify for the Extra Ball Feature.
Adj. 56	**1ST ATM BON. EXTRA BALL**	Set to **05** through **20**. Default is **10**. Determines how many ATM Bonuses awarded are needed to qualify for the Extra Ball Feature.

Adjustment Name		Adjustment Definition
Adj. 57	**ATM BONUS EB EVERY...**	Set to **40** through **99**. Default is **50**. After the Extra Ball Feature is qualified (based on the number adjusted in Adj. 56) for the first time, the subsequent number of ATM Bonuses awarded needed to qualify is the amount set in this adjustment.
Adj. 58	**MAX ATM BON. EXTRA BALL**	Set to **OFF (00)** or **01** through **11**. Default is **04**. Based on Adj. 56 & 57, the Extra Ball Feature will be turned off after the amount set in this adjustment is acheived.
Adj. 59	**EB MEMORY FROM RAMP**	Set to **ON** or **OFF**. Default is **ON**. When set to **ON**, this feature bonus will be retained in memory from ball-to-ball for the same player. When set to **OFF**, this feature will go out at the end of each ball.
Adj. 60	**EB MEMORY FROM GAMES**	Set to **ON** or **OFF**. Default is **ON**. When set to **ON**, this feature bonus will be retained in memory from ball-to-ball for the same player. When set to **OFF**, this feature will go out at the end of each ball.
Adj. 61	**EB MEM. FROM ROLL-N-WIN**	Set to **ON** or **OFF**. Default is **OFF**. When set to **OFF**, this feature will go out at the end of each ball. When set to **ON**, this feature bonus will be retained in memory from ball-to-ball for the same player.
Adj. 62	**EM MEM. FROM ATM BONUS**	Set to **ON** or **OFF**. Default is **ON**. When set to **ON**, this feature bonus will be retained in memory from ball-to-ball for the same player. When set to **OFF**, this feature will go out at the end of each ball.
Adj. 63	**EB MEM. FROM MULTIBALL**	Set to **ON** or **OFF**. Default is **OFF**. When set to **OFF**, this feature will go out at the end of each ball. When set to **ON**, this feature bonus will be retained in memory from ball-to-ball for the same player.
Adj. 64	**SPECIAL MEM. FROM RNW**	Set to **ON** or **OFF**. Default is **OFF**. When set to **OFF**, this feature will go out at the end of each ball. When set to **ON**, this feature bonus will be retained in memory from ball-to-ball for the same player.
Adj. 65	**SPECIAL MEM. FROM BTB**	Set to **ON** or **OFF**. Default is **OFF**. When set to **OFF**, this feature will go out at the end of each ball. When set to **ON**, this feature bonus will be retained in memory from ball-to-ball for the same player.
Adj. 66	**ADULT SPEECH ENABLED**	Set to **YES** or **NO**. Default is **YES**. When set to **YES**, the original game program Adult Graphic Sound & Speech is used. When set to **NO**, the Sound & Speech is suitable for the innocent ears of children.
Adj. 67	**TIMED PLUNGER**	Set to **OFF** or **0:15 - 1:00**. Default is **OFF**. When set to **0:15** to **1:00**, the plunger will "Autoplunge" the ball (at the time set) when the ball is at the beginning of play, awaiting the skill shot by the player.

Custom Message

To go directly to ***Adjustment 29, Custom Message,*** from the **ADJUSTMENT MENU**, select the "CUST MSG" *Icon* either **Red "LEFT"** or **Green "RIGHT" Button** and press the **Black "ENTER" Button**. At the top left corner of the Display, the letter **A** is indicated (blinking) in the first available position (Thirty-Six (36) characters including spaces are available). Vary the letter(s) by operating the Left and Right Flipper Buttons (or **"RED"** or **"GREEN" Buttons**). With the desired letter indicated, depress the **Start Button** to lock in the letter and advance to the next character. Repeat this procedure until the desired message is completed in the display. Select the "<" or ">" characters to back-space (erase) and/or to move forward in an already typed message. After completion, press the **"BLACK" Button**, **"REQUEST INSTALLED"** is indicated and then exits this sub-menu.

Film Star Reset (For the Home Setting)

To reset the game with *Special Home Settings* (*not the normal Factory Setting*), from the **ADJUSTMENT MENU**, select the "STAR" *Icon* either **Red "LEFT"** or **Green "RIGHT" Button** and press the **Black "ENTER" Button**. This *Special Setting* automatically changes ***Adjustment 6, Game Difficulty,*** to **EASY** and ***Adjustment 28, Free Play,*** to **YES**. This setting is determined to be ideal for the home environment.

Take Note:

To **Restore** or **Reset** any of the adjustments to the *Factory Settings (Default)*, review Sec. 3, Chp. 5, **Go To Reset Menu**. Follow the "RESET" *Icon* or "FACT" *Icon* and their explanations.

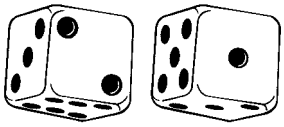

Go To Reset Menu

Overview

The **Portals™ Service Menu System** provides three (3) functions to reset adjustments and/or audits back to the *Factory Setting*. See Chapter 3, Go to Audits Menu, and Chapter 4, Go to Adjustments Menu, for the Game Audits & Adjustments Information. If a reset of ***Coin*** or ***Game Audits*** is performed, the display will indicate **REQUEST INSTALLED** and return to the **RESET MENU**. If a **Factory Reset** is performed, the display will indicate **REQUEST INSTALLED**, the ***Service Session*** is *exited* & returns to the ***Attract Mode***. Please note that once reset, all customized settings are lost! Certain *Audits & Adjustments* cannot be reset (refer to the details below).

GO TO RESET MENU

With the game in the Attract Mode, open the Coin Door and press the **Black "BEGIN TEST" Button**. Select the "RESET" *Icon* in the **MAIN MENU** with either **Red "LEFT"** or **Green "RIGHT" Button** and press the **Black "ENTER" Button**. The **RESET MENU** appears.

Important Notes:

Exit any sub-menu and return to the **MAIN MENU** by selecting & activating the "PREV" *Icon*.

Selecting & activating the "QUIT" *Icon* from the display will exit the Service Session.

Selecting & activating the "HELP" *Icon* from the display will show a help screen. (An explanation of each *Mini-Icon* at that level will cycle continuously until any active button is pressed.)

Reset Coin Audits

From the **RESET MENU**, select the "COIN" *Icon* with either **Red** or **Green Button** and press the **Black Button**. ⚠ All Coin Audits (See **Fig. 1**) will be reset to Factory Settings. The display will indicate **REQUEST INSTALLED** and return to the **RESET MENU**. Coin Audits can also be reset from the **ADJUSTMENTS MENU**, **S.P.I. ADJUSTMENT 8**. See Chapter 4, Go to Adjustments Menu, of this section. After selecting this *Icon*, all of the ***Coin Audits (5-11)*** are reset to zero.

Reset Game Audits

From the **RESET MENU**, select the "AUD" *Icon* with either **Red** or **Green Button** and press the **Black Button**. ⚠ All Game Audits (See **Fig. 2**) will be reset to Factory Settings. The display will indicate **REQUEST INSTALLED** and return to the **RESET MENU**. Game Audits can also be reset from the **ADJUSTMENTS MENU**, **S.P.I. ADJUSTMENT 9**. See Chapter 4, Go to Adjustments Menu, of this section. After selecting this *Icon*, all of the ***Audits*** are reset to zero, except for the Coin Audits (Audits 5-11) and Audit 12, Software Meter. Audit 12 is the only audit which cannot be reset.

Fig. 1

• Reset Coin Audits	
Earnings Audits (Coin Audits Only 5-11)	
Au. Nº	Description
1-4	The first 4 Audits in the game.
5	Coins Thru Left Slot
6	Coins Thru Right Slot
7	Coins Thru Center Slot
8	Coins Thru 4th Slot
9	Total Coins
10	Total Earnings
11	Meter Clicks
12	Software Meter
13 +	The remainder of the Audits.

Fig. 2

• Reset Game Audits	
Earnings (1-4), Generic/Specific Audits (13+)	
Au. Nº	Description
1-4	The first 4 Audits in the game.
5	Coins Thru Left Slot
6	Coins Thru Right Slot
7	Coins Thru Center Slot
8	Coins Thru 4th Slot
9	Total Coins
10	Total Earnings
11	Meter Clicks
12	Software Meter
13 +	The remainder of the Audits.

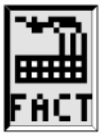

Factory Reset

From the **RESET MENU**, select the "FACT" *Icon* with either **Red** or **Green Button** and press the **Black Button**. ⚠ All adjustments will be reset to *Factory Settings* (except for Proprietary Adjustments). The display will indicate **REQUEST INSTALLED** and exit the Service Session. See Chapter 4, Go to Adjustments Menu, of this section, for the *Factory Settings* in the **Game Adjustment Table**.

Example:

From the **MAIN MENU**, use the **Red** or **Green Buttons** to select the "RESET" *Icon* (**GO TO RESET MENU**).

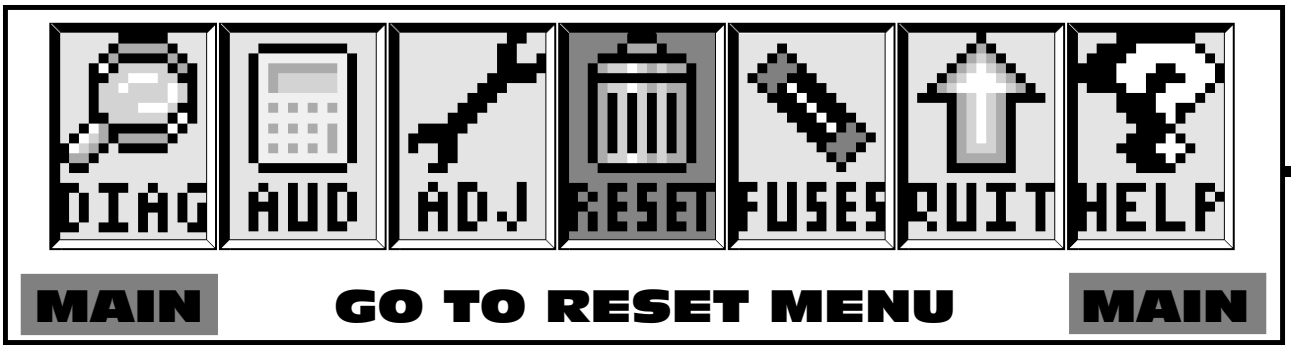

Press the **Black Button** to activate this **ICON**. This will bring up the **RESET MENU**.

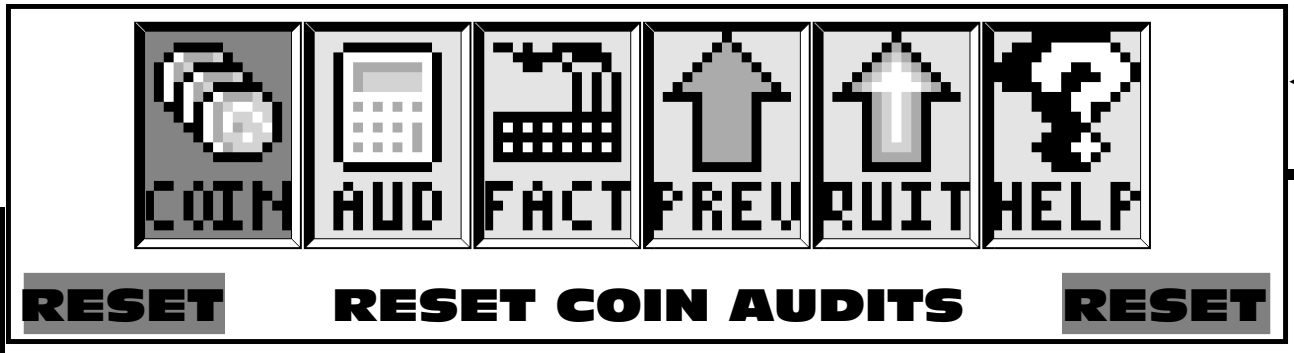

The **RESET MENU** now appears with the "COIN" *Icon* (**RESET COIN AUDITS**) flashing:

DO NOT PRESS THE START BUTTON **AFTER SELECTING ANY THREE OF THESE ICONS UNLESS THIS IS WHAT IS DESIRED (SETTINGS WILL BE LOST)! PLEASE READ THE PREVIOUS PAGE FOR EXACTLY WHAT WILL HAPPEN IF ANY OF THESE THREE ICONS ARE ACTIVATED.**

From the **RESET MENU**, select any of the *Icons* ("COIN", "AUD" or "FACT") with either **Red** or **Green Button** and press the **Black Button** to activate the **ICON** chosen.

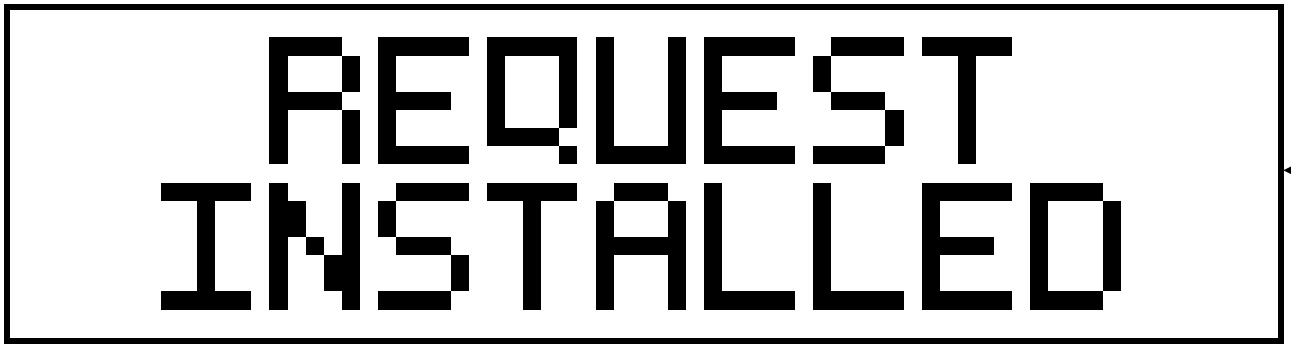

If the "COIN" or "AUD" *Icons* are chosen and activated, the affected audits (see previous page) will be reset, the display will indicate **REQUEST INSTALLED** and the display will return to the **RESET MENU**.

If the "FACT" *Icon* is chosen and activated, all adjustments will be reset back to the *Factory Settings.* The display will indicate **REQUEST INSTALLED** (momentarily), the ***Service Session*** is automatically *exited* and returns to the ***Attract Mode***.

Go To Fuses List

Overview

The **Portals™ Service Menu System** provides a current Fuse List for this game. The fuses are located in the Backbox (on the Display Power Supply Board and the I/O Power Driver Board), and also in the Cabinet (under the playfield by the Flippers and/or by any unique assembly, such as magnets). See the front of this manual (page **DR. ❶**) for the complete Fuse List in the *Quick Reference Fuse Chart* and note the drawings.

GO TO FUSES LIST

With the game in the Attract Mode, open the Coin Door and press the **Black "BEGIN TEST" Button**. Select the "FUSES" *Icon* in the **MAIN MENU** with either **Red "LEFT"** or **Green "RIGHT" Button** and press the **Black "ENTER" Button**. Select and activate the "RIGHT ARROW" *Icon* to view the 1st fuse in this group. Continue to select either of the "ARROW" *Icons* to view each fuse one at a time. The display will describe the fuse identification number (e.g. F1, F6, F7, etc.), location of fuse (i.e. Backbox: Board name located on; or Cabinet: Under the playfield or in Service Outlet), rating of fuse (e.g. 5A 250v S.B. - i.e. 5 Amp, 250 volt, Slo-Blo), and 'use of fuse' (e.g. 90v DC High Voltage Power, etc.). The current fuse listed will remain in the display until the next fuse is chosen or when the sub-menu is exited.

Important Notes:

Exit any sub-menu and return to the **MAIN MENU** by selecting & activating the "PREV" *Icons*. If no *Icons* appear in the display because of a testing function or special display (e.g. "Help"), press any button to exit.

Selecting & activating the "QUIT" *Icon* from any display will exit the Service Session.

Selecting & activating the "HELP" *Icon* from any display will show a help screen. (An explanation of each *Mini-Icon* at that level will cycle continuously until any active button is pressed.)

Selecting & activating the "ARROW" *Icons* selects the next or previous fuse in this group.

Example:

From the **MAIN MENU**, use the **Red** or **Green Buttons** to select the "FUSES" *Icon* (**GO TO FUSES LIST**).

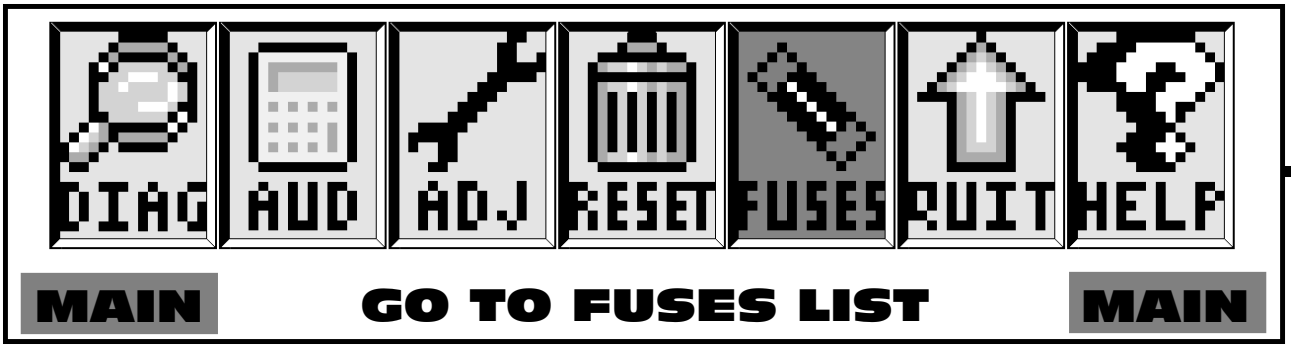

Press the **Black Button** to activate this **ICON**. This will bring up the **FUSES LIST**.

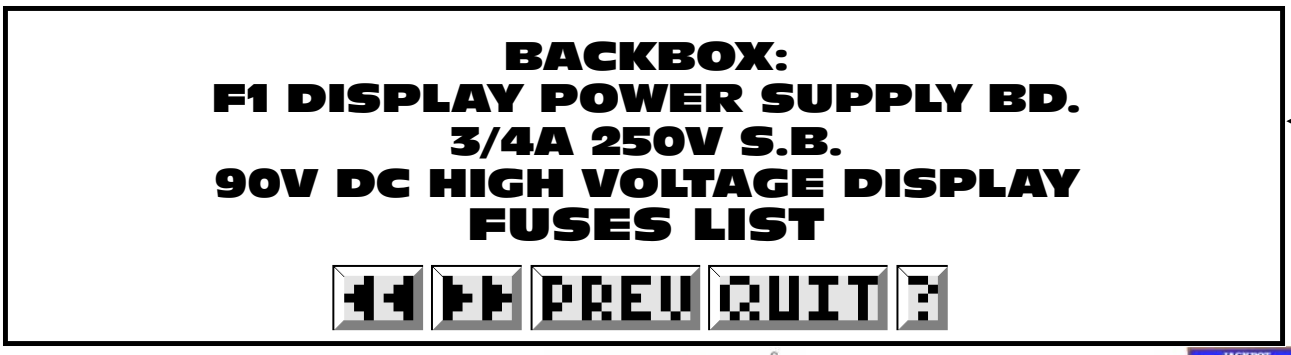

▼ BACKBOX LAYOUT LOCATIONS: Fuses, Bridges, Relays & ROMs ▼

CAUTION: *For continued protection against risk of fire, replace only with same type of fuse having the same electrical rating!*

QUICK REFERENCE FUSE CHART

Backbox Fuses			
LOC: DISPLAY POWER SUPPLY (P.S.) BOARD			
F1	¾A 250v S.B.	90v DC	High Voltage Display
LOC: I / O POWER DRIVER BOARD			
F6	7A 250v S.B.	50v DC	Primary High Power Coils/Flippers
F7	5A 250v S.B.	20v DC	Low Power Coils
F8	5A 250v S.B.	12v DC	Logic Power
F9	5A 250v S.B.	12v DC	Logic Power
F20	3A 250v S.B.	50v DC	Magnet(s)
F21	3A 250v S.B.	50v DC	Coils
F22	8A 250v S.B.	18v DC	Controlled Lamps
F23	4A 250v S.B.	5v DC	Logic
F24	5A 250v S.B.	6.3v AC	G.I. Lamps (BRN-WHT to WHT-BRN)
F25	5A 250v S.B.	6.3v AC	G.I. Lamps (YEL to WHT-YEL)
F26	5A 250v S.B.	6.3v AC	G.I. Lamps (GRN to WHT-GRN)
F27	5A 250v S.B.	6.3v AC	G.I. Lamps (VIO to WHT-VIO)
F28	3A 250v S.B.	24v AC	Motors / Aux. (If Used)
Cabinet Fuses			
LOC: SERVICE (AC) OUTLET BOX (Cabinet Bottom)			
n/a	8A 250v S.B.	115v AC	Main Fuse Line (Domestic or USA)
n/a	5A 250v S.B.	220v AC	Main Fuse Line (International)
High Roller Casino P/F Fuses			
LOC: UNDER PLAYFIELD (By Assemblies Listed)			
n/a	3A 250v S.B.	50v DC	Rt. Flipper (BLU-YEL⇆RED-YEL)
n/a	3A 250v S.B.	50v DC	Lt. Flipper (GRY-YEL⇆RED-YEL)
n/a	3A 250v S.B.	50v DC	Ramp Diverter (GRY-YEL⇆RED-YEL)

For Backbox & Cabinet General Parts, review Section 4, Chapter 1, Parts Identification & Location (The Pink Pages).
For Schematics and/or Component Parts on above Boards, review Section 5, Chapter 4, Printed Circuit Boards (The Yellow Pages).

Display Power Supply Board

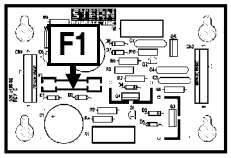

CPU / Sound Board

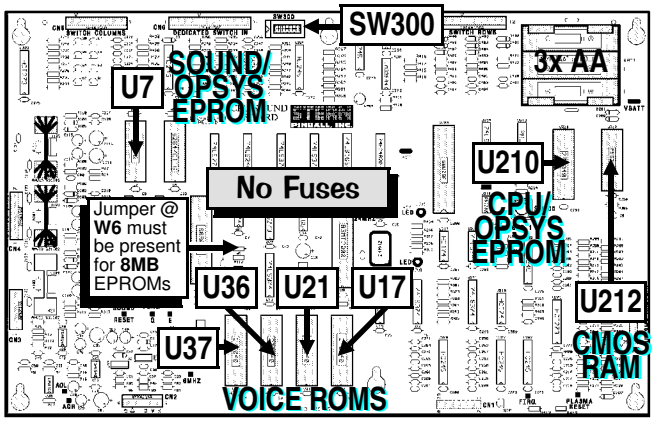

I/O Power Driver Board

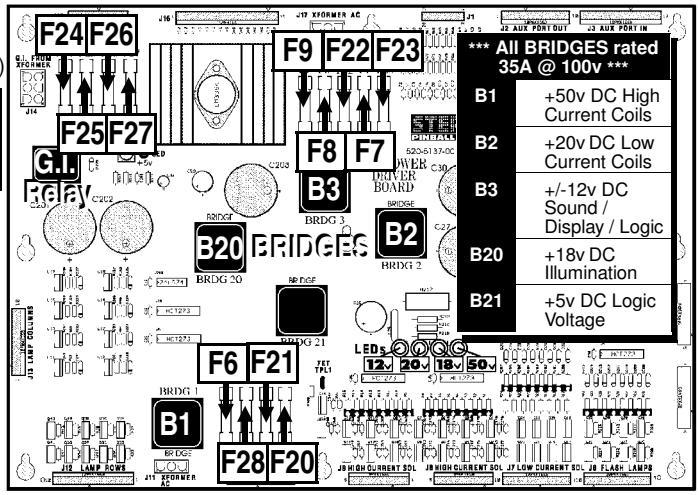

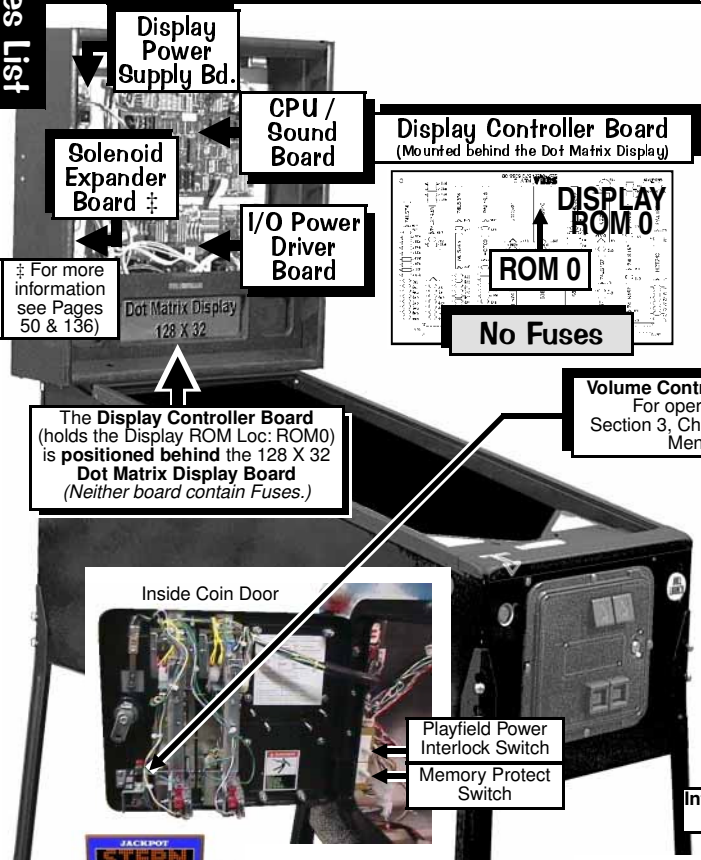

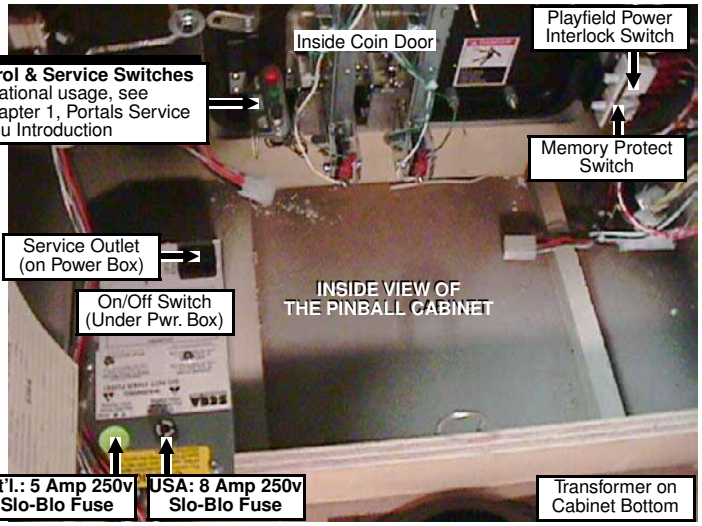

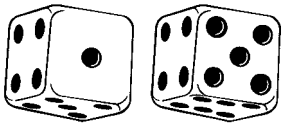

Section 3, Chapter 6: Go To Fuses List

Go To Help Screen

Overview

The **Portals™ Service Menu System** provides help screens in each display (except if the display is in a testing mode). Each screen is basic and some terms may vary. At the beginning of each chapter in this section, *Icons* are shown and described to give detail of the particular function of the individual *Icons*. The table on the previous page was designed to help answer some questions of situations which may arise.

GO TO HELP SCREEN

With the game in the Attract Mode, open the Coin Door and press the **Black "BEGIN TEST" Button**. Select the "HELP" *Icon* in the **MAIN MENU** with either **Red "LEFT"** or **Green "RIGHT" Button** and press the **Black "ENTER" Button**. The **HELP SCREEN** appears cycling through the different icon usages pertinent to that menu level.

MENU HELP SCREEN
USE THE RED OR GREEN BUTTONS TO CHANGE THE SELECTED ICON. PRESS THE BLACK BUTTON TO ACTIVATE THE SELECTED ICON. THE FLIPPER & START BUTTONS FUNCTION IN THE SAME WAY.

Important Notes:

Exit any sub-menu and return to the **MAIN MENU** by selecting & activating the "PREV" *Icons*. If no *Icons* appear in the display because of a testing function or special display (e.g. "Help"), press any button to exit.

Selecting & activating the "QUIT" *Icon* from any display will exit the Service Session.

Selecting & activating the "HELP" *Icon* from any display will show a help screen. (An explanation of each *Mini-Icon* at that level will cycle continuously until any active button is pressed.)

These "Mini-Icons" vary in functionality depending in what sub-menu they are used. Refer to the beginning of each chapter in this section for the function they serve in that menu or select the "HELP" *Icons* in the display where the *Icon* in question is being used.

Review Chapter 1, Introduction:	How to enter the **Portals™ Service Menu**. The chapter outlines the entire **Portals™ Service Menu**. View the **Icon Tree** in this manual which describes the names and menu descriptions of each *Icon*. View the display, after selecting and activating either of the "HELP" or "?" *Icons*.
Review Chapter 2, Go to Diagnostics Menu:	Find all the tests needed to troubleshooting the game.
Review Chapter 3, Go to Audits Menu:	Gather play information and printing functions (downloading).
Review Chapter 4, Go to Adjustments Menu:	Customize the game to vary difficulty of play or to change functions of the game.
Review Chapter 5, Go to Reset Menu:	Reset audits and adjustments to Factory Settings.
Review Chapter 6, Go to Fuses Menu:	View the location & descriptions of the game fuses (the same information is referenced in the Fuse Chart Table on DR. ❶).

This concludes the **Portals™ Service Menu**. Review the Table of Contents at the beginning of this manual, and the detailed Table of Contents for Section 3 to quickly find the information required. The remainder of the sections in this manual will cover all the parts in this game and provide helpful information to aide in troubleshooting. If questions still arise after reading this Section completely, call our Technical Support Department.

PORTALS™ SERVICE MENU
PROBLEM/SOLUTION TABLE

Use this table for a quick simple solution(s) guide. For more technical assistance view Section 5.

PROBLEM	SOLUTION
Will not enter the Service Mode after depressing the **Black "BEGIN TEST" Button**.	• Check the Service Switch(es) (**Red, Green & Black Buttons**) for loose connections or bad Ground. • Check the associated wiring harness to/from the CPU Board Connector CN6. • Check CPU Board, possibly failed.
All Service Buttons (**Red, Green** and **Black**) appear nonfunctional.	• Check the Service Switches for poor connections or broken wires.
The **Green Service Button** in the Attract Mode will not enter the Service Credits Menu to add Service Credits.	• Check to make sure the Game is not in "Free Play." *If the game is set to Free Play, adding Service Credits is not required.* • Check the Service Switche(s) for poor connections or broken wires.
The display blanks out.	• Check the Dot Matrix Display for loose wiring harness connections. • Check F1 (3/4A Fuse) on the Display Pwr. Supply Bd. Refer to Section 5, Chapter 4, Schematics & Troubleshooting.
Icons *"scroll"* along continuously in the **MAIN MENU**.	• If the Service Switch Set and/or the Coin Door was replaced, ensure the Locking Mechanism on the **Green Button** is removed. If the Green Button "clicks" and locks into an up/down position, the Green Button has this lock switch. Remove it. (Ref. to Svc. Bulletin #74.)
The **Start** and **Flipper Buttons** do not select or activate *Icons* in the **SWITCH TEST MENU**.	• This is normal. These switches are deactivated, as they are a part of the Switch Test. Use the **Red "LEFT" or Green "RIGHT" & Black "ENTER" Buttons** in this Sub-Menu (See Chapter 1).
Can't move selection of *Icon* with the **Left** and/or **Right Flipper Buttons**.	• Check the **Flipper Buttons** for loose connections or bad Ground and refer to Section 5, Chapter 2, Playfield Wiring, #-Flipper Circuit Wiring Diagram. • This is normal ***only*** in Diagnostic's Switch & Active Switch Tests (see previous Problem).
Some *Icons* appear non-functional in the **PRINTER MENU(S)**.	• If no printing equipment is connected, the "-" *Icon*, "+" *Icon* and "RUN" *Icon* will appear not to function (see the end of Chapter 3).
Some *Icons* appear non-functional in the **GAME SPECIFIC MENU** under the **DIAGNOSTICS MENU**.	• If there is no other test under this Menu, the "Left Arrow" & "Right Arrow" *Icons* will appear not to function. The remaining *Icons* should function as normal. *Note: If there is no Game Specific Special Test, the "**GAME SPECIFIC**" Icon will not invoke another display.*
The display returns to the **ATTRACT MODE** exiting the Service Session from the **FACTORY RESET MENU**.	• This is normal. After a **FACTORY RESET**, the Service Session is automatically exited (see Chapter 4 (end) or Chapter 6).
In **COIL TEST MENU**, the coils and flashlamps ***do not*** fire after activating the "RUN" *Icon*.	• Ensure the **POWER INTERLOCK SWITCH** (See figure on front inside cover) ***is pulled out***.
In **ADJUSTMENTS MENU**, with the Coin Door **CLOSED**, adjustments are not getting changed as desired while using the **Flipper** & **Start Buttons** to select *Icons* and change values.	• This is normal. The ***Memory Protect Switch*** is enabled when the Coin Door is **CLOSED**. Changes can be made with the Coin Door **OPEN** only.
In **Portals™ Service Menu**, the volume cannot be adjusted with the **Red** or **Green Buttons**.	• The Volume adjustment can only be made when in the **Attract Mode**. The **Volume Mode** is entered by pressing the **Red "VOLUME" Button**. Then use the **Red** or **Green Button** to increase/decrease volume. (Red "LEFT" decrements; Green "RIGHT" increments.)
In **Portals™ Service Menu**, the display seems to lock up, or the Help Display appears to be non-functional.	• If you cannot clear the situation by exiting back one Menu, exit completely out of the **Portals™ Service Menu**, and re-enter. If the problem persists, call Technical Support for additional help.

Parts Identification & Location (The Pink Pages)

Overview

This section provides the Part Nºs and locations of all the components in this pinball machine. The parts are arranged in three groups: **BACKBOX**, **CABINET** & **PLAYFIELD**. Generic parts which may change as production continues (quantity and/or size) are listed together. Quantities greater than 0 indicates that the part is used in this game. Since quantity changes *may occur*, an item indicating "0" may be used. Compare the item which needs to be replaced with the drawings provided (the *Posts, Sockets, Bulbs & Rubber Rings* are drawn actual size). Major Assemblies & Ramps are detailed in the Blue Pages, Chapter 2. **Important:** Read all "**Take Note:**" items.

Section 4, Table of Contents

Chapter 1 (The Pink Pages)

Overview 49

BACKBOX:

Backbox (High Roller Casino) Assembly. 50
Speaker Panel Assy. for the Backbox..... 51

CABINET:

General Parts & Switches 52-53

PLAYFIELD:

General Parts & Switches (Below).....54
General Parts & Switches (Above) 55
Rubber Parts 56
Plastics, Metal Covers, Mylar & Decals 57
Rails, Wire Forms and Ball Guides 58
Metal Posts (Screws) and Nuts 59
Metal Spacers 60
Plastic Posts and Spacers 61
Small Bayonet Type Bulbs and Sockets 62
Large Bayonet Type Bulb and Sockets 63
Wedge Base Bulbs and Sockets.....64

Chapter 2 (The Blue Pages)

Overview 65

Major Assembly Drawings 66-82

Backbox (High Roller Casino) Assembly, 505-6002-65-65 (Items 1-25)

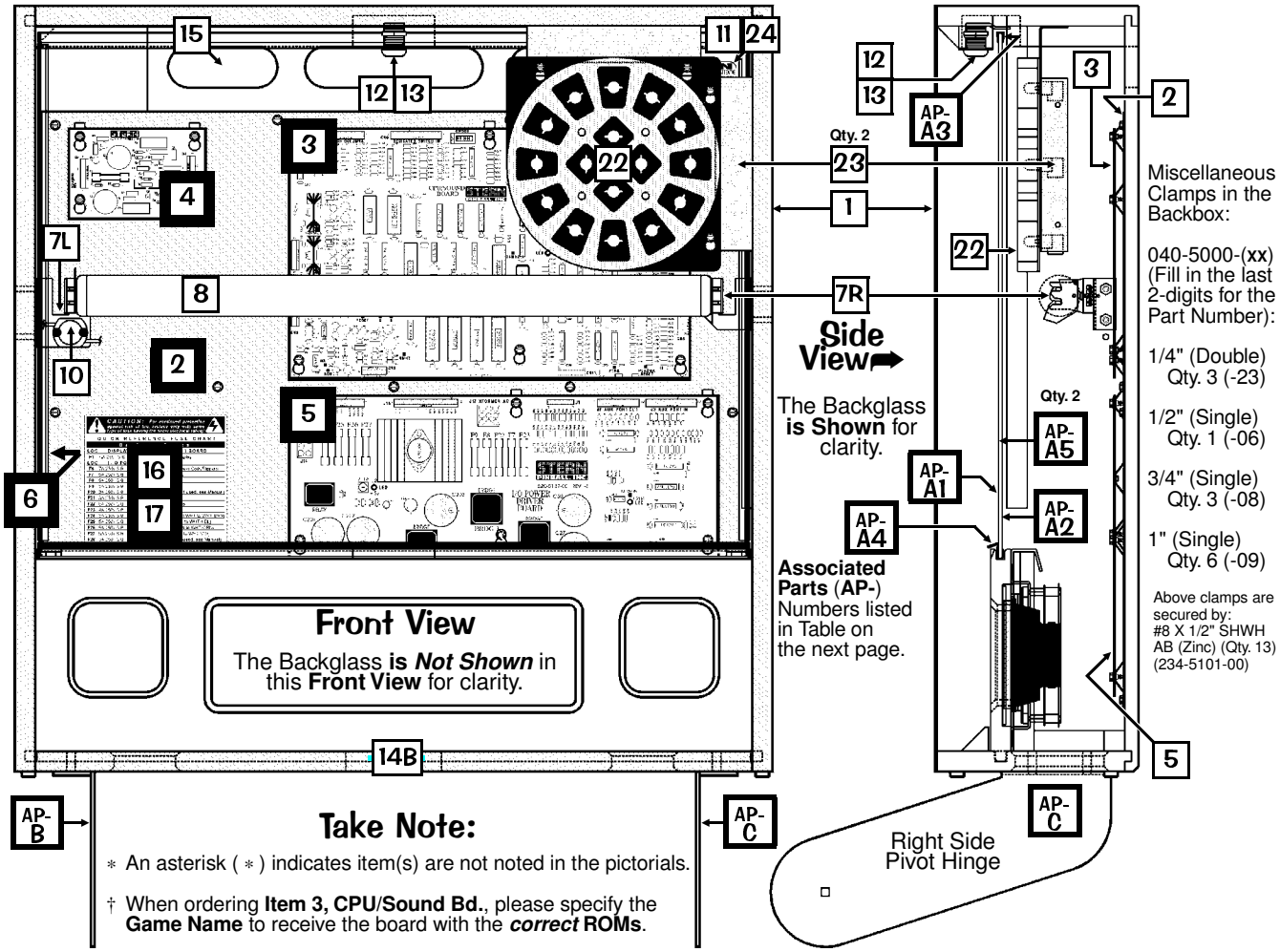

Take Note:

∗ An asterisk (∗) indicates item(s) are not noted in the pictorials.

† When ordering **Item 3, CPU/Sound Bd.**, please specify the **Game Name** to receive the board with the ***correct* ROMs**.

Nº	BACKBOX PART NAME	QTY.	SPI PART Nº
1	Backbox (High Roller Casino)	1	525-5558-65
Item 1 comes with White T-Molding installed.			
2	PCB Metal Mounting Plate	1	535-5809-04
Item 2 is secured to Item 1 by: #8 X 1/2" SHWH AB (Zinc) (Qty. 8) (234-5101-00), #10 Washer 7/32" ID X .5" OD X 1/16" (Qty. 4) (242-5003-00) and #8 Lock Washer (Qty. 2) (246-5001-00)			
3 †	CPU/Sound Board (Mono) FCC-FEB98	1	520-5136-16
4	Display Power Supply Board	1	520-5138-00
5	I/O Power Driver Board	1	520-5137-01
Items 3, 4 & 5 are secured to Item 2 by: #8-32 X 3/8" HWH MS (Qty. 19) (237-5903-00)			
6	Solenoid Expander Board (UK Only)	0	520-5192-00
Item 6 is required for UK Games Only *to support the Left & Right Outlane Ball Deflectors & Center Up/Down Post Assemblies not supported in the Normal Coil Matrix of Q1-Q32.*			
7L	Fluorescent Light Bracket Assy. Left	1	515-6545-00
ORDERING ABOVE (ITEM 7) SUB-ASSY. PART Nº WILL INCLUDE:			
7A	Fluorescent Light Bracket Left	1	535-7739-00
7B	Lamp Holder (Self-Locking)	1	077-5214-00
7C	#6-32 X 5/8" PPH MS (Sems) Zinc	1	232-5203-00
7D	Starter Base (with Leads)	1	077-5213-00
7E	#4-40 X 1/2" PPH MS (Sems) Zinc	2	237-5813-00
7R	Fluorescent Light Bracket Assy. Right	1	515-6545-01
ORDERING ABOVE (ITEM 7) SUB-ASSY. PART Nº WILL INCLUDE:			
7A	Fluorescent Light Bracket Right	1	535-7739-01
7B-7C	Identical to Items 7B-7C above.		See 6B-6C
Items 7L & 7R are secured by: #10-24 X 1-1/4" Carriage Bolt Sq. Neck (Qty. 2/per) (231-5012-00), #10-24 Keps Nut (Qty. 2/per) (240-5207-00) **and** 3/4" X 3" Reinforced Strapping Tape (Qty. 1, Sold in 12" Lengths only) (626-5040-00)			
8	Fluorescent Tube (F20T12CW)	1	165-5031-02
9∗	Ground Strap (5") (by Item 11)	1	600-5006-05
10	Starter - Fluorescent (FS2 Light)	1	165-5011-01

Nº	BACKBOX PART NAME	QTY.	SPI PART Nº
11	Ballast SP2/K 5/8" Core 120v 50/60 Hz 13W	1	010-5015-00
	Ballast Mounting Plate		535-8657-00
Item 11 is secured to Item 1 by: #6 X 5/8" HWH AB (Zinc) (Qty. 2) (234-5102-04)			
12	Lock Mounting Plate for 2000	1	535-8128-01
13	Camlock (Cam 440X) & Key	1	355-5018-02
Items 12-13 are secured by: #8 X 5/8" TP Torx T20 (Qty. 4) (237-5947-00)			
14A	*#1 Roto Lock Male (on Cabinet)*	*1*	*355-5006-01*
14B	#1 Roto Lock Female (R2-0002-02)	1	355-5006-02
Item 14B is secured by: #10-24 X 1-3/4" CBSN (Qty. 2) (231-5022-00), #10-24 Keps Nut (Qty. 2) (240-5207-00) **and** #10 Washer 7/32" ID X .5" OD X 1/16" (Qty. 2) (242-5003-00)			
15	Back Vent Grill 2-1/2" X 18"	1	545-5072-02
Item 15 is secured by: Staple 5/16" (Qty. 24) (631-5000-00)			
16	Fuse Description Decal (Generic)	1	820-6152-00
17	Fuse Description Decal Game Nº 65	1	820-6152-65
18∗	Fuse Label (UL)	1	820-6143-00
19∗	Backbox Date Label	1	820-5091-00
20∗	Ribbon Cable, 20-Pin (4")	1	036-5000-04
21∗	Ribbon Cable, 26-Pin (68")	1	036-5001-68
Item 20 (20-Pin) connects the CPU/Sound Board to the I/O Power Driver Board. **Item 21 (26-Pin) connects** the CPU/Sound Board to the Display Controller Board.			
22	Value Wheel Plastic (Buty.) Lamp Bd. w/Divider Foam (545-5963-00) Self-Adhesive	1	515-7124-00-65
Please Note: *For #44 / #555 Sockets & Bulbs located in the backbox, see Page 62 (Items A & 8) and Page 64 (Items D & 7).*			
23	Value Wheel Support Bracket	2	535-8754-00
Items 22 & 23 are secured by: #8 X 1/2" SHWH AB (Zinc) (Qty. 1 per hole) (234-5101-00)			
24	"CAUTION - VERY HOT" Decal	1	820-6266-00

Speaker Panel Assy. for the Backbox (H.R. Casino), 515-6888-03 (Items 1-15)
and Assoc. Parts: Backglass Assembly & Pivot Hinges (Left & Right) (See Below Table)

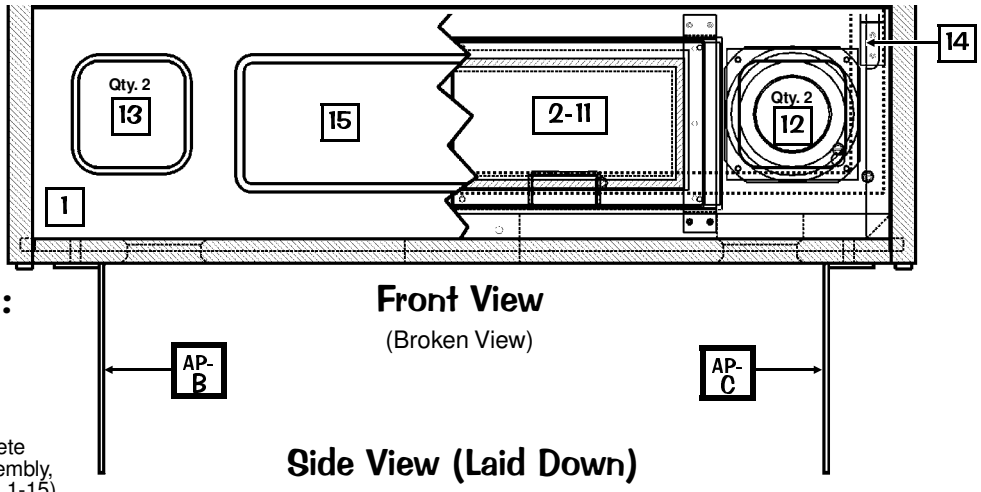

Take Note:

* An asterisk (*) indicates item(s) are not noted in the pictorials.

1. Ordering the complete Speaker Panel Assembly, 515-6888-03 (Items 1-15) will include all hardware.

Front View
(Broken View)

Side View (Laid Down)
For clarity, the below drawing ***does not show*** the speaker(s).

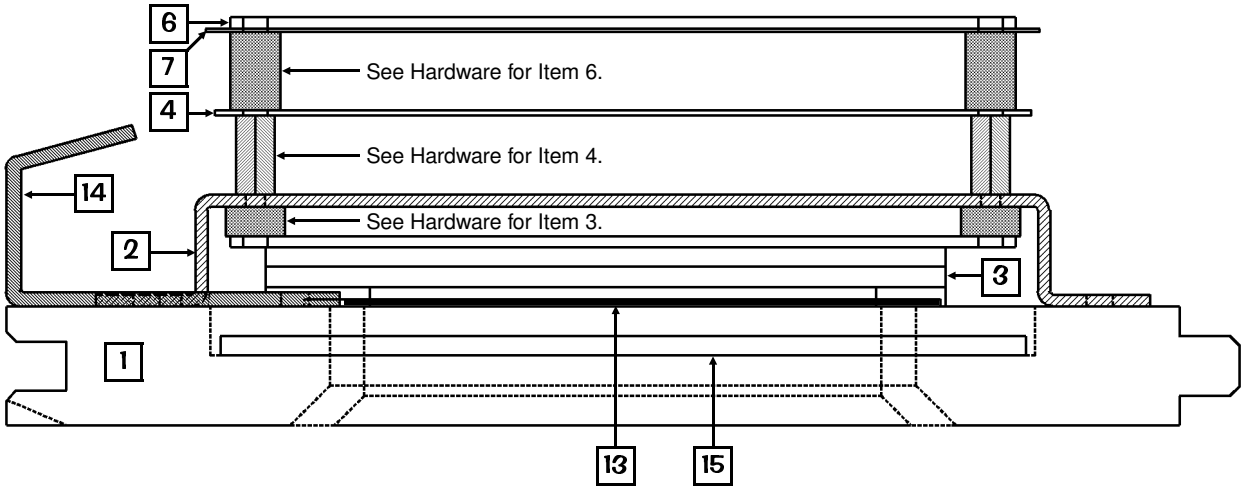

Nº	SPEAKER PANEL PART NAME	QTY.	SPI PART Nº
1	Speaker Panel (Black Wood)	1	525-5515-00
2	Dot Matrix Disp. Bd. Mounting Bracket	2	535-8368-01
Item 2 is secured to Item 1 by: #8 X 3/4" HWH AB (Zinc) (Qty. 4/per) (234-5103-00)			
3	Dot Matrix Display Board 128 X 32	1	520-5052-00
Item 3 is secured to Item 2 by (at corners): 3/16" X 3/8" Spacer Gray (Qty. 4) (254-5000-18) **and** #6-32 X 1/2" HWH Swage (Serr) Zinc (Qty. 4) (237-5976-03) **Item 3 is secured to Item 4 (at the top center) by:** 3/4" X 1/4" Hex Spacer #6-32 Tap (Qty. 1) (254-5008-04) **and** #6-32 X 1/4" PPH MS (Sems) Zinc (Qty. 1) (232-5200-00)			
4	Static Shield (Steel Plate)	1	535-6437-00
Item 4 is secured to Item 2 by: 1/2" X 1/4" Hex Spacer #6-32 Tap (Qty. 4) (254-5008-03) **and** #6-32 X 1/2" PPH MS (Sems) Zinc (Qty. 2, on Left Side only) (232-5202-00)			
5*	Edge Protector (on Item 4)	2	545-5592-01
6	Display Controller Board FCC-FEB98	1	520-5055-03
Item 6 is secured to Item 4 by: 1/2" X 5/16" X .144 ID Spacer Tap (Qty. 3) (254-5014-00), #6-32 X 3/4" PPH MS (Sems) Zinc (Qty. 3) (237-5504-00), 1/2" X 1/4" Hex Spacer #6-32 Tap. (Qty. 1) (254-5008-03) **and** #6-32 X 1/4" PPH MS (Sems) Zinc (Qty. 2) (232-5200-00)			
7	RF Shield	1	820-5092-00
Item 7 is secured inbetween: "Item 6" and its' mounting hardware described.			
8*	Ground Strap (25") (on Items 4, 6, 12)	4	600-5006-25
9*	1/2" Clamp (Single) (on Item 4)	1	040-5000-06
10*	Ribbon Cable, 14-Pin	1	036-5260-00
Item 10 (14-Pin) connects the Dot Matrix Disp. Board to the Disp. Controller Board.			
11*	Foam 3/16" Thk. X 1/4" X 36"	6	626-5026-00
Above Item 11 is self-adhesive. Located between Items 3 & 17. Sold in 12" Lengths only.			
12	Speaker (Shld.) 4" 8Ω MG Elec #4060SH	2	031-5004-01
13	Speaker Grill (Black w/no Artwork)	2	535-8081-01

Nº	SPEAKER PANEL PART NAME	QTY.	SPI PART Nº
14	Speaker Panel Hook Bracket	2	535-7009-02
Items 12, 13 & 14 are secured by: #8 X 3/4" HWH AB (Zinc) (**Items 12/13:** Qty. 4/per; **Item 14:** Qty. 2/per) (234-5103-00)			
15	Plastic Shield (Display Cover)	1	545-5884-00
Item 15 is secured to Item 2 by: #6 X 3/8" HWH AB (Zinc) (Qty. 8) (234-5000-00)			

The Associated Parts AP-A thru AP-C are also noted in the Backbox Assembly drawings on the previous page.

ASSOC. PARTS **ARE NOT INCLUDED** WITH BACKBOX/SPKR. PANEL ASSY'S.

Nº	ASSOC. BACKBOX PART NAME	QTY.	SPI PART Nº
AP-A	Backglass Assembly (Game Nº 65)	1	515-5450-00-65
ORDERING ABOVE (ITEM AP-A) ASSY. PART Nº WILL INCLUDE:			
AP-A1	Clear Backglass 25.906" X 19.187"	1	660-5038-02
AP-A2	**H.R. Casino** Film Art (Game Nº 65)	1	830-5265-00
AP-A3	Top Plastic Channel - 26"	1	545-5018-15
AP-A4	Bottom Plastic Lift Channel - 26-1/16"	1	545-5021-01
AP-A5	Plastic Edging (Left/Right) - 18-1/8"	2	545-5018-14
AP-A6*	Tape (double-sided) (12" Length) *Note: AP-A6 secures AP-A5 to AP-A1*	1/2	626-5005-00
AP-B	Pivot Hinge Left	1	535-7999-00
AP-C	Pivot Hinge Right	1	535-7999-01

Items AP-B & AP-C are secured to Backbox by: 1/4"-20 X 1-1/4" C.B. Sq. Neck (Qty. 4) (231-5003-00), 1/4"-20 Flange Nut (Qty. 4) (240-5300-00) **and** Fend Washer 1/4" I.D. X 1" O.D. (Qty. 1) (242-5009-00)
Items AP-B & AP-C are secured to Cabinet by: 1/4"-20 X 7/8" Carriage Bolt Sq. Neck (Qty. 2) (231-5014-00), Hinge Spacer (Qty. 2) (530-5099-00), Washer 1/4" I.D. X 7/8" O.D. X 1/8" Yellow (Qty. 1/per) (242-5016-01), Fend Washer 1/4" I.D. X 1" O.D. (Qty. 1/per) (242-5009-00) **and** 1/4"-20 Flange Nut (Qty. 1/per) (240-5300-00)

Cabinet - General Parts ■ & Switches □

For Backbox Parts see the previous two pages.

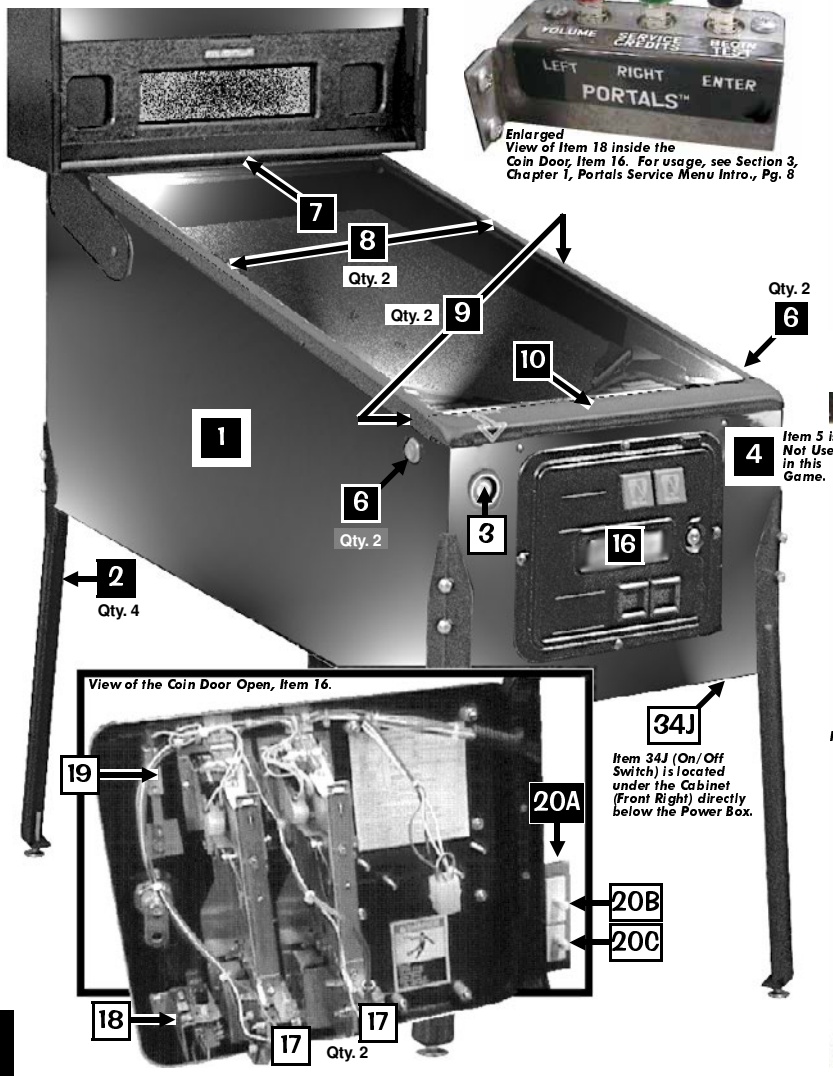

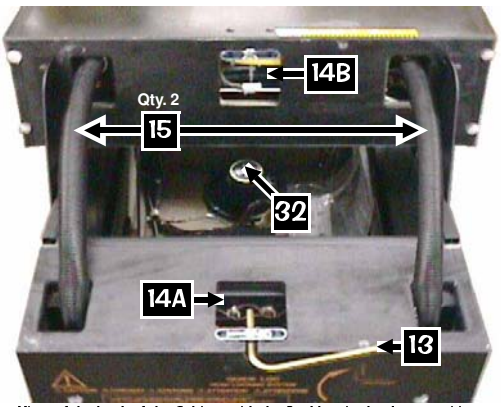

View of the back of the Cabinet with the Backbox in the down position.

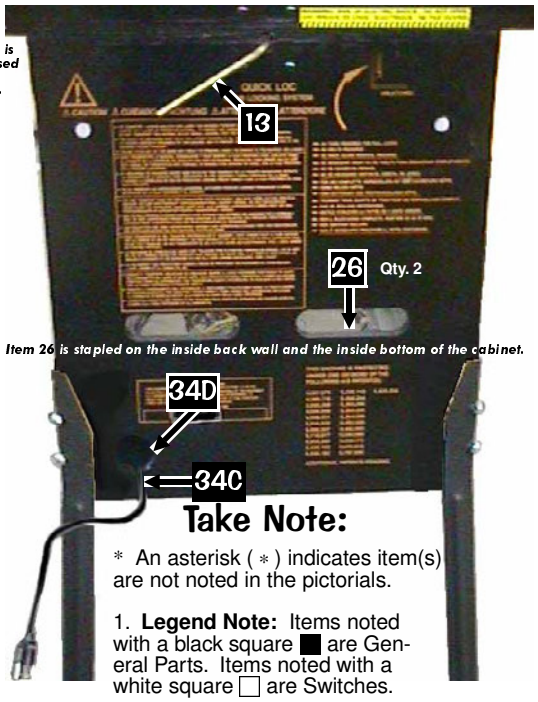

Item 26 is stapled on the inside back wall and the inside bottom of the cabinet.

Take Note:

* An asterisk (*) indicates item(s) are not noted in the pictorials.

1. **Legend Note:** Items noted with a black square ■ are General Parts. Items noted with a white square □ are Switches.

Nº	CABINET PART NAME	QTY.	SPI PART Nº
1	Game Nº 65 Screened Cabinet (Plain)	1	525-6000-65
2	Black Leg & Leveler Assembly	4	500-5921-50
	Item 2 is secured by: Leg Bolt Back Plate (535-5703-00) **and** Leg Bolt 3/8" X 16 X 2-1/2" Hex 5/8" Hd. (2/per) (231-5001-01) *To order just a Leg Leveler (3/8" - 16 X 3") use SPI Nº: 500-5017-00. A Leg "without" a Leg Leveler is not available.*		
3	Start Button Assy. (Red "Flipper" Style)	1	500-6090-02
	Item 3 includes the Switch. FOR SWITCH ONLY SEE: Next Page, Item 25.		
4	Ball Shooter (Plunger) Assembly	1	500-6146-00-04
	Item 4 is secured by: Support Plate (Qty. 1) (535-5027-00), #10-32 X 3/8" SHWH (Serr) Swage (Qty. 3) (237-5985-00) **and** #6 X 5/8" HWH AB (Zinc) (Qty. 2) (234-5002-00). **FOR A BREAKDOWN OF PARTS SEE: Sec. 4, Chp. 2, Drawings..., Page 66.**		
5	Large Rd. Auto Launch Assy. ()	0	500-6121-XX
	Item 5 includes the Switch. FOR SWITCH ONLY SEE: Next Page, Item 25. ***NOT USED***		
6	Flipper Button Assembly Red	2	500-5026-32
	Item 6 is secured by: Pal Nut for Flipper Button (Metal) (Qty. 2) (240-5003-01) **and is fitted with:** O-Ring 11/32" X 7/32" X 1/16" (Qty. 1/per) (545-5850-00) **Item 6 *DOES NOT* include the Switch. FOR SWITCHES SEE:** Next Page, Items 23A/B.		
7	Rear Glass Channel 20-3/8" Length	1	545-5038-00
8	Plastic Channel 42-5/8" Lg. (Lt. & Rt.)	2	545-5017-00
9	Side Armor "with holes" (Lt. & Rt.)	2	535-7297-02
	Item 9 is secured by: #10-24 X 1" Carriage Bolt Sq. Neck (2/per) (231-5021-00), #10-24 Hex Nut (2/per) (240-5202-00) **and** #8 X 5/8" T20 Tmp. Prf. (2/per) (237-5947-00)		
10	Front Molding - Black	1	500-5757-01-00
11*	Foam Rubber 3/8" X 3/16" X 20-3/8"	1	626-5001-00
	Above Item 11 is self-adhesive. It is located on Item 10. Sold in 12" Lengths only.		

Nº	CABINET PART NAME	QTY.	SPI PART Nº
12*	P/F Glass (Tmprd.) 21" X 43" X 3/16"	1	660-5001-00
13	Hex Key Allen Wrench 5/16"	1	777-0001-00
14A	#1 Roto Lock Male	1	355-5006-01
14B	*#1 Roto Lock Female (on Backbox)*	*1*	*355-5006-02*
	Item 14A is secured by: #10-24 X 1-3/4" Carr. Bolt Sq. Neck (Qty. 2) (231-5022-00), #10-24 Nylon Stop Nut (Qty. 2) (240-5206-00) **and** #10 Washer 7/32" X .5" X 1/16" (Qty. 2) (242-5003-00)		
15	Corrugated Tubing Black **1¼"ø X 2.6' Lg.**	2	605-5008-00
	Above Item 15 covers the Cables Wiring Harnesses going into the Backbox from the Cab.		
16	Coin Door (with Validator) USA only	1	500-5018-172
	Item 16 is secured by: 1/4"-20 X 1-1/4" Carriage Bolt Sq. Neck (Qty. 4) (231-5003-00) 1/4"-20 Flange Nut (Qty. 4) (240-5300-00) **and** Fend Washer 1/4" I.D. X 1" O.D. (Qty. 3) (242-5009-00) ***NOTE:*** *For Coin Door other than USA call Technical Support for SPI Part Nº.*		
17	Coin Door Switch (USA)	2	180-5024-00
	Coin Door Switch (¥ Japan)	n/a	180-5091-00
18	Diagnostics Service Switches (X3)	1	180-5012-03
	Item 18 is secured to Coin Door by: Diagnostics Sw. Bracket (Qty. 1) (535-6860-01)		
19	Slam Tilt Switch (On Coin Door)	1	180-5022-00
20	Dual Switch Assembly	1	500-5808-00
	ORDERING ABOVE (ITEM 20) ASSEMBLY PART Nº WILL INCLUDE:		
20A	Mounting Bracket	1	535-6958-00
20B	Playfield Power Interlock Sw. (Top)	1	180-5136-00
20C	Memory Protect Switch (Bottom)	1	180-5000-00

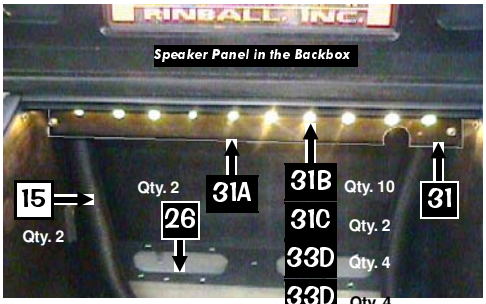

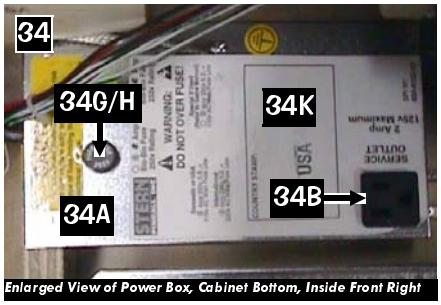

Items 39, 40 & 41 (Shaker Motor and related items) are NOT REQUIRED in this game.

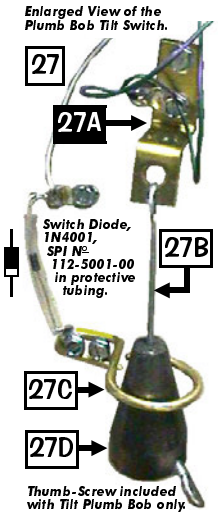

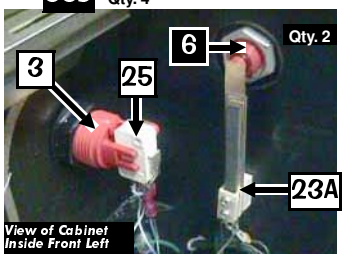

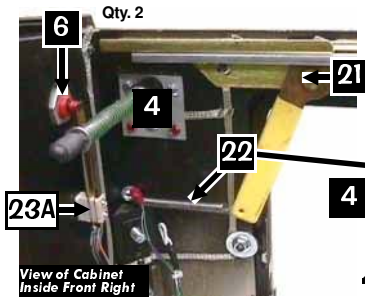

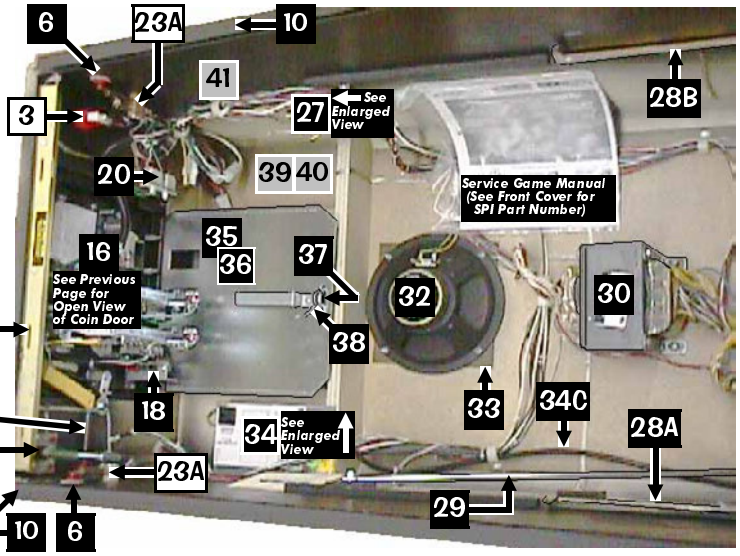

Nº	CABINET PART NAME	QTY.	SPI PART Nº
21	Front Molding Lockdown Assembly	1	500-5020-01
Item 21 is secured by: #10-24 X 1-1/4" Carr. Bolt (Qty. 2) (231-5012-00), #10-24 Keps Nut (Qty. 2) (240-5207-00), #8 X 5/8" HWH AB Zinc (Qty. 4) (234-5102-04) **and** #10 Washer 7/32" ID X 1/2" OD X 1/16" (Qty. 2) (242-5003-00)			
22	Lockdown Spring (connected to handle)	1	265-5008-00
23A	Flipper Switch - **Self-Cleaning**	2	180-5160-00
23B	Flipper Sw. - **X2 Stack for Lwr./Upr. Flipper(s)**	0	180-5164-00
24*	Foam Strip (2 on 23A; 1 on 23B)	3	626-5042-00
25	Start Button **(SWITCH ONLY)** Auto Launch Button **(SWITCH ONLY)**	1	180-5174-00
26	Grills 2-1/2" X 18" (on Back & Bottom)	2	545-5072-02
27	Cabinet Plumb Bob Tilt Switch	1	n/a
ORDER ONLY INDIVIDUAL PARTS NEEDED (NO ASSY. NUMBER):			
27A	Bracket for Hanger Wire	1	535-5221-00
27B	Hanger Wire	1	535-5319-00
27C	Contact Wire Form	1	535-7563-01
27D	Plumb Bob Weight (includes Thumb-Screw)	1	535-5029-00
Items 27A & 27C are secured by: #8 X 1/2" SHWH AB (Zinc) (Qty. 4) (234-5101-00)			
28A	Slide & Pivot Support Bracket - Right	1	535-5989-00
28B	Slide & Pivot Support Bracket - Left	1	535-5990-00
Items 28A & 28B are secured by: #10-24 X 1-1/4" Carriage Bolt Sq. Neck (3/per) (231-5012-00) **and** #10-24 KEPS Nut (3/per) (240-5207-00)			
29	Prop Rod	1	535-7553-00
Item 29 is secured by: #10-24 X 1-3/4" Carriage Bolt Sq. Neck (Qty. 1) (231-5022-00), Washer #10 7/32" ID X .5" OD X 1/16" Thk (Qty. 1) (242-5003-00) **and** #10-24 Nylon Stop Nut (Qty. 1) (240-5206-00)			
30	Transformer 5.7v AC (with Ballast Winding)	1	010-5012-01
Item 30 is secured by: 1/4"-20 X 5/8" PPH MS (Zinc) (Qty. 4) (237-5854-00) **and** 1/4" Split Lock Washer (Qty. 4) (244-5000-00)			
31	Cabinet Light Board Assembly	1	500-6413-65
ORDERING ABOVE (ITEM 31) ASSEMBLY PART Nº WILL INCLUDE:			
31A	Cab. Light Bd. Plain (Black Wood)	1	525-5570-00
31B	3-Lug Stand-Up Long Shell Socket	10	077-5013-00
31C	#44 Bulb Red (Small Bayonet Type)	2	165-5053-02
31D	#44 Bulb Amber (Small Bayonet Type)	4	165-5053-03
31E	#44 Bulb Yellow (Small Bayonet Type)	4	165-5053-06
31F*	#6 X 3/8" PPH Zinc	1/per	232-5000-00
31G	Decal Cabinet Light Board	1	820-6260-46
Item 31 is secured by: #8-32 X 1-1/2" HWH MS (Ser) Zinc (Qty. 2) (237-5946-00) **and** #8 Washer (Qty. 2) (242-5005-00)			

Nº	CABINET PART NAME	QTY.	SPI PART Nº
32	Speaker 8" ø Rd. 8010 4Ω	1	031-5007-00
33	Speaker Grill 7" X 7"	1	545-5072-03
Items 32 & 33 are secured by: #6-32 X 1-1/4" Fin Shank Screw (Qty. 4) (237-5883-00) **and** #6-32 Keps Nut (Qty. 4) (240-5008-00)			
34	Power Input Box Sub-Assy. for 2000	1	515-5360-07
ORDERING ABOVE (ITEM 34) SUB-ASSY. PART Nº WILL INCLUDE:			
34A	Power Box (Plain)	1	535-5932-00
34B	Service Outlet (for USA)	1	180-5008-01
34C	Line Cord 10' ROJ 3" Max.	1	034-5000-10
34D	Recessed Cup for Line Cord	1	545-5122-00
34E*	Line Filter	1	150-5000-00
34F*	Varistor TNR159211KM	1	150-5001-00
34G	Fuse 8 Amp 250v Slo-Blo (Domestic)	1	200-5000-05
34H	Fuse Holder	1	205-5001-00
34I*	On/Off Switch Bracket	1	535-8318-00
34J	On/Off Rocker Sw. (Arcolectric C1350AB)	1	180-5001-01
34K	Power Box Decal	1	820-6123-03
35	Cash Box Plastic Bottom	1	545-5090-00
36	Cash Box Cover (Validator)	1	535-5013-03
37	Cash Box Lock Bracket (wire)	1	535-7562-00
38	Large Hair-Pin Clip	1	535-7772-00
39*	Shaker Motor (Vibrator) Assy.	0	515-5893-**01**
ORDERING ABOVE (ITEM 39) SUB-ASSY. PART Nº WILL INCLUDE:			
39A	Shaker Motor 10.5v DC 2950 RPM CW	1	041-5029-**01**
39B	Shaker Motor Mounting Bracket	1	535-6711-**01**
39C	Shaker Motor Leg Bracket	1	535-6711-**02**
39D	Insulator	1	545-5425-00
39E	Shaker Motor Weight	2	535-6727-**01**
39F	#10-32 X 5/8" Lg. Soc. Set Screw	2	237-5911-00
39G	#8-32 X 1/4" HWH MS (Taptite)	4	237-5964-01
39H*	Capacitor - Tecate .1 MFD 500v	1	130-5000-00
39I	M5X.8X8MM PHMS w/Patch	4	237-6014-00
Item 39 secured by: #8-32 T-Nut (Qty. 4) (240-5101-00) **and** #8 X 5/8" HWH SWAGE (Ser) Zinc (Qty. 4) (237-5975-03)			
40	Shaker Motor Plastic Cover Housing	0	545-5241-00
Item 40 secured to Item 39B by: #8-32 X 3/8" HWH MS (Taptite) (Qty. 2) (237-5967-00)			
41	Shaker Motor P.C. Board	0	520-5065-00
Item 41 secured by: 3/8" Slf. Rtn. Spacer White (Qty. 4) (254-5007-01) **and** #6 X 3/4" HWH AB (Zinc) (Qty. 4) (234-5003-00)			

Playfield - General Parts ■ & Switches □ (Below)

№	BELOW PLAYFIELD PART NAME	QTY.	SPI PART №
1	Playfield Support Slide Bracket	2	535-6862-02
Item 1 is secured by: #8 X 1/2" SHWH AB (Zinc) (Qty. 2/per) (234-5101-00) **and** #8-32 X 5/8" HWH Swage (Serr) Zinc (Qty. 1/per) (237-5975-03)			
2	Edge Slide Bracket	2	535-5988-00
Item 2 is secured by: #4 X 1/2" PFH (Zinc) (Qty. 3/per) (237-5840-00)			
3	Pivot Pin Bracket Welded Assy. 2000	2	500-5329-03
Item 3 is secured by: #8-32 X 5/8" HWH Swage (Serr) Zinc (Qty. 1/per) (237-5975-03) #8-32 X 1" PFH (Zinc) (Qty. 1/per) (237-6029-00) **&** #8-32 NS Nut (Qty. 1/per) (240-5102-00)			
4	Diode Terminal Strip 2-Lug (810) Isolated	2	055-5203-00
5	Diode Terminal Strip 3-Lug (813) Isolated	3	055-5204-03
6	Diode Terminal Strip 5-Lug (824) Isolated	2	055-5204-05
7	Diode Terminal Strip 7-Lug Isolated	1	055-5204-07
Items 4, 5, 6 & 7 are secured by: #6 X 3/8 HWH AB Zinc (Qty. 1-2/per) (234-5000-00). ***NOTE:*** *1N4004 Diodes (112-5003-00) are used in all Diode applications. 1N4001 Diodes can be used for Switches and/or Lamps. See Sec. 5, Chp. 2, Playfield Diode Terminal Strip...*			
8	3A 250v Slo-Blo Fuse	3	200-5000-08
	Fuse Clip Holder (Socket)		205-5000-01
Item 8, Fuse Clip Holder (Socket) 205-5000-01 is part of a set of 12 (205-5000-12). You can order them as individuals (...-01) or a set of 12 (...-12). **Item 8 is secured by:** #6 X 1/2" PPH AB (Qty. 1/per) (237-5805-00)			
9*	#8 Solder Lug	5	055-5140-08
Item 9 is secured by: #6 X 3/8" HWH AB (Zinc) Red (Qty. 1/per) (234-5000-00)			

№	BELOW SWITCHES PART NAME	QTY.	SPI PART №
A	Micro **(Shooter Lane)** Sw. Assembly	1	500-5498-01
Item A is secured by: #6 X 1/2" HWH AB (Zinc) Red (Qty. 2) (234-5001-02) ***For Individual Items use :*** Micro Switch (**180-5100-01**), Switch Body Protect Plate (**535-6539-00**), Diode (1N4004) (**112-5003-00**), Switch Bracket (**535-6173**), #2-56 X 1/2" HWH (**237-5937-02**) or #2-56 Hex Nut (**240-5301-00**).			
B	Micro Sw. Assy. R/O Lt. Mount Reg.	0	500-6227-01
C	Micro Sw. Assy. R/O Rt. Mount Reg.	6	500-6227-02
Items B & C are secured by: #6 X 1/2" HWH AB (Zinc) Red (Qty. 2/per) (234-5001-02)			
D	Modular S-U Target Round (Clear)	1	500-6075-01**R**
E	Modular S-U Target Square (Clear)	2	500-6139-01
F	Modular S-U Target Square (Red)	1	500-6139-02
G	Modular S-U Target Rect. (Green)	1	500-6228-04
H	Modular S-U Target Narrow (Red)	1	500-6138-02
I	Modular S-U Trgt. 1" Sperical (Clear)	3	500-6189-01**R**
Items D - I are secured by: #8 X 3/4" HWH AB (Zinc) (Qty. 2/per) (234-5103-00) ***NOTE:*** *For Items **D - I**, Part Numbers ending with "**R**" are "**Reverse Mount Style**"; See **Appendix I**.*			
J	Micro Switch (on Turbo (Pop) Bumper)	3	180-5015-03
K	Stack **(Blade)** Sw. (on each Slingshot X2)	8	180-5054-00
L	Micro Roller Sw. (on Ball Trough & Slot Rmp.)	5	180-5119-02
M	Micro Switch (on Drop Targets)	4	180-5158-00
N	EOS Switch (on Flippers)	2	180-5149-00
O	Dual OPTO TRANS Bd. (on Ball Trough)	1	520-5173-00
	Dual OPTO REC Board (on Ball Trough)		520-5174-00
P	Long Hop OPTO TRANS Bd. (on Brkt.)	1	520-5082-00
	Long Hop OPTO REC Board (on Brkt.)		520-5083-01
Q	4-Pos. OPTO Board (inside Roulette Asm.)	1	520-5194-01
	Micro **(Hi-Form)** Sw. (on Under-Trough)	0	180-5057-00
	Micro Switch (on Super VUK)	0	180-5052-00
	Micro **(Heavy Duty "Y")** Switch (on VUK)	0	180-5116-01
Items J thru P are on Major Assemblies: For securing hardware of Switches J-P, see the assemblies the switch is located on in the **Blue Pages**, **Section 4**, **Chapter 2**.			

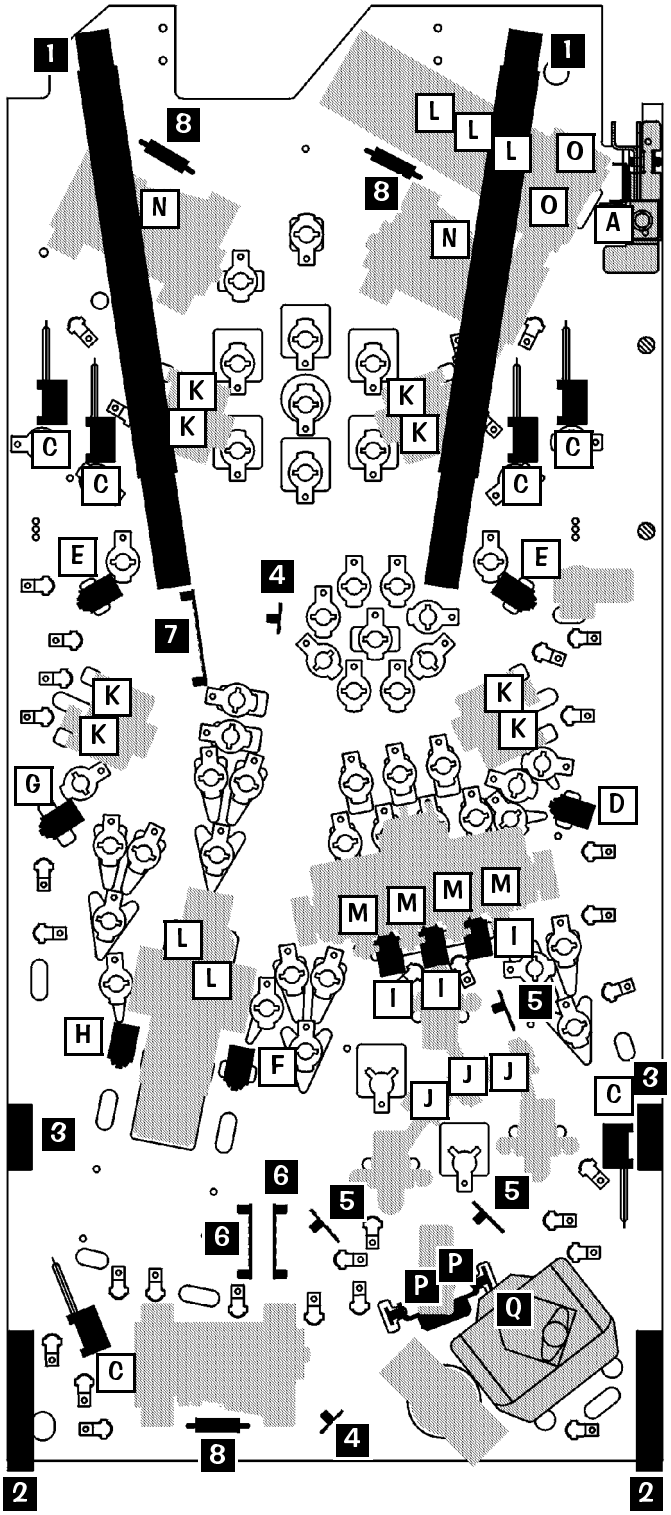

Take Note:

* An asterisk (*) indicates item(s) are not noted in the pictorials.

1. For Sockets & Bulbs (drawings & part numbers) see Pgs. 62-64.
2. For Major Assemblies, Ramps and/or Under Troughs, **see the Blue Pages, Sec. 4, Chp. 2**.
3. **Legend Note:** Items noted with a black square ■ are General Parts. Items noted with a white square □ are Switches or OPTO Boards, or Misc. PC Boards.

Playfield - General Parts ■ & Switches □ (Above)

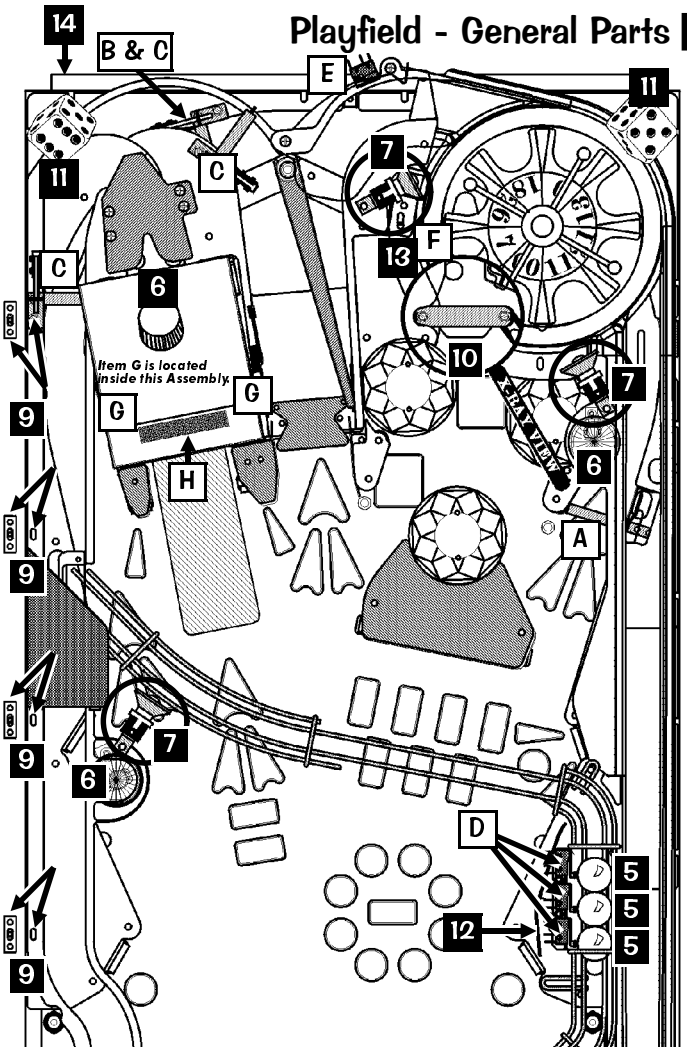

Take Note:

* An asterisk (∗) indicates item(s) are not noted in the pictorials.

1. Some unique parts *may be included with* **or** *associated with* a Major Assembly or Ramp Assembly; **see the Blue Pages, Sec. 4, Chp. 2**. for parts required not appearing on this page. If you still cannot find the part required, Call Stern™ Pinball Technical Support, 1-800-542-5377 or 1-708-345-7700.
2. **Legend Note:** Items noted with a black square ■ are General Parts. Items noted with a white square □ are Switches.

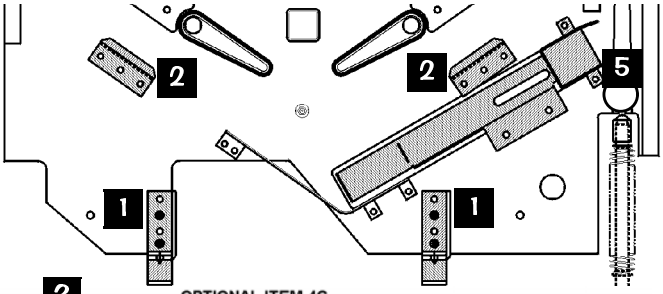

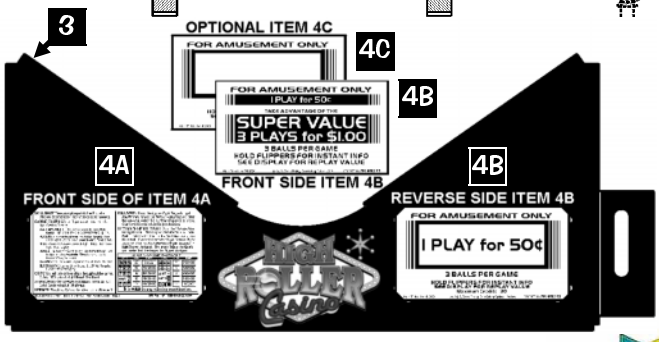

Nº	ABOVE PLAYFIELD PART NAME	QTY.	SPI PART Nº
n/a ∗	P/F Screened **w**/ Inserts & **NO** Parts	1	830-5100-65
	P/F Complete **w**/ Inserts & **ALL** Parts		505-6004-65-65
1	Playfield Hanger Bracket	2	535-8385-00
Item 1 is secured to the P/F by: #8-32 X 7/8" HWH MS Zinc (Qty. 2/per) (237-5890-00)			
2	Arch Retaining (Hold-Down) Brackets	2	535-8394-00
Item 2 is secured to the playfield by: #8 X 1/2" SHWH AB (Zc.) (Qty. 3/per) (234-5101-00)			
3	Arch Assembly (Metal) (Plunger Ready)	1	500-6005-01
Item 3 is secured to the playfield by: #10-32 X 5/16" PH Zinc (Qty. 2) (237-6013-00). ***For Arch (w/o Fork, required for games with plungers) Plain :*** use 535-8392-01. ***For Nelson Protect Strips 8-9/16" :*** use 545-5212-02 (Qty. 2) *(Note: Decals are not included with the above. See Playfield - Plastic, Decals & Mylar.)*			
4A	Instruction Card (USA) Nº: 65	1	755-5165-00
4B	Coin Card (Double-Sided)	1	755-5087-01
4C	*OPTIONAL* Coin Card ("Blank")	0	755-5087-02
Note: *Use Item 4B (**Side 1: 1 Play 50¢ 3 Plays $1**) for Adj. 7, Game Pricing, USA 8 Setting; Use Item 4B (**Side 2: 1 Play 50¢**) for USA 3 Setting. Use Item 4C OPTIONAL (**Blank**) for Custom Settings (**not included** in USA Games or Foreign Games w/own Country Coin Card; Item 4C can be purchased, call your Distributor).*			
5	1-1/16" Steel Balls	4	260-5000-00
6	Mini-Mars Light Cover (Snap-In) Red	4	550-5030-02
7	Light Deflector (Silver Plastic)	3	545-5409-01
Note: *For #555 Socket & Bulb, see Page 64 (Items D & 1).*			
8∗	Plug-Cap (3/16") Black Plastic	1	545-5232-01
Note: *Use Item 8 (in the Spare Parts Bag) if the Center Post (@ Drain) is not desired.*			
9	Ramp Mounting Welded Bracket	4	515-6508-00
Item 9 is secured on Wood Rail: #6 X 1/2" PTH A (Zinc) (Qty. 2/per) (237-5809-00)			
10	1-Way Gate Mounting Bracket	1	535-5269-02
	Wire Gate (for above)		535-5307-02
11	"Die" Foam Rubber (stops ball traps)	2	880-5048-00
Item 11 is secured to Cabinet by: #8 X 3" PFH Dry Wall (Black) (Qty. 1/per) (237-6032-00)			
12	Sign Bracket	1	535-8766-00
Item 12 is secured to Screen Plastic -12 by: #6 X 3/8" PPH (Zinc) (Qty. 2) (232-5000-00) **and is secured to Screen Plastic -19 by:** 1/8" X 3/16" (Qty. 1) (249-5001-00).			
13	Switch Bracket	1	535-8770-00
Item 13 is secured to the plastic by: #6 X 1/2" PTH A (Zinc) (Qty. 2) (237-5809-00) ***Note: Item 13 is secured to Clear Plastic -05 and is used to position the Micro Switch (180-5175-00) in the Roulette Ramp Ball Path.***			
14	Back Panel H.R. Casino (No Parts)	1	525-5577-00
Item 14 is secured by: #6 X 1-1/4" PFH A (Zinc) (Qty. 4) (234-5000-00), #6 X 3/4" HWH AB (ZInc) (Qty. 4) (234-5003-00) **and** #6 Washer (Qty. 4) (242-5001-00)			

Nº	ABOVE SWITCHES PART NAME	QTY.	SPI PART Nº
A	Spinner & Switch Assembly	1	500-5656-00
Item A is secured by: #8 X 1/2" SHWH AB (Zinc) (Qty. 1) (234-5101-00) ***For Individual Items use :*** Micro Switch (1-1/4") (**180-5010-04**), Switch Body Protect Plate (**535-6539-00**), Diode (1N4004) (**112-5003-00**), Spinner Bracket (**535-5128-00**), Spinner Sub-Assy. (**515-5553-00**), or #2-56 X 1/2" HWH (**237-5937-02**).			
B	Gate & Switch Assembly	1	515-6556-02
Item B is secured by: #6 X 1/2" PTH A (Zinc) (Qty. 4) (237-5809-00) ***For Individual Items use :*** Micro Switch (**180-5087-00**), Switch Body Protect Plate (**535-6539-00**), Diode (1N4004) (**112-5003-00**), Gate Bracket (**535-7756-02**), Wire Form for Gate Bracket (**535-7755-02**), or #2-56 X 1/2" HWH (**237-5937-02**).			
C	Micro Switch (on Gates)	3	180-5087-00
D	Micro Switch Roller (on Wire Ramp)	3	180-5119-02
E	Micro Switch (on Plastic Left Ramp)	1	180-5093-00
F	Micro Switch (on Switch Brkt. Item 13 above)	1	180-5175-00

Nº	MISC. PCB PART NAME	QTY.	SPI PART Nº
G	3-Pos. OPTO Bd. REC (in Slot Machine)	1	520-5196-00
	3-Pos. OPTO Bd. TRANS (in Slot Mach.)	1	520-5195-00
H	5X7 Dot Display X3 Bd. (inside Slot Mach.)		520-5197-00

Playfield - Rubber Parts ☐ (Rings Actual Size) †

1 3" I.D.
2 2¾" I.D.
3 2½" I.D.

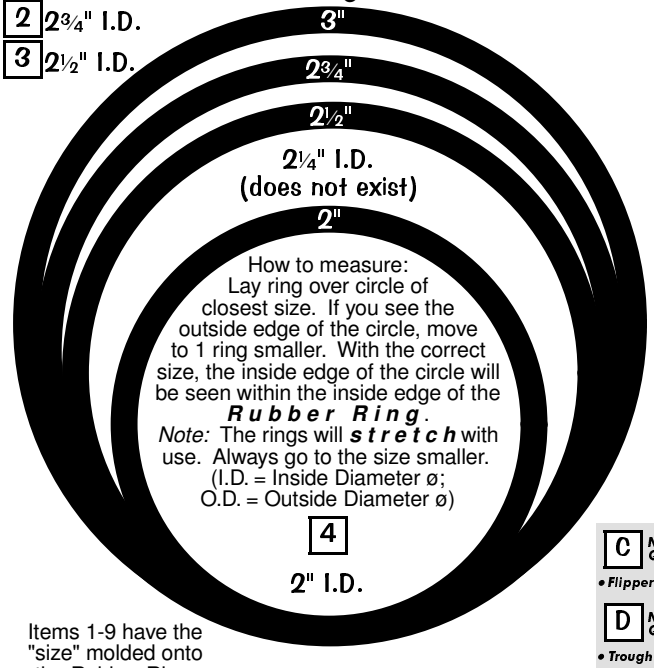

Items 1-9 have the "size" molded onto the Rubber Ring.

C Not Shown: Qty. 2
• Flipper Assemblies

D Not Shown: Qty. 1
• Trough Up-Kicker

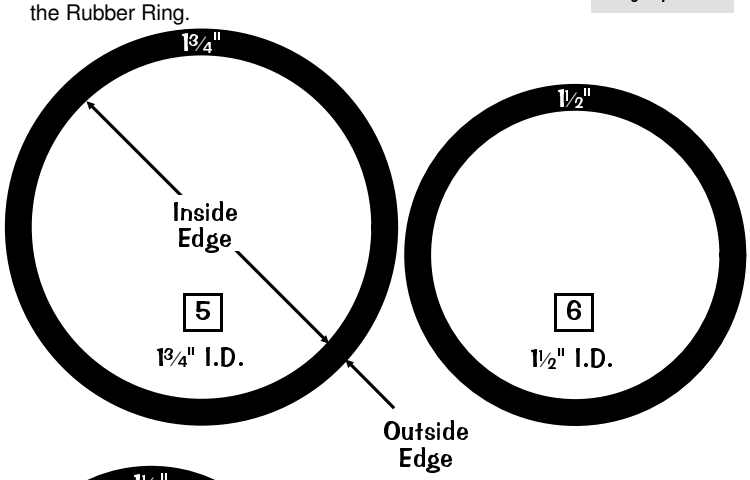

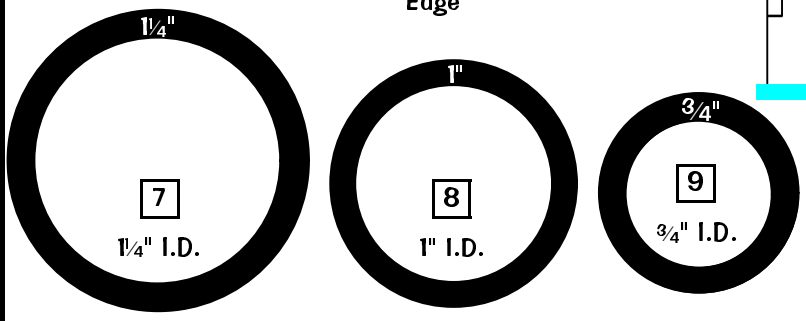

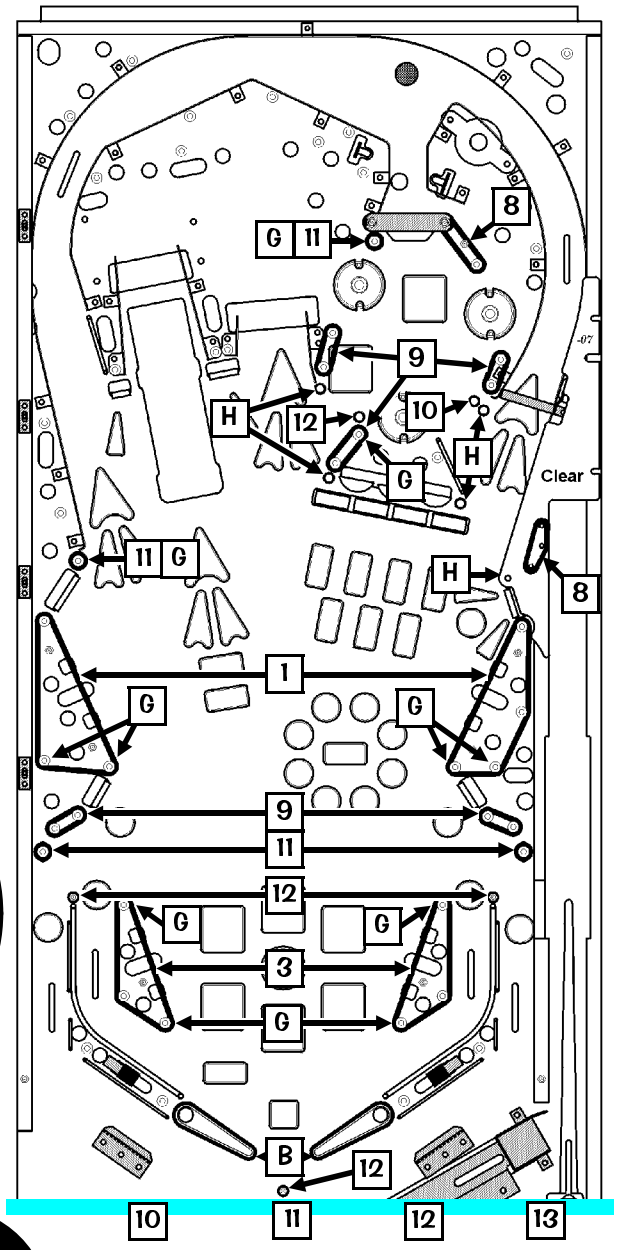

№	ABOVE PLAYFIELD PART NAME	QTY.	SPI PART №	№	ABOVE PLAYFIELD PART NAME	QTY.	SPI PART №
A	Small Flipper Rubber Ring	0	545-5207-00	4	2" I.D. Black Rubber Ring	0	545-5348-08
B	Large Flipper Black Rubber Ring	2	545-5277-00	5	1¾" I.D. Black Rubber Ring	0	545-5348-21
C*	Rubber Deflector Pad (Bumper)	2	545-5428-00	6	1½" I.D. Black Rubber Ring	0	545-5348-07
D*	Rubber Bumper (Grommet)	1	545-5105-00	7	1¼" I.D. Black Rubber Ring	0	545-5348-06
E	Bumper Post Rubber	0	545-5009-00	8	1" I.D. Black Rubber Ring	2	545-5348-05
F*	Rubber Flange Bumper (on Left Ramp)	1	545-5965-00	9	¾" I.D. Black Rubber Ring	5	545-5348-04
G	Post Rubber (Sleeve Short)	11	545-5151-00	10	5/16" I.D. Black Rubber Ring	1	545-5348-02
H	Post Black Rubber (Sleeve Tall)	5	545-5308-00	11	3/16" I.D. Black Rubber Ring	5	545-5348-01
1	3" I.D. BLK Rubber Ring	2	545-5348-10	12	7/16" O.D. Black Rubber Ring	4	545-5348-17
2	2¾" I.D. Black Rubber Ring	0	545-5348-20	13	⅜" O.D. Black Rubber Ring	0	545-5348-19
3	2½" I.D. Black Rubber Ring	2	545-5348-09	14*	O-Ring 11/32" X 7/32" X 1/16"	2	545-5850-00

Playfield - Plastics (Screened ■ & Clear □), Metal Covers ■, Mylar* & Decals*

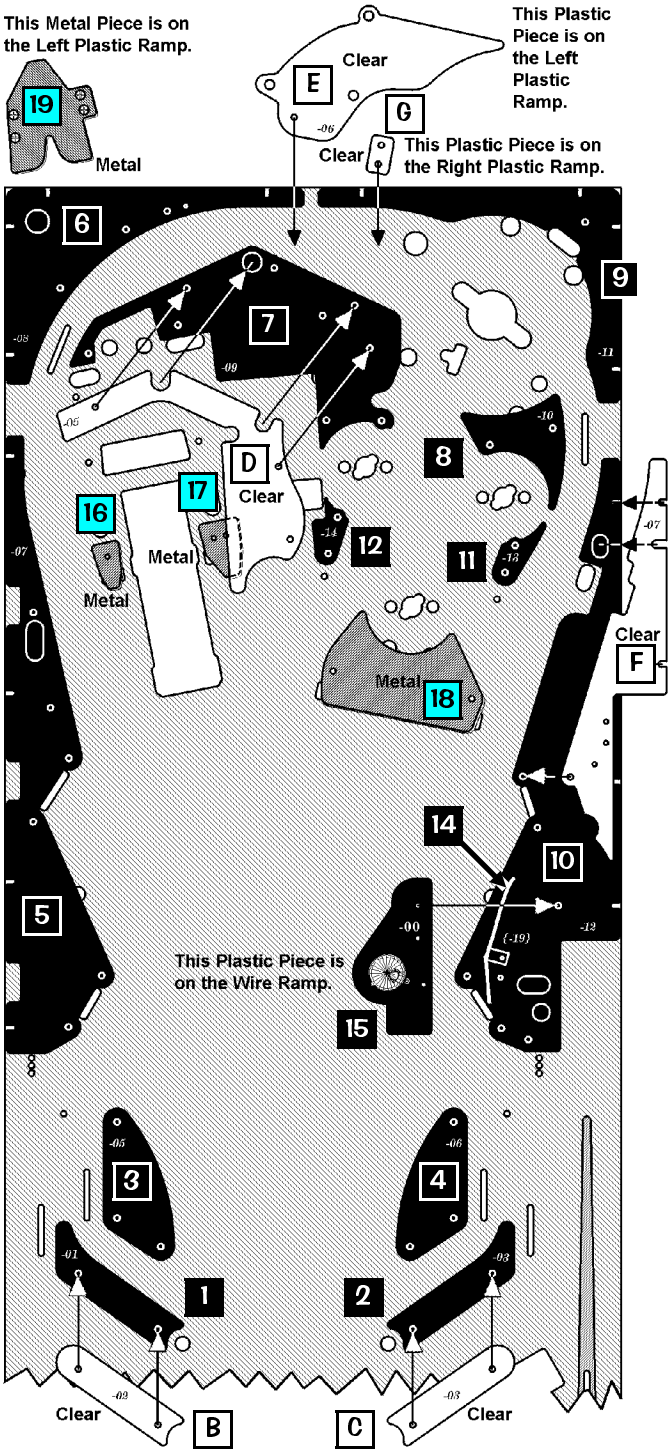

Nº	SCREENED PLASTIC PART NAME	QTY.	SPI PART Nº
Attention: *Individual Pieces may not be available. Pieces -02, -04, -15, -16 & -17 are* ***Not Used****.*			**830-5973-XX**
1	Left Return Lane	1	830-5973-01
2	Right Return Lane	1	830-5973-03
3	Lower Left Slingshot	1	830-5973-05
4	Lower Right Slingshot	1	830-5973-06
5	Left Side Playfield	1	830-5973-07
6	Top Left Corner	1	830-5973-08
7	Inner Loop Left	1	830-5973-09
8	Inner Loop Right	1	830-5973-10
9	Top Right Corner	1	830-5973-11
10	Right Side Playfield	1	830-5973-12
11	Right Pop Bumper	1	830-5973-13
12	Left Pop Bumper	1	830-5973-14
13*	Key Chain FOB	1	830-5973-18
14	Ball Shield **(above "-12", Item 10)**	1	830-5973-19

Note: *Item 14 is riveted (1/8" X 3/16", Qty. 1, 249-5001-00) to a Sign Bracket (535-8766-00). To replace, drill out rivet and resecure new piece with another same type rivet or screw & nut.*

15	Wire Ramp Switch Cover	1	**830-5981-00**

Note: *Item 15 is not included with the Plastic Sheet Set 830-5973-XX. This item must be ordered separately.*

Nº	METAL COVER PART NAME	QTY.	SPI PART Nº
16	Metal Cover Plate (Small)	1	535-8759-00
17	Metal Cover Plate (Medium)	1	535-8760-00
18	Metal Cover Plate (Large)	1	535-8761-00
19	Metal Cvr. Plate (Ramp Ball Protect)	1	535-8758-00

Nº	CLEAR PLASTIC PART NAME	QTY.	SPI PART Nº
Attention: *Individual Pieces may not be available. Pieces -01 & -04 are* ***Not Used****.*			**830-5979-XX**
A*	Value Wheel (In Backbox) (Black)	1	830-5979-00
B	Left Return Lane **(above "-01" Item 1)**	1	830-5979-02
C	Right Return Lane **(above "-03", Item 2)**	1	830-5979-03
D	Under Ramps **(above "-09", Item 7)**	1	830-5979-05
E	Rt. Ramp Cover **(attached to Lt. Ramp)**	1	830-5979-06
F	Under Rt. Ramp **(above "-12", Item 10)**	1	830-5979-07
G	Sm. Cover On Roulette Ramp	1	830-5979-08

Nº	MYLAR PART NAME	QTY.	SPI PART Nº
M1*	Clear - Playfield Pieces (Casino)	1	**820-5878-XX**
M2*	Clear - Slingshot Front Protect	2	820-5821-00
M3*	Clear - Square Ball Drop	3	820-5815-00
M4*	Black Mylar - Cover Discs **(in Cabinet)**	2	820-5041-00

Nº	GAME DECAL PART NAME	SPI PART Nº
D1*	Game Nº 65 Screened Decal Sheet Set	**820-6260-XX**

Note: Individual pieces are not available*, thus entire sheet set must be ordered.*
-01: Bottom Arch Left; **-02:** Bottom Arch Right; **-03:** Bottom Arch Center; **-04:** Arch Shooter; **-05:** Coin Door Front; **-06:** Install 4 Balls; **-07:** Portals Coin Door; **-08:** Flipper Right; **-09:** Flipper Left; **-10:** Technical Support...; **-11:** Upr. Rt. Target; **-12:** Lwr. Rt. Target; **-13:** Lwr. Lt. Target; **-14:** Slot Rt. Target; **-15:** Slot Lt. Target; **-16:** Spnr. Frnt; **-17:** Spnr Back; **-18:** Upr. Lt. Target; **-19:** Pop Top; **-20:** Pop Top; **-21:** Pop Top; **-22:** 4-Bank #1; **-23:** 4-Bank #2; **-24:** 4-Bank #3; **-25:** 4-Bank #4; **-26:** Diverter Top; **-27:** Diverter Side; **-28:** Diverter Side; **-29:** Cover Plate; **-30:** Cover Plate (Over Target Bank): **-31:** Cover Plastic Ramp; **-32:** Slot Machine (S.M.) Front; **-33:** S.M. Button #1; **-34:** S.M. Button #2; **-35:** S.M. Button #3; **-36:** S.M. Button #4; **-37:** S.M. Button #5; **-38:** Shooter Ramp (S.R.) Flange; **-39:** S.R. Light; **-40:** S.R. Roulette Flange; **-41:** Main Ramp Light; **-42:** Back Panel; **-43:** Up-Post (UK Only); **-44:** Roulette Center; **-45:** Diverter Center Ramp; **-46:** Cabinet Light Strip

D2*	Ramp Decal	820-6281-00
D3*	Diode Terminal Strip Desc. Decals	820-6221-65

See Sec. 5, Chapter 2, Playfield Wiring, Page 95 for more details.

D4*	Game Specific Backbox Fuse Locations	820-6152-73

Take Note:

* An asterisk (*) indicates item(s) are not noted in the pictorials.

1. To order the entire Plastic Sheet Set (Screened & Clear), use the Part Nº with the "-XX" ending. For individual pieces replace the "-XX" with appropriate last 2-Digit Nº.
   Attention: Individual pieces are not be available.
2. **Legend Note:** Items noted with a black square ■ are Screened; ...a white square □ are © Clear; ...a gray square ■ are Metal.

GENERIC DECAL PART NAME (with SPI PART Nº)
Power Box (**820-6223-00**),
Protective Earth (**820-6224-00**),
Generic Backbox Fuse Loc. (**820-6152-00**),
Suitable ...Use... (UL) (**820-6001-01**),
Canadian UL Listing Label (**820-6141-01**),
High Voltage Label (UL) (**820-6082-01**),
Shock Hazard Label (UL) (**820-6263-00**)

Playfield - Rails ■, Wire Forms □ and Ball Guides □ †

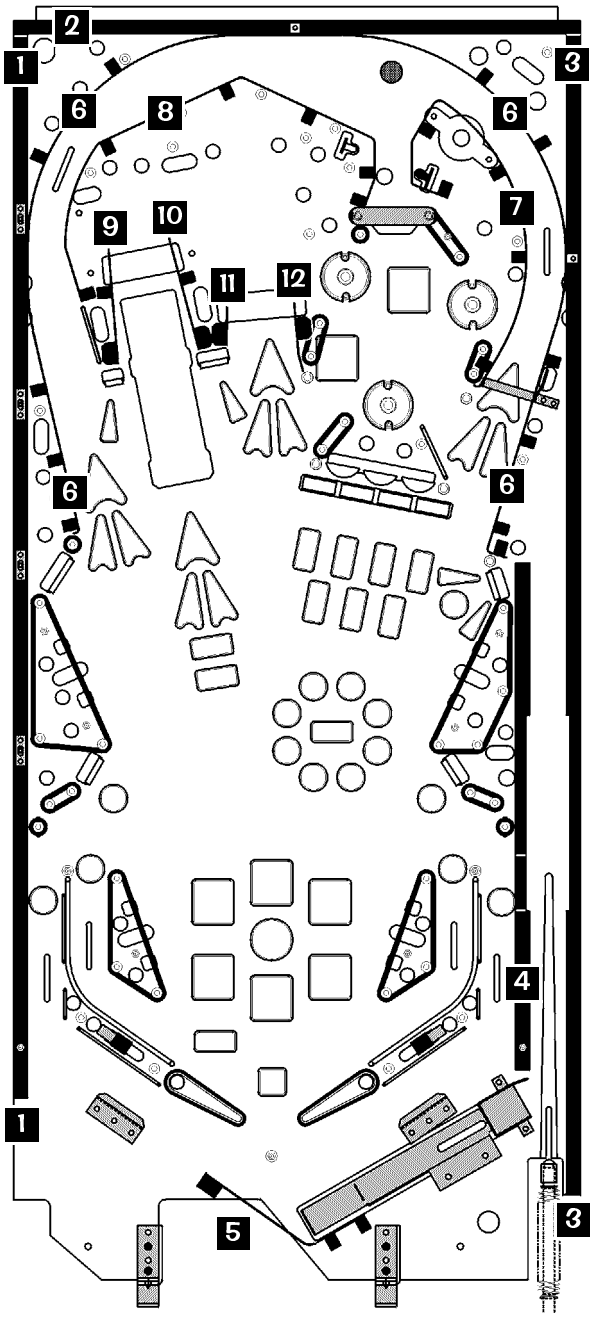

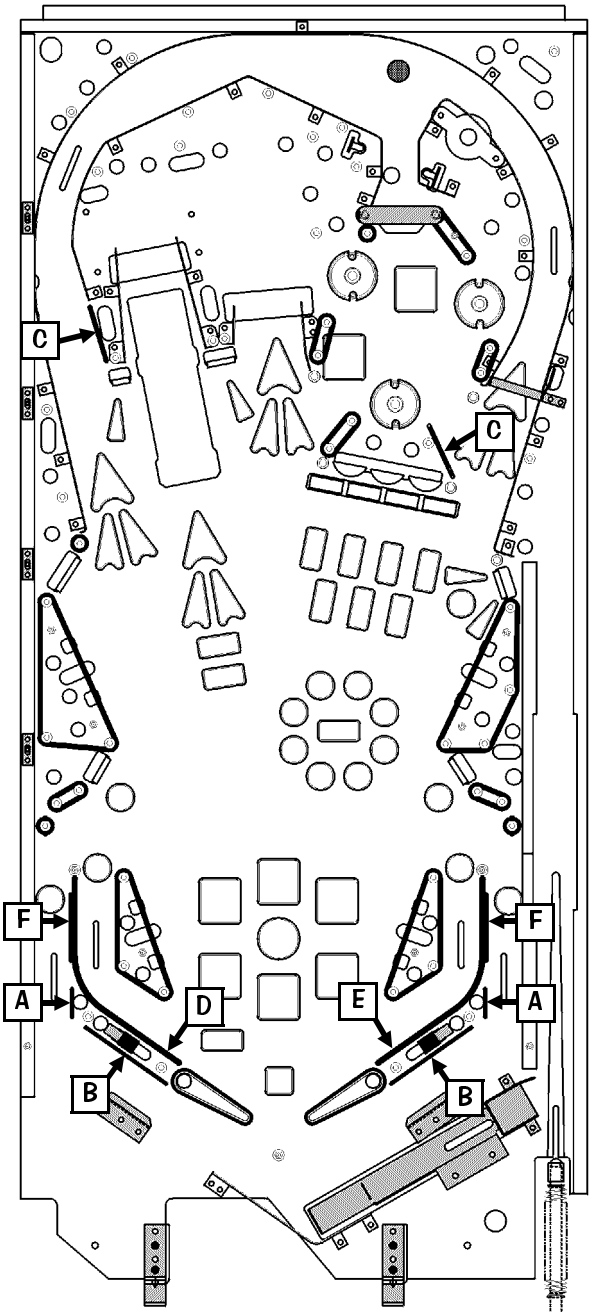

№	WOOD RAIL PART NAME	QTY.	SPI PART №
1	Wood Rail (38")	1	525-5007-03
2	Wood Rail (20.25")	1	525-5007-05
3	Wood Rail (Right Side)	1	525-5571-00
4	Wood Rail (Middle)	1	525-5572-00

Items 1-4 are secured by: #6 X 1-1/4" PFH A (Zinc) (Qty. 4/per) (237-5804-00)

№	METAL RAIL PART NAME	QTY.	SPI PART №
5	Metal Rail (Center Drain Under Arch)	1	535-8393-00

Item 5 is secured by: #8 X 1/2" SHWH AB (Zinc) (Qty. 4) (234-5101-00)

6	Metal Rail (Outer Loop)	1	535-8616-00

Item 6 is secured by: #8 X 1/2" SHWH AB (Zinc) (Qty. 11) (234-5101-00) **and** #6 X 1/2" PTH A (Zinc) (Qty. 2) (237-5809-00)

7	Metal Rail (Inner Loop Right)	1	535-8617-00

Item 7 is secured by: #8 X 1/2" SHWH AB (Zinc) (Qty. 5) (234-5101-00)

8	Metal Rail (Inner Loop Left)	1	535-8618-00

Item 8 is secured by: #8 X 1/2" SHWH AB (Zinc) (Qty. 6) (234-5101-00)

№	METAL RAIL PART NAME cont.	QTY.	SPI PART №
9	Metal Rail (@ Lt. Ramp Enter Lt.)	1	535-8749-00
10	Metal Rail (@ Lt. Ramp Enter Rt.)	1	535-8749-01
11	Metal Rail (@ Mid. Ramp Enter Lt.)	1	535-8750-00
12	Metal Rail (@ Mid. Ramp Enter Rt.)	1	535-8751-00

Items 9-12 are secured by: #8 X 1/2" SHWH AB (Zinc) (Qty. 1/2) (234-5101-00) **and**
Item 12 requires additional: #6-32 X 1/2" SHWH Swage (Serr) Zinc (Qty. 1) (237-5976-03)

№	WIRE FORM PART NAME	QTY.	SPI PART №
A	Wire Form - 1"	2	535-5300-05
B	Wire Form - 3-1/2"	2	535-5300-03

№	BALL GUIDE RAIL PART NAME	QTY.	SPI PART №
F	Ball Guide Rail (2")	2	535-5356-01
J	Ball Guide Rail (Left Return)	1	535-7560-00
K	Ball Guide Rail (Right Return)	1	535-7560-01
L	Ball Guide Rail (Outlane Fence)	2	535-7595-00

† Items with Ø Qty. are not used in this game.
Size and/or quantities may change during production.

Playfield - Metal Posts (Screws) and Nuts (Actual Size) †

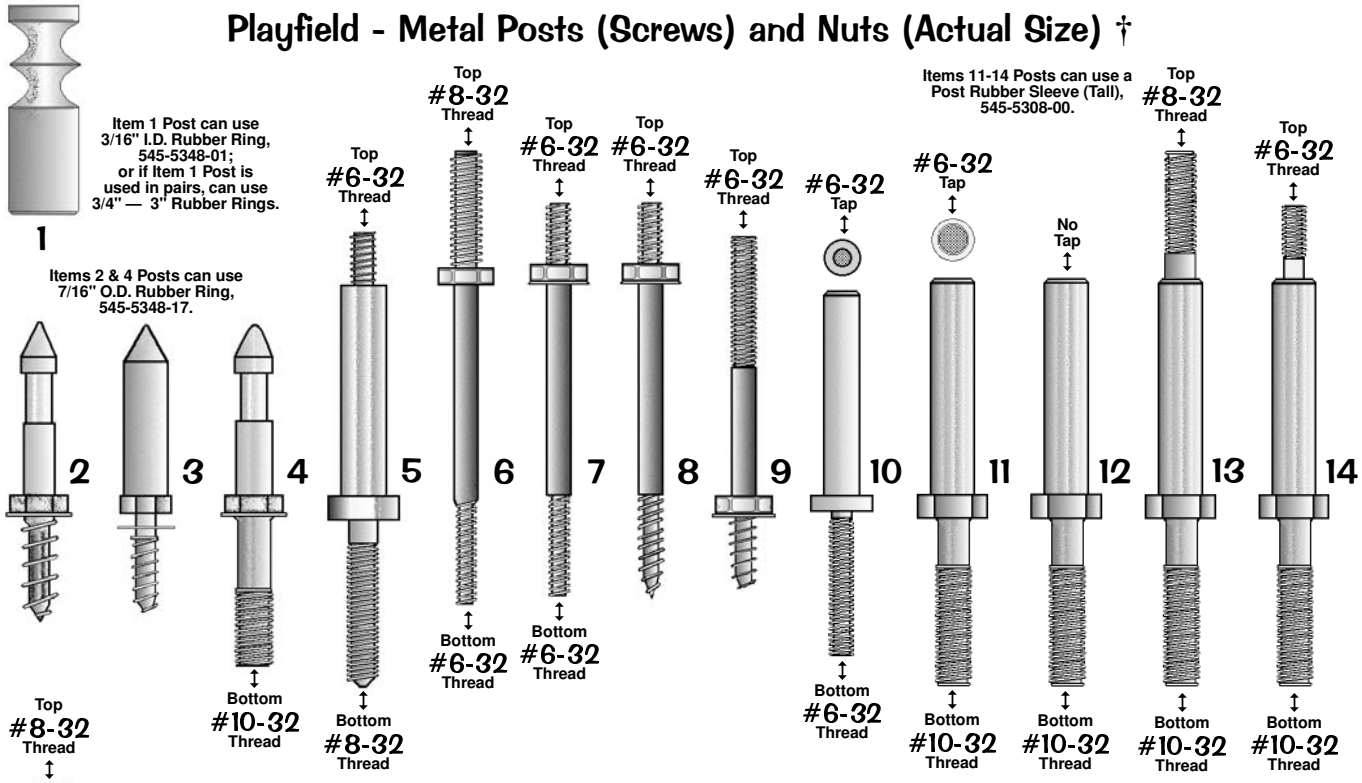

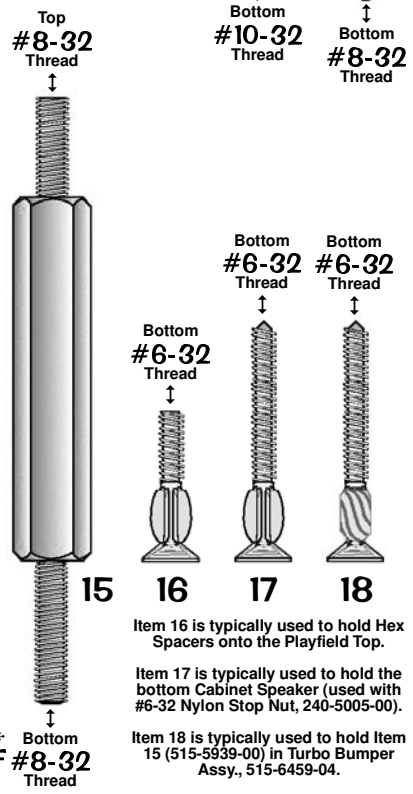

Item 16 is typically used to hold Hex Spacers onto the Playfield Top.

Item 17 is typically used to hold the bottom Cabinet Speaker (used with #6-32 Nylon Stop Nut, 240-5005-00).

Item 18 is typically used to hold Item 15 (515-5939-00) in Turbo Bumper Assy., 515-6459-04.

Note: The "Fins" keep the screw from turning inside the wood hole.

Nut Note: All nuts shown with a " ✔ " are used in this game. The quantities (not specified) vary. The remaining Items listed are not used in this game and are noted for reference only (used in prior games).

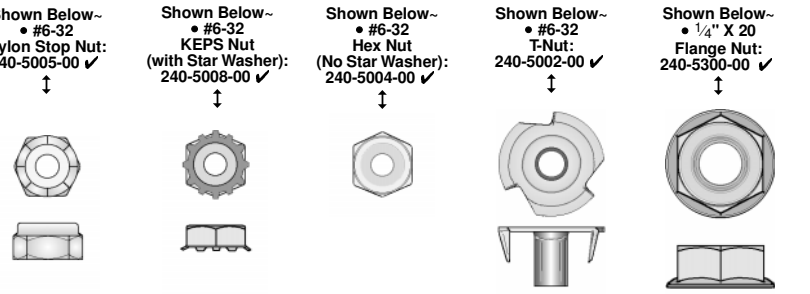

Shown Below~ • #6-32 Nylon Stop Nut: 240-5005-00 ✔

Top & Side Views

Nylon Stop Nuts *Not Shown:*

- #6-32 (w/ 1/4" Hex Body): 240-5010-00 ✔
- #8-32: 240-5102-00 ✔
- #10-32: 240-5203-00 ✔
- #10-24: 240-5206-00 ✔
- #4-40: 240-5303-00 ✔
- #4-40 (18/8 Stainless): 240-5303-01
- 5/16"-18: 240-5316-00

Shown Below~ • #6-32 KEPS Nut (with Star Washer): 240-5008-00 ✔

Bottom & Side Views

KEPS Nuts *Not Shown:*

- #6-32 (w/ 1/4" Hex Body): 240-5011-00
- #8-32: 240-5104-00
- #10-32: 240-5208-00 ✔
- #10-24: 240-5207-00 ✔
- #4-40: 240-5318-00

Shown Below~ • #6-32 Hex Nut (No Star Washer): 240-5004-00 ✔

Top View

Hex Nuts *Not Shown:*

- #8-32: 240-5103-00
- #10-32: 240-5201-00
- #10-24: 240-5202-00 ✔
- #10-32 X 3/8": 240-5209-00
- 3/4-16: 240-5315-00 ✔
- #2-56: 240-5301-00 ✔
- 7/8"-14: 240-5317-00

Shown Below~ • #6-32 T-Nut: 240-5002-00 ✔

Bottom & Side Views

T-Nuts *Not Shown:*

- #6-32 (w/Side Cut Off): 240-5002-01
- #8-32: 240-5101-00 ✔
- #10-32 (Black Oxide): 240-5007-00
- #10-32 (w/Side Cut Off): 240-5205-00
- #10-24: 240-5200-00

Shown Below~ • 1/4" X 20 Flange Nut: 240-5300-00 ✔

Top & Side Views

Miscellaneous Nuts *Not Shown:*

- Plastic Pal Nut (on Flipper Buttons): 240-5003-00
- Metal Pal Nut (on Flipper Buttons): 240-5003-01 ✔
- #6-32 Wing Nut: 240-5001-00
- #8-32 Wing Nut: 240-5100-00
- 1/4"-20 Wing Nut: 240-5302-00
- 1/4"-20 Toggle Wing: 240-5324-00

№	METAL POST NAME	QTY.	SPI PART №	№	METAL POST NAME	QTY.	SPI PART №
1	Stand-Off Double Groove Post 1-1/16"	0	530-5102-01	10	Post #6-32 Tap / #6-32 Bottom	0	530-5127-00
2	Mini-Post Wood Screw	0	530-5004-00	11	Post Hex Base #6-32 Tap/#10-32 Bot.	0	530-5332-01
3	Mini-Post Wood Screw (no cut-away)	9	530-5004-01	12	Post Hex Base (No Tap)/#10-32 Bot.	2	530-5332-00
4	Mini-Post Mach. Screw / #10-32 Bot.	4	530-5005-00	13	Post Hex Base #8-32 Top/#10-32 Bot.	0	530-5332-02
5	Post Fasten #6-32 Top / #8-32 Bot.	0	530-5007-00	14	Post Hex Base #6-32 Top/#10-32 Bot.	3	530-5332-03
6	Post Fasten #8-32 Top / #6-32 Bot.	0	530-5008-00	15	Playfield Support #8-32 Top/Bottom	0	530-5285-00
7	Post Fasten #6-32 Top / #6-32 Bot.	28	530-5012-02	16	#6-32 X 3/4" Fin Shank Screw	0	237-5921-02
8	Post Fstn. #6-32 Top / Wood Scr. Bot.	14	530-5010-02	17	#6-32 X 1-1/4" Fin Shank Screw	4	237-5883-00
9	Post #6-32 Top / Wood Screw Bottom	0	530-5263-01	18	#6-32 X 1-3/16" Spirol Fin Shank Scr.	9	237-5957-00

† Items with a Zero Qty. are not used in this game. Size and/or quantities may change during production.

Playfield - Metal Spacers (Actual Size) †

A ***Standard USA 9 Inch Ruler*** is provided on the back cover.

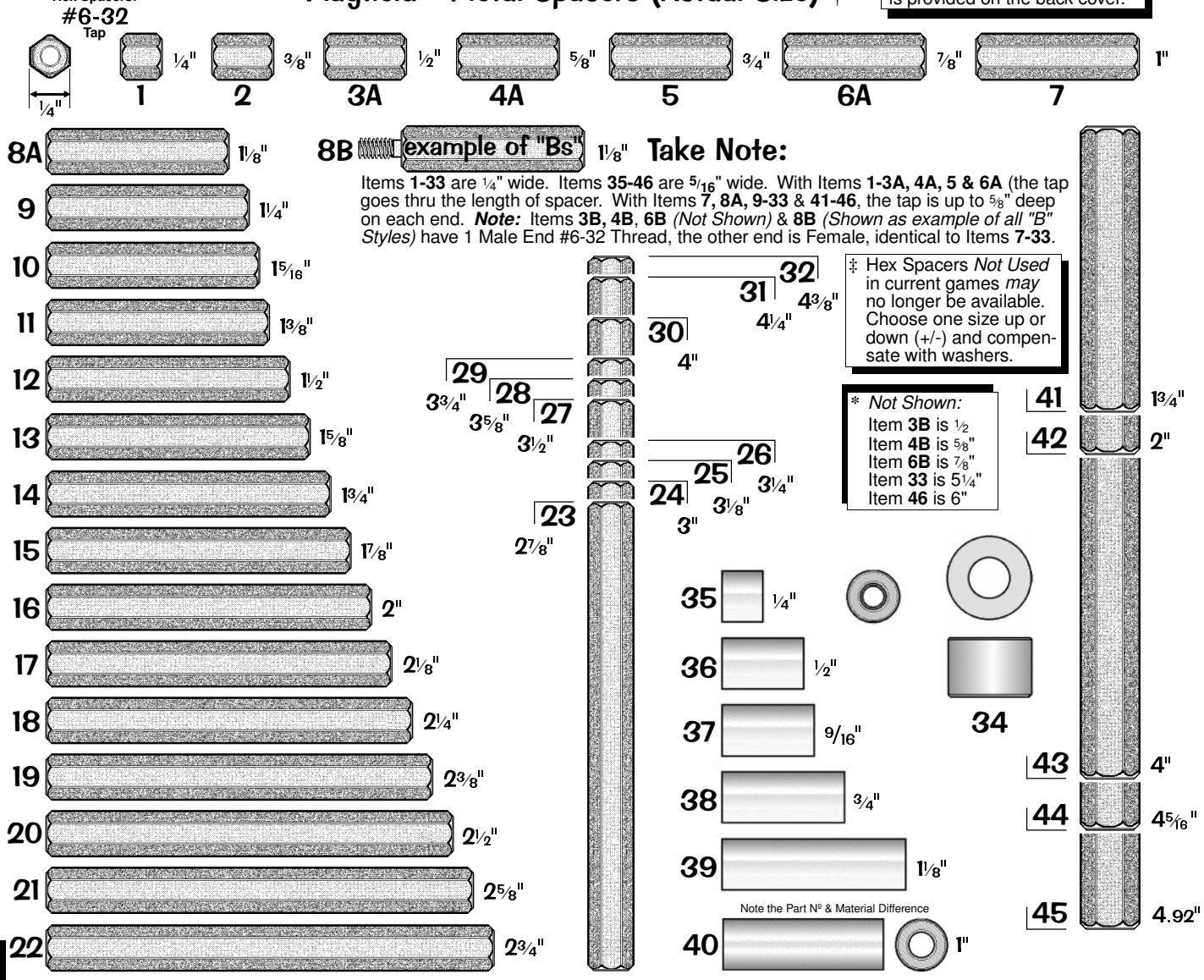

Take Note:

Items **1-33** are 1/4" wide. Items **35-46** are 5/16" wide. With Items **1-3A, 4A, 5 & 6A** (the tap goes thru the length of spacer. With Items **7, 8A, 9-33** & **41-46**, the tap is up to 5/8" deep on each end. ***Note:*** Items **3B, 4B**, **6B** *(Not Shown)* & **8B** *(Shown as example of all "B" Styles)* have 1 Male End #6-32 Thread, the other end is Female, identical to Items **7-33**.

‡ Hex Spacers *Not Used* in current games *may* no longer be available. Choose one size up or down (+/-) and compensate with washers.

* *Not Shown:*
Item **3B** is 1/2
Item **4B** is 5/8"
Item **6B** is 7/8"
Item **33** is 5 1/4"
Item **46** is 6"

Nº	METAL SPACER NAME	QTY.	SPI PART Nº	Nº	METAL SPACER NAME	QTY.	SPI PART Nº
1	1/4" X 1/4" Hex Spacer #6-32 Tap	0	254-5008-00	22	2 3/4" X 1/4" Hex Spacer #6-32 Tap	0	254-5008-15
2	3/8" X 1/4" Hex Spacer #6-32 Tap	0	254-5008-12	23	2 7/8" X 1/4" Hex Spacer #6-32 Tap	0	254-5008-31
3A	1/2" X 1/4" Hex Spacer #6-32 Tap	3	254-5008-03	24	3" X 1/4" Hex Spacer #6-32 Tap	0	254-5008-14
3B	Same as 3A but with Male End #6-32	9	254-5024-03	25	3 1/8" X 1/4" Hex Spacer #6-32 Tap	0	254-5008-19
4A	5/8" X 1/4" Hex Spacer #6-32 Tap	1	254-5008-02	26	3 1/4" X 1/4" Hex Spacer #6-32 Tap	0	254-5008-26
4B*	Same as 4A but with Male End #6-32	0	254-5024-02	27	3 1/2" X 1/4" Hex Spacer #6-32 Tap	1	254-5008-27
5	3/4" X 1/4" Hex Spacer #6-32 Tap	13	254-5008-04	28	3 5/8" X 1/4" Hex Spacer #6-32 Tap	0	254-5008-25
6A	7/8" X 1/4" Hex Spacer #6-32 Tap	1	254-5008-05	29	3 3/4" X 1/4" Hex Spacer #6-32 Tap	0	254-5008-36
6B*	Same as 6A but with Male End #6-32	1	254-5024-05	30	4" X 1/4" Hex Spacer #6-32 Tap	0	254-5008-21
7	1" X 1/4" Hex Spacer #6-32 Tap	0	254-5008-06	31	4 1/4" X 1/4" Hex Spacer #6-32 Tap	0	254-5008-30
8A	1 1/8" X 1/4" Hex Spacer #6-32 Tap	2	254-5008-17	32	4 3/8" X 1/4" Hex Spacer #6-32 Tap	0	254-5008-29
8B	Same as 8A but with Male End #6-32	0	254-5024-17	33*	5 1/4" X 1/4" Hex Spacer #6-32 Tap	0	254-5008-35
9	1 1/4" X 1/4" Hex Spacer #6-32 Tap	0	254-5008-11	34	3/8" X 1/2" Spacer (Used with Backbox)	2	530-5099-00
10	1 5/16" X 1/4" Hex Spacer #6-32 Tap	0	254-5008-34	35	1/4" X 5/16" X .144" I.D. Spacer Tap	1	254-5014-03
11 ‡	1 3/8" X 1/4" Hex Spacer #6-32 Tap	0	254-5008-33	36	1/2" X 5/16" X .144" I.D. Spacer Tap	3	254-5014-00
12	1 1/2" X 1/4" Hex Spacer #6-32 Tap	0	254-5008-09	37	9/16" X 5/16" X .144" I.D. Spacer Tap	0	254-5014-04
13 ‡	1 5/8" X 1/4" Hex Spacer #6-32 Tap	0	254-5008-13	38	3/4" X 5/16" X .144" I.D. Spacer Tap	0	254-5014-01
14	1 3/4" X 1/4" Hex Spacer #6-32 Tap	1	254-5008-10	39	1 1/8" X 5/16" X .144" I.D. Spacer Tap	0	254-5014-02
15 ‡	1 7/8" X 1/4" Hex Spacer #6-32 Tap	0	254-5008-20	40	1" X 5/16" X .144" I.D. Spacer Tap	0	254-5001-00
16	2" X 1/4" Hex Spacer #6-32 Tap	2	254-5008-07	41	1 3/4" X 5/16" Hex Spacer #6-32 Tap	0	254-5018-06
17	2 1/8" X 1/4" Hex Spacer #6-32 Tap	3	254-5008-32	42	2" X 5/16" Hex Spacer #6-32 Tap	0	254-5018-07
18	2 1/4" X 1/4" Hex Spacer #6-32 Tap	2	254-5008-18	43	4" X 5/16" Hex Spacer #6-32 Tap	0	254-5018-03
19	2 3/8" X 1/4" Hex Spacer #6-32 Tap	2	254-5008-28	44	4 5/16" X 5/16" Hex Spacer #6-32 Tap	0	254-5018-00
20	2 1/2" X 1/4" Hex Spacer #6-32 Tap	0	254-5008-16	45	4.92" X 5/16" Hex Spacer #6-32 Tap	0	254-5018-04
21	2 5/8" X 1/4" Hex Spacer #6-32 Tap	0	254-5008-08	46*	6" X 5/16" Hex Spacer #6-32 Tap	0	254-5018-02

† Items with a Zero Qty. are not used in this game. Size and/or quantities may change during production.

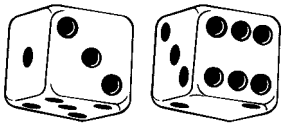

Playfield - Plastic Posts and Spacers (Actual Size) †

1** Various Colors

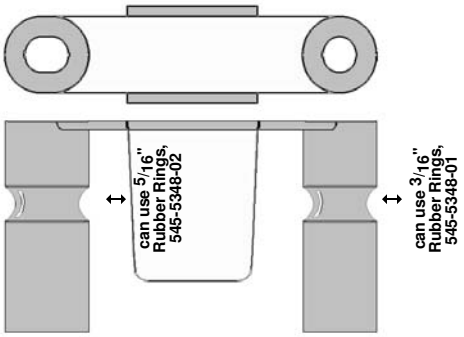

2** Various Colors

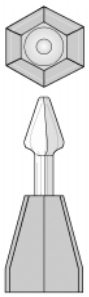

3** Limited Colors

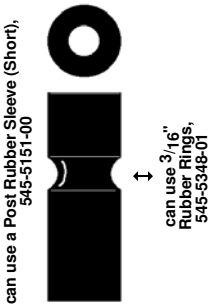

4** Various Colors

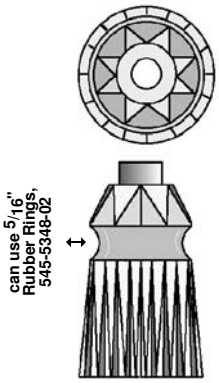

Items 3-4 Posts used in pairs can use 3/4" through 3" Rubber Rings, (See Rubber Parts for Part Nºs).

Take Note:

PLASTIC PART COLOR CHART					
Nº	Color	Nº	Color	Nº	Color
-00	Black	-06	Yellow	-12	Fluor. Blue
-01	Clear	-07	Orange	-13	Teal Green
-02	Red	-08	White	-14	Gray
-03	Amber	-09	Purple	-15	Luminescent
-04	Green	-10	Fluor. Orange	-16	Gold
-05	Blue	-11	Fluor. Green		

** Items **1, 2 & 4** come in various colors (may not be available in every color). Item **3** is currently only available in the color stated in this game manual (other colors used in prior games may no longer be available). The "-XX" in Part Nºs which may come in various colors should be replaced with the desired 2-Digit Nº. corresponding to the color desired. *Some colors may no longer be available for desired item.*

5 ‡ 6 ‡ 7 ‡ 8 ‡ 9

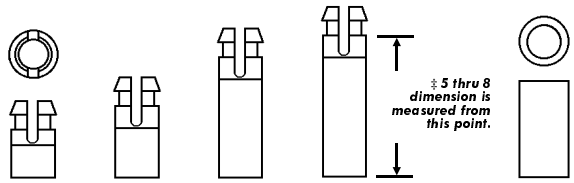

1/4" 3/8" 5/8" 3/4" 1/2"

‡ Items **5** through **8** (Board Spacers) dimensions are measured from bottom to just under cut-away (see pictorial with Item 8 above).

10 11 12 13 14 15 16 17 18 19 20

Take Note:

If any one of Items **10-20** Spacers is not available in the size required, order the smaller sized spacers required to stack sizes together until appropriate size is achieved (e.g. If 1 1/8" is needed but unavailable, order a 1/2" + 5/8" & stack to = 1 1/8").

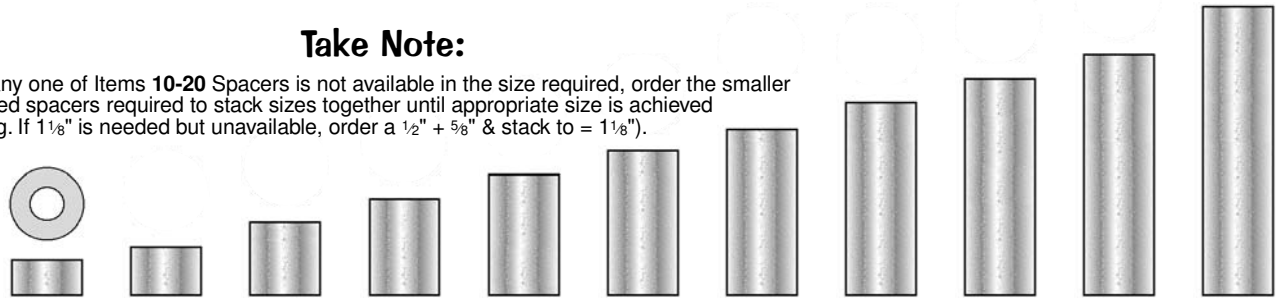

3/16" 1/4" 3/8" 1/2" 5/8" 3/4" 7/8" 1" 1 1/8" 1 1/4" 1 1/2"

Nº	PLASTIC POST/SPACER NAME	QTY.	SPI PART Nº
1**	Top Lane Mini-Light Hood (~)	0	550-5061-XX
	Item 1 typically secured by: #6-32 X 1-3/4" PPH MS (Zinc) (Qty. 2/per) (237-5511-00) **and** Washer 9/64" X 5/16" OD X 1/32" (Qty. 2/per) (242-5017-00)		
2**	Mini-Jewel Post Clear	3	550-5052-01
	Item 2 typically secured by: #6 X 3/8" HWH AB (Zinc) (Qty. 1/per) (234-5000-00)		
3**	1 1/16" Single Groove Post (Black)	54	550-5059-00
4**	*Single* Groove Jewel Post (Clear)	2	550-5034-01
	Items 3 & 4 typically secured by: Post Fastening Screw #6-32 Top / #6-32 Bottom (Qty. 1/per) (530-5012-02, Item 7 Page 59) ***and may use*** Washer 9/64" X 5/16" OD X 1/32" (Qty. 1/per) (242-5017-00) **with a** #6-32 Nylon Stop Nut (Qty. 1/per) (240-5005-00).		
5 ‡	1/4" Slf. Rtn. Spacer White	0	254-5007-02
6 ‡	3/8" Slf. Rtn. Spacer White	0	254-5007-01
7 ‡	5/8" Slf. Rtn. Spacer White	0	254-5007-00
8 ‡	3/4" Slf. Rtn. Spacer White	0	254-5007-03

Nº	PLASTIC POST/SPACER NAME	QTY.	SPI PART Nº
9	1/2" X 1/4" Spacer White (Narrow)	0	254-5000-03
10	3/16" X 3/8" Spacer Gray (4 for Dot Display)	5	254-5000-18
11	1/4" X 3/8" Spacer Gray	0	254-5000-02
12	3/8" X 3/8" Spacer Gray	0	254-5000-12
13	1/2" X 3/8" Spacer Gray	0	254-5000-01
14	5/8" X 3/8" Spacer Gray	0	254-5000-14
15	3/4" X 3/8" Spacer Gray	0	254-5000-07
16	7/8" X 3/8" Spacer Gray	1	254-5000-11
17	1" X 3/8" Spacer Gray/Black	1	254-5000-04
18	1 1/8" X 3/8" Spacer Gray	0	254-5000-06
19	1 1/4" X 3/8" Spacer Gray	0	254-5000-05
20	1 1/2" X 3/8" Spacer Gray	0	254-5000-08

Items 3, 4 & 17 typically secured by: Items 6, 7 & 8 Post Fasten Screws, see Page 59.
Items 10-20 typically secured by: #6 PPH Screw 1/2" Longer than spacer size.

† Items with a Zero Qty. are not used in this game. Size and/or quantities may change during production.

Playfield - Small Bayonet Type Bulbs and Sockets (Actual Size) †

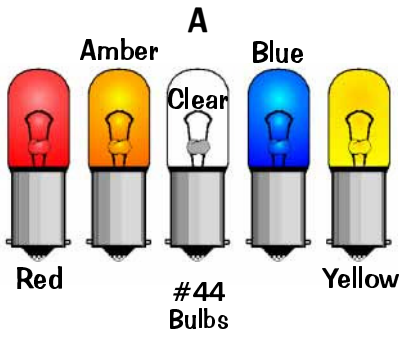

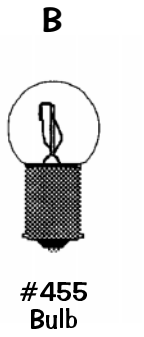

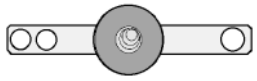

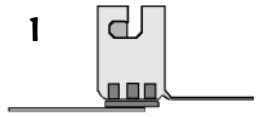

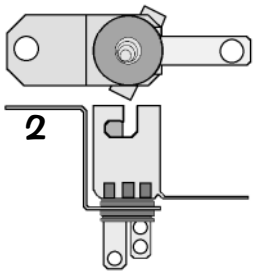

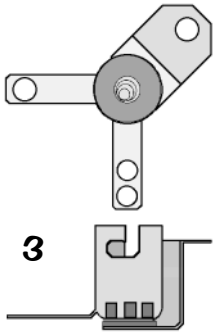

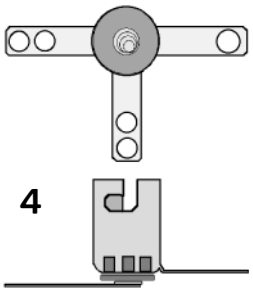

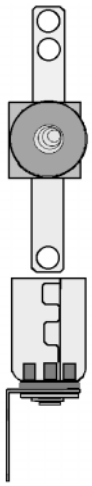

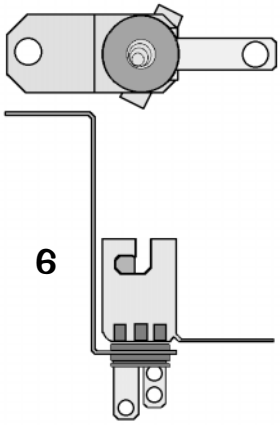

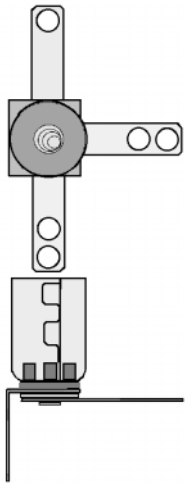

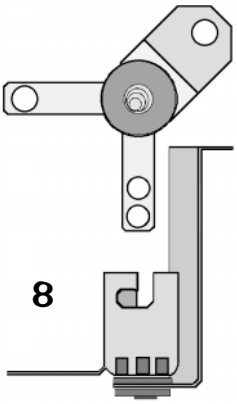

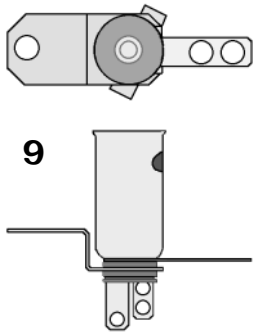

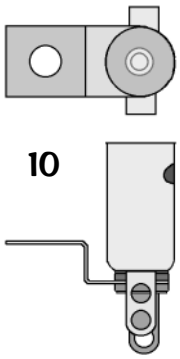

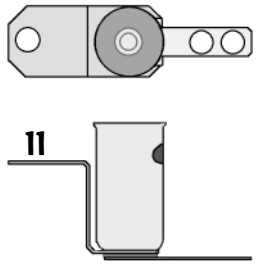

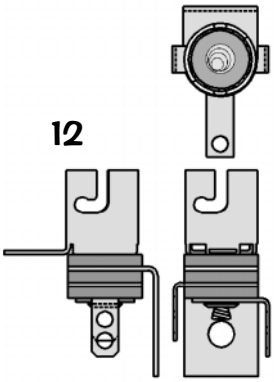

Sec. 4: Parts Id. ...

№	SMALL BULB & SOCKET NAME	QTY.	SPI PART №
A	#44 Bulb (Clear)	35	165-5000-44
	#44 Bulb (Red)	2	165-5053-02
	#44 Bulb (Amber)	4	165-5053-03
	#44 Bulb (Blue)	0	165-5053-05
	#44 Bulb (Yellow)	4	165-5053-06
B	#455 Twinkle Bulb	0	165-5003-00
1	2-Lug Staple Down Socket	0	077-5000-00
2	3-Lug Stand-Up Short Socket	0	077-5008-00
3	2-Lug Stand-Up Short Socket	0	077-5002-00
4	3-Lug Staple Down Socket	0	077-5001-00
5	2-Lug Laydown Socket	0	077-5003-00
6	3-Lug Stand-Up Long Socket	0	077-5009-00
7	3-Lug Laydown Socket (3 Lugs Flat)	0	077-5006-00
8	2-Lug Stand-Up Long Socket	1	077-5005-00
9	3-Lug Stand-Up Long Shell Socket	10	077-5013-00
10	2-Lug Stand-Up Lg. Shell Socket (Gls)	34	077-5031-00

№	SMALL BULB & SOCKET NAME	QTY.	SPI PART №
11	1-Lug Stand-Up Long Shell Socket	0	077-5012-00
12	3-Lug Laydown Socket (2 Lugs Bent)	0	077-5032-00

† Items with a Zero Qty. are not used in this game. Size and/or quantities may change during production.

Playfield - Large Bayonet Type Bulb and Sockets (Actual Size) †

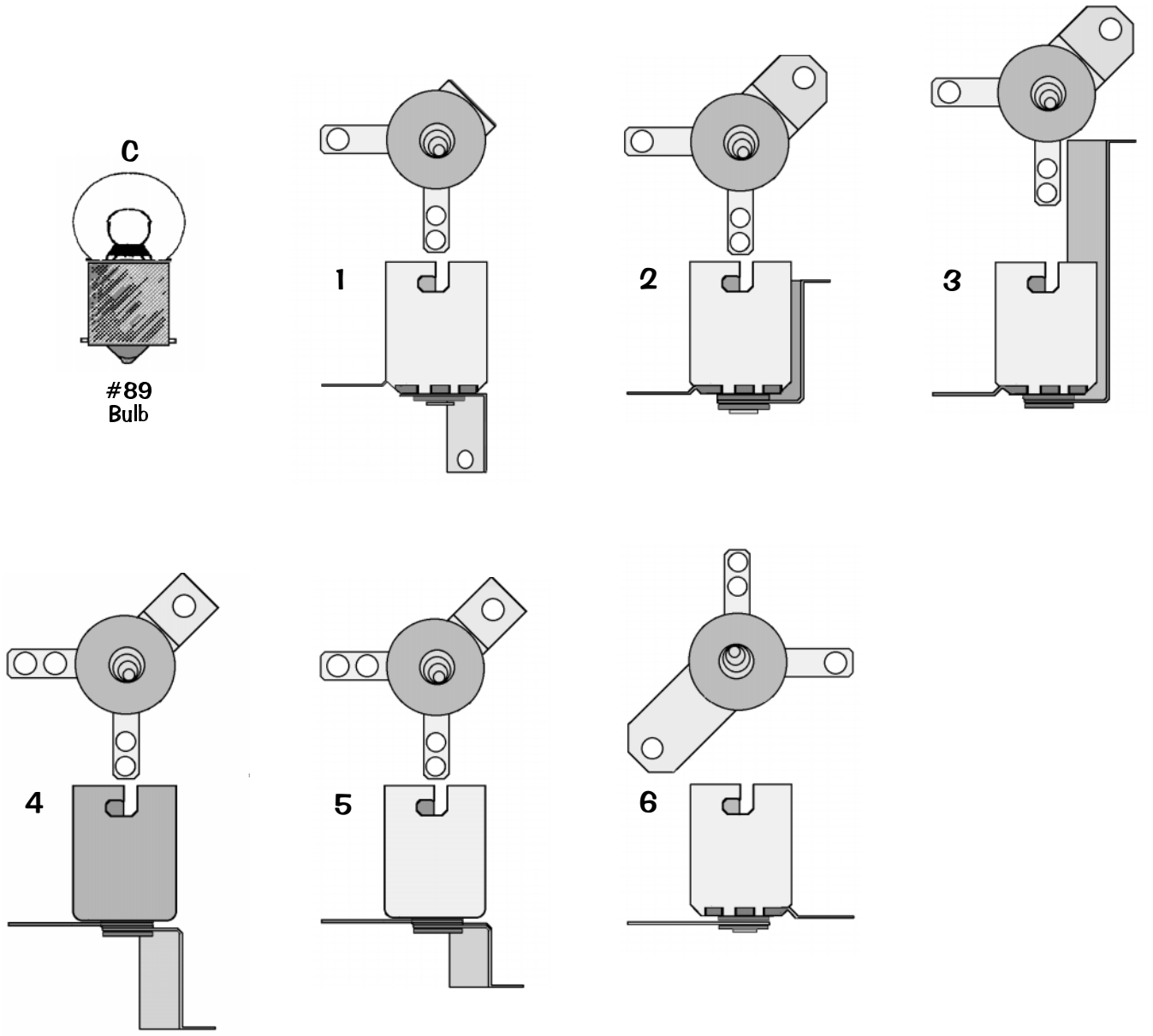

Nº	LARGE BULB & SOCKET NAME	QTY.	SPI PART Nº
C	#89 Bulb	2	165-5000-89
1	Laydown Standard Socket	0	077-5100-00
2	2-Lug Stand-Up Short Socket	0	077-5101-00
3	2-Lug Stand-Up Long Socket	2	077-5102-00
4	Stand-Up Socket Rev. Short	0	077-5103-00
5	2-Lug Stand-Up Small Socket	0	077-5106-00
6	Straight Leg Socket	0	077-5107-00

† Items with a Zero Qty. are not used in this game. Size and/or quantities may change during production.

Playfield - Wedge Base Bulbs and Sockets (Actual Size) †

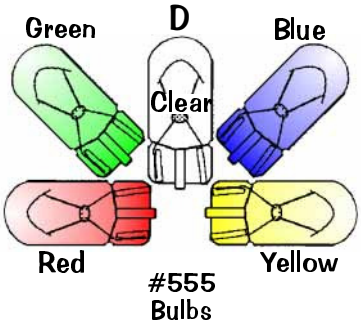

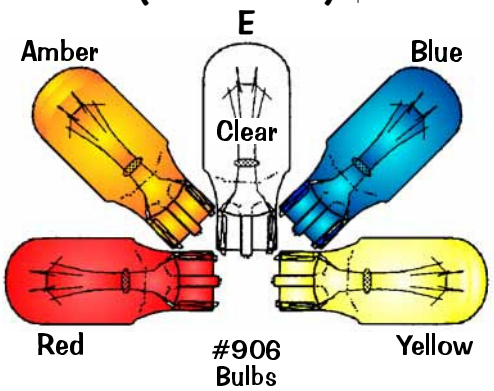

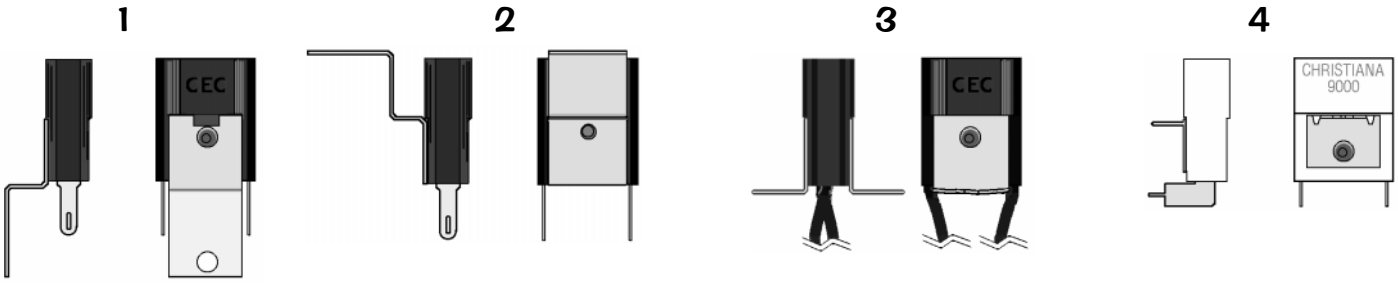

7a/7b Top View (7b Side View is Not Shown)

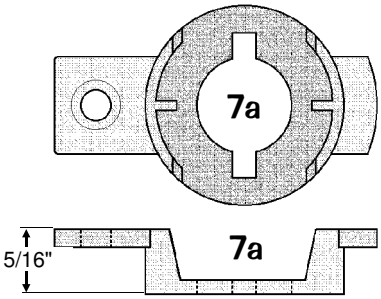

Take Special Note

Item 7 is an **IDC** (Insulation Displacement Connection) Style Socket. This style is solderless, and has a built-in diode. This socket is secured to the playfield or component by Items **7a** and **7b** Snap-On Socket Brackets, or *may* also be snapped into **Item 7c** Socket Mounting Board. Just squeeze the "side arms" of the socket together and pull away from the bracket or mounting board for easy Bulb replacement.

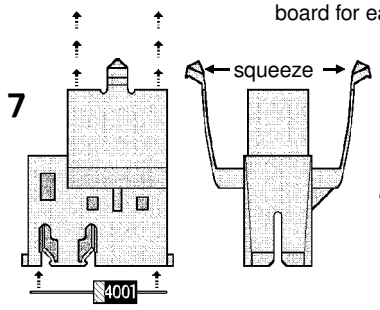

This Socket is equipped with a *built-in* Diode, 1N4003, (112-5003-00). However, replacement can be made with Diode, 1N4001, (112-5001-00).

Note: Item 7c Socket Mounting Board is used only when sockets are positioned too close together (typically is a clear plastic piece; if used in this game, Item 7c will show the quantity and the Part Nº.).

Item 7c Located in the Backbox.

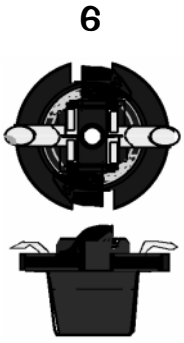

Take Note:

∗ An asterisk (∗) indicates item(s) are not noted in the pictorials.

1. Item **3** Socket has 2 Wires attached are approximately 12" ea.
2. Item **4** Socket **was** used on PC Light Boards to position bulbs horizontally; Item **4** Socket is secured by soldering into place.
3. Item **5** Socket **was** used on PC Light Boards to position bulbs vertically; Item **5** Socket is secured by "twisting" into place.
4. Item **E** Bulb (#906) is normally used in conjunction with Item **6** Socket, but ***can*** be used with Items **1, 2, 4** or **7**.

Note: Always replace with same type bulb in original application.

5. See the start of this chapter for Fluor. Bulb & Assoc. Parts.

Nº	WEDGE BULB & SOCKET NAME	QTY.	SPI PART Nº	Nº	WEDGE BULB & SOCKET NAME	QTY.	SPI PART Nº
D	#555 Wedge Base Bulb (Clear)	75	165-5002-00	6	#906 Wedge Base Socket (Twist)	0	077-5016-00
	#555 Wedge Base Bulb (Red)	0	165-5054-02	7	#555 IDC Snap-On Socket	67	077-5216-00
	#555 Wedge Base Bulb (Green)	0	165-5054-04	7a	5/16" Ht. Snap-On Socket Bracket	51	545-5760-18
	#555 Wedge Base Bulb (Blue)	0	165-5054-05	7b ∗	19/32" Ht. Snap-On Socket Bracket	0	545-5760-19
	#555 Wedge Base Bulb (Yellow)	0	165-5054-06	7c ∗	Clear Plastic (Buty.) Socket Mtg. Bd.	1	830-5979-00
1	#555 Wedge Base Socket (Laydown)	5	077-5026-01	E	#906 Wedge Base Bulb (Clear)	4	165-5004-00
2	#555 Wedge Base Socket (Offset)	4	077-5029-00		#906 Wedge Base Bulb (Red)	0	165-5004-02
3	#555 W.B. Socket (for Pop Bumper)	3	077-5206-00		#906 Wedge Base Bulb (Amber)	0	165-5004-03
4	#555 W.B. Socket (Solder Type)	0	077-5207-00		#906 Wedge Base Bulb (Blue)	0	165-5004-05
5	#555 Wedge Base Socket (Twist)	0	077-5007-00		#906 Wedge Base Bulb (Yellow)	0	165-5004-06

† Items with a Zero Qty. are not used in this game. Size and/or quantities may change during production.

Drawings for Major Assemblies & Ramps (The Blue Pages)

Overview

Drawings are provided for the Major Assemblies in this game with individual parts of each assembly numbered. Items noted with a white circle ○ are mounted above the playfield; items noted with a black circle ● are mounted below. All numbered parts describe the **NAME**, **QUANTITY** & **PART Nº**. **ASSOCIATED PARTS** (**AP-**) are noted and/or viewed with the associated Major Assembly. ***Important:*** Read all "**Take Note:**" items.

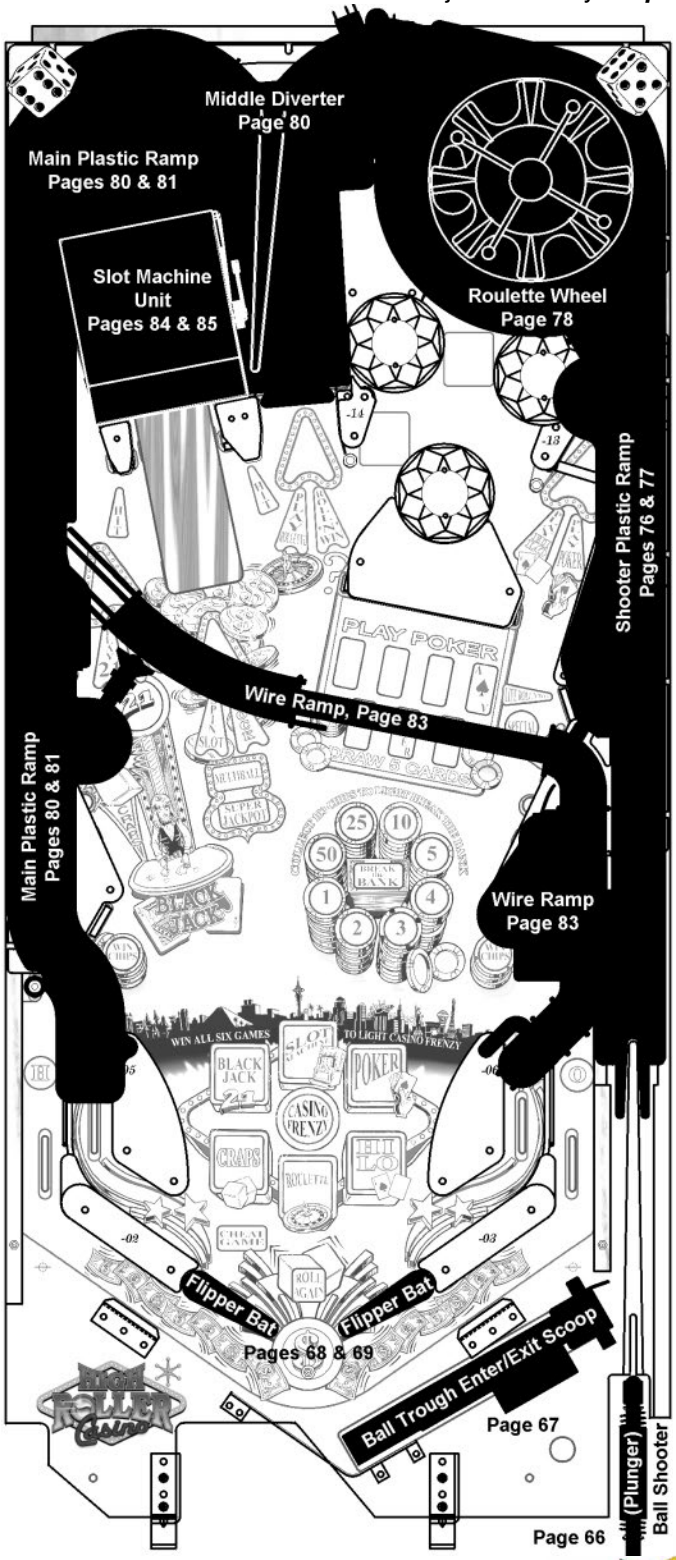

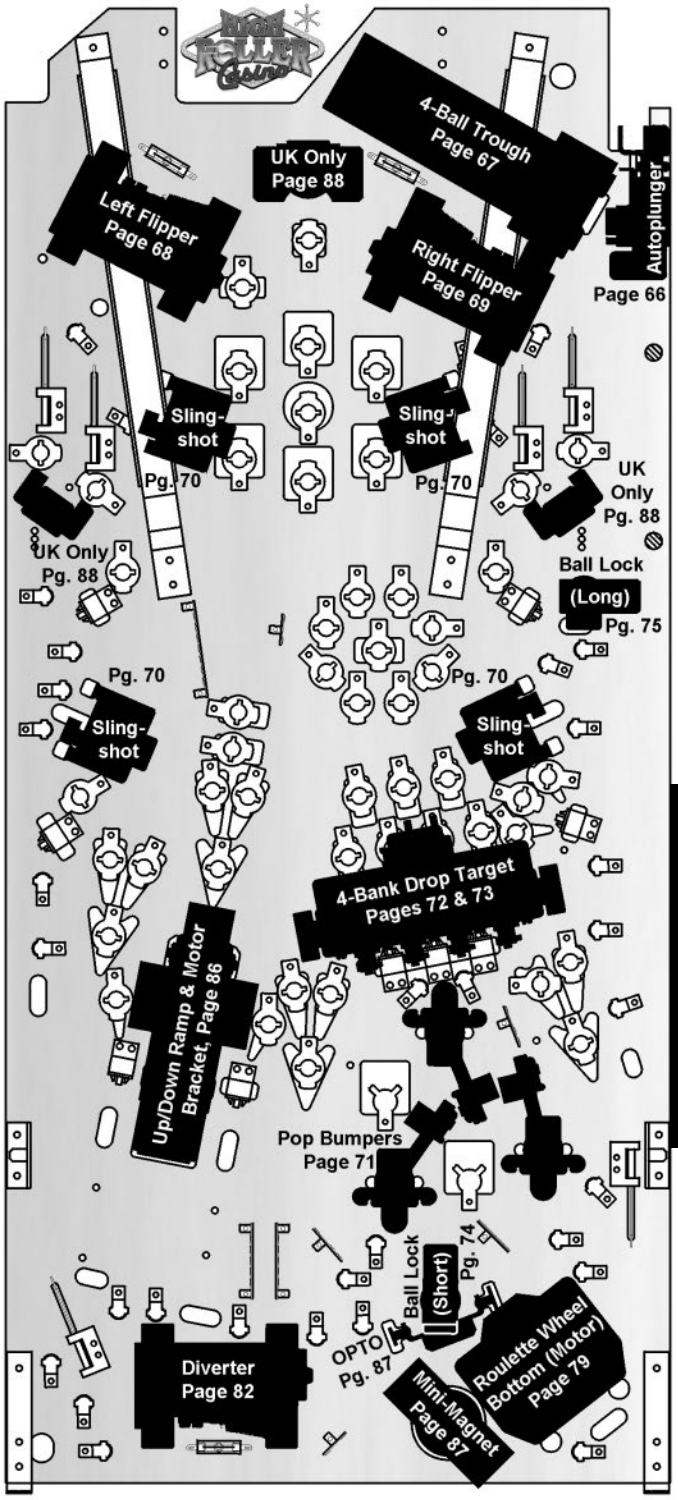

Ball Shooter (Plunger) Assembly, 500-6146-00-04 (Items 1-8)

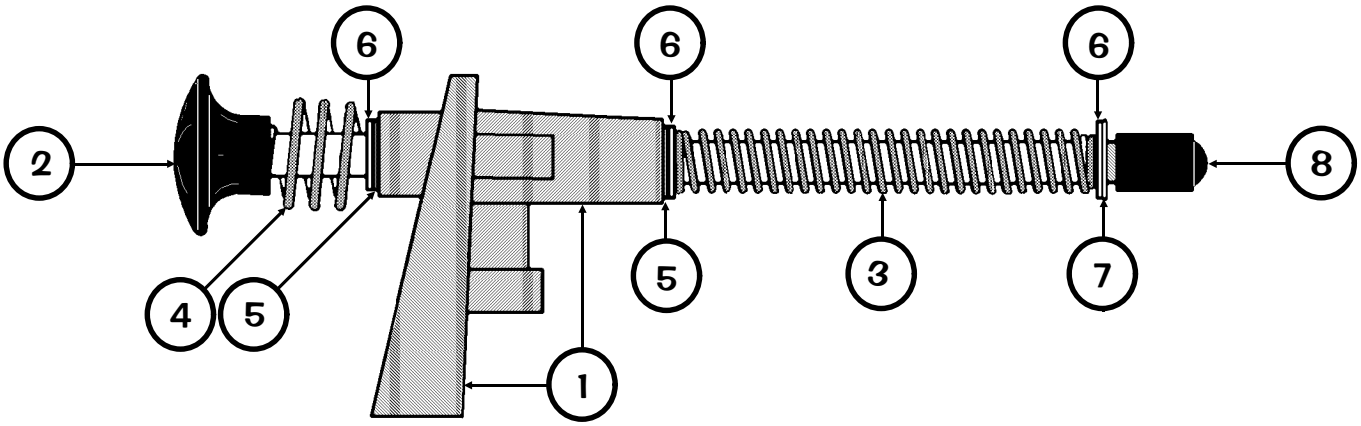

Nº	INDIVIDUAL PART NAME	QTY.	SPI PART Nº	Nº	INDIVIDUAL PART NAME	QTY.	SPI PART Nº
1	Housing (Shooter Assembly)	1	535-5067-02	6	Washer, 3/8" I.D. X 5/8" O.D. X 1/16"	3	242-5014-00
2	Rod Assembly (w/Black Knob)	1	515-6557-00	7	Retaining Ring, 3/8" ø Shaft	1	270-5012-00
3	Comp. Spring (Green, .035" ø)	1	266-5001-04	8	Plunger Tip (Black 50 Duro)	1	545-5276-00
4	Compression Spring (Short Plunger)	1	266-5010-00				
5	Bushing, 3/8" I.D. (Oilite)	2	280-5010-00				

Ball Shooter (Plunger) Assembly (500-6146-50-04) is secured to the Cabinet by: Support Plate (Qty. 1) (535-5027-00), #10-32 X 1/2" PPH (Sems) Zinc TF (Qty. 3) (237-6033-00), #10 Split Lock Washer (Qty. 3) (234-5003-00) **and** #6 X 5/8" HWH AB (Zinc) (Qty. 2) (234-5002-00)

Autoplunger Coil Assembly, 500-6092-04 (Items 1-6) with Autoplunger Arm Weld Assembly, 500-6091-00 (Items 7-9)

Nº	INDIVIDUAL PART NAME	QTY.	SPI PART Nº
	Autoplunger Coil Assembly, 500-6092-04 (Items 1-6)		
1	Autoplunger Coil Bracket Assembly	1	515-6527-00
2	Coil Retainer Bracket	1	535-5203-03
	Item 2 is secured to Item 1 by: #8-32 X 1/4" PPH MS (Sems) Zinc (Qty. 2) (232-5300-00)		
3	Coil, 22-600	1	090-5023-00T
	ORDERING ABOVE (ITEM 3) COIL PART Nº WILL INCLUDE:		
—	Diode, 1N4004 (positioned at top)	1	112-5003-00
4	Coil Sleeve	1	545-5031-00
5	Plunger & Link Assembly	1	515-5338-00
	ORDERING ABOVE (ITEM 5) SUB-ASSY. PART Nº WILL INCLUDE:		
5A	Plunger 2"	1	530-5025-01
5B	Plunger Link	1	545-5293-00
5C	Roll Pin, 1/8" ø X 5/8" Lg.	1	251-5008-00
	Item 5B is secured to Item 7 by: Retaining Ring, 1/4" ø Shaft (Qty. 1) (270-5002-00)		
6	Compression Return Spring	1	266-5020-00
	Autoplunger Arm Weld Assy., 500-6091-00 (Items 7-9)		
7	Arm Weld Assembly	1	515-6526-00
	Item 7 is secured to Item 8 by: Retaining Ring, 1/4" ø Shaft (Qty. 1) (270-5002-00)		
8	Autoplunger Fulcrum	1	535-7697-00
9	Nyliner, 1/4" (Thomson #4l1-FF)	2	545-5423-00

Autoplunger Arm Weld Assembly (500-6091-00) and Autoplunger Coil Assembly (500-6092-02) are secured under the playfield by: #8 X 1/2" SHWH AB (Zinc) (Qty. 9) (234-5101-00)

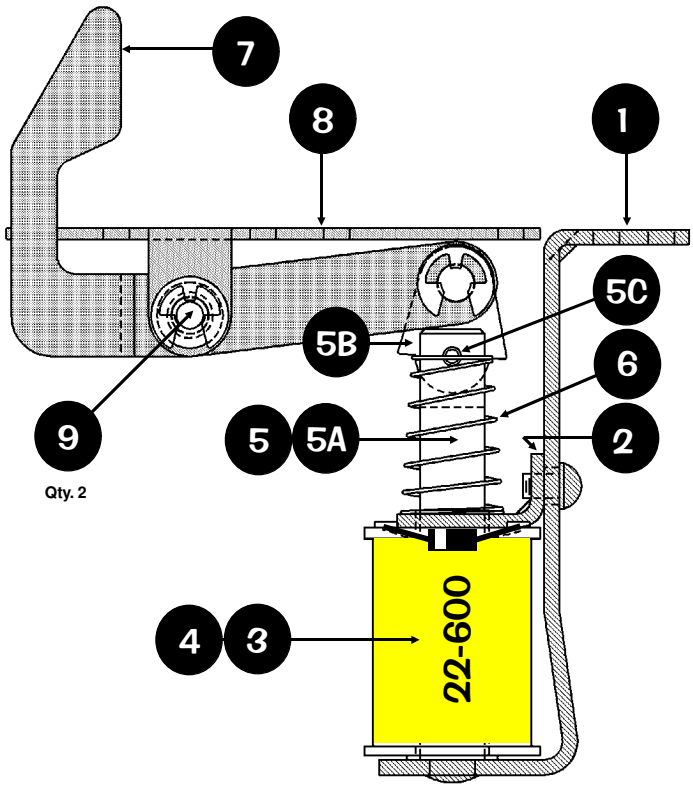

4-Ball Trough Assembly, 500-6318-24 (Items 1-12B)
and Associated Parts: See Parts Table below.

Take Special Note:

Item **AP-A**, Enter / Exit Scoop, 535-7329-01 (*not included with the 4-Ball Trough Assy.*), is shown how it is actually positioned over the 4-Ball Trough Assembly. It is mounted above the playfield.

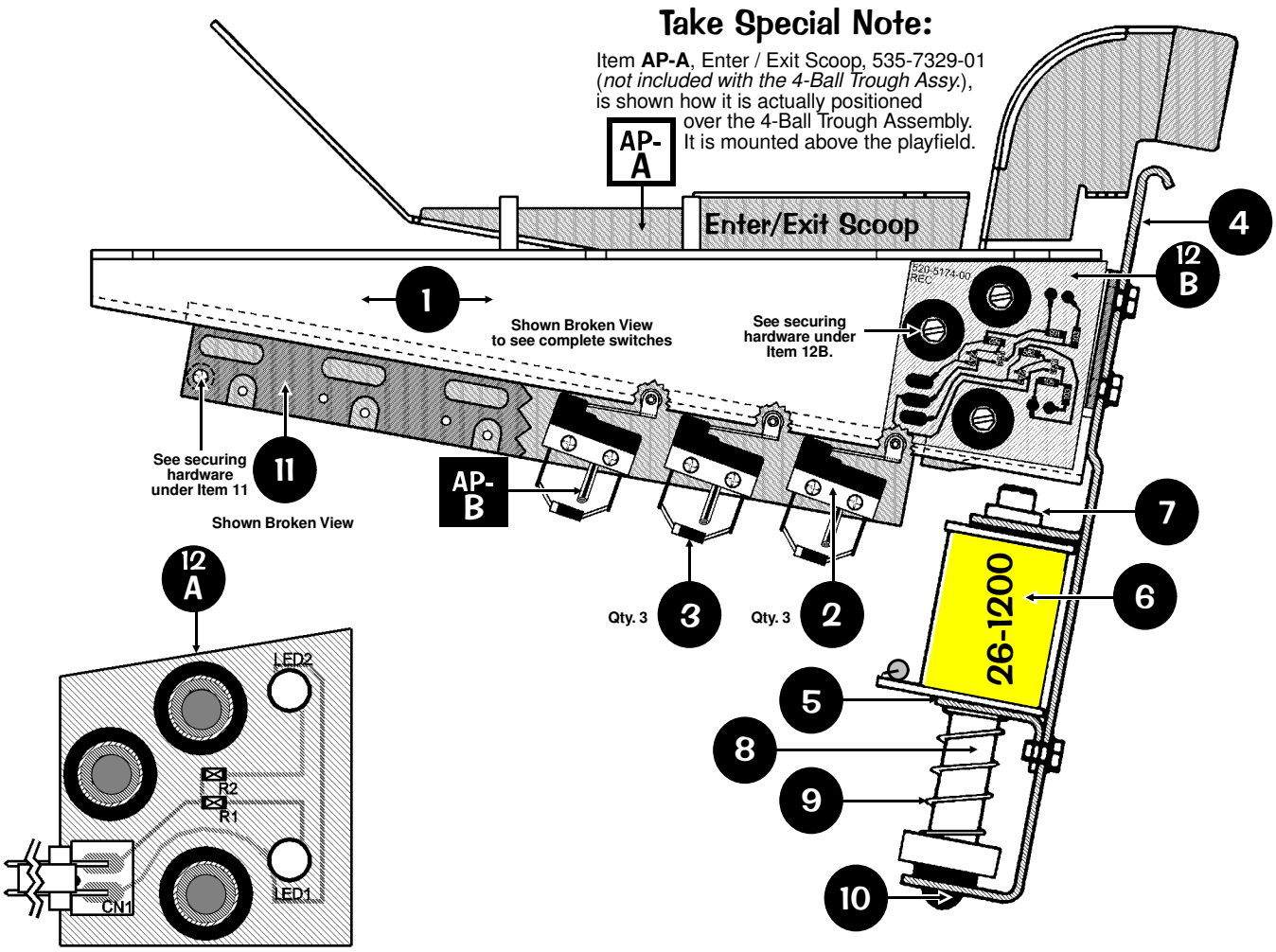

Item 12A, Dual OPTO TRANS (Transmitter) Board, 520-5173-00, is mounted on the other side of the Trough Assembly, in line with Item 12B, Dual OPTO REC (Receiver) Board, 520-5174-00, using same hardware.

Take Note:

* An asterisk (*) indicates item(s) are not noted in the pictorials.

For a break-down of parts on these OPTO Boards (520-5173-00 & 520-5174-00), see Section 5, Chapter 4, Trough Up-Kicker Dual OPTO Boards Theory of Operation & Schematic, Component Layout & Parts, Page 99.

Nº	INDIVIDUAL PART NAME	QTY.	SPI PART Nº
1	Ball Trough Outhole Mounting Bracket	1	515-6580-01
2	Micro Switch (Roller Actuator, Lite-Force)	3	180-5119-02
Item 2 is secured to Item 1 by: #2-56 X 1/2" HWH (Ser) UNS #4HD TR3 BO (Qty. 1/per) (237-5937-02) ***Item 2 requires:*** Heat Shrink Tubing 1/8" ø PUI-24 (Qty. 1"/per) (605-5006-00)			
3	Switch Diode, 1N4001	3	112-5001-00
4	Coil Mounting Bracket	1	535-7330-01
Item 4 is secured to Item 1 by: #8-32 X 3/8" HWH Swage (Sr.) Zinc (Qty. 4) (237-5975-00)			
5	Coil Retaining Bracket	1	535-5203-03
Item 5 is secured to Item 4 by: #8-32 X 1/4" HWH MS (Serr) Zinc (Qty. 2) (237-5964-01)			
6	Coil, 26-1200	1	090-5044-00T
ORDERING ABOVE (ITEM 6) COIL PART Nº WILL INCLUDE:			
—	Diode, 1N4004 (positioned at top)	1	112-5003-00
7	Coil Sleeve (Short) (Formost #10-7077)	1	545-5076-01
8	Plunger Assembly	1	515-5941-01
9	Compression Spring	1	266-5020-00

Nº	INDIVIDUAL PART NAME	QTY.	SPI PART Nº
10	Rubber Bumper (Grommet)	1	545-5105-00
11	Trough Ball Guide Plate	1	535-7801-00
Item 11 is secured to Item 1 by: 1/4" X 5/16" X .144" I.D. Spacer Tap. (Qty. 1) (254-5014-03) **and** #2-56 X 1/2" HWH (Ser) UNS #4HD TR3 BO (Qty. 4) (237-5937-02)			
12A	Dual OPTO TRANS Bd. Assembly	1	515-5173-00
12B	Dual OPTO REC Board Assembly	1	515-5174-00
Items 12A & 12B are by: #6-32 X 5/8" HWH Swage (Serr) Zinc (Qty. 3/per) (237-5976-04) *For Individual Items use :* Dual OPTO TRANS Bd. (Qty. 1) (**520-5173-00**), Dual OPTO REC Bd. (Qty. 1) (**520-5174-00**), OPTO PCB Tube Spacer (Brass) (Qty. 3/per) (**530-5308-02**) or OPTO PCB Rubber Grommet (Qty. 3/per) (**545-5518-00**)			
4-Ball Trough Assembly (500-6318-24) is secured below the playfield by: #8 X 1/2" SHWH AB (Zinc) (Qty. 6) (234-5101-00)			

ASSOCIATED PARTS **ARE NOT INCLUDED** WITH THE ABOVE ASSEMBLY.

Nº	ASSOCIATED PART NAME	QTY.	SPI PART Nº
AP-A	Ball Trough Enter / Exit Scoop	1	535-7329-01
Item AP-A secured to the playfield by: #8 X 1/2" SHWH AB (Zinc) (Qty. 4) (234-5101-00).			
AP-B*	Steel Balls (1-1/16" ø)	4	260-5000-00

Flipper (Left) Assembly, 500-5944-11 (Items 1-12)
and Associated Part: White Flipper Bat & Shaft Assy., 515-5133-08-06 (Item AP-A)

IMPORTANT: When replacing Item ®12B, Pawl (Mntg. Link) Assy., we advise replacing with entire Item 12A, Flipper Plunger/Link Assy. due to overall wear & tear. Check all other components and replace as required.

The differences between the Left & Right Flippers are:

Item 1,
Item 4,
and
Item 12B
(just the Pawl)

The coils may also differ depending on the game.

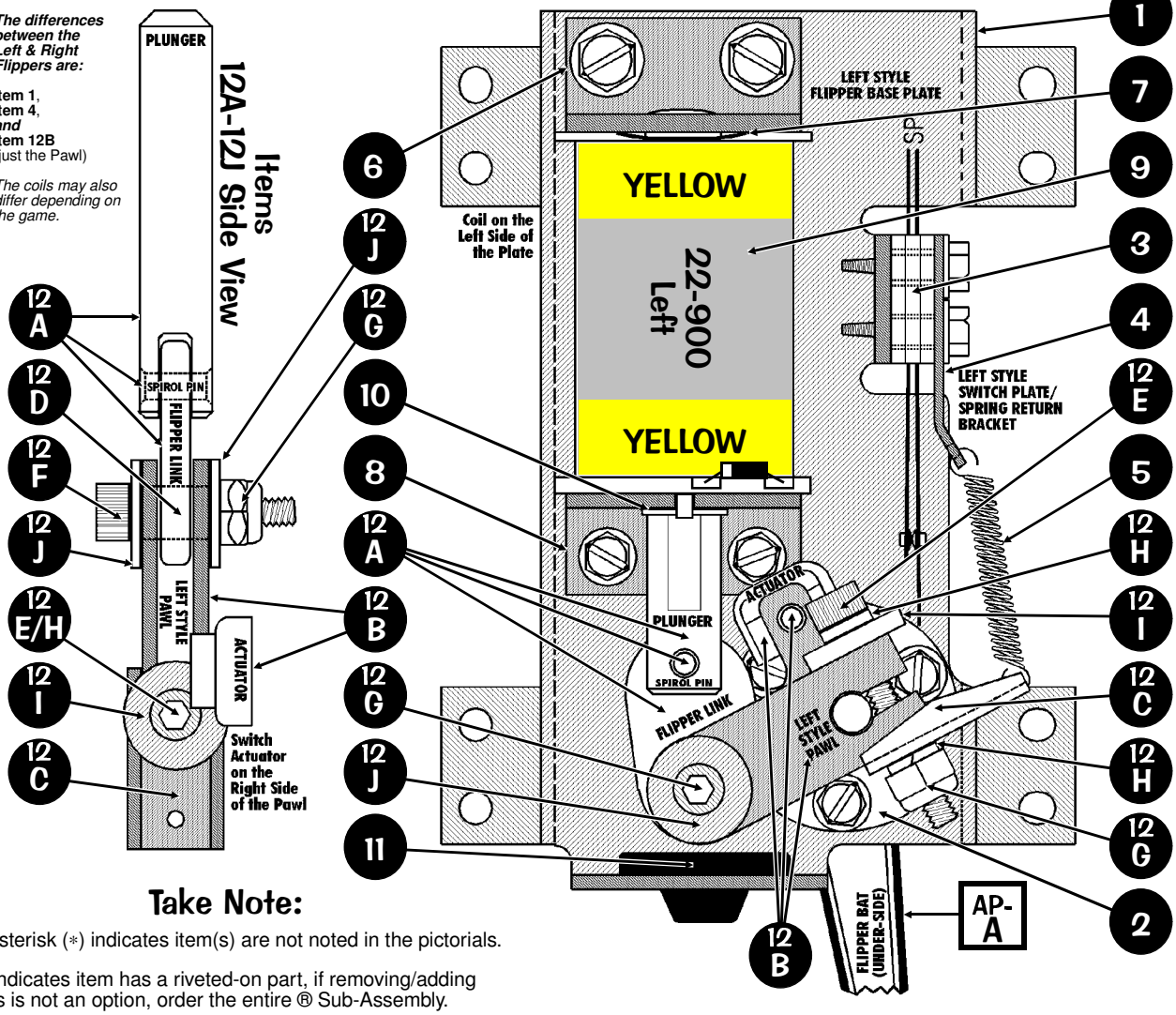

Take Note:

* An asterisk (*) indicates item(s) are not noted in the pictorials.

® "R" indicates item has a riveted-on part, if removing/adding rivets is not an option, order the entire ® Sub-Assembly.

Nº	INDIVIDUAL PART NAME	QTY.	SPI PART Nº
1	Flipper Base Plate Kit (Left)	1	515-6617-01
ORDERING ABOVE (ITEM 1) KIT (LEFT) PART Nº WILL INCLUDE:			
	Note: Flipper Base Plate (Left) comes threaded with all securing hardware (Thread Forming Screws) as listed under each of the Items which will get secured to it (Items **2**, **3**, **6** & **8**).		
2	Flipper Bat Bushing	1	545-5594-00
Item 2 is secured to Item 1 by: #6-32 X 3/8" HWH Swage (Ser.) Zc. (Qty. 3) (237-5976-02)			
3	Power (End of Stroke) Switch	1	180-5149-00
Item 3 is secured to Item 1 by: #6-32 X 5/8" HWH Swage (Ser.) Zc. (Qty. 2) (237-5976-04)			
4	Switch Plate/Spring Return Lt. Brkt.	1	535-7354-01
5	Flipper Return Spring	1	265-5035-00
6	Coil Stop Bracket Sub-Assembly	1	515-6308-01
Item 6 is secured to Item 1 by: #10-32 X 3/8" SHWH Swage (Serr) Zinc (Qty. 2) (237-5985-00) **and** #10 Split Lock Washer (Qty. 2) (244-5003-00)			
7	Spring Washer	1	269-5002-00
8	Coil Support Bracket	1	535-7356-00
Item 8 is secured to Item 1 by: #8-32 X 3/8" HWH Swage (Ser.) Zc. (Qty. 2) (237-5975-00)			
9	Coil, 22-900 (YEL) (Left)	1	090-5020-20T
ORDERING ABOVE (ITEM 9) COIL PART Nº WILL INCLUDE:			
—	Diode, 1N4004 (positioned at top)	1	112-5003-00
10	Coil Sleeve	1	545-5388-00
11	Deflector Pad (Bumper)	1	545-5428-00

Nº	INDIVIDUAL PART NAME	QTY.	SPI PART Nº
12	Plunger, Link & Pawl (Left) Sub-Assy.	1	515-6518-01
ORDERING ABOVE (ITEM 12) SUB-ASSY. PART Nº WILL INCLUDE:			
12A	**Flipper Plunger/Link Sub-Assy.**	**1**	**515-6304-01**
includes :	*Plunger "Flipper" Link*	*1*	*545-5611-00*
includes :	*Spirol Pin ø 5/32" X 3/4" Lg.*	*1*	*251-5015-02*
includes :	*Flipper Plunger with "Flat"*	*1*	*530-5349-01*
®12B	**Pawl (Mntg. Link) (Left) Sub-Assy.**	**1**	**515-6305-01**
includes :	*Pawl (Mounting Link) (Left) Plain*	*1*	*535-7271-01*
includes :	*Switch Actuator*	*1*	*545-5612-00*
includes :	*Rivet, 1/8" ø X 1/4" Lg.*	*1*	*249-5003-00*
12C	**Return Bracket**	**1**	**535-7353-00**
12D	Flipper Link Bushing (Metal, Ext.) (.385" Lg. X .192" ID X .312" OD)	1	530-5139-01
12E	#10-32 X 1-1/4" Lg. Socket Head	1	237-5950-01
12F	#10-32 X 7/8" Lg. Socket Head	1	237-5966-00
12G	#10-32 Nylon Stop Nut	2	240-5203-00
12H	#10 Split Lock Washer	2	244-5003-00
12I	Washer .203" ID X .63" OD X .105" Thk w/cut	1	242-5039-01
12J	Washer .203" ID X .63" OD X .062" Thk	2	242-5038-00

Flipper (Left) Assembly (500-5944-14) is secured below the playfield by:
#10 X 1/2" HWH MS (Serr) Zinc ST (Qty. 8) (237-5949-00)

ASSOCIATED PARTS **ARE NOT INCLUDED** WITH THE ABOVE ASSEMBLY.

Nº	ASSOCIATED PART NAME	QTY.	SPI PART Nº
AP-A	White Flipper Bat & Shaft (Plain) (Non-Knurled End) Assembly	1	515-5133-08-06
	Large Flipper **BLACK** Rubber Ring	1	545-5277-00

Flipper (Right) Assembly, 500-5944-02 (Items 1-12)
and Associated Part: White Flipper Bat & Shaft Assy., 515-5133-08-06 (Item AP-A)

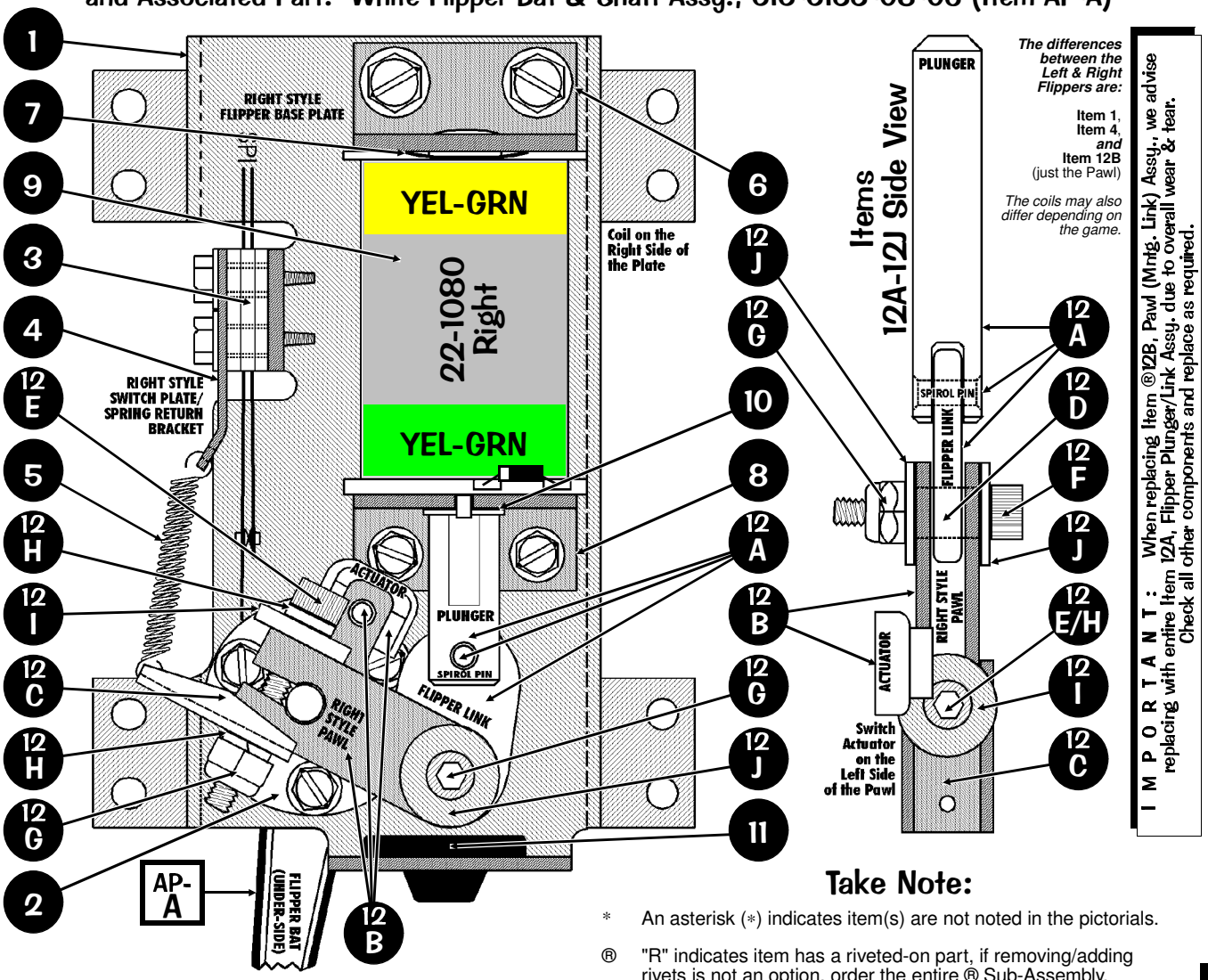

Take Note:

* An asterisk (*) indicates item(s) are not noted in the pictorials.

® "R" indicates item has a riveted-on part, if removing/adding rivets is not an option, order the entire ® Sub-Assembly.

Nº	INDIVIDUAL PART NAME	QTY.	SPI PART Nº
1	Flipper Base Plate Kit (Right)	1	515-6617-00
ORDERING ABOVE (ITEM 1) KIT (RIGHT) PART Nº WILL INCLUDE:			
Note: Flipper Base Plate (Right) comes threaded with all securing hardware (Thread Forming Screws) as listed under each of the Items which will get secured to it (Items **2**, **3**, **6** & **8**).			
2	Flipper Bat Bushing	1	545-5594-00
Item 2 is secured to Item 1 by: #6-32 X 3/8" HWH Swage (Ser.) Zc. (Qty. 3) (237-5976-02)			
3	Power (End of Stroke) Switch	1	180-5149-00
Item 3 is secured to Item 1 by: #6-32 X 5/8" HWH Swage (Ser.) Zc. (Qty. 2) (237-5976-04)			
4	Switch Plate/Spring Return Rt. Brkt.	1	535-7354-00
5	Flipper Return Spring	1	265-5035-00
6	Coil Stop Bracket Sub-Assembly	1	515-6308-01
Item 6 is secured to Item 1 by: #10-32 X 3/8" SHWH Swage (Serr) Zinc (Qty. 2) (237-5985-00) **and** #10 Split Lock Washer (Qty. 2) (244-5003-00)			
7	Spring Washer	1	269-5002-00
8	Coil Support Bracket	1	535-7356-00
Item 8 is secured to Item 1 by: #8-32 X 3/8" HWH Swage (Ser.) Zc. (Qty. 2) (237-5975-00)			
9	Coil, 22-1080 (YEL-GRN) (Right)	1	090-5032-00T
ORDERING ABOVE (ITEM 9) COIL PART Nº WILL INCLUDE:			
—	Diode, 1N4004 (positioned at top)	1	112-5003-00
10	Coil Sleeve	1	545-5388-00
11	Deflector Pad (Bumper)	1	545-5428-00

Nº	INDIVIDUAL PART NAME	QTY.	SPI PART Nº
12	Plunger, Link & Pawl (Rt.) Sub-Assy.	1	515-6518-00
ORDERING ABOVE (ITEM 12) SUB-ASSY. PART Nº WILL INCLUDE:			
12A	**Flipper Plunger/Link Sub-Assy.**	**1**	**515-6304-01**
includes :	*Plunger "Flipper" Link*	*1*	*545-5611-00*
includes :	*Spirol Pin ø 5/32" X 3/4" Lg.*	*1*	*251-5015-02*
includes :	*Flipper Plunger with "Flat"*	*1*	*530-5349-01*
®12B	**Pawl (Mntg. Link) (Rt.) Sub-Assy.**	**1**	**515-6305-00**
includes :	*Pawl (Mounting Link) (Rt.) Plain*	*1*	*535-7271-00*
includes :	*Switch Actuator*	*1*	*545-5612-00*
includes :	*Rivet, 1/8" ø X 1/4" Lg.*	*1*	*249-5003-00*
12C	**Return Bracket**	**1**	**535-7353-00**
12D	Flipper Link Bushing (Metal, Ext.) (.385" Lg. X .192" ID X .312" OD)	1	530-5139-01
12E	#10-32 X 1-1/4" Lg. Socket Head	1	237-5950-01
12F	#10-32 X 7/8" Lg. Socket Head	1	237-5966-00
12G	#10-32 Nylon Stop Nut	2	240-5203-00
12H	#10 Split Lock Washer	2	244-5003-00
12I	Washer .203" ID X .63" OD X .105" Thk w/cut	1	242-5039-01
12J	Washer .203" ID X .63" OD X .062" Thk	2	242-5038-00

Flipper (Right) Assembly (500-5944-04) is secured below the playfield by:
#10 X 1/2" HWH MS (Serr) Zinc ST (Qty. 8) (237-5949-00)

ASSOCIATED PARTS **ARE NOT INCLUDED** WITH THE ABOVE ASSEMBLY.

Nº	ASSOCIATED PART NAME	QTY.	SPI PART Nº
AP-A	White Flipper Bat & Shaft (Plain) (Non-Knurled End) Assembly	1	515-5133-08-06
	Large Flipper **BLACK** Rubber Ring	1	545-5277-00

Slingshot (Lwr. & Upr. Lt./Rt.) Assemblies, 500-5849-00 (Qty. 4) (Items 1-10)

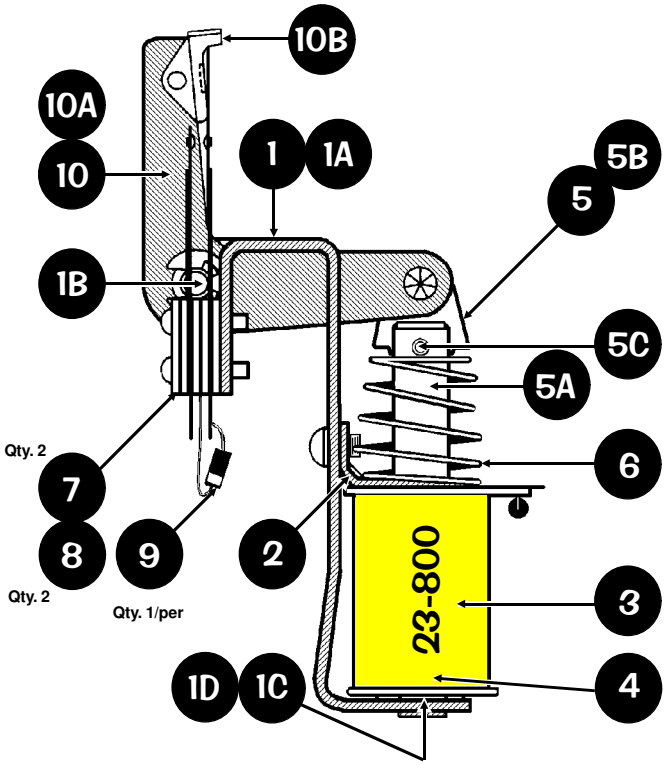

Take Note:

* An asterisk (*) indicates item(s) are not noted in the pictorials.

® "R" indicates item has a riveted-on part, if removing/adding rivets is not an option, order the entire ® Sub-Assembly.

Nº	INDIVIDUAL PART NAME	QTY.	SPI PART Nº
1	Slingshot Bracket Assembly	1	515-5339-01
2	Coil Retaining Bracket	1	535-5203-03
Item 2 is secured to Item 1A by: #8-32 X 3/8" PPH MS (Sems) (Qty. 2) (232-5301-00)			
3	Coil, 23-800	1	090-5001-00T
ORDERING ABOVE (ITEM 3) COIL PART Nº WILL INCLUDE:			
—	Diode, 1N4004 (positioned at top)	1	112-5003-00
4	Coil Sleeve	1	545-5031-00
5	Plunger & Link Assembly	1	515-5338-00
ORDERING ABOVE (ITEM 5) SUB-ASSY. PART Nº WILL INCLUDE:			
5A	Plunger 2" Lg.	1	530-5025-01
5B	Plunger Link	1	545-5293-00
5C	Roll Pin 1/8" ø x 5/8" Lg.	1	251-5008-00
Item 5B is secured to Item 10A by: Retaining Ring, 1/4" ø Shaft (Qty. 1) (270-5002-00)			

Nº	INDIVIDUAL PART NAME	QTY.	SPI PART Nº
6	Compression Spring	1	266-5020-00
7	Slingshot Stack (Blade) Switch	2	180-5054-00
8	Switch Body Protect Plate	2	535-5045-00
Items 7 & 8 are secured to Item 1A by: #6-32 X 5/8" HWH Swage (Qty. 4) (237-5976-04)			
9	Switch Diode, 1N4001	2	112-5001-00
10®	Riveted Arm & Tip Assembly	1	515-5340-01
ORDERING ABOVE ® RIVETED ASSY. PART Nº WILL INCLUDE:			
10A	Arm	1	515-5341-01
10B	Kicker Tip	1	545-5216-01
10C	Rivet, 1/8" ø x 1/4" Lg.	1	249-5003-00
Item 10A is secured to Item 1A by: Retaining Ring, 1/4" ø Shaft (Qty. 1) (270-5002-00)			

Slingshot Assemblies (500-5849-00) are secured below the playfield by:
#8 X 1/2" SHWH AB (Zinc) (Qty. 3/per) (234-5101-00)

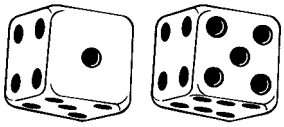

Turbo (Pop) Bumper Top Assy., 515-6459-01 (Qty. 3) (Items 1-7), Turbo (Pop) Bumper Bottom Assy., 515-6459-04 (Qty. 3) (Items 8-15), Turbo (Pop) Bumper Switch Assy., 515-6459-03 (Qty. 3) (Items 16-20)

and Associated Part(s): See Table Below (Item AP-A)

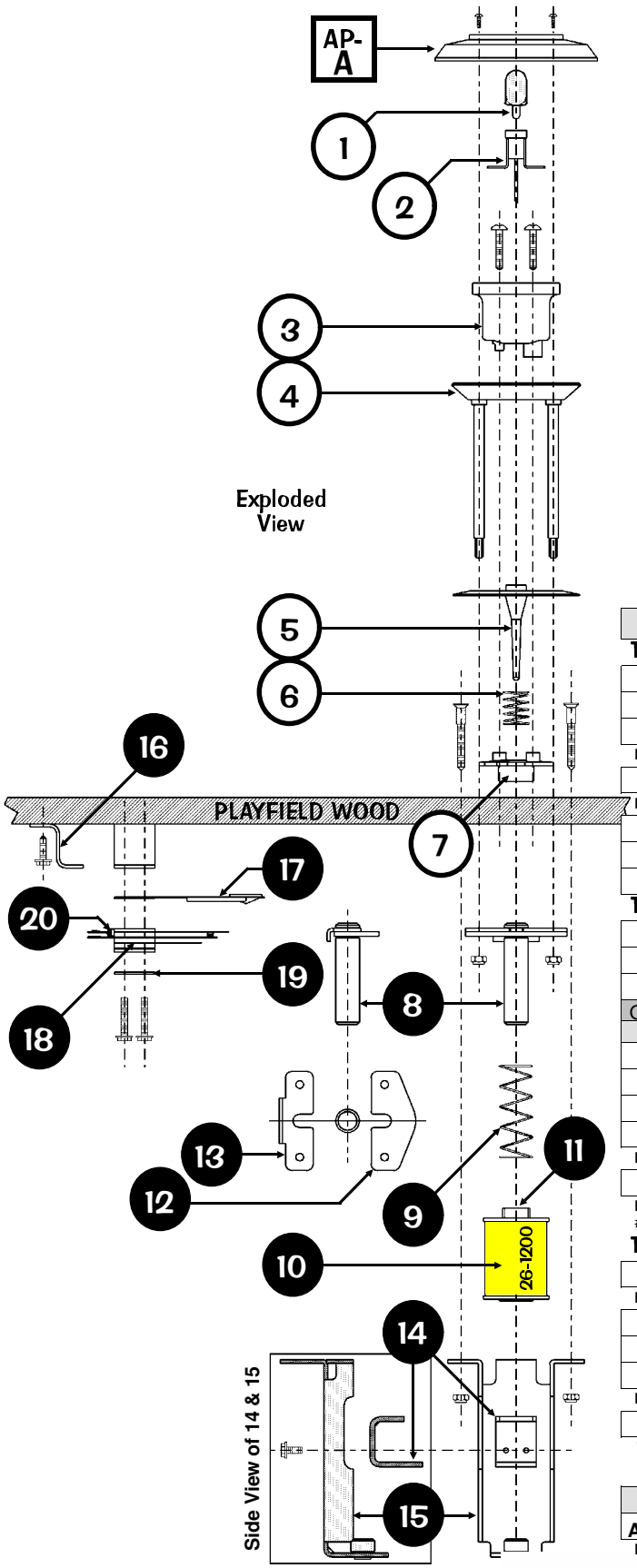

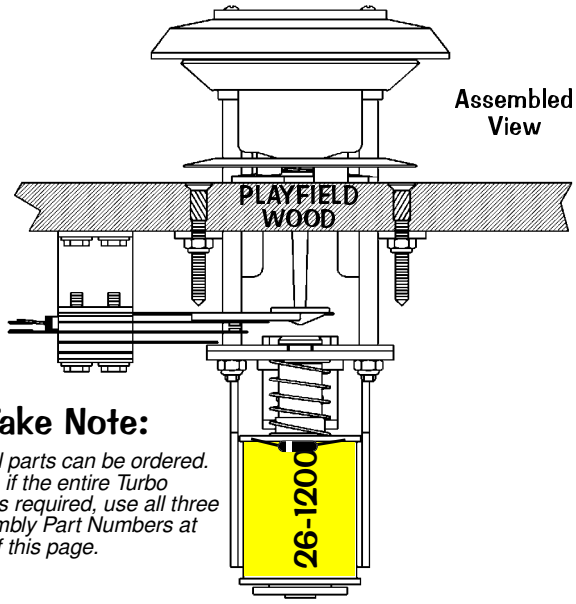

Take Note:

Individual parts can be ordered. However, if the entire Turbo Bumper is required, use all three (3) Assembly Part Numbers at the top of this page.

Nº	INDIVIDUAL PART NAME	QTY.	SPI PART Nº
Turbo Bumper Top Assy., 515-6459-01 (Items 1-7)			
1	#555 Wedge Base Bulb	1	165-5002-00
2	#555 Wedge Base Socket	1	077-5206-00
3	Bumper Body	1	545-5197-00
Item 3 is secured by: #5 X 7/8" PRH AB (Zinc) (Qty. 2) (237-5826-00)			
4	Ring Assembly	1	515-5085-00
Item 4 is secured by: #6-32 Nylon Stop Nut (Qty. 2) (240-5005-00)			
5	Bumper Skirt	1	545-5607-00
6	Bumper Skirt Compression Spring	1	266-5048-00
7	Bumper Base	1	545-5195-00
Turbo Bumper Bottom Assy., 515-6459-04 (Items 8-15)			
8	Plunger	1	530-5348-00
9	Coil Compression Spring	1	266-5047-00
10	Coil, 26-1200	1	090-5044-00T
ORDERING ABOVE (ITEM 10) COIL PART Nº WILL INCLUDE:			
—	Diode, 1N4004 (positioned at top)	1	112-5003-00
11	Coil Sleeve	1	545-5031-00
12	Fiber Yoke	1	545-5609-00
13	Metal Yoke	1	535-7346-00
14	Metal Yoke Stop	1	535-7347-00
Item 14 is secured by: #6-32 X 1/4" HWH Swage (Serr.) Zinc (Qty. 2) (237-5976-01)			
15	Coil Bracket Welded Assembly	1	515-5939-00
Item 15 is secured by: #6-32 X 1-3/16" Spiral Fin Shank (Qty. 3) (237-5957-00) **and** #6-32 Nylon Stop Nut (Qty. 3) (240-5005-00)			
Turbo Bumper Switch Assy., 515-6459-03 (Items 16-20)			
16	Switch Bracket	1	535-7342-00
Item 16 is secured by: #8 X 1/2" SHWH AB (Zinc) (Qty. 2) (234-5101-00)			
17	Spoon Switch Actuator	1	545-5610-01
18	Turbo Bumper Stack (Blade) Switch	1	180-5015-03
19	Switch Body Protect Plate	1	535-7344-00
Items 18 & 19 are secured by: #6-32 X 3/4" HWH Swage (Serr) Zc. (Qty. 2) (237-5976-05)			
20	Switch Diode, 1N4001	1	112-5001-00

The Top & Bottom Assemblies are secured together by hardware included in assemblies.

ASSOCIATED PART **IS NOT INCLUDED** WITH THE ABOVE ASSEMBLY.

Nº	ASSOCIATED PART NAME	QTY.	SPI PART Nº
AP-A	Turbo (Pop) Bumper Cap (Clear)	3	550-5057-01

Item AP-A is secured to Item 4 by: #4 X 3/4" PRH (Zinc) T-25 (Qty. 2/per) (237-5873-00)

4-Bank Drop Target (No Trip Coils) Assembly, 500-6345-24-65 (Items 1-22)

The Parts Table for this assembly is on the next page.

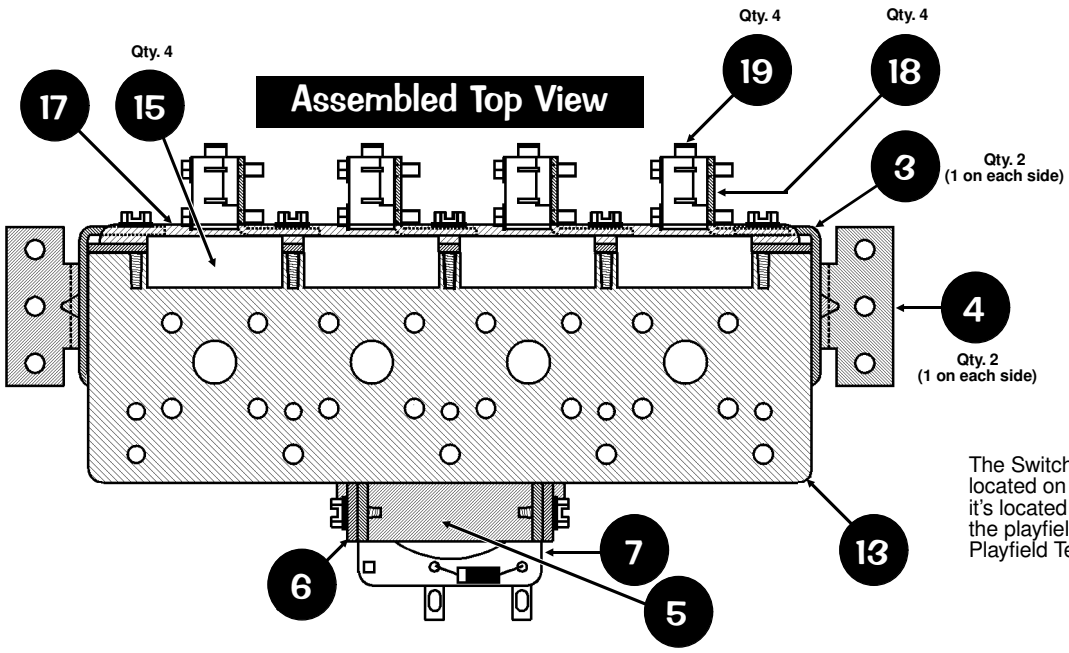

Take Note:

The Switch Diode, 1N4001, is not located on this assembly (nor included); it's located on a *Terminal Strip* under the playfield. See Section 5, Chapter 2, Playfield Terminal Strips..., Page 95.

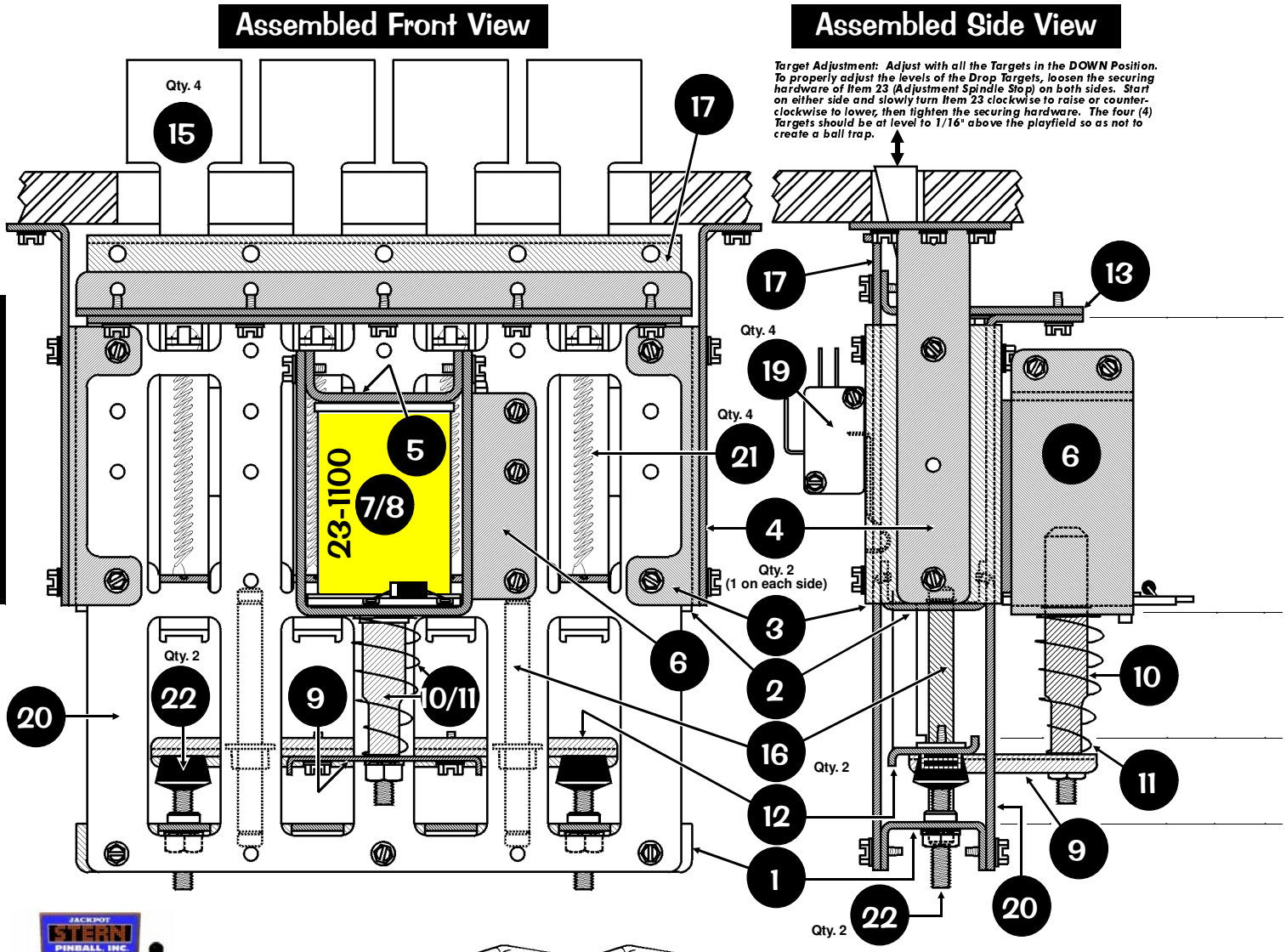

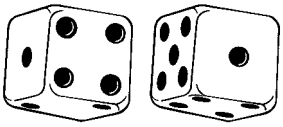

4-Bank Drop Target (No Trip Coils) Assembly, 500-6345-24-65 (Items 1-22)

Nº	INDIVIDUAL PART NAME	QTY.	SPI PART Nº
1	Guide Brkt. (4-Bank) ***with Pem Nuts***	1	515-6904-**04**
Item 1 is secured at the bottom and inbetween Items 17 & 21 by: See below Item 21.			
2	Guide Brkt. (4-Bank) ***without Pem Nuts***	1	535-8408-**04**
Item 2 is secured at the middle and inbetween Items 17 & 21 by: See below Item 21.			
3	Mounting Plate Housing Side	2	535-8415-00
Item 3 is secured at the both sides over Items 17 & 21 by: See below Item 21.			
4	Mounting Bracket Side (Short Feet)	2	535-8416-01
Item 4 is secured over Item 3 (on each side) by: See below Item 21.			
5	Coil Housing Stop Bracket Sub-Assy.	1	515-6905-00
Item 5 is secured over Item 7 inbetween Item 6 by: See below Item 21.			
6	Coil Housing Bracket	1	535-8411-00
Item 6 is secured on Item 21: See below Item 21.			
7	Coil, 23-1100	1	090-5030-00T
ORDERING ABOVE (ITEM 7) COIL PART Nº WILL INCLUDE:			
—	Diode, 1N4004 (positioned at top)	1	112-5003-00
8	Coil Sleeve	1	545-5709-00
9	Plunger Lift Bracket	1	535-8413-00
Item 9 is secured under Item 12: #10-32 X 3/8" SHWH (Ser) Swage (Qty. 2) (237-5985-00)			
10	Drive Coil Plunger	1	530-5522-00
Item 10 is secured under Item 9: #10-32 Nylon Stop Nut (Qty. 1) (240-5203-00) **and over Item 9:** #10 Lock Washer (Qty. 1) (246-5002-00)			
11	Compression Spring	1	266-5020-00
12	Reset/Stop Bracket Assy. (4-Bank)	1	515-6903-**04**

Nº	INDIVIDUAL PART NAME	QTY.	SPI PART Nº
13	Trip Coil Mounting Bracket (4-Bank)	1	535-8410-**04**
Item 13 is secured at the top of Items 17 & 21 by: See below Item 21.			
14	**Coil (Trip) NOT USED IN THIS ASSEMBLY.**		
15	Drop Target White (Rollover)	**4**	545-5533-01
16	Drop Target Guide Shaft	2	530-5521-00
Item 16 is secured to Items 1 & 2 by: Retaining Ring, 1/4" ø (Qty. 2/per) (270-5002-00)			
17	Switch Support Bracket (4-Bank)	1	535-8407-**04**
Item 17 is secured to Items 1, 2 & 13 by: See below Item 21.			
18	Switch Bracket	**4**	535-8414-00
Item 18 is secured to Item 17 by: See below Item 21.			
19	Switch (D/T)	**4**	180-5158-00
Item 19 is secured to Item 18 by: #4-40 X 5/8" HWH MS (Ser) Zc. (Qty. 2/per) (237-5945-00)			
20	Spring Support Bracket (4-Bank)	1	535-8420-**04**
Items 1-6, 13, 17, 18 & 20 are secured by: #8-32 X 3/8" HWH MS Type C (237-5903-00) ***Item 3*** *= 8* ***Item 4*** *= 4* ***Item 5*** *= 4* ***Item 6*** *= 3* ***Item 13*** *= 6* ***Item 17*** *= 4* ***Item 18*** *= 8* ***Item 20*** *= 3*			
21	Spring (D/T Reset)	**4**	265-5003-00
22	#10-32 Adj. Spindle Stop w/Rubber Tip	**2**	280-5014-00
Item 22 is secured by: #10-32 Keps Nut (Qty. 1/per) (240-5208-00)			

4-Bank Drop Target Assembly (500-6345-24) is secured under the playfield by: #8-32 X 1/2" SHWH AB (Zinc) (Qty. 6) (234-5101-00)

Individual Views of Hard-To-See Items

Side Views (Side Views are on the same horizontal line with the Assembled Side View on the previous page.)

Front Views (Views are "cut" to fit page & are on same the horizontal line with the Assembled Side View on the previous page.)

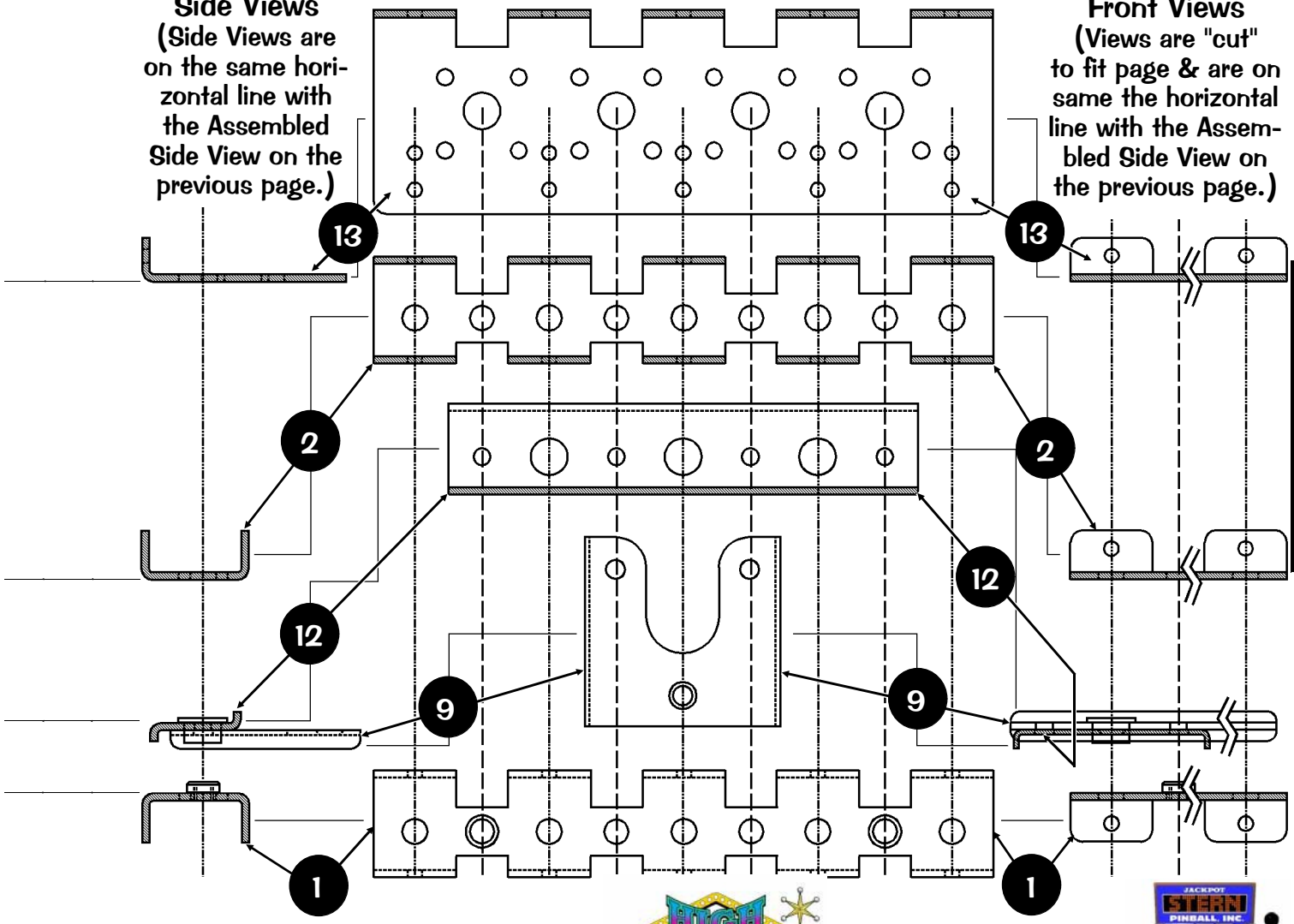

Ball Lock (Short Plunger) Assembly, 500-5867-02-65 (Items 1-8)
(Located below the Mini-Magnet, under the Roulette Wheel, Upper Right Corner of the Playfield.)

Usage Note: This Ball Lock (Short) Assembly, 500-5867-02-65, is similiar to the Ball Lock (Long) Assembly, 500-5788-03-65.

The only difference is Item 6.

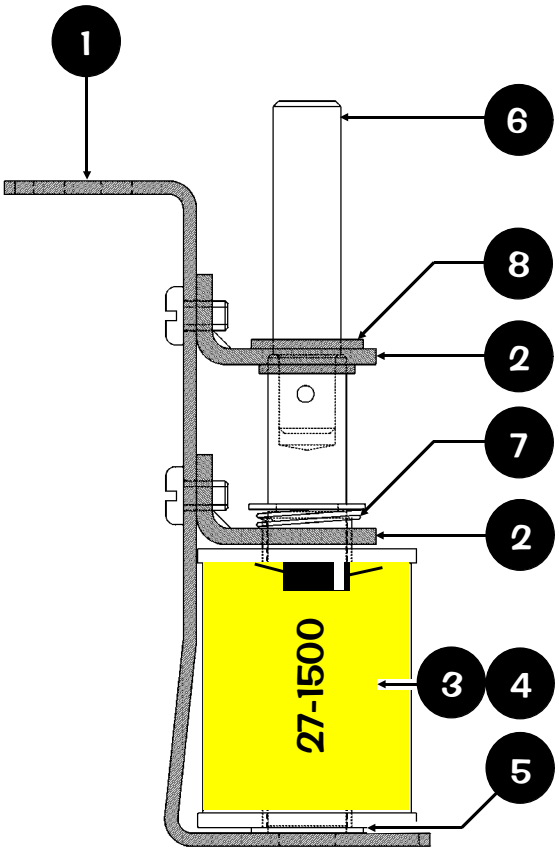

Nº	INDIVIDUAL PART NAME	QTY.	SPI PART Nº
1	Ball Lock Mounting Bracket Assy.	1	515-7132-00
2	Coil Retaining Bracket	2	535-5203-03
Item 2 is secured by: #8-32 X 1/4" PPH MS (Sems) Zinc (Qty. 2/per) (232-5300-00)			
3	Coil, 27-1500	1	090-5004-00T
ORDERING ABOVE (ITEM 3) COIL PART Nº WILL INCLUDE:			
—	Diode, 1N4004 (positioned at top)	1	112-5003-00

Nº	INDIVIDUAL PART NAME	QTY.	SPI PART Nº
4	Coil Sleeve	1	545-5411-00
5	Spring Washer (17/32" ID X 3/4" X 1")	1	269-5002-00
6	Solid Plunger Assy. (Short)	1	515-6119-02
7	Compression (Relay) Spring	1	266-5020-00
8	Nyliner 7/16" Shaft (7L2-FF)	1	545-5418-01

Ball Lock (Short Plunger) Assembly (500-5867-02-65) is secured under the playfield by:
#8-32 X 1/2" SHWH AB (Zinc) (Qty. 3) (234-5101-00)

Ball Lock (Long Plunger) Assembly, 500-5867-03-65 (Items 1-8)
(Located under the Wire Ramp on the Right Side of the Playfield.)

Usage Note: This Ball Lock (Long) Assembly, 500-5867-03-65, is similiar to the Ball Lock (Short) Assembly, 500-5788-02-65.

The only difference is Item 6.

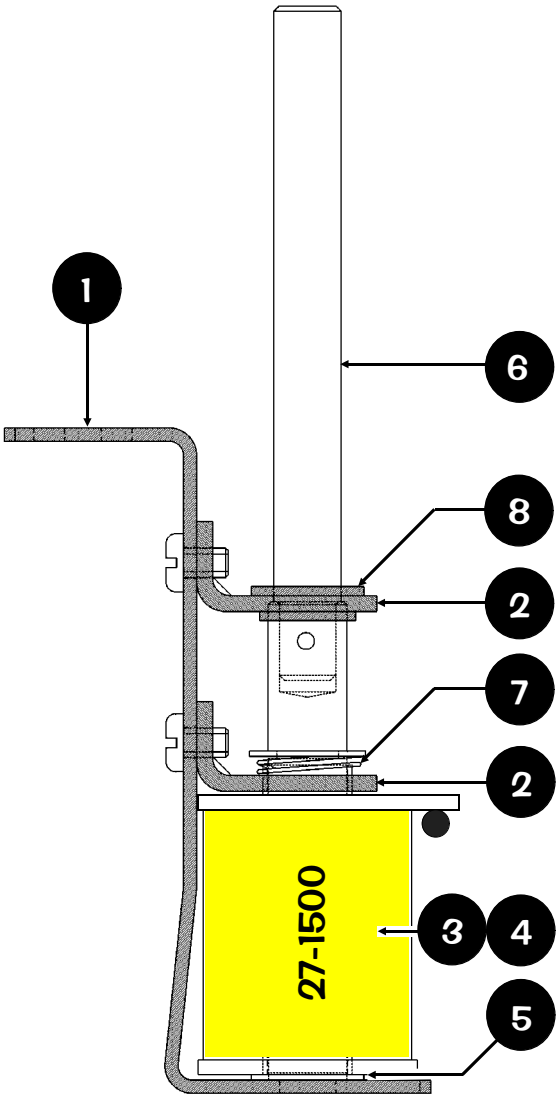

Nº	INDIVIDUAL PART NAME	QTY.	SPI PART Nº
1	Ball Lock Mounting Bracket Assy.	1	515-7132-00
2	Coil Retaining Bracket	2	535-5203-03
Item 2 is secured by: #8-32 X 1/4" PPH MS (Sems) Zinc (Qty. 2/per) (232-5300-00)			
3	Coil, 27-1500	1	090-5004-00T
ORDERING ABOVE (ITEM 3) COIL PART Nº WILL INCLUDE:			
—	Diode, 1N4004 (positioned at top)	1	112-5003-00

Nº	INDIVIDUAL PART NAME	QTY.	SPI PART Nº
4	Coil Sleeve	1	545-5411-00
5	Spring Washer (17/32" ID X 3/4" X 1")	1	269-5002-00
6	Solid Plunger Assy. (Long)	1	515-6119-03
7	Compression (Relay) Spring	1	266-5020-00
8	Nyliner 7/16" Shaft (7L2-FF)	1	545-5418-01

Ball Lock (Short Plunger) Assembly (500-5867-03-65) is secured under the playfield by:
#8-32 X 1/2" SHWH AB (Zinc) (Qty. 3) (234-5101-00)

Shooter Plastic Ramp Individual Parts Only (Items 1-11)

Drawing & Parts Table continues on the next page.

For how this Ramp is Secured to the Playfield see the Securing Hardware @ the bottom of the next page.

Take Note:

* An asterisk (*) indicates item(s) are not noted in the pictorials.

® "R" indicates item has a riveted-on part, if removing/adding rivets is not an option, order the entire ® Sub-Assembly.

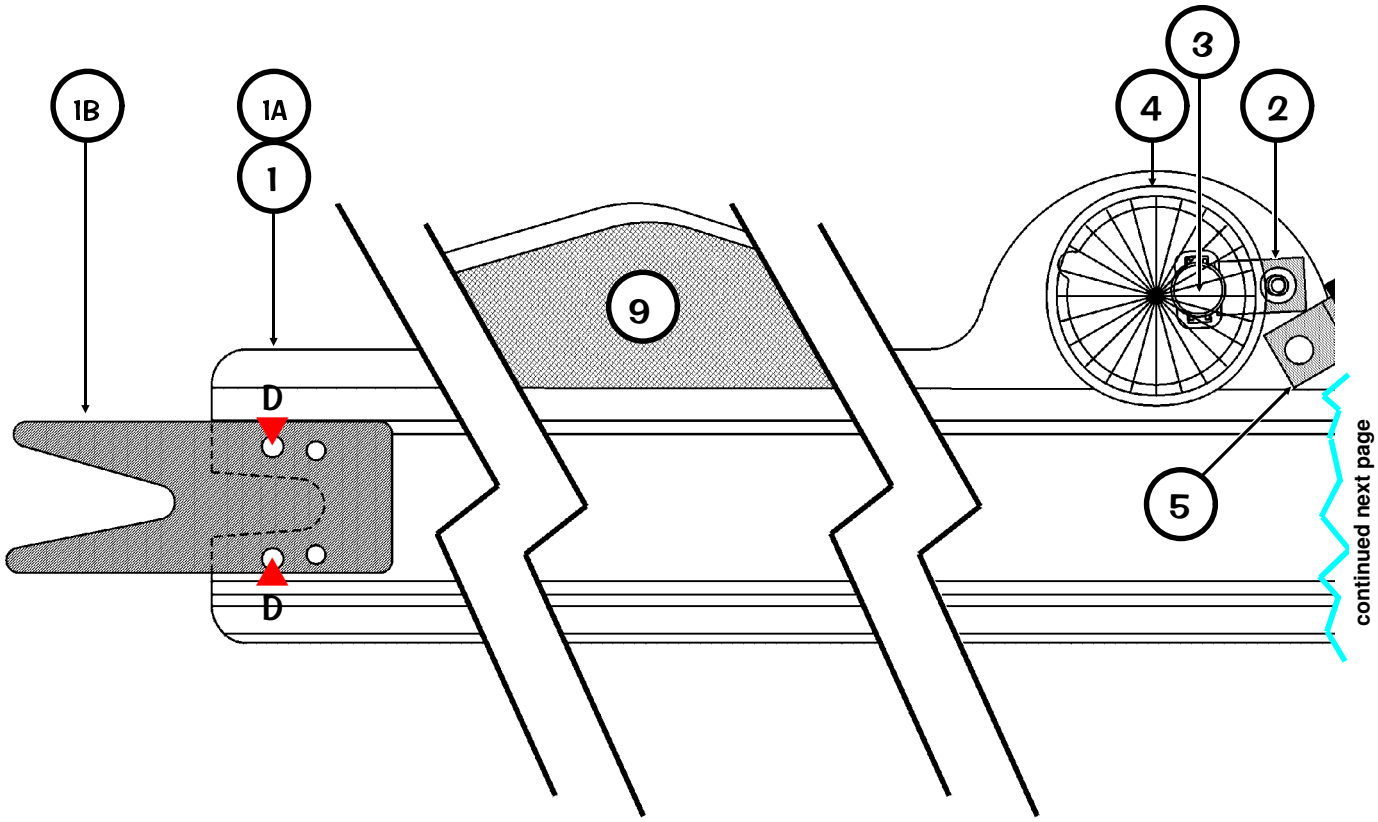

Nº	INDIVIDUAL PART NAME	QTY.	SPI PART Nº
1®	Roulette Ramp Riveted Sub-Assy.	1	**515-7117-00R-65**
ORDERING ABOVE ® RIVETED ASSY. PART Nº WILL INCLUDE:			
1A	Shooter Plastic Ramp (No Parts)	1	545-5957-00
1B	Ramp Flap	1	535-8736-00
1C	Rivet, 1/8" ø X 3/16" Lg.	2	249-5001-00
1D*	#6 - Riveting Lock Washer **(for Item 1B)**	2	246-5000-00
2	#555 Wedge Base Socket (Offset)	1	077-5029-0
Item 2 is secured by: Rivet, 1/8" ø X 3/16" Lg. (Qty. 1) (249-5001-00)			

Nº	INDIVIDUAL PART NAME	QTY.	SPI PART Nº
3	#906 Wedge Base Bulb (Clear)	1	165-5004-00
4	Mini-Mars Light Cover (Snap-In) Red	1	550-5030-02
5	#555 Wedge Base Socket (Laydown)	1	077-5026-01
Item 5 is secured by: #6 X 1/2" PTH A (Zinc) (Qty. 1) (237-5809-00)			
6	#555 Wedge Base Bulb (Clear)	1	165-5002-00
7	Light Deflector (Silver Plastic)	1	545-5409-01
8	#6 X 1/2" PTH A (Zinc)	1	237-5809-00

Shooter Plastic Ramp Individual Parts Only (Items 1-11) Continued

Drawing & Parts Table continues on previous page.

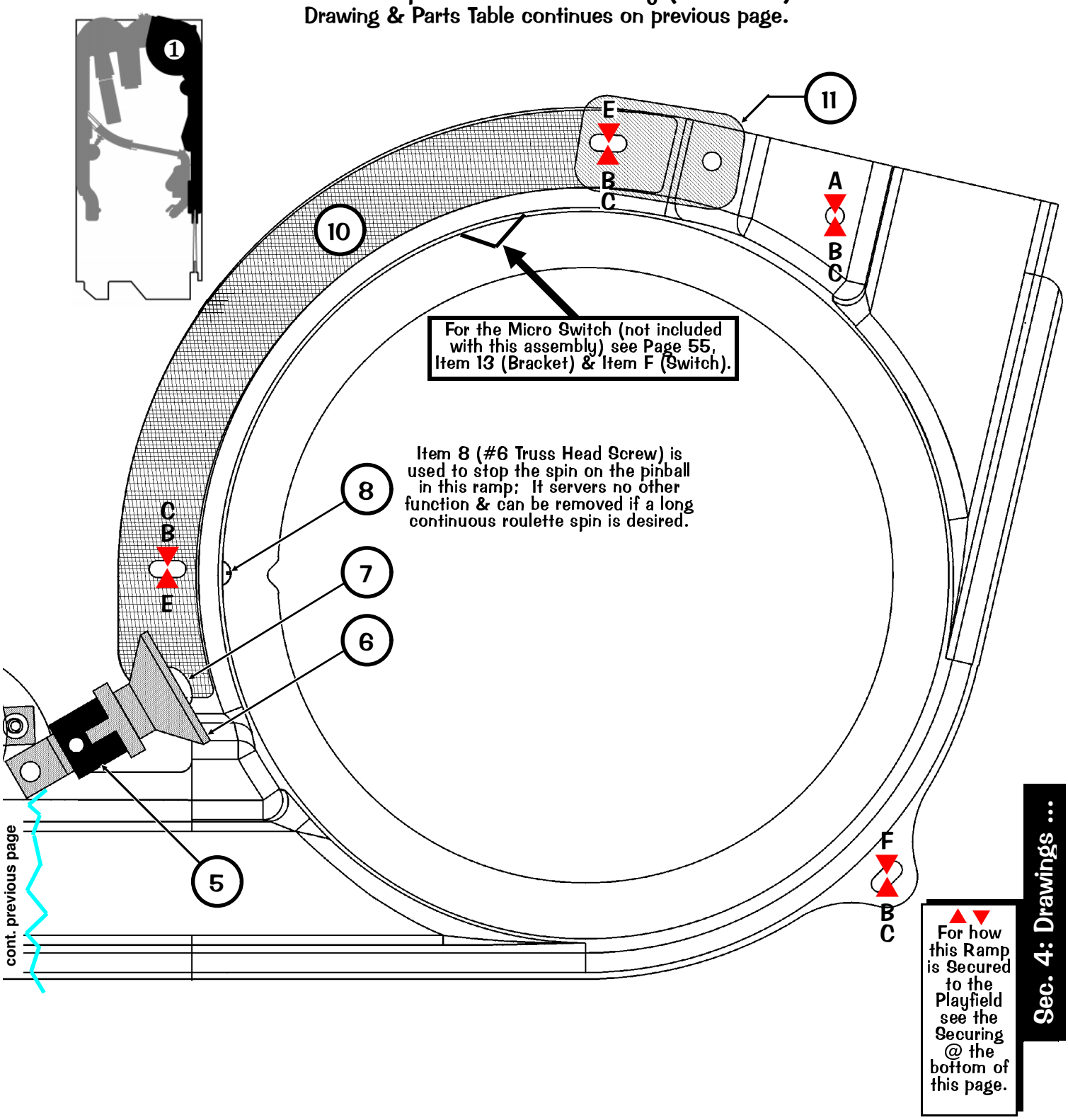

Nº	INDIVIDUAL PART NAME	QTY.	SPI PART Nº
9	Decal -38 **(from Decal Sheet Set)**	1	820-6260-XX
10	Decal -40 **(from Decal Sheet Set)**	1	

Decals & Plastic Pieces are a part of a Complete Set (Part Number ending in -XX). Individuals pieces are typically not available and the whole set must be ordered. See Sec. 4, Chp. 1, Parts Identification & Location, Page 57 for more details.

11	Sm. Plastic -08 **(from Clear Plas. Sheet Set)**	1	830-5979-XX

Item 11 is secured at the top hole by: #6 X 1/2" PTH A (Zinc) (Qty. 1) (237-5809-00)

Shooter Plastic Ramp is secured above the playfield by:

A▼ 5/8" X 1/4" Hex Spacer #6-32 Tap (Qty. 1) (254-5008-02)
B▲▼ #6-32 X 3/8" PPH MS (Sems) Zinc (Qty. 4) (232-5201-00)
C▲▼ #6 Washer (Qty. 4) (242-5001-00)
D▲▼ #4 X 5/8" PFH (Black) (Qty. 2) (237-5833-00)
E▲▼ 2-1/4" X 1/4" Hex Spacer #6-32 Tap (Qty. 2) (254-5008-18)
F▼ 3-1/2" X 1/4" Hex Spacer #6-32 Tap (Qty. 1) (254-5008-27)

Roulette Wheel Individual Parts Only (Items 1-12)

(Works in conjunction with parts on next page.)

Nº	INDIVIDUAL PART NAME	QTY.	SPI PART Nº
1	Spindle Handle Assembly	1	515-7110-00
2	#10 Lock Washer	1	246-5002-00
3	#10 Washer, 7/32" ID X 1/2" OD X 1/16" Thk.	1	242-5003-00
4	Spinner Island	1	545-5956-00
5	Spinner Plate	1	515-7131-00
6	Spinner Platform	1	535-8763-00
7	Nyliner Bearing (Thomson #8L2-FF)	1	545-5964-00
8	Washer, .515" ID X .88" OD X .03" Thk	1	242-5064-00
9	Shaft	1	530-5569-00
10	Retaining (E-) Ring, 1/2" ø Shaft	1	270-5021-00
11	#8-32 X 3/8" HWH MS Type C	1	237-5903-00
12	Decal -44 **(from Decal Sheet Set)**	1	820-6260-XX

Decals Pieces are a part of a Complete Set (Part Number ending in -XX). Individuals pieces are typically not available and the whole set must be ordered. See Sec. 4, Chp. 1, Parts Identification & Location, Page 57 for more details.

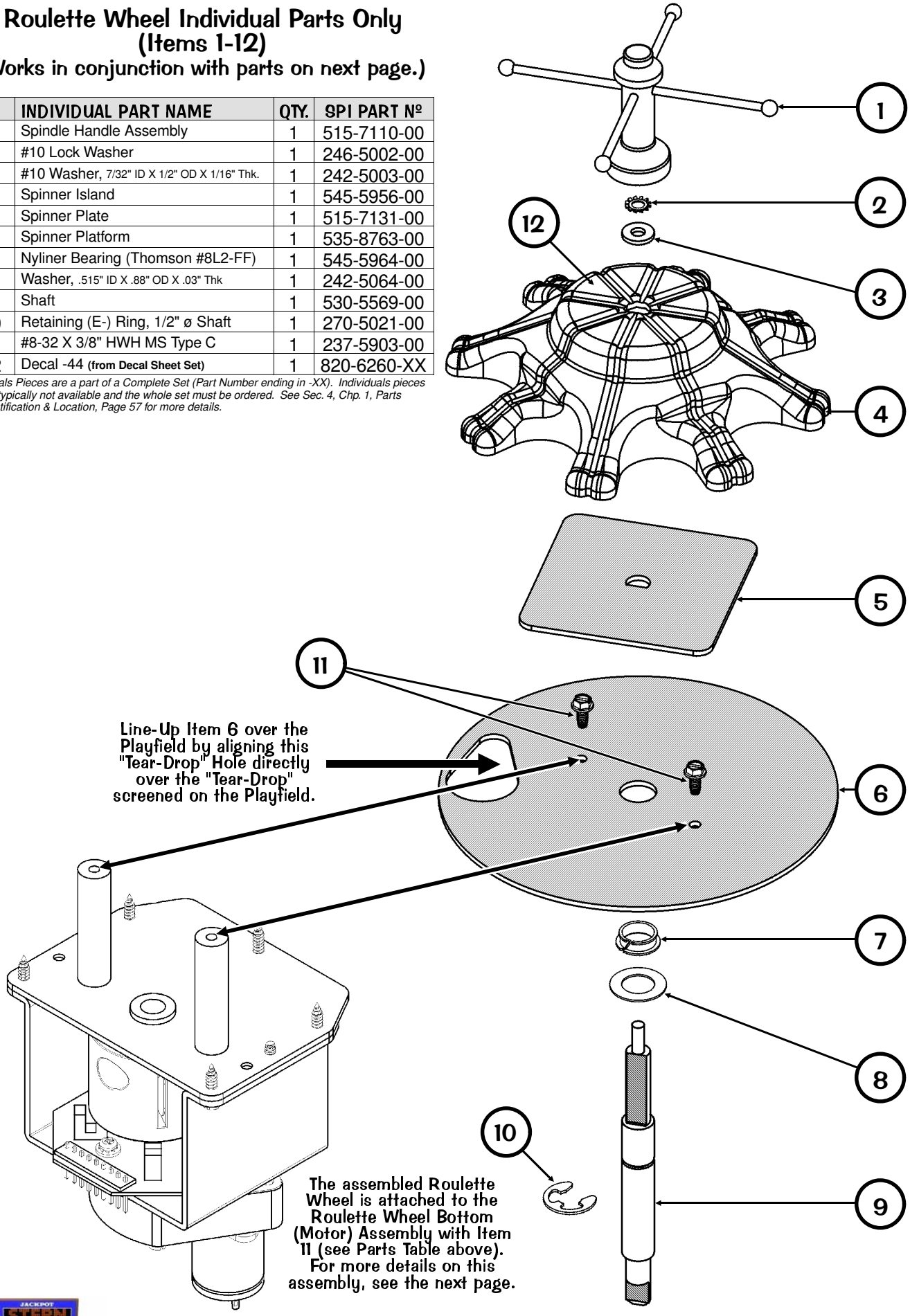

Roulette Wheel Bottom (Motor) Individual Parts Only (Items 1-10)

(Works in conjunction with parts on previous pg.)

Production Note: *Item 2, Spring Plate, may vary in quantity from game to game; replace with the quantity used in your game (e.g. If your game has 1, replace with ONLY 1; if your game has 2, replace with 2).*

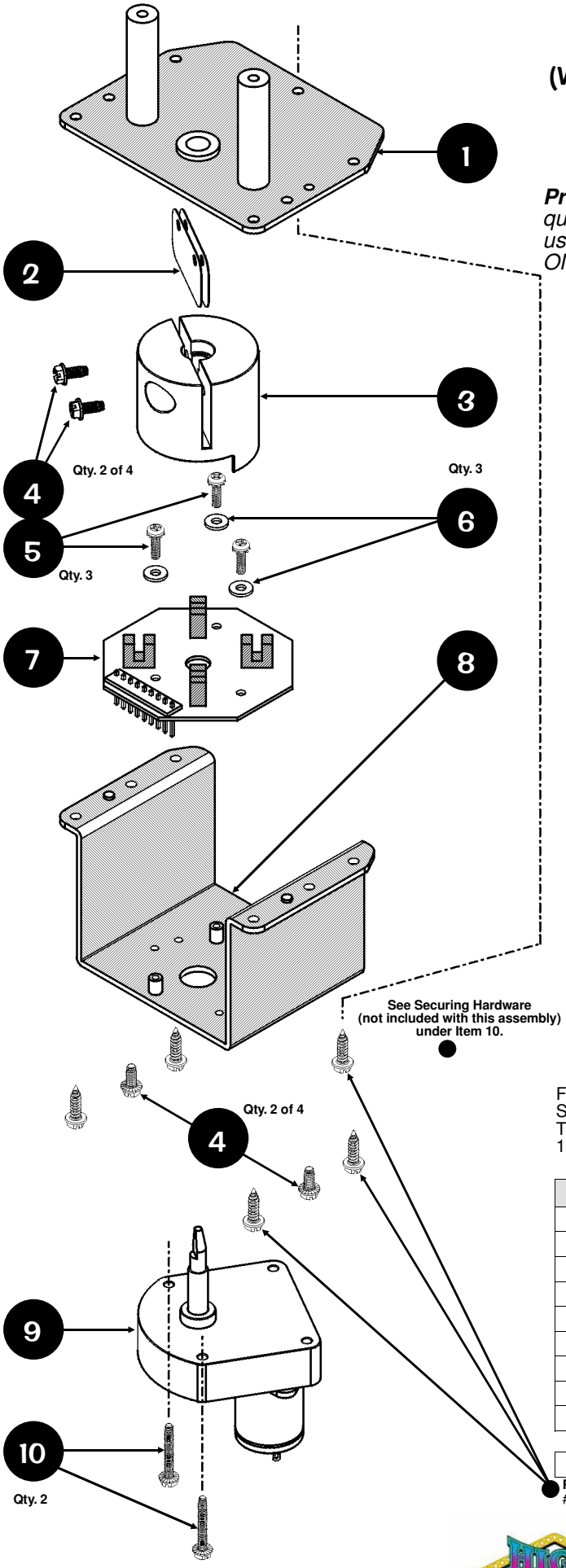

Take Note:

For a break-down of parts on this OPTO Board (520-5194-01), see Section 5, Chapter 4, 4-Position OPTO PC Board (Roulette Motor) Theory of Operation & Schematic, Component Layout & Parts, Pages 130-131.

Nº	INDIVIDUAL PART NAME	QTY.	SPI PART Nº
1	Base Plate	1	515-7129-00
2	Spring Plate **(see Production Note above)**	1/2	535-8764-00
3	Coupling / Interaupter	1	530-5570-00
4	#8-32 X 3/8" HWH MS Type C	4	237-5903-00
5	#6-32 X 1/2" PPH (Sems) Zinc	3	232-5202-00
6	#6 Washer	3	242-5001-00
7	4-Position OPTO PC Board	1	520-5194-01
8	Motor Platform	1	515-7130-00
9	Motor & Soldered Cable Wiring Hrns.	1	515-7153-00
	Item 9 Motor Specs: 17RPM 20V DC CCW (Multi) (041-5078-00)		
10	#6-32 X 1" HWH Slotted Serr Tri-Point	2	237-6050-00

Roulette Wheel Bottom (Motor) is secured under the playfield by:
#8 X 5/8" HWH AB (Zinc) Green (Qty. 5) (234-5102-04)

Main Plastic Ramp Individual Parts Only (Items 1-29)

(Drawing continues on the next page.)

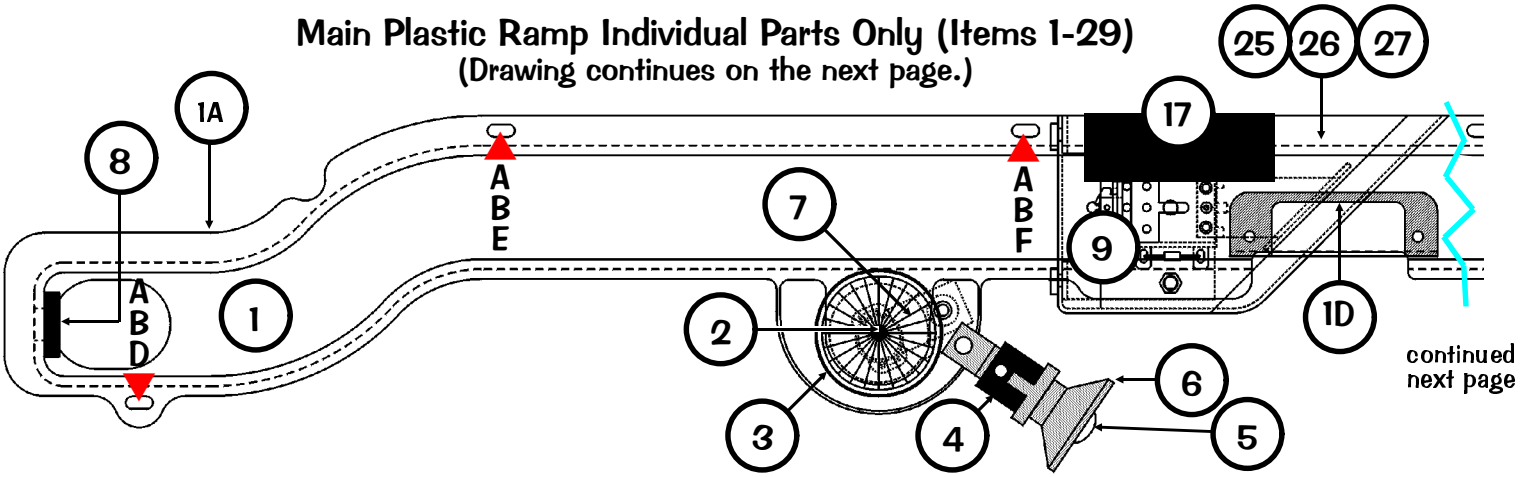

continued next page

Take Note:

* An asterisk (*) indicates item(s) are not noted in the pictorials.

® "R" indicates item has a riveted-on part, if removing/adding rivets is not an option, order the entire ® Sub-Assembly.

Nº	INDIVIDUAL PART NAME	QTY.	SPI PART Nº
1®	Main (Left) Ramp Riveted Sub-Assy.	1	**515-7118-00R-65**
ORDERING ABOVE ® RIVETED ASSY. PART Nº WILL INCLUDE:			
1A	Main Plastic Ramp (No Parts)	1	545-5954-00
1B	Ramp Flap (Left)	1	535-8742-00
1C	Ramp Flap (Right)	1	535-8768-00
1D	Ramp Mounting Bracket	1	535-7817-00
1E	Spring Plate	2	535-8764-00
1F*	Rivet, 1/8" ø X 3/16" Lg.	10	249-5001-00
1G*	#6 - Riveting Lock Wshr. **(for Items 1BCE)**	8	246-5000-00
2	#906 Wedge Base Bulb (Clear)	1	165-5004-00
3	Mini-Mars Light Cover (Snap-In) Red		550-5030-02
4	#555 Wedge Base Socket (Laydown)	2	077-5026-01
Item 4 is secured by: #6 X 1/2" PTH A (Zinc) (Qty. 1/per) (237-5809-00)			
5	#555 Wedge Base Bulb (Clear)	2	165-5002-00
6	Light Deflector (Silver Plastic)	2	545-5409-01
7	#555 Wedge Base Socket (Offset)	1	077-5029-00
Item 7 is secured by: Rivet, 1/8" ø X 3/16" Lg. (Qty. 1) (249-5001-00)			
8	Rubber Flange (Bumper)	1	545-5965-00
9	Coil 27-1500 Bracket Assembly	1	515-6596-00
Item 9 is secured by: #6-32 X 1/2" PPH MS (Sems) Zinc (Qty. 2) (232-5202-00) **and** #6-32 Nylon Stop Nut (Qty. 2) (240-5010-00) ***For Individual Items use :*** *Coil 27-1500 (Qty. 1) (**090-5004-00T**), Return Spring (Qty. 1) (Jaidninger #SPR29-18) (**266-5024-00**) or #8-32 X 3/8" PPH MS Zinc (Qty. 1) (**232-5301-00**).*			
10	Transition Flap	1	535-8757-00
11	Micro Switch Bracket	1	535-7319-05
Items 10 & 11 are secured by: #4-40 X 3/8" PFH (Black) (Qty. 2/per) (237-5983-00) **and** #4-40 Nylon Stop Nut (Qty. 2/per) (240-5303-00)			
12	Micro Switch	1	180-5093-00
13	Switch Body Protect Plate	1	535-6539-00
Items 12 & 13 are secured to Item 11 by: #2-56 X 1/2" HWH Ser (Qty. 2) (237-5937-02)			
14*	Diode, 1N4004	1	112-5003-00
15*	Clear Dot Self-Adhesive	1	280-5012-00
16	Cover Plate	1	535-8758-00
Item 16 is secured by: #6 X 1/2" PTH A Zinc (Qty. 4) (237-5809-00)			
17	Diverter Cover (Black Plastic)	1	545-5740-01
Item 17 is secured by: #6-32 X 3/8" HWH Swage (Serr) Zinc (Qty. 2) (237-5976-02)			

Nº	INDIVIDUAL PART NAME	QTY.	SPI PART Nº
18	Shaft for Middle Diverter	1	530-5568-00
19	Diverter Gate	1	535-8743-01
20	6-32 X 1/4" PFH MS Zinc 82 Undercut	4	237-5871-01
21	Plastic -06 **(from Clear Plastic Sheet Set)**	1	830-5979-XX
Item 21 is secured by: #6 X 1/2" PTH A (Zinc) (Qty. 3) (237-5809-00)			
22	Gate (Roll-Under) Assembly	1	515-6556-02
ORDERING ABOVE (ITEM 22) SUB-ASSY. PART Nº WILL INCLUDE:			
22A	Gate Bracket	1	535-7756-02
22B	Wire Form (on above item)	1	535-7755-02
22C	Micro Switch (for Roll-Under Gate)	1	180-5087-00
22D*	Switch Body Protect Plate	1	535-6539-00
22E*	Diode, 1N4004	1	112-5003-00
22F*	#2-56 X 1/2" HWH Ser UNS #4HD TR3 BO	2	237-5937-02
23	Gate (Roll-Under) Assy. (Gold, 1-1/2")	1	515-6490-07
ORDERING ABOVE (ITEM 23) SUB-ASSY. PART Nº WILL INCLUDE:			
23A	Gate Bracket	1	535-8461-00
23B	Wire Form (on above item)	1	535-7755-02
23C	Micro Switch (for Roll-Under Gate)	1	180-5087-00
23D*	Switch Body Protect Plate	1	535-6539-00
23D*	Diode, 1N4004	1	112-5003-00
23E*	#2-56 X 1/2" HWH Ser UNS #4HD TR3 BO	2	237-5937-02
Items 22-23 are secured by: #6 X 1/2" PTH A (Zinc) (Qty. 2/per) (237-5809-00)			
24	Ramp Decal **(Individual Decal, Not In A Set)**	1	820-6281-00
25	Decal -26 **(from Decal Sheet Set)**	1	820-6260-XX
26	Decal -27 **(from Decal Sheet Set)**	1	
27	Decal -28 **(from Decal Sheet Set)**	1	
28	Decal -29 **(from Decal Sheet Set)**	1	
29	Decal -45 **(from Decal Sheet Set)**	1	

Decals & Plastic Pieces are a part of a Complete Set (Part Number ending in -XX). Individuals pieces are typically not available and the whole set must be ordered. See Sec. 4, Chp. 1, Parts Identification & Location, Page 57 for more details.

Main Plastic Ramp is secured above the playfield by:

A▲▼ #6-32 X 3/8" PPH MS (Sems) Zinc (Qty. 4) (232-5201-00)
B▲▼ #6 Washer (Qty. 4) (242-5001-00)
C▲▼ #4 X 5/8" PFH (Black) (Qty. 2) (237-5833-00)
D▼ 1-3/4" X 1/4" Hex Spacer #6-32 Tap (Qty. 1) (254-5008-10)
E▲ 2" X 1/4" Hex Spacer #6-32 Tap (Qty. 1) (254-5008-07)
F▲ 2-1/8" X 1/4" Hex Spacer #6-32 Tap (Qty. 3) (254-5008-32)
G▲▼ 2" X 3/8" Hex Spacer #6-32 Tap (Qty. 2) (254-5008-28)

*Note: Items E & F are mounted on Ramp Mounting Brackets (**515-6508-00**)* on the wood rail.

Main Plastic Ramp Individual Parts Only (Items 1-29) Continued

Drawing continues & Parts Table on previous page.

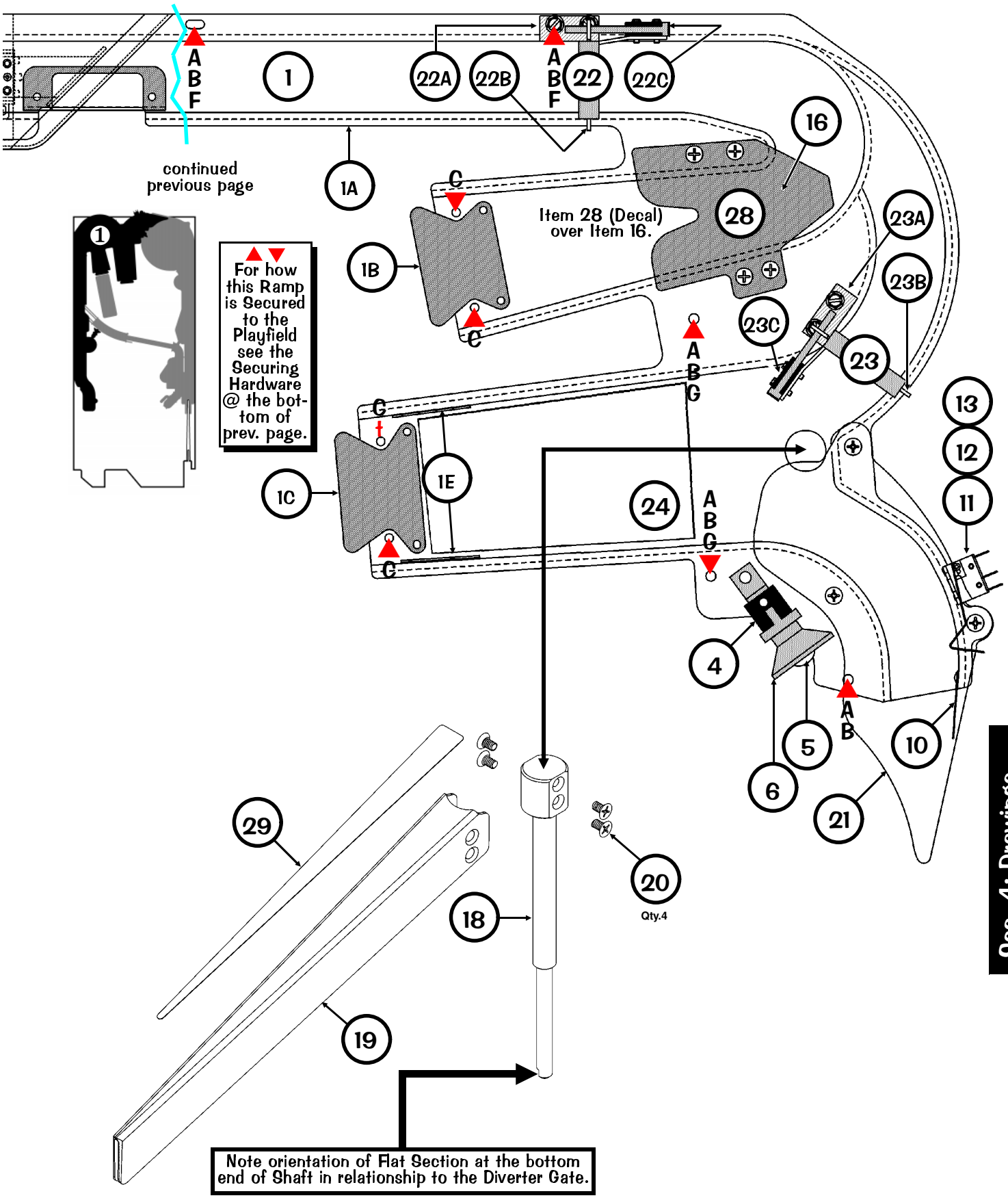

Diverter Assembly, 500-6441-04-65 (Items 1-9)

(Located under the playfield below the Main Plastic Ramp; works with Diverter on previous pages.)

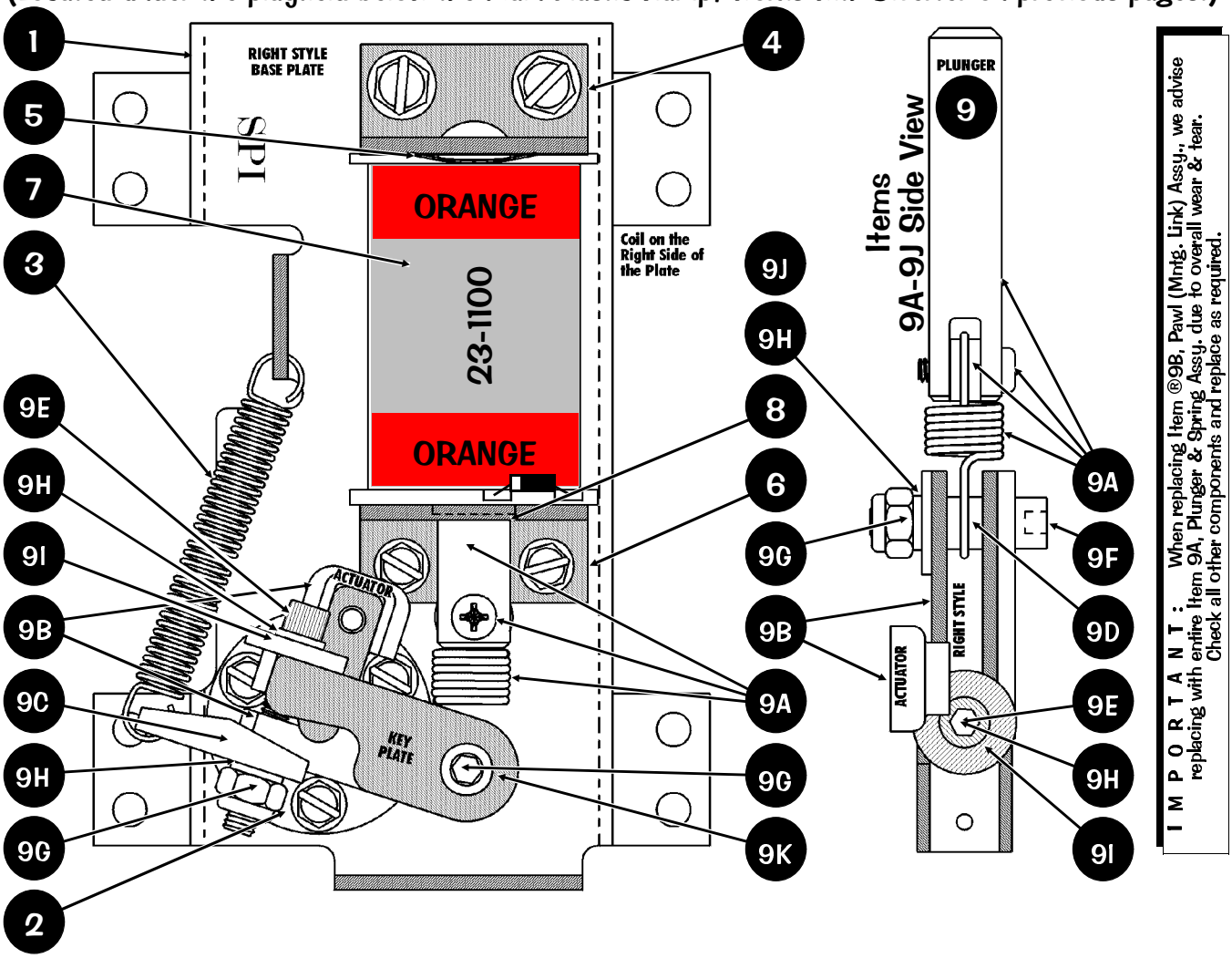

Take Note:

* An asterisk (*) indicates item(s) are not noted in the pictorials.

® "R" indicates item has a riveted-on part, if removing/adding rivets is not an option, order the entire ® Sub-Assembly.

Nº	INDIVIDUAL PART NAME	QTY.	SPI PART Nº
1	Diverter Base Plate Kit (Right Style)	1	515-6617-04
ORDERING ABOVE (ITEM 1) KIT (RIGHT) PART Nº WILL INCLUDE:			
Note:	Diverter Base Plate (Right Style) comes threaded with all securing hardware (Thread Forming Screws) as listed under each of the Items which will get secured to it (Items **2**, **4** & **6**).		
2	"Flipper" Bat Bushing	1	545-5594-00
Item 2 is secured to Item 1 by: #6-32 X 3/8" HWH Swage (Ser.) Zc. (Qty. 3) (237-5976-02)			
3	Spring (Large, Heavy-Duty)	1	266-5066-01
4	Coil Stop Bracket Sub-Assembly	1	515-6308-01
Item 4 is secured to Item 1 by: #10-32 X 3/8" SHWH Swage (Serr) Zinc (Qty. 2) (237-5985-00) **and** #10 Split Lock Washer (Qty. 2) (244-5003-00)			
5	Spring Washer	1	269-5002-00
6	Coil Support Bracket	1	535-7356-00
Item 6 is secured to Item 1 by: #8-32 X 3/8" HWH Swage (Ser.) Zc. (Qty. 2) (237-5975-00)			
7	Coil, 23-1100 (ORG)	1	090-5030-00T
ORDERING ABOVE (ITEM 7) COIL PART Nº WILL INCLUDE:			
—	Diode, 1N4004 (positioned at top)	1	112-5003-00
8	Coil Sleeve	1	545-5388-00

Nº	INDIVIDUAL PART NAME	QTY.	SPI PART Nº
9	Plunger, Spring & Pawl Sub-Assy.	1	515-7133-00-65
ORDERING ABOVE (ITEM 9) SUB-ASSY. PART Nº WILL INCLUDE:			
9A	**Plunger & Spring Sub-Assy.**	**1**	**515-7134-00-65**
includes :	*Plunger 2-1/4"*	*1*	*530-5025-03*
includes :	*Spring*	*1*	*266-5064-00*
includes :	*Spacer*	*1*	*254-5000-18*
includes :	*#6-32 X 1/2" PPH (MS) TF*	*1*	*237-5842-00*
Note	*: Apply Loctite 243 Blue to threads; Tighten to 20lbs. +/- 3 In-lbs.*		
® 9B	**Pawl (Mntg. Link) (Rt.) Sub-Assy.**	**1**	**515-6305-00**
includes :	*Pawl (Mounting Link) (Rt.) Plain*	*1*	*535-7271-00*
includes :	*Switch Actuator*	*1*	*545-5612-00*
includes :	*Rivet, 1/8" ø X 1/4" Lg.*	*1*	*249-5003-00*
9C	**Return Bracket**	**1**	**535-7353-00**
9D	"Flipper" Link Bushing (Metal, Ext.) (.385" Lg. X .192" ID X .312" OD)	1	530-5139-01
9E	#10-32 X 1-1/4" Lg. Socket Head	1	237-5950-01
9F	#10-32 X 7/8" Lg. Socket Head	1	237-5966-00
9G	#10-32 Nylon Stop Nut	2	240-5203-00
9H	#10 Split Lock Washer	2	244-5003-00
9I	Washer .203" ID X .63" OD X .105" Thk w/cut	1	242-5039-01
9J	Washer .203" ID X .63" OD X .062" Thk	2	242-5038-00
9K	**Key Plate**	**1**	**535-8769-00**

Diverter Assembly (500-6441-04-65) is secured below the playfield by:
#10 X 1/2" HWH MS (Serr) Zinc ST (Qty. 8) (237-5949-00)

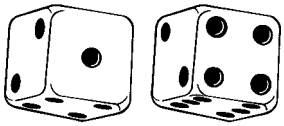

Wire Ramp Individual Parts Only (Items 1-9)

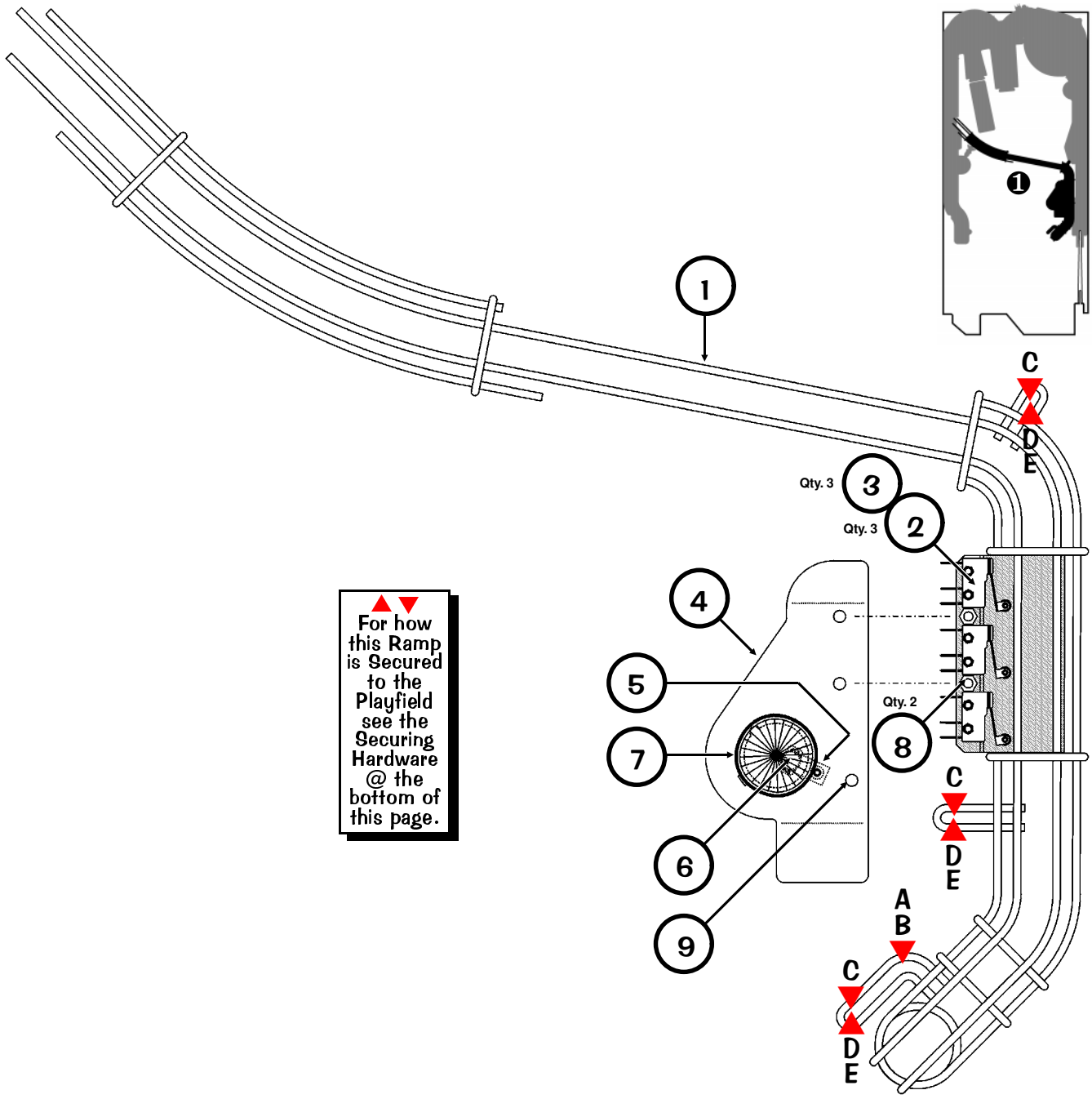

Nº	INDIVIDUAL PART NAME	QTY.	SPI PART Nº
1	Wire Ramp (No Parts)	1	535-8740-00
2	Micro Switch (Roller Actuator, Lite-Force)	3	180-5119-02
3	Switch Body Protect Plate	3	535-6539-00
Items 2 & 3 are secured by: #2-56 X 1/2" HWH Ser (Qty. 2/per) (237-5973-02) **and** #2-56 Hex Nut (Qty. 2/per) (240-5301-00)			
4	Plastic, Wire Ramp Switch Cover	1	830-5981-00
Item 4 is secured to Items 8 & 9 by: #6-32 X 3/8" PPH MS (Sems) Zinc (Qty. 3) (232-5201-00)			
5	#555 Wedge Base Socket (Offset)	1	077-5029-00
Item 5 is secured to Item 4 by: Rivet, 1/8" ø X 3/16" Lg. (Qty. 1) (249-5001-00)			

Nº	INDIVIDUAL PART NAME	QTY.	SPI PART Nº
6	#906 Wedge Base Bulb (Clear)	1	165-5004-00
7	Mini-Mars Light Cover (Snap-In) Red		550-5030-02
8	1-1/8" X 1/4" Hex Spacer #6-32 Tap	2	254-5008-17
9	2" X 1/4" Hex Spacer #6-32 Tap	1	254-5008-07

Item 9 and below A▼ & B▼ are for Ball Trap Prevention:
A▼ #10-32 X 3/8" SHWH (Ser) Swage (Qty. 1) (237-5985-00)
B▼ #10-32 Nylon Stop Nut (Qty. 1) (240-5203-00)

Wire Ramp is secured to the playfield by:
C▼▲ #6-32 X 1/2" PPH MS (Sems) Zinc (Qty. 3) (232-5202-00) **and**
D▲ Washer, 13/64" ID X 5/8" OD X .062" (Qty. 6) (242-5038-00)
E▲ 1/2" X 1/4" Hex Spacer #6-32 Tap (Qty. 3) (254-5008-03)

Slot Machine Unit Individual Parts Only (Items 1-21)

Drawing & Parts Table continues on the next page.

Lt. Side View

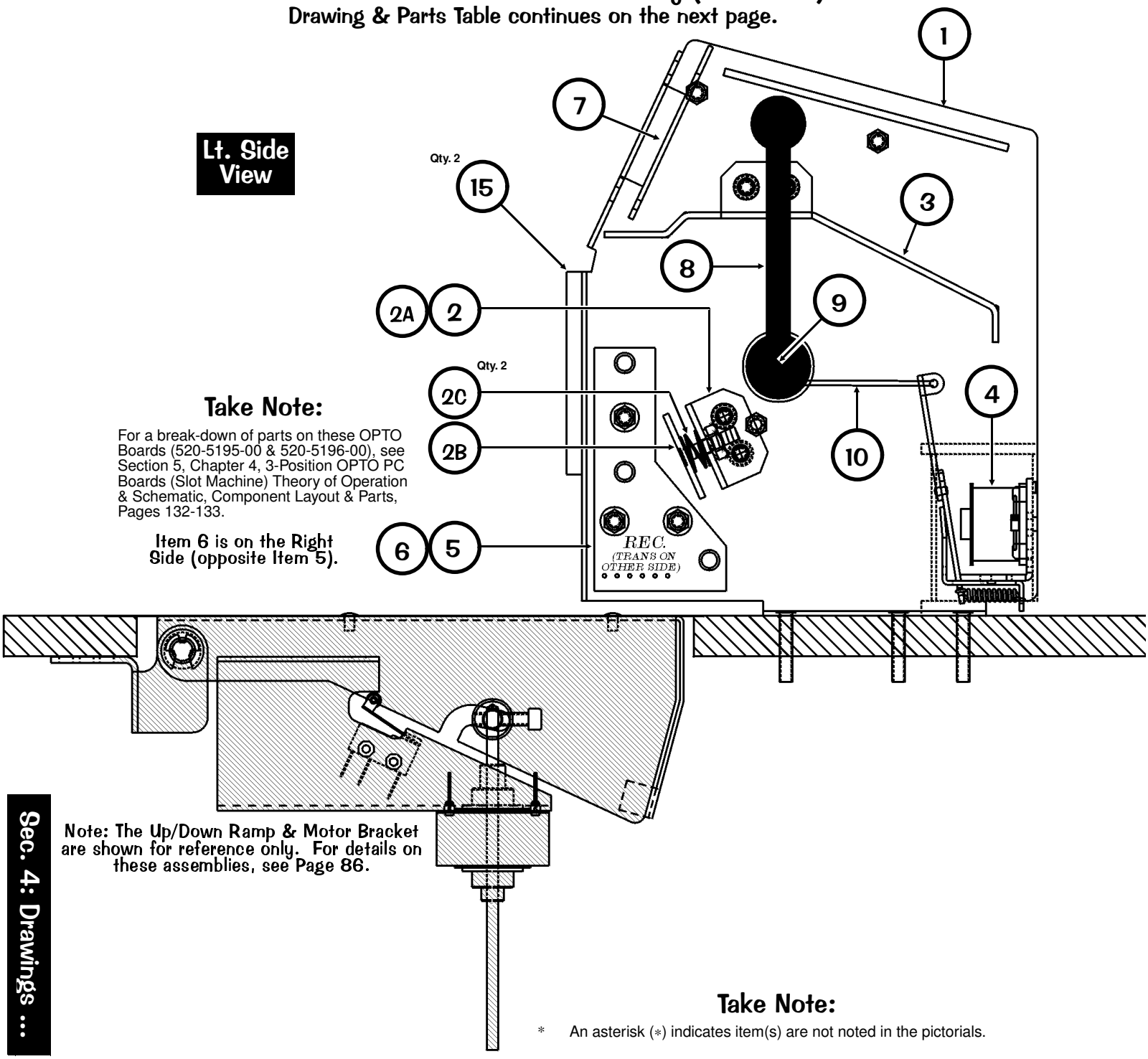

Take Note:

For a break-down of parts on these OPTO Boards (520-5195-00 & 520-5196-00), see Section 5, Chapter 4, 3-Position OPTO PC Boards (Slot Machine) Theory of Operation & Schematic, Component Layout & Parts, Pages 132-133.

Item 6 is on the Right Side (opposite Item 5).

Note: The Up/Down Ramp & Motor Bracket are shown for reference only. For details on these assemblies, see Page 86.

Take Note:

* An asterisk (*) indicates item(s) are not noted in the pictorials.

Nº	INDIVIDUAL PART NAME	QTY.	SPI PART Nº
1	Slot Machine Main Housing	1	515-7103-00
2	Spring Plate Assembly	1	515-7127-00-65
ORDERING ABOVE (ITEM 2) SUB-ASSY. PART Nº WILL INCLUDE:			
2A	Small Deflector Bracket	1	535-8704-00
2B	Deflector (Spring) Bash Plate	1	515-7128-00
2C	Compression Spring	2	266-5048-00
2D*	#8-32 Nylon Stop Nut	2	240-5120-00
3	Deflector Bracket	1	535-8762-00
4	Small Arm Coil 32-1800 Assembly	1	500-6435-00

Items 2, 3 & 4 are secured by: #8-32 X 3/8" HWH Swage (Sr) Zinc (Qty. 9) (237-5975-00)
For Individual Items use : Coil 32-1800 (Qty. 1) (**090-5031-00T**), Return Spring (Qty. 1) (Jaidninger #SPR29-18) (**266-5024-00**), Sm. Armature Assembly (Qty. 1) (**515-7101-00**).

Nº	INDIVIDUAL PART NAME	QTY.	SPI PART Nº
5	OPTO Rec. (3-Pos.) Assy. w/cable	1	515-7121-00-65
6	OPTO Trans. (3-Pos.) Assy. w/cable	1	515-7121-01-65

Items 5 & 6 are secured by: #6-32 X 5/8" Swage (Sr) Zinc (Qty. 3/per) (237-5976-04),
For Individual Items use : 3-Pos. OPTO Rec. (Qty. 1) (**520-5195-00**), 3-Pos. OPTO Trans. (Qty. 1) (**520-5196-00**), OPTO PCB Tube Spacer (Brass) (Qty. 3/per) (**530-5308-02**), OPTO PCB Rubber Grommet (Qty. 3/per) (**545-5518-00**) **and** #6-32 X 5/8" HWH Swage (Serr) Zinc (Qty. 3/per) (**237-5976-04**)
For more details on these OPTO PC Boards, see Sec. 5, Chp. 4, Pages 132-133.

7	Dot Display (5X7) x3 PC Board	1	520-5197-00

Item 7 is supported by: 1/4 Spacer RLCBSPR-4-01 (Qty. 4) (254-5026-00)
For more details on this PC Board, see Sec. 5, Chp. 4, Pages 134-135.

8	Small Lever Arm	1	545-5953-00

Slot Machine Unit Individual Parts Only (Items 1-21) Continued

Drawing & Parts Table continues on the previous page.

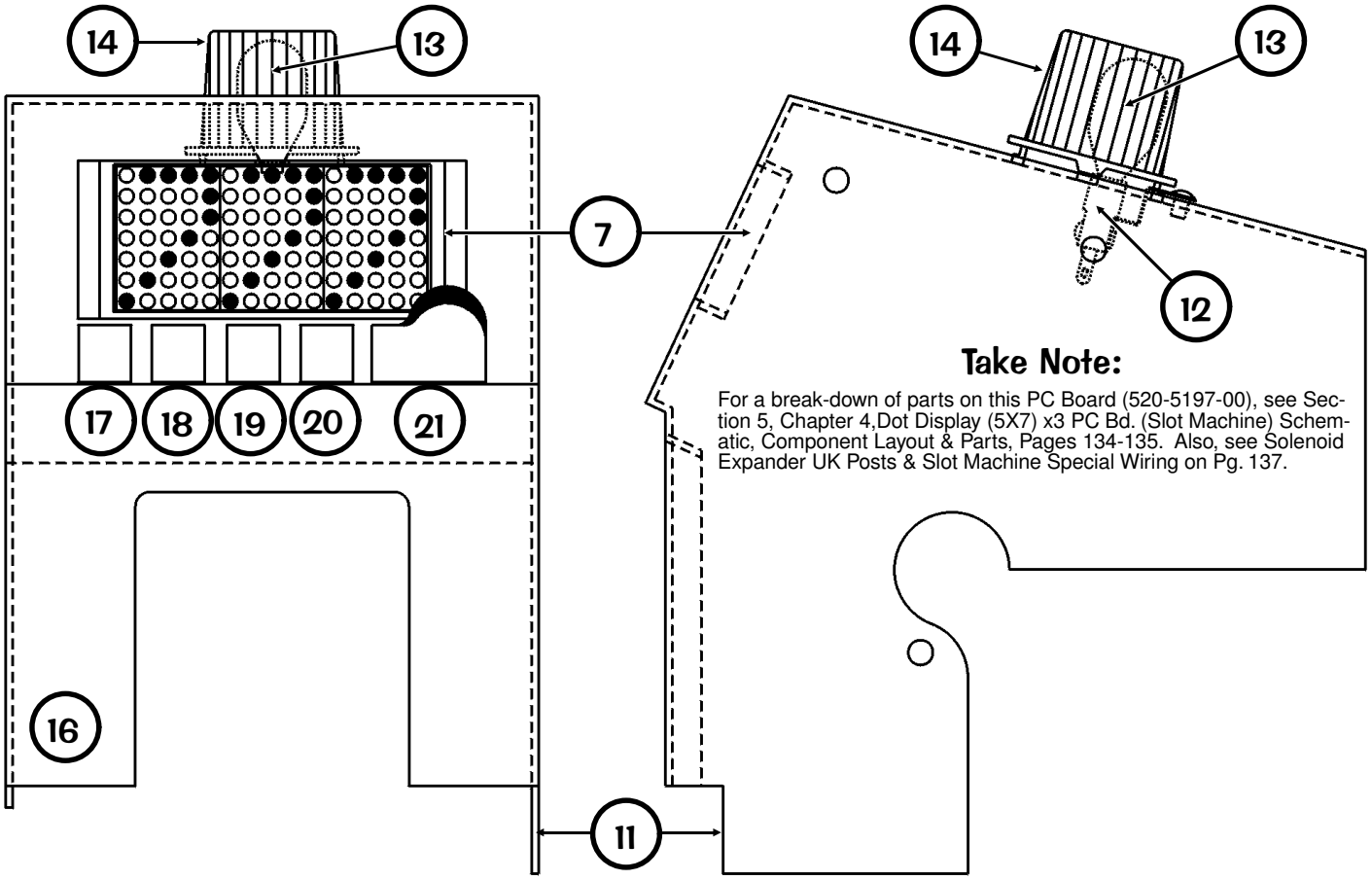

Take Note:

For a break-down of parts on this PC Board (520-5197-00), see Section 5, Chapter 4,Dot Display (5X7) x3 PC Bd. (Slot Machine) Schematic, Component Layout & Parts, Pages 134-135. Also, see Solenoid Expander UK Posts & Slot Machine Special Wiring on Pg. 137.

Front View

Lt. Side View

Nº	INDIVIDUAL PART NAME	QTY.	SPI PART Nº
9	Post Rubber (Sleeve Short)	2	545-5151-00
10	Small Arm Actuator	1	535-8703-00
11	Slot Machine Molded Plastic Cover	1	880-5038-00
	Item 11 is secured to Item 1 by: #6-32 X 5/8" HWH Swage (Ser.) Zc. (Qty. 5) (237-5976-04) **and**#6 Washer (Qty. 5) (242-5001-00)		
12	#555 Wedge Base Socket (Offset)	1	077-5029-00
	Item 12 is secured to Item 11 by: Rivet, 1/8" ø X 3/16" Lg. (Qty. 1) (249-5001-00) **and** #6 Riveting Lock Washer (Qty. 1) (246-5000-00)		
13	#906 Wedge Base Bulb (Clear)	1	165-5004-00
14	Mini-Mars Light Cover (Snap-In) Red	1	550-5030-02
15	Foam Rubber (Self-Adh.) 2.5" X 3/8" X 3/16"	2	626-5001-00

Nº	INDIVIDUAL PART NAME	QTY.	SPI PART Nº
16	Decal -32 **(from Decal Sheet Set)**	1	820-6260-XX
17	Decal -33 **(from Decal Sheet Set)**	1	
18	Decal -34 **(from Decal Sheet Set)**	1	
19	Decal -35 **(from Decal Sheet Set)**	1	
20	Decal -36 **(from Decal Sheet Set)**	1	
21	Decal -37 **(from Decal Sheet Set)**	1	

Decals & Plastic Pieces are a part of a Complete Set (Part Number ending in -XX). Individuals pieces are typically not available and the whole set must be ordered. See Sec. 4, Chp. 1, Parts Identification & Location, Page 57 for more details.

Slot Machine Unit is secured above the playfield by:
#8-32 Nylon Stop Nut (Qty. 4) (240-5102-00) **and**
#8 Washer .17" ID X 1/2" OD X .042" (Qty. 4) (242-5015-00)

Up/Down Ramp Individual Parts Only (Items 1-4)

(Assembled parts works in conjunction with assembled parts below)

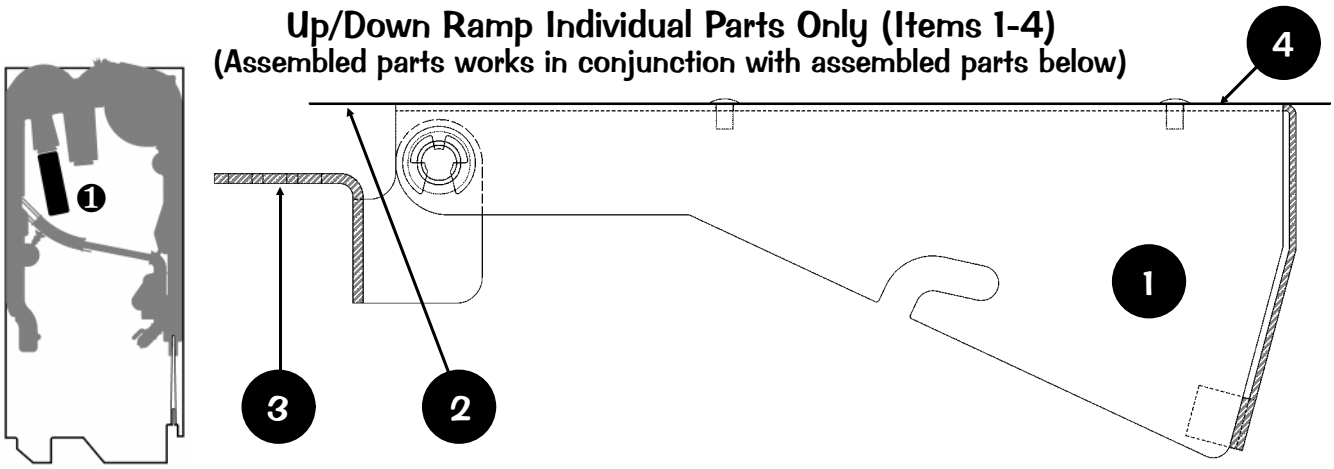

Nº	INDIVIDUAL PART NAME	QTY.	SPI PART Nº
1	Lift Ramp Welded Bracket (No Parts)	1	535-8709-00
2	Lift Ramp Flap (Cover)	1	535-8711-00
Item 2 is secured to Item 1 by: Rivet, 1/8" X 5/32" X 7/32" Semi-Tblr. (Qty. 4) (249-5022-00)			
3	Lift Ramp Fulcrum Bracket	1	535-8710-00

Item 3 is secured to Item 1 by: Nyliner 1/4" ID (Thomson #4L1-FF) (Qty. 2) (545-5423-00), Support Pin 2.08" (Qty. 1) (530-5449-03) **and** Ret. Ring, 1/4" ø Shaft (Qty. 2) (270-5002-00)

Nº	INDIVIDUAL PART NAME	QTY.	SPI PART Nº
4	Decal -31 **(from Decal Sheet Set)**	1	820-6260-XX

Decals Pieces are a part of a Complete Set (Part Number ending in -XX). Individuals pieces are typically not available and the whole set must be ordered. See Sec. 4, Chp. 1, Parts Identification & Location, Page 57 for more details.

Up/Down Ramp is secured under the playfield by:
#8-32 X 1/2" SHWH AB (Zinc) (Qty. 4) (234-5101-00)

Up/Down (Lift Ramp) Motor Bracket Individual Parts Only (Items 1-6)

(This assembly works in conjunction with the assembly above.)

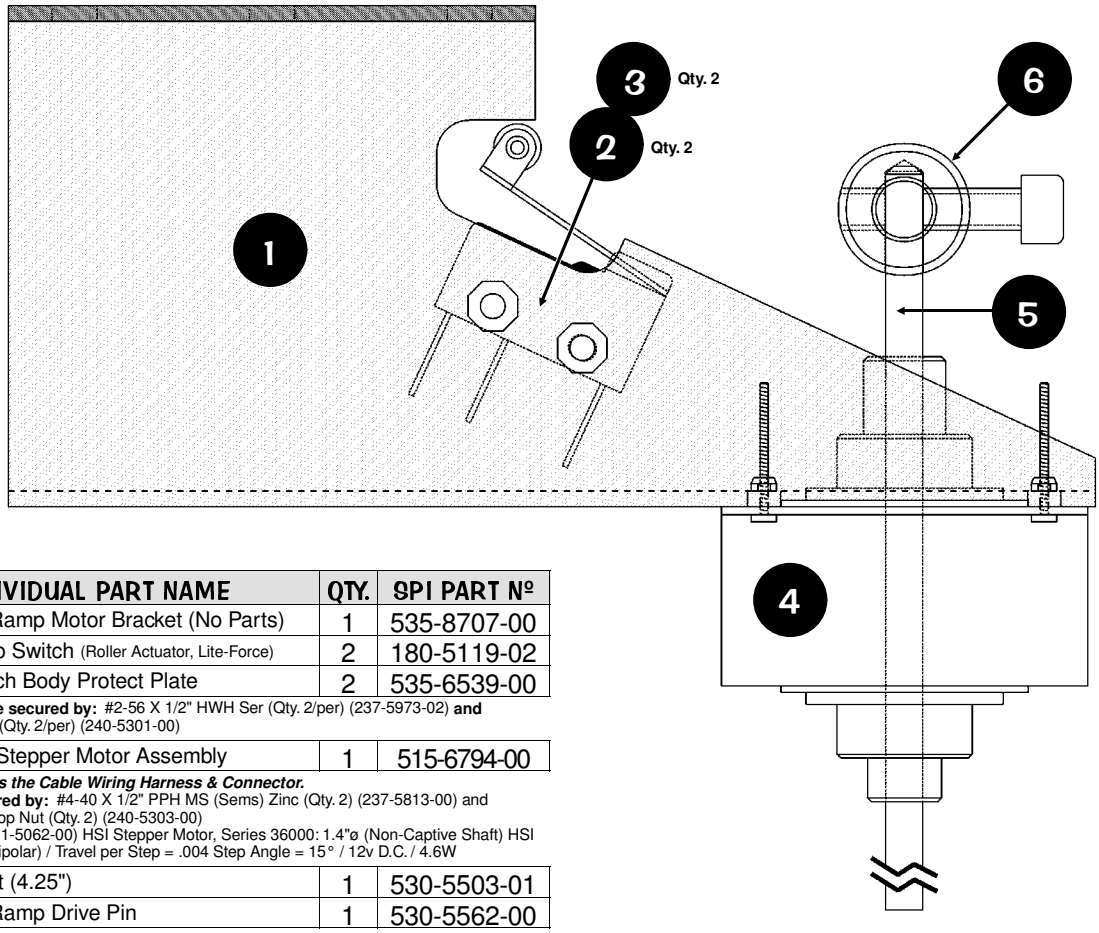

Nº	INDIVIDUAL PART NAME	QTY.	SPI PART Nº
1	Lift Ramp Motor Bracket (No Parts)	1	535-8707-00
2	Micro Switch (Roller Actuator, Lite-Force)	2	180-5119-02
3	Switch Body Protect Plate	2	535-6539-00

Items 2 & 3 are secured by: #2-56 X 1/2" HWH Ser (Qty. 2/per) (237-5973-02) **and** #2-56 Hex Nut (Qty. 2/per) (240-5301-00)

4	HSI Stepper Motor Assembly	1	515-6794-00

Item 4 includes the Cable Wiring Harness & Connector.
Item 4 is secured by: #4-40 X 1/2" PPH MS (Sems) Zinc (Qty. 2) (237-5813-00) and #4-40 Nylon Stop Nut (Qty. 2) (240-5303-00)
Motor Spec (041-5062-00) HSI Stepper Motor, Series 36000: 1.4"ø (Non-Captive Shaft) HSI #36864-12 (Unipolar) / Travel per Step = .004 Step Angle = 15° / 12v D.C. / 4.6W

5	Shaft (4.25")	1	530-5503-01
6	Lift Ramp Drive Pin	1	530-5562-00

Item 5 is secured by: #8-32 X 3/8" Socket Head Cap Screw (Zinc) (Qty. 1) (237-5897-00)

Up/Down Motor Bracket is secured under the playfield by:
#8-32 X 1/2" SHWH AB (Zinc) (Qty. 6) (234-5101-00)

Playfield Mini-Magnet (24-780) Individual Parts Only (Items 1-4)

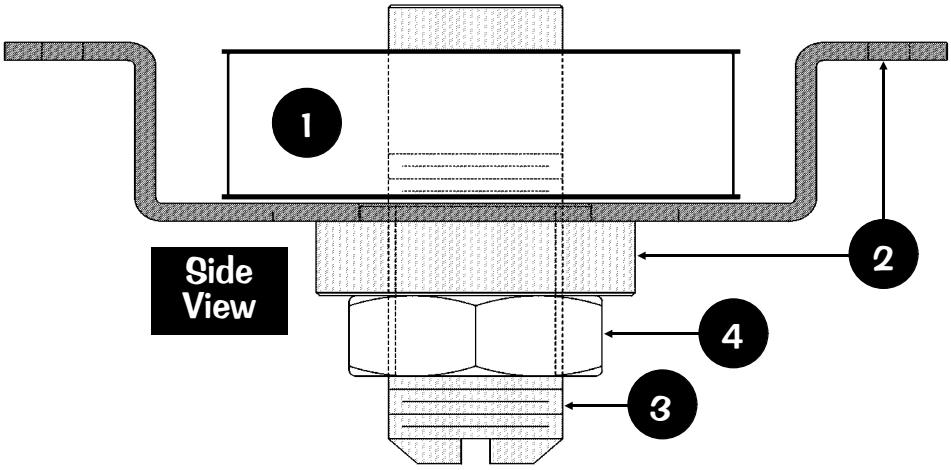

Nº	INDIVIDUAL PART NAME	QTY.	SPI PART Nº	Nº	INDIVIDUAL PART NAME	QTY.	SPI PART Nº
1	Magnet, 24-780	1	090-5061-00	3	Threaded Core Plug	1	530-5320-00
2	Threaded Core Weld Assembly	1	515-6141-01	4	3/4" - 16 Hex Nut	1	240-5315-00

Item 2 is secured to the Playfield by: #8 X 1/2" SHWH AB (Zinc) (Qty. 4) (234-5101-00)

OPTO (Bracket & PEM) Individual Parts Only (Items 1-3)

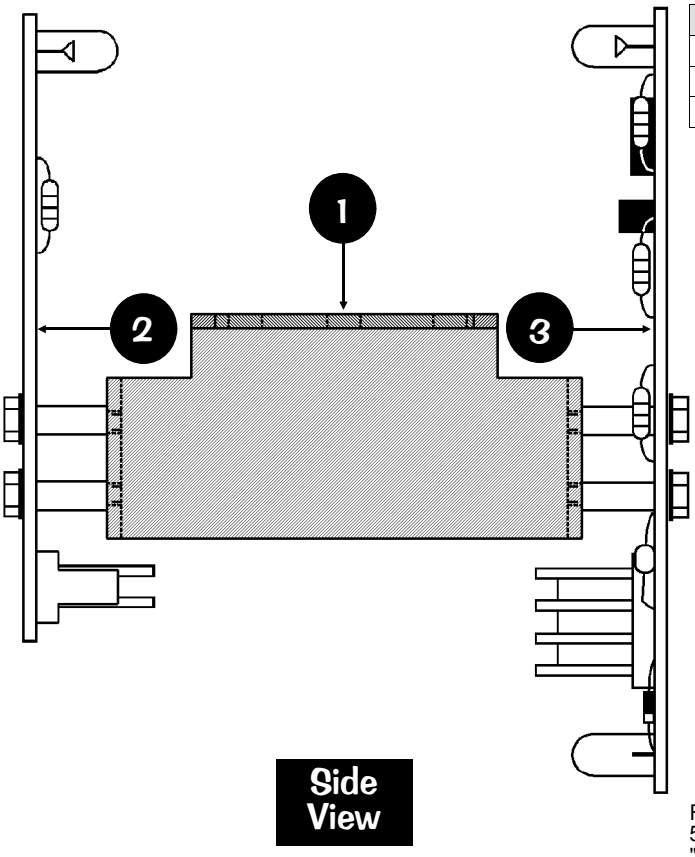

Nº	Individual Part Name	QTY.	SPI Part Nº
1	OPTO Mtng Bracket & PEM Assy.	1	515-7026-00
2	OPTO Transmitter (TRANS) Board	1	520-5082-00
3	OPTO Receiver (REC) Board	1	520-5083-01

Items 2 & 3 are secured by: #4-40 X 5/8" HWH (Serr) Zinc (Qty. 2/per) (237-5945-00)

OPTO Bracket is secured under the playfield by:
#8 X 1/2" SHWH AB (Zinc) (Qty. 2) (234-5101-00)

Take Note:

For a break-down of parts on the OPTO Boards (520-5082-00 & 520-5083-01), see Section 5, Chapter 4, Playfield Sw. OPTO "Long-Hop" Boards Component Layout & Parts, Page 138.

UK ONLY OPTIONAL

Ball Deflector (over Lt. & Rt. Outlanes) Assy., 500-5788-02 (Qty. 2) (Items 1-8)

Nº	INDIVIDUAL PART NAME	QTY.	SPI PART Nº
1	Ball Deflector Coil Mounting Bracket	1	535-6857-02
2	Coil Retaining Bracket	1	535-5203-03
Item 2 is secured by: #8-32 X 1/4" PPH MS (Sems) Zinc (Qty. 2) (232-5300-00)			
3	Coil, 26-1200	1	090-5044-00T
ORDERING ABOVE (ITEM 3) COIL PART Nº WILL INCLUDE:			
—	Diode, 1N4004 (positioned at top)	1	112-5003-00
4	Coil Sleeve (Short) (Formost #10-7077)	1	545-5076-01
5	Spring Washer (17/32" ID X 3/4" X 1")	1	269-5002-00
6	Solid Plunger Assembly	1	515-6858-00
7	Compression (Relay) Spring	1	266-5022-01
8	#10-32 Adj. Spindle Stop w/Rubber Tip	1	280-5014-00

Item 8 is secured by: #10-32 Keps Nut (Qty. 1) (240-5208-00)

Ball Deflector Assembly (500-5788-02) is secured under the playfield by:
#8-32 X 1/2" SHWH AB (Zinc) (Qty. 4) (234-5101-00)

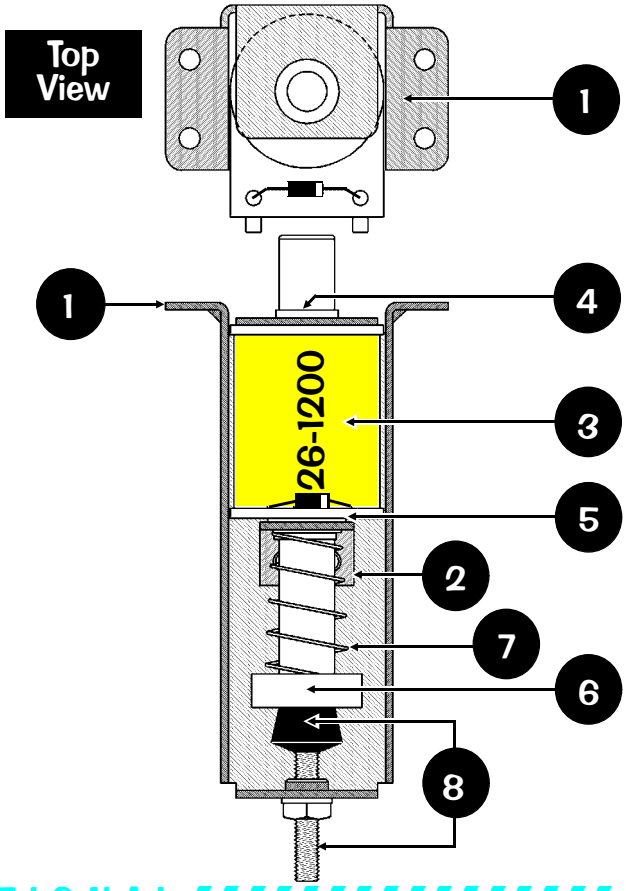

UK ONLY OPTIONAL

Up/Down Post Assembly, 500-6293-00 (Items 1-9)

Nº	INDIVIDUAL PART NAME	QTY.	SPI PART Nº
1	Up/Down Post Coil Mounting Bracket	1	515-6840-00
2	Adjustment Spindle Stop Bracket	1	535-8303-00
3	Coil Retaining Bracket	2	535-7356-00
Items 2 & 3 are secured by: #8-32 X 3/8" Swage (Serr) Zinc (Qty. 2/per) (237-5975-00)			
4	Coil, 23-1100 (ORG)	1	090-5030-00T
ORDERING ABOVE (ITEM 4) COIL PART Nº WILL INCLUDE:			
—	Diode, 1N4004 (positioned at top)	1	112-5003-00
5	Coil Sleeve (with extension)	1	545-5847-00
6	Spring Washer, 17/32" ID X 3/4" X 1"	1	269-5002-00
7	Plunger & Shaft Assembly	1	515-6844-00
ORDERING ABOVE (ITEM 7) SUB-ASSY. PART Nº WILL INCLUDE:			
7A	Ball Bumper Plastic (Top) Red	1	550-5029-02
7B*	Roll Pin, 3/32" ø X 1/2" Long	1	251-5002-00
7C*	Retaining Ring, 1/4" ø Shaft	1	270-5002-00
7D	Plunger & Shaft Sub-Assembly	1	515-6841-00
7E	Plunger Head	1	530-5511-00
7F	#10-32 X 3/8" PPH MS (Sems) Zinc	1	232-5401-00
8	Compression (Relay) Spring	1	266-5022-01
9	#10-32 Adj. Spindle Stop w/Rubber Tip	1	280-5014-00

Item 9 is secured by: #10-32 Keps Nut (Qty. 1) (240-5208-00)

Up/Down Post Assembly (500-6293-00) is secured under the playfield by:
#8-32 X 1/2" SHWH AB (Zinc) (Qty. 6) (234-5101-00)

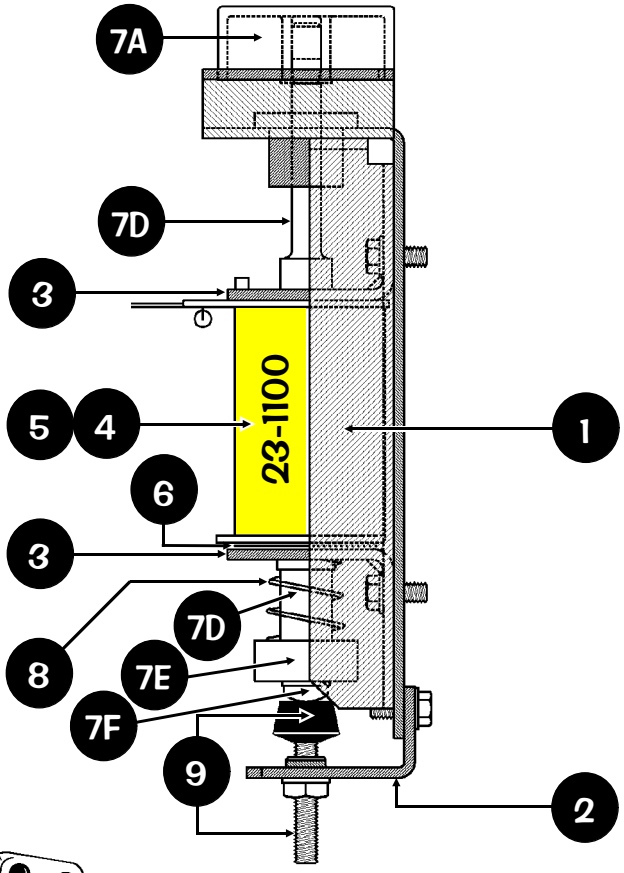

Take Note:

* An asterisk (*) indicates item(s) are not noted in the pictorials.

1. Item **7D**, part of Item **7**, Plunger & Shaft Sub-Assembly, is 1 piece and cannot be ordered separated.

Table of Contents

☐ COILS DETAILED CHART TABLE 90

• Chapter 1, Backbox Wiring 91
■ Backbox I/O Power Driver Board Detailed Wiring Diagram 91
■ Backbox Board Layout Wiring Diagram 92

• Chapter 2, Playfield Wiring 93
■ General Illumination Circuit Detailed Wiring Diagram 93
☐ Playfield Switch Wiring Diagram & Playfield Lamp Wiring Diagram 94
■ Playfield Terminal Strips, Fuses & Misc. Wiring Descriptions & Locations 95
☐ 2-Flipper Circuit Wiring Diagram 96

• Chapter 3, Cabinet Wiring 97
■ Transformer Power Wiring Diagram 97
☐ Cabinet / Coin Door Wiring Diagram 98

• Chapter 4, Printed Circuit Boards (PCBs) 99
■ Trough Up-Kicker Dual OPTO Boards
Theory of Operation & Schematic, Component Layout & Parts 99
☐ OPTO Troubleshooting ..... (Top) 100
☐ Trough Dual OPTO Boards Alignment / Tests for LED1 & LED2 100-101
■ Dot Matrix Display/Display Controller Bd. Combined Display Connections 102
☐ Display Power Supply Board Schematic, Component Layout & Parts 103
■ Display Controller Board Schematic 104-105
■ Display Controller Board Component Layout & Parts 106
☐ I/O Power Driver Board Theory of Operation 107
☐ I/O Power Driver Board Schematic
(Sheet 1 of 5), (Sheet 2 of 5), (Sheet 3 of 5), (Sheet 4 of 5), (Sheet 5 of 5) 108-117
☐ I/O Power Driver Board Component Layout 118
☐ I/O Power Driver Board Parts 119
■ CPU/Sound Board Theory of Operation 121
■ CPU/Sound Board Schematic
(Sheet 1 of 3), (Sheet 2 of 3), (Sheet 3 of 3) 122-127
■ CPU/Sound Board Component Layout 128
■ CPU/Sound Board Parts 129
☐ 4-Position OPTO PC Board (Roulette Motor)
Theory of Operation & Schematic, Component Layout & Parts 130-131
■ 3-Position OPTO PC Boards (Slot Machine)
Theory of Operation & Schematic, Component Layout & Parts 132-133
☐ Dot Display (5X7) x3 PC Board (Slot Machine)
Schematic, Component Layout & Parts 134-135
■ Solenoid Expander PC Board
Schematic, Component Layout, Parts, UK Posts & Slot Mach. Special Wiring . 136-137
☐ Playfield Sw. OPTO "Long-Hop" Boards
Theory of Operation & Schematic, Component Layout & Parts 138

Visit **www.SternPinball.com/schematics.htm** for the latest 11" X 17" Schematics (or "Split 8-1/2" X 11") for the **Display Power Supply, Display Controller, I/O Power Driver & CPU/Sound Boards** (White Star™ System Only). Along with the schematics you'll find the component layout and theory of operation. Keep visiting as these files are continuously improved with more "search" links in the documents. The files are in PDF Format (Adobe® Reader required). They may be slow to open in the website only, but once on your harddrive they'll open fast. Inside the schematics you can utilize internal links where addresses may direct you to another sheet in the schematic set (further instructions within documents). To "download" once open, in your browser click "File" "Send" "Page by eMail". It will be sent to your eMail Address, where there you can save the file to your hardrive.

Use the below ***Coils Detailed Chart Table*** in conjunction with Sec. 5, Chp. 1, Backbox I/O Power Driver Board Detailed Wiring Diagram (I/O Board Connectors J6, J7, J8 & J9) and Backbox Board Layout Wiring Diagram:

COILS DETAILED CHART TABLE

High Current Coils Group 1		Drive Transistor (D.T.)	Driver Ouput Board	D.T. Control Line Color	D.T. Control Line Connect	Power Line Color	Power Line Connnection	Power Voltage	Coil GA-Turn or Bulb Type
#1	TROUGH UP-KICKER	Q1	I/O Pwr. Drvr.	BRN-BLK	J8-P1	YEL-VIO	J10-P4/5	50v DC	26-1200 090-5044-00T
#2	AUTO LAUNCH	Q2	I/O Pwr. Drvr.	BRN-RED	J8-P3	YEL-VIO	J10-P4/5	50v DC	22-600 090-5023-00B
#3	DROP TARGET RESET	Q3	I/O Pwr. Drvr.	BRN-ORG	J8-P4	YEL-VIO	J10-P4/5	50v DC	23-1100 090-5030-00T
#4	NOT USED	Q4	I/O Pwr. Drvr.	BRN-YEL	J8-P5				
#5	SLOT HANDLE	Q5	I/O Pwr. Drvr.	BRN-GRN	J8-P6	YEL-VIO	J10-P4/5	50v DC	32-1800 090-5031-00T
#6	NOT USED	Q6	I/O Pwr. Drvr.	BRN-BLU	J8-P7				
#7	ROULETTE WHEEL MOTOR	Q7	I/O Pwr. Drvr.	BRN-VIO	J8-P8	BRN	J7-P1	20v DC	Motor 041-5078-00
#8	FLASH: ROULETTE	Q8	I/O Pwr. Drvr.	BRN-GRY	J8-P9	YEL-VIO	J10-P4/5	50v DC	#906 Bulb 165-5004-00

High Current Coils Group 2		Drive Transistor (D.T.)	Driver Ouput Board	D.T. Control Line Color	D.T. Control Line Connect	Power Line Color	Power Line Connnection	Power Voltage	Coil GA-Turn
#9	LEFT BUMPER	Q9	I/O Pwr. Drvr.	BLU-BRN	J9-P1	YEL-VIO	J10-P4/5	50v DC	26-1200 090-5044-00T
#10	RIGHT BUMPER	Q10	I/O Pwr. Drvr.	BLU-RED	J9-P2	YEL-VIO	J10-P4/5	50v DC	26-1200 090-5044-00T
#11	BOTTOM BUMPER	Q11	I/O Pwr. Drvr.	BLU-ORG	J9-P4	YEL-VIO	J10-P4/5	50v DC	26-1200 090-5044-00T
#12	NOT USED	Q12	I/O Pwr. Drvr.	BLU-YEL	J9-P5				
#13	ORBIT MAGNET DOTS	Q13	I/O Pwr. Drvr.	BLU-GRN	J9-P6	VIO-YEL BLK	J10-P3	50v DC	24-780 090-5061-00
#14	CENTER RAMP DIVERTER	Q14	I/O Pwr. Drvr.	BLU-BLK	J9-P7	RED-YEL GRY-YEL	J10-P1/2	50v DC	23-1100 090-5030-00T
#15	LEFT FLIPPER (50v RED/YEL)	Q15	I/O Pwr. Drvr.	ORG-GRY	J9-P8	RED-YEL GRY-YEL	J10-P1/2	50v DC	22-900 090-5020-20T
#16	RIGHT FLIPPER (50v RED/YEL)	Q16	I/O Pwr. Drvr.	ORG-VIO	J9-P9	RED-YEL BLU-YEL	J10-P1/2	50v DC	22-1080 090-5032-00T

Low Current Coils Group 1		Drive Transistor (D.T.)	Driver Ouput Board	D.T. Control Line Color	D.T. Control Line Connect	Power Line Color	Power Line Connnection	Power Voltage	Coil GA-Turn or Meter #
#17	LEFT SLINGSHOT [BOTTOM]	Q17	I/O Pwr. Drvr.	VIO-BRN	J7-P2	BRN	J7-P1	20v DC	23-800 090-5001-00T
#18	RIGHT SLINGSHOT [BOTTOM]	Q18	I/O Pwr. Drvr.	VIO-RED	J7-P3	BRN	J7-P1	20v DC	23-800 090-5001-00T
#19	TOP LEFT SLINGSHOT	Q19	I/O Pwr. Drvr.	VIO-ORG	J7-P4	BRN	J7-P1	20v DC	23-800 090-5001-00T
#20	TOP RIGHT SLINGSHOT	Q20	I/O Pwr. Drvr.	VIO-YEL	J7-P6	BRN	J7-P1	20v DC	23-800 090-5001-00T
#21	FLASH: LOCK BALL	Q21	I/O Pwr. Drvr.	VIO-GRN	J7-P7	ORG	J6-P10	20v DC	#906 Bulb 165-5004-00
#22	POPS ENTRY POST	Q22	I/O Pwr. Drvr.	VIO-BLU	J7-P8	BRN	J7-P1	20v DC	27-1500 090-5004-00T
#23	BALL LOCK POST	Q23	I/O Pwr. Drvr.	VIO-BLK	J7-P9	BRN	J7-P1	20v DC	27-1500 090-5004-00T
#24	OPTIONAL COIN METER	Q24	I/O Pwr. Drvr.	VIO-GRY	J7-P10	RED	J16-P7	5v DC	Meter 5v 091-5000-00

Diode **O**n **T**erminal **S**trip (if noted)

Low Current Coils Group 2		Drive Transistor (D.T.)	Driver Ouput Board	D.T. Control Line Color	D.T. Control Line Connect	Power Line Color	Power Line Connnection	Power Voltage	Bulb Type
#25	LEFT RAMP DIVERTER	Q25	I/O Pwr. Drvr.	BLK-BRN	J6-P1	BRN	J7-P1	20v DC	27-1500 090-5004-00T
#26	STEPPER MOTOR (RED) DOTS	Q26	I/O Pwr. Drvr.	BLK-RED to RED	J6-P2	GRY-RED WHT	J16-P3	20v DC	Step. Mtr. 041-5062-01
#27	STEPPER MOTOR (GREEN) DOTS	Q27	I/O Pwr. Drvr.	BLK-ORG to GRN	J6-P3	GRY-RED WHT	J16-P3	20v DC	Step. Mtr. 041-5062-01
#28	STEPPER MOTOR (BLACK) DOTS	Q28	I/O Pwr. Drvr.	BLK-YEL to BLK	J6-P4	GRY-RED WHT	J16-P3	20v DC	Step. Mtr. 041-5062-01
#29	STEPPER MOTOR (BLUE) DOTS	Q29	I/O Pwr. Drvr.	BLK-GRN to BLU	J6-P5	GRY-RED WHT	J16-P3	20v DC	Step. Mtr. 041-5062-01
#30	FLASH: DIVERTER	Q30	I/O Pwr. Drvr.	BLK-BLU	J6-P6	ORG	J6-P10	20v DC	#906 Bulb 165-5004-00
#31	FLASH: POPS*2	Q31	I/O Pwr. Drvr.	BLK-VIO	J6-P7	ORG	J6-P10	20v DC	#89 Bulb 165-5000-89
#32	FLASH: SLOT MACHINE	Q32	I/O Pwr. Drvr.	BLK-GRY	J6-P8	ORG	J6-P10	20v DC	#906 Bulb 165-5004-00

Note: In Test Flash Lamps Menu ("Flash" Icon), Flashers tested are all Flash Lamps located between Q1-Q32 (This Game: #8, #21 & #30-#32)

Auxilliary (UK ONLY)		Drive Transistor (D.T.)	Driver Ouput Board	D.T. Control Line Color	D.T. Control Line Connect	Power Line Color	Power Line Connnection	Power Voltage	Coil GA-Turn
AUX 1:	LEFT UP/DOWN POST	Q1	Sol. Expander (Aux. Board)	WHT	J3-P11	BRN	J7-P1	20v DC	26-1200 090-5044-00T
AUX 2:	CENTER UP/DOWN POST	Q2	Sol. Expander (Aux. Board)	RED	J3-P10	BRN	J7-P1	20v DC	23-1100 090-5030-00T
AUX 3:	RIGHT UP/DOWN POST	Q3	Sol. Expander (Aux. Board)	ORG	J3-P9	BRN	J7-P1	20v DC	26-1200 090-5044-00T

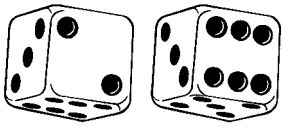

Backbox Wiring

Backbox I/O Power Driver Board Detailed Wiring Diagram

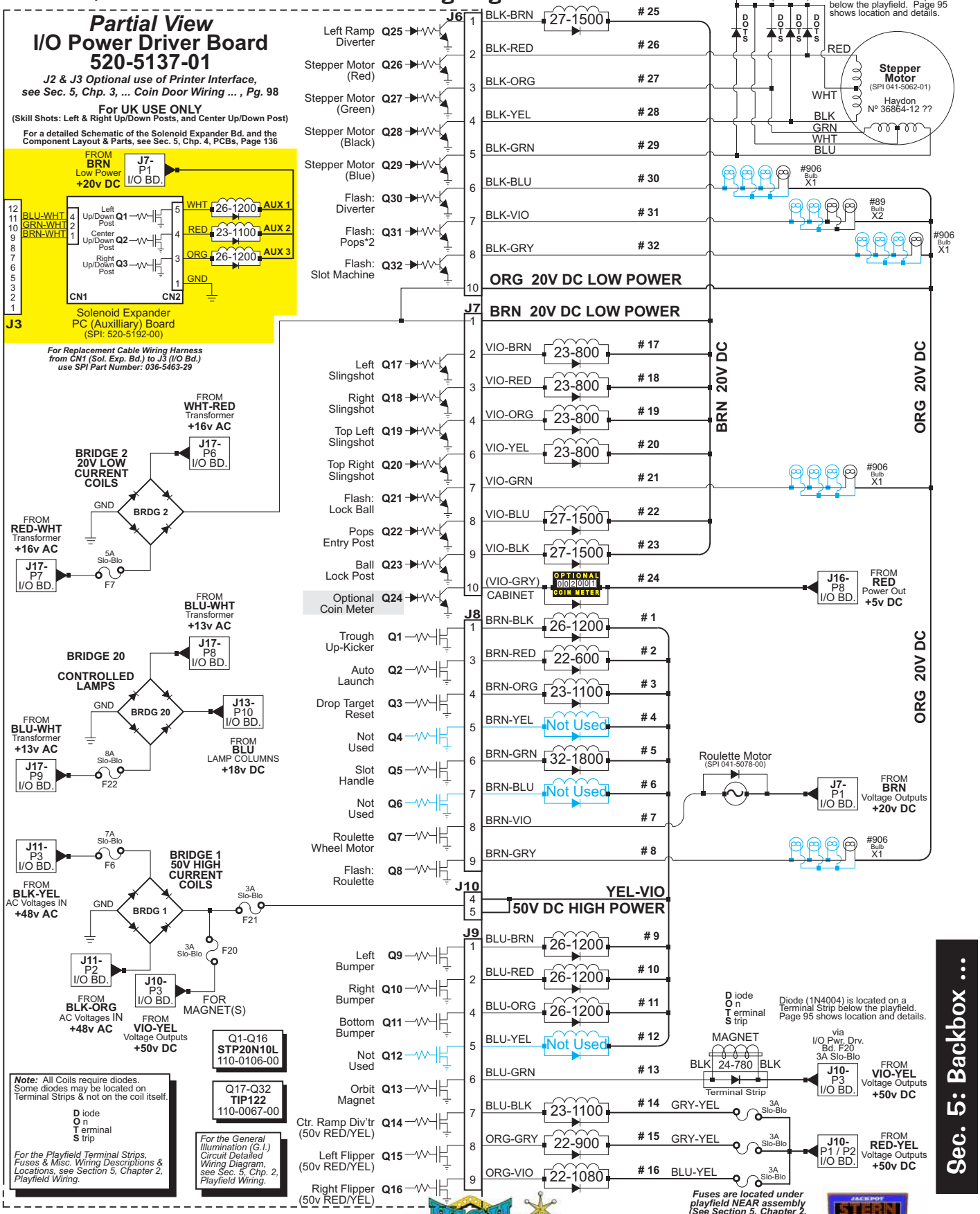

Backbox Board Layout Wiring Diagram

Important Note:
When connecting any Ribbon Cable, always ensure the "Red Line" side of the ribbon cable goes to the Pin-1 side of any Dual 0.1" Header Connector.

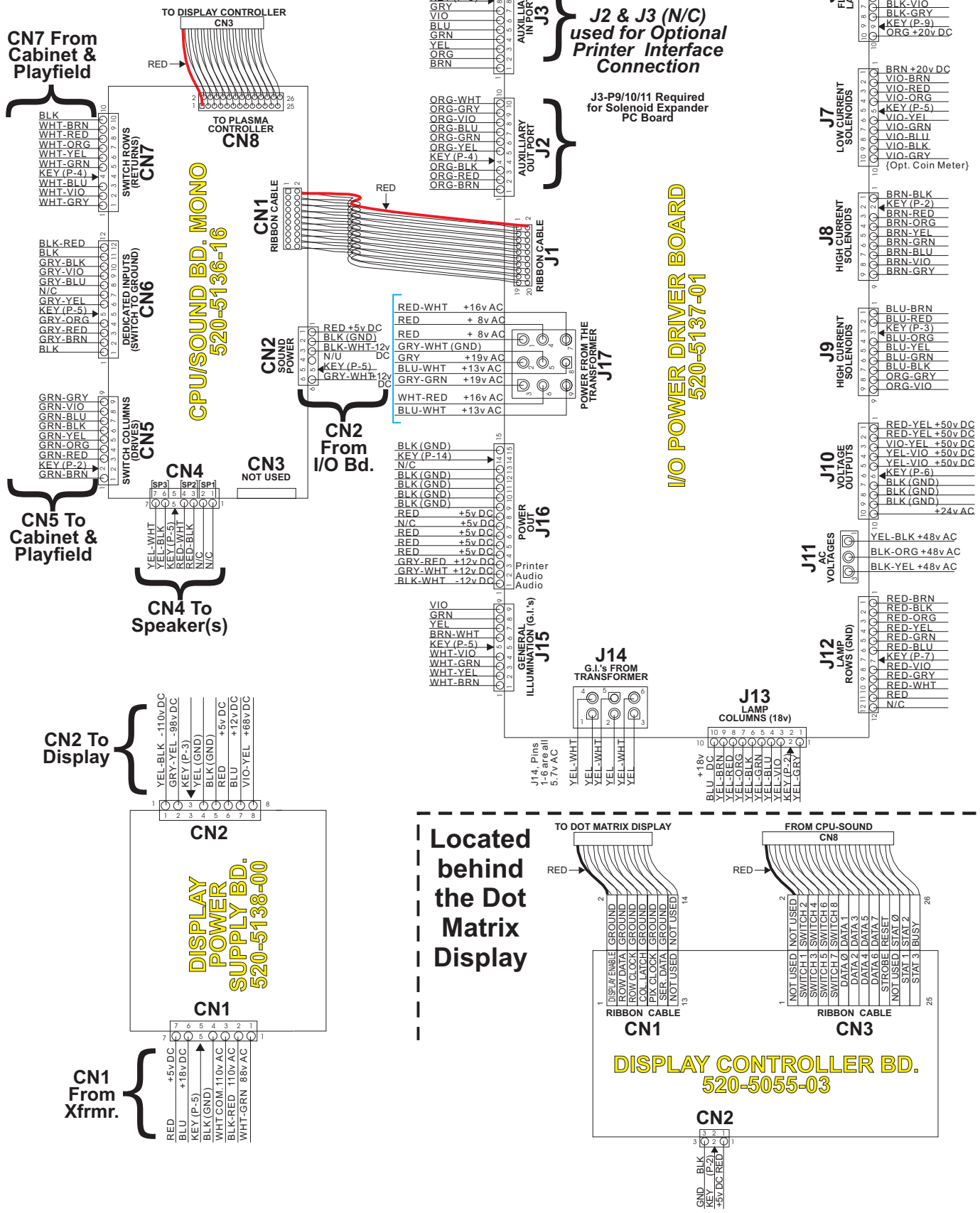

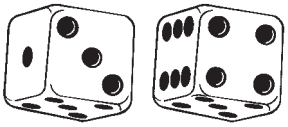

Playfield Wiring

General Illumination Circuit Detailed Wiring Diagram

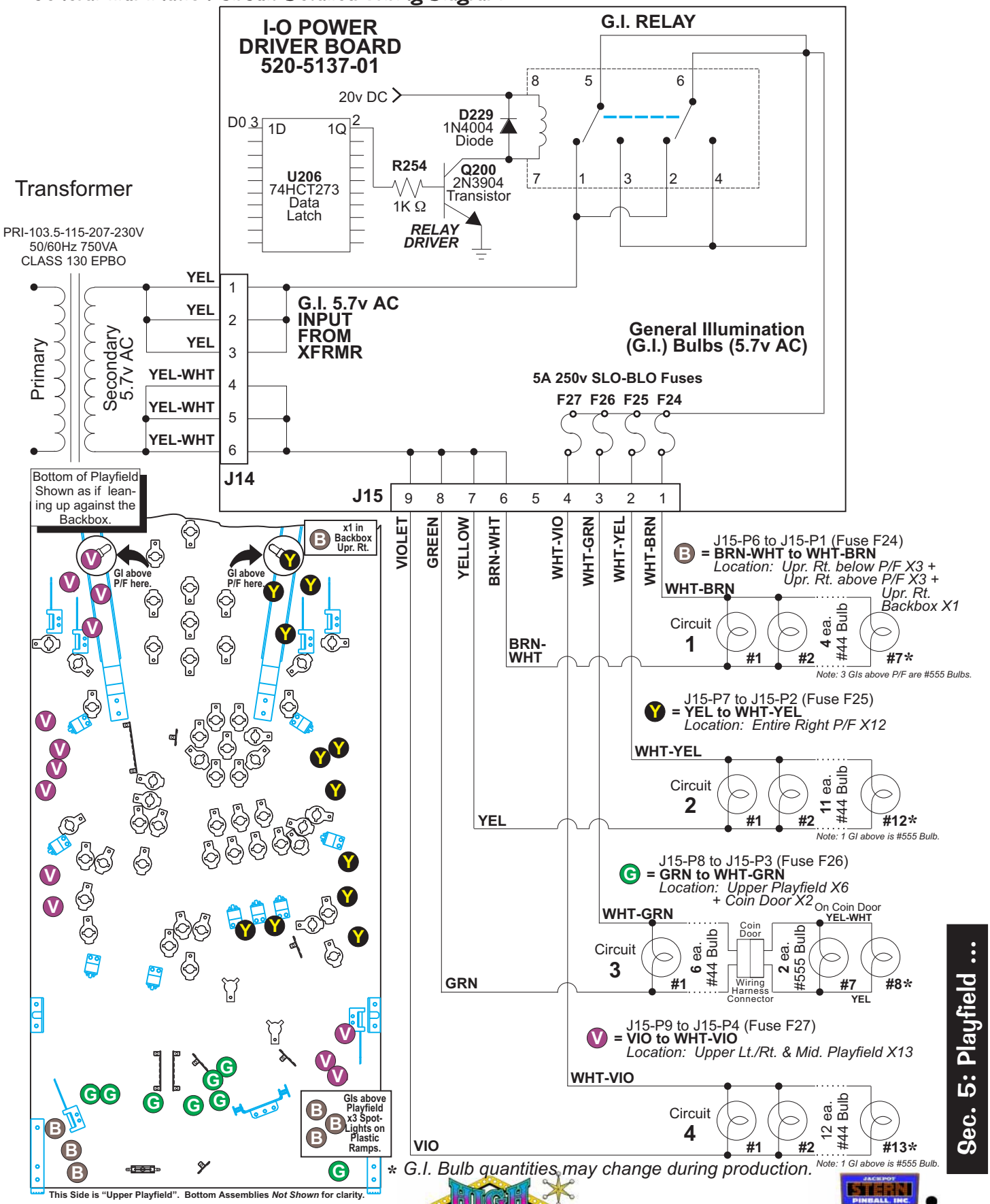

* G.I. Bulb quantities may change during production.

Playfield Switch Wiring Diagram

Note: All switches require diodes. Some diodes are located on Terminal Strips OR on a Diode Board (under playfield) & not on the switch itself.

Diode **O**n **T**erminal **S**trip -or- **D**iode **O**n **D**iode **B**oard

For Switches: 17, 18, 19 & 20

Switch 1 Lt. Button (UK ONLY)	Switch 9 Left Chip	Switch 17 2 / ♥ Drop	Switch 25 3-Ball Lock Low	Switch 33 Top Slot OPTO - ...	Switch 41 Roulette Wheel...1	Switch 49 Left Bumper	Switch 57 Left Outlane
Switch 2 4th Coin Slot	Switch 10 Roll Dice	Switch 18 2 / ♦ Drop	Switch 26 3-Ball Lock Mid	Switch 34 Mid Slot OPTO - ...	Switch 42 Roulette Wheel...2	Switch 50 Right Bumper	Switch 58 Left Re-turn Lane
Switch 3 6th Coin Slot ✻	Switch 11 4-Ball Trough #1	Switch 19 4 / ♦ Drop	Switch 27 3-Ball Lock High	Switch 35 Bot. Slot OPTO - ...	Switch 43 Roulette Wheel...3	Switch 51 Bottom Bumper	Switch 59 Left Slingshot
Switch 4 Rt. Coin Slot	Switch 12 4-Ball Trough #2	Switch 20 A / ♠ Drop	Switch 28 Left 21 Hit S/U	Switch 36 Mid. Ramp Lt. Entry	Switch 44 Roulette Wheel...4	Switch 52 2nd Up / Dn. Ramp	Switch 60 Right Outlane
Switch 5 Cnt. Coin Slot-DBA	Switch 13 4-Ball Trough #3	Switch 21 A / ♦ Standup	Switch 29 Right 21 Hit S/U	Switch 37 Mid. Ramp Rt. Entry	Switch 45 Left Orbit	Switch 53 Roulette Spin	Switch 61 Right Re-turn Lane
Switch 6 Lt. Coin Slot	Switch 14 4-Ball Tr. VUK Opto	Switch 22 Joker Standup	Switch 30 Upr. Rt. Standup	Switch 38 1st Up/ Dn. Ramp	Switch 46 Right Orbit	Switch 54 Start Button	Switch 62 Right Slingshot
Switch 7 5th Coin Slot ✻	Switch 15 ...Stack-ing Opto	Switch 23 3 / ♦ Standup	Switch 31 Right Chip	Switch 39 Left Orbit Gate	Switch 47 Top Lt. Slingshot	Switch 55 Slam Tilt	Switch 63 Not Used
Switch 8 Rt. Button (UK ONLY)	Switch 16 Shooter Lane	Switch 24 Spinner	Switch 32 Pop Entry OPTO	Switch 40 Left Ramp Exit	Switch 48 Top Rt. Slingshot	Switch 56 Plumb Bob Tilt	Switch 64 Not Used

✻ Future Expansion

Please Note: Switch & Lamp Descriptions may differ slightly than that of the Dot Display due to space restraints.

CPU-Snd. Bd. CN5-

Color	Pin	
GRN-BRN	1	Sw. Drive 1: **Q1**
GRN-RED	3	Sw. Drive 2: **Q2**
GRN-ORG	4	Sw. Drive 3: **Q3**
GRN-YEL	5	Sw. Drive 4: **Q4**
GRN-BLK	6	Sw. Drive 5: **Q5**
GRN-BLU	7	Sw. Drive 6: **Q6**
GRN-VIO	8	Sw. Drive 7: **Q7**
GRN-GRY	9	Sw. Drive 8: **Q8**

Column

Switch Drive Transistor

Source Nº: 2N3904

CPU-Snd. Bd. CN7-

Color	Pin	
	10	N/C
WHT-BRN	9	Sw. Return 1: **U400**
WHT-RED	8	Sw. Return 2: **U400**
WHT-ORG	7	Sw. Return 3: **U400**
WHT-YEL	6	Sw. Return 4: **U400**
WHT-GRN	5	Sw. Return 5: **U401**
WHT-BLU	3	Sw. Return 6: **U401**
WHT-VIO	2	Sw. Return 7: **U401**
WHT-GRY	1	Sw. Return 8: **U401**

Row

Switch Return IC

Source Nº: LM339AN

Playfield Lamp Wiring Diagram

Note: All lamps require diodes. Some diodes are located on Terminal Strips (under playfield) & not on the lamp itself.

Diode **O**n **T**erminal **S**trip

For Lamps: 13, 14 & 15

LMP 1 Won Slot Machine	LMP 2 Won Poker	LMP 3 Won HI-LO	LMP 4 Won Roulette	LMP 5 Won Craps	LMP 6 Won Blackjack 21	LMP 7 Casino Frenzy	LMP 8 Cheat Game
LMP 9 (H) ILO	LMP 10 H (I) LO	LMP 11 HI (L) O	LMP 12 HIL (O)	LMP 13 Left Bumper	LMP 14 Right Bumper	LMP 15 Bottom Bumper	LMP 16 Break the Bank
LMP 17 Chip 1	LMP 18 Chip 2	LMP 19 Chip 3	LMP 20 Chip 4	LMP 21 Chip 5	LMP 22 Chip 10	LMP 23 Chip 25	LMP 24 Chip 50
LMP 25 2 / Hearts	LMP 26 2 / Diamonds	LMP 27 4 / Diamonds	LMP 28 A / Spades	LMP 29 A / Diamonds	LMP 30 Joker	LMP 31 3 / Diamonds	LMP 32 Roll Again
LMP 33 Left Orbit Arrow	LMP 34 Play 21	LMP 35 Double Down	LMP 36 Slot Machine Arrow	LMP 37 Spin Slot	LMP 38 Lock Ball	LMP 39 Multiball	LMP 40 Super Jackpot
LMP 41 Ramp Arrow	LMP 42 Play Roulette	LMP 43 Play Roll-N-Win	LMP 44 Right Orbit Arrow	LMP 45 Play HI-LO	LMP 46 Play Poker	LMP 47 Back Panel Left #1	LMP 48 Back Panel #2
LMP 49 Left Chip	LMP 50 Roll Dice	LMP 51 Left 21 Hit	LMP 52 Right 21 Hit	LMP 53 Light Roll-N-Win	LMP 54 Right Chip	LMP 55 Back Panel #3	LMP 56 Back Panel #4
LMP 57 Special	LMP 58 Extra Ball	LMP 59 Back Panel #5	LMP 60 Back Panel #6	LMP 61 BG Super Pops	LMP 62 BG Super Loops	LMP 63 BG Super Surprise	LMP 64 BG Super Spinner
LMP 65 BG Start	LMP 66 BG 3 Slot Spins	LMP 67 BG ?	LMP 68 BG 10 Chips	LMP 69 BG Roll Again	LMP 70 BG Light Extra Ball	LMP 71 BG Multiball	LMP 72 BG Collect Bonus
LMP 73 BG Casino	LMP 74 BG 25 Million	LMP 75 BG Bonus X	LMP 76 BG Light Special	LMP 77 Back Panel #7	LMP 78 Back Panel #8	LMP 79 Back Panel #9	LMP 80 Back Panel Right #10

I-O Bd. J13-

Color	Pin	
	10	BLUE — Power Out for +18v for Disp. Pwr. Sup. Bd. CN1-Pin 6
YEL-BRN	9	Lamp Drive 1: **U17**
YEL-RED	8	Lamp Drive 2: **U16**
YEL-ORG	7	Lamp Drive 3: **U15**
YEL-BLK	6	Lamp Drive 4: **U14**
YEL-GRN	5	Lamp Drive 5: **U13**
YEL-BLU	4	Lamp Drive 6: **U12**
YEL-VIO	3	Lamp Drive 7: **U11**
YEL-GRY	1	Lamp Drive 8: **U10**

Column

Lamp Drive IC

Source Nº: VN02N

I-O Bd. J12-

Color	Pin	
RED-BRN	1	Lamp Return 1: **Q33**
RED-BLK	2	Lamp Return 2: **Q34**
RED-ORG	3	Lamp Return 3: **Q35**
RED-YEL	4	Lamp Return 4: **Q36**
RED-GRN	5	Lamp Return 5: **Q37**
RED-BLU	6	Lamp Return 6: **Q38**
RED-VIO	8	Lamp Return 7: **Q39**
RED-GRY	9	Lamp Return 8: **Q40**
RED-WHT	10	Lamp Return 9: **Q41**
RED	11	Lamp Return 10: **Q42**
	12	N/C — From I-O Pwr. Driver Board J16-Pins 9-15

Row

Lamp Return Transistor

Source Nº: STP19N06L

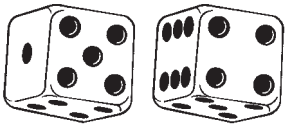

Playfield Terminal Strips, Fuses & Misc. Wiring Descriptions & Locations

All fuses are rated: ***3A 250v Slo-Blo***

Do Not Over-Fuse

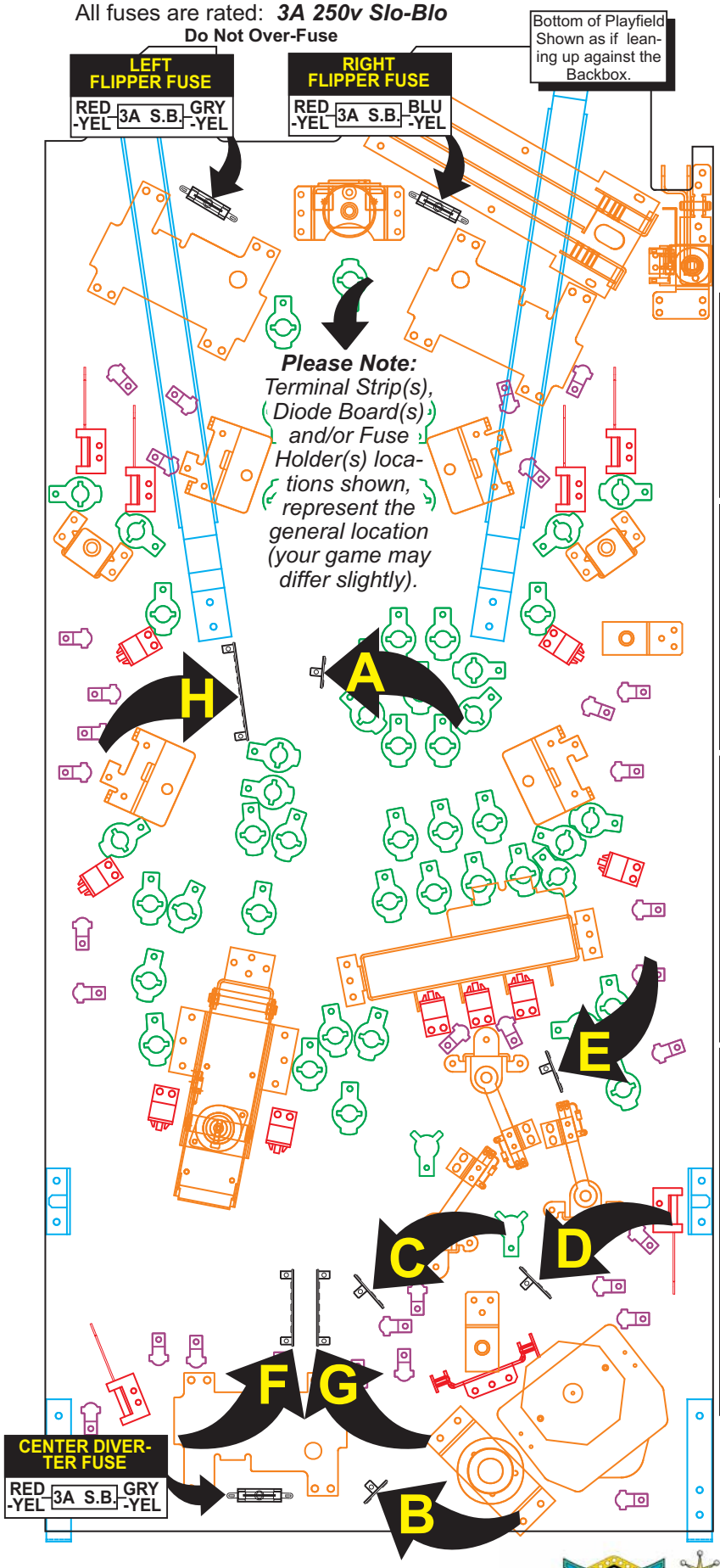

Explanation:

All switches, lamps, coils require diodes. The diodes not physically located on the switch, lamp or coil are located on Terminal Strips or Diode Bd. under the playfield. The Switch & Lamp Matrix Grids also note which switch or lamp has a diode on a Terminal Strip (noted by **"DOTS"** meaning: "Diode on Terminal Strip") or Diode Board (noted by **"DODB"** meaning: "Diode on Diode Board").

Note: This game there is no Diode Board used.

A H.R. Casino Terminal Strip: Switch 20 4-Bank Drop Target Right

Switch 20: WHT-YEL; ORG-YEL to GRN-ORG

B H.R. Casino Terminal Strip: Coil 13 (Q13) Magnet Top Orbit

Coil 13: BLU-GRN BLK; VIO-YEL BLK

C H.R. Casino Terminal Strip: Lamp 13 Left Turbo (Pop) Bumper

Lamp 13: YEL-GRN BLK; BLK; RED-BLK

D H.R. Casino Terminal Strip: Lamp 14 Right Turbo (Pop) Bumper

Lamp 14: YEL-BLU BLK; BLK; RED-BLK

E H.R. Casino Terminal Strip: Lamp 15 Bottom Turbo (Pop) Bumper

Lamp 15: RED-BLK; BLK; YEL-VIO BLK

F H.R. Casino Terminal Strip: Coils 27 & 28 (Q27. Q28) Stepper Motor Pos. 2 & 3

Coil 28: BLK-YEL BLK
Coil 27: GRY-RED WHT (JUMPER TO TERMINAL STRIP "G"); BLK-ORG GRN

G H.R. Casino Terminal Strip: Coils 26 & 29 (Q26. Q29) Stepper Motor Pos. 1 & 4

Coil 29: BLK-GRN BLU
Coil 26: WHT & WHT (JUMPER TO TERMINAL STRIP "F"); BLK-RED RED

H H.R. Casino Terminal Strip: Switches 17-19 4-Bank D/T Left, Mid. Left, Mid. Right

Sw. 19: ORG to GRN-ORG; WHT-ORG
Sw. 18: ORG-RED to GRN-ORG; WHT-RED
Sw. 17: ORG-BRN to GRN-ORG; WHT-BRN

See the Pink Pages, Playfield - General Parts (Below) (Page 54) for Terminal Strips, Diodes, Fuses and Fuse Holders Part Nºs.

2-Flipper Circuit Wiring Diagram

The **White Star Board System**™ has allowed us to *simplify* the *Flipper Circuit* to the point where we have *eliminated the Flipper Board* all together. The *Flipper Circuit* is now configured the same as any other Solenoid Drive Circuit.

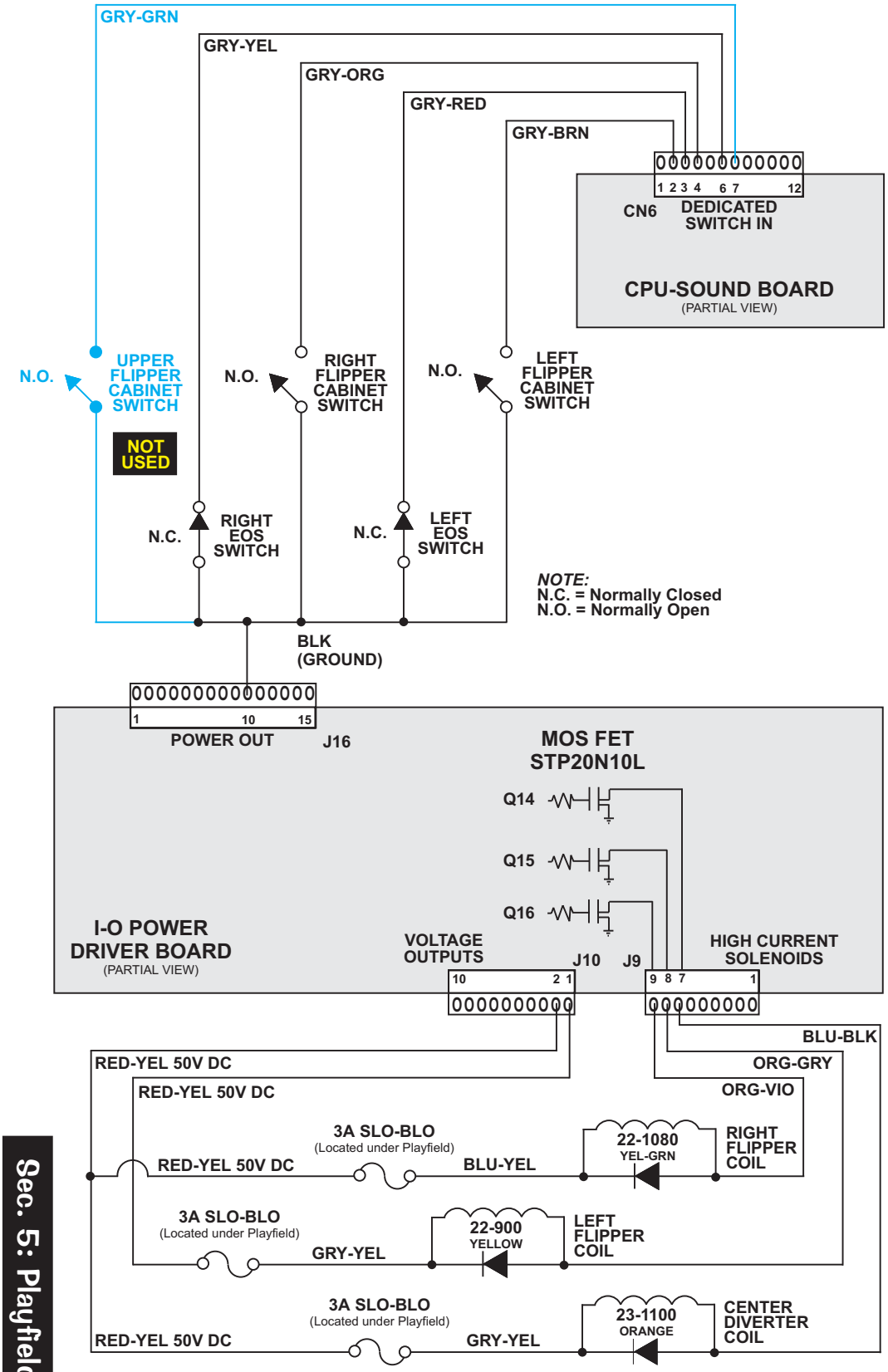

Technical Overview

Our ***Flipper System*** uses one supply voltage (50v DC) for both ***kick*** & ***hold***. Once the **Game CPU** detects a Flipper Cabinet Switch closure (during game play) it applies a 40*msec* pulse to the gate of the Flipper Drive Transistor (STP-20N10L). If it continues to detect a Flipper Cabinet Switch closure *(the player holding the button in)* it will continue to pulse the flipper drive transistor 1*msec* every 12*msecs* for the duration of the hold cycle.

The **E.O.S.** (End-Of-Stroke) **Switch** serves the same function as before as it prevents foldback when the player has the flipper energized to capture balls. The **E.O.S. Switch** is a normally closed switch which opens approximately 1/16" when the flipper is energized. The **Game CPU** will detect a switch closure if the flipper bat is forced back by a high velocity shot or rebound on the playfield and will apply another 40*msec* pulse of 50v DC to the coil.

Note: *If an Upper Flipper is used, the Flipper Button on the side of the Upper Flipper will have a* ***"Double-Stacked" E.O.S. Switch****. This allows the player to push the Flipper Button half-way down to energize only the Lower Flipper; pushing the Flipper Button all the way down will energize both the Lower & Upper Flippers.*

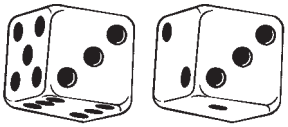

Cabinet Wiring

Transformer Power Wiring Diagram

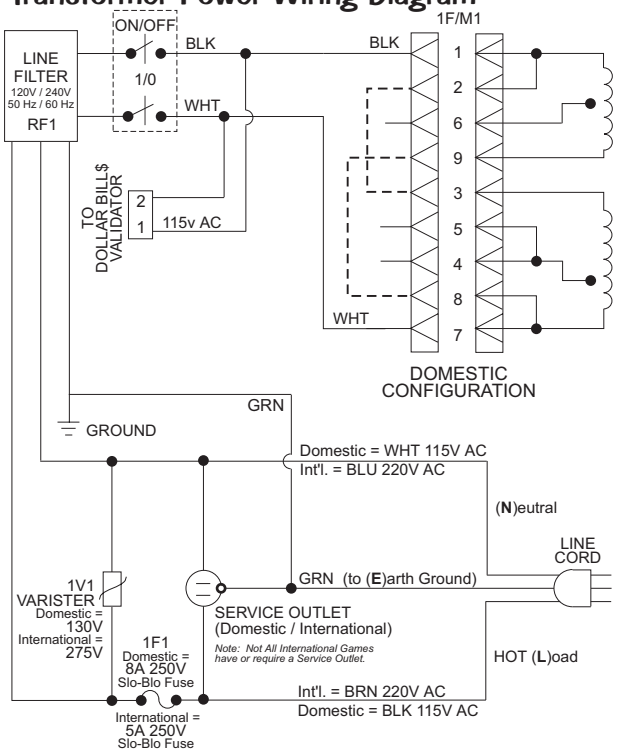

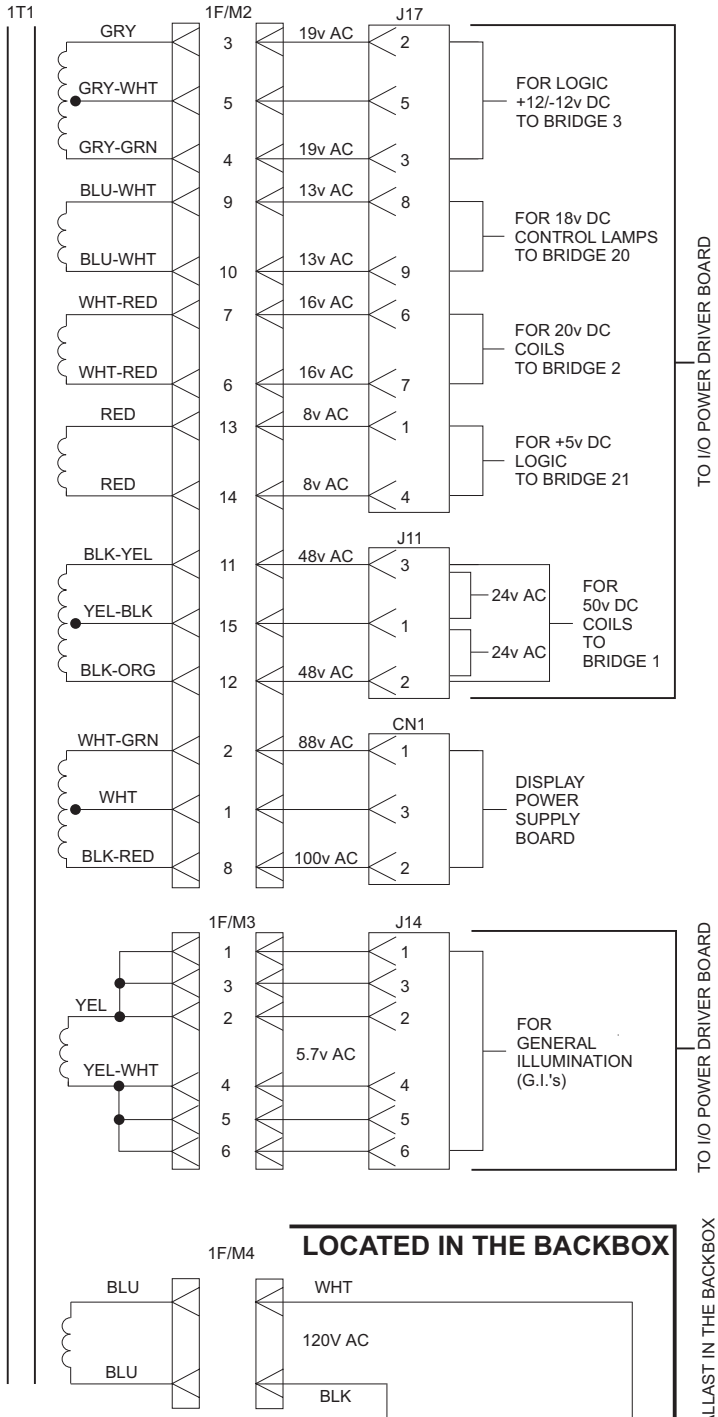

JUMPERS FOR VOLTAGE VARIATION

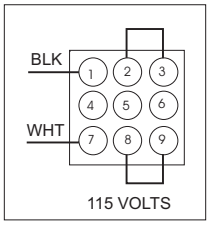

<<<
CONFIGURATON FOR DOMESTIC 115V
<<<

CONFIGURATION OF 220V OR LOWER LINE VOLTAGES FOR INTERNATIONAL USE

EXPORT/ HIGH LINE VOLTAGE 230/218/206 VOLTS

1F1= 5A 250V SLO BLO
1V1= 275V VARISTOR

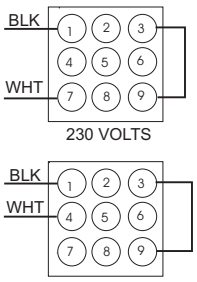

1F1= 8A SLO BLO
1V1= 130V VARISTOR

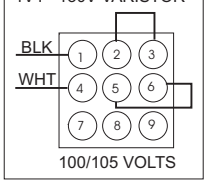

<<<
CONFIGURATON FOR JAPAN or LOW LINE VOLTAGE
<<<

Cabinet / Coin Door Wiring Diagram

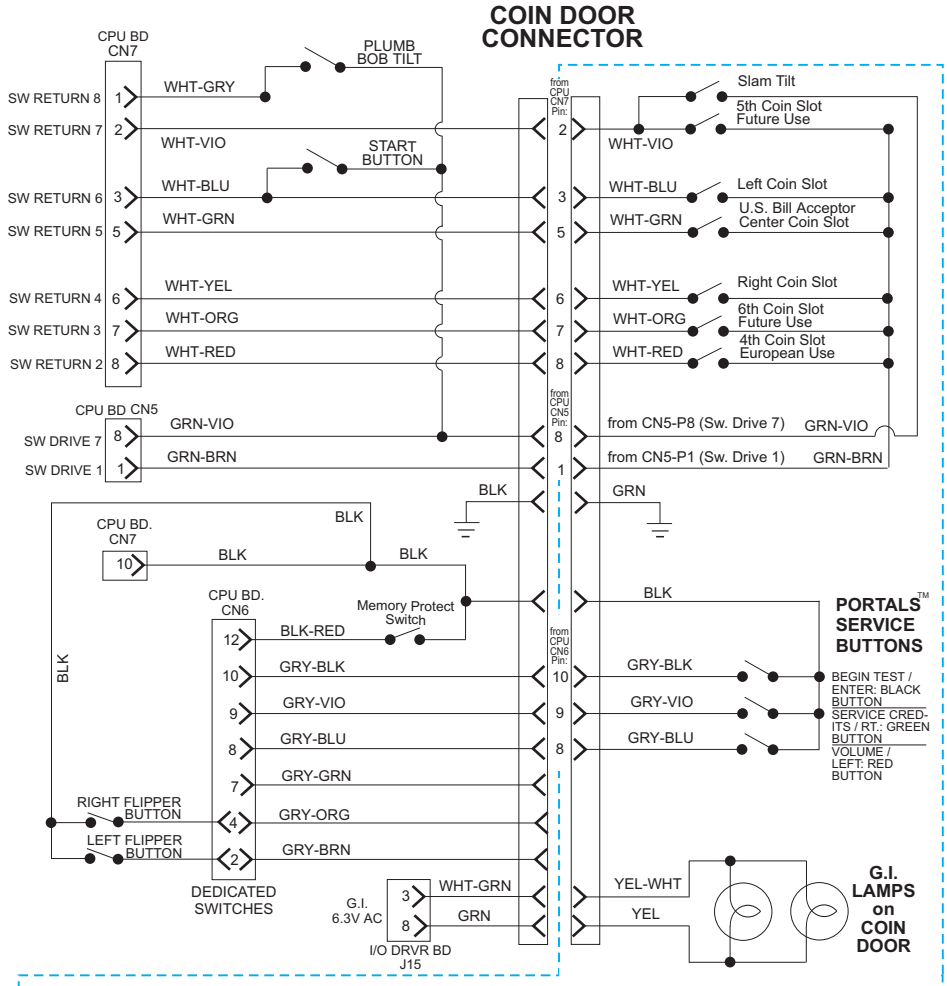

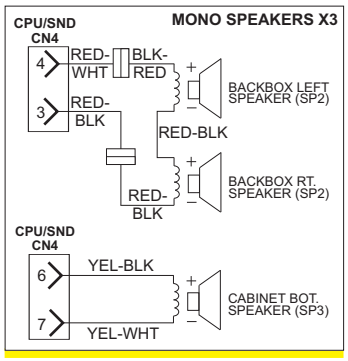

TO COIN METER

J16-7 +5VDC I/O DRVR BD	22	RED
J7-10 Q24 I/O DRVR BD	78	VIO-GRY
N/C		

FOR THE PRINTER SUB-ASSEMBLY

GROUND	00	BLK
J16-7 +5VDC I/O DRVR BD	22	RED
J16-3 +12VDC I/O DRVR BD	82	GRY-RED

UK ONLY: 2 Extra Cabinet Buttons for the Post Save™ Feature are used. The Left Button operates the Left Outlane Ball Deflector. The Right Button operates the Right Outlane Ball Deflector. Both buttons pushed together, operate the Center Up/Down Post. Both buttons are located under the Flipper Buttons.

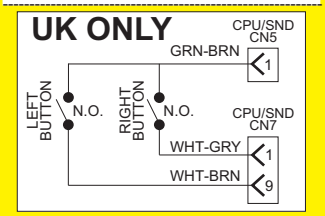

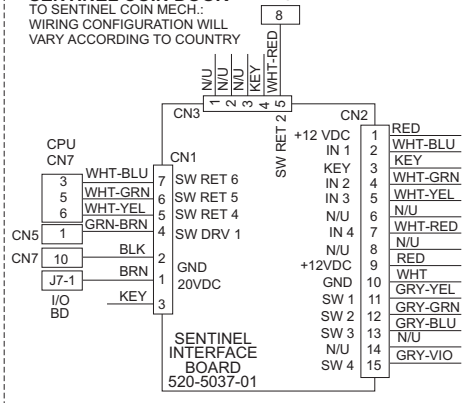

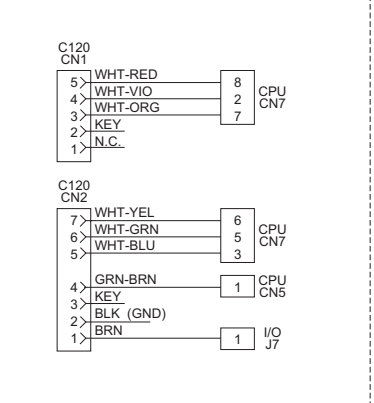

COIN DOOR

PRINTER INTERFACE OPTIONAL

Cable Wiring Harness SPI Part Nº:
036-5408-00
RS-232 Printer Interface Board SPI Part Nº:
520-5069-00

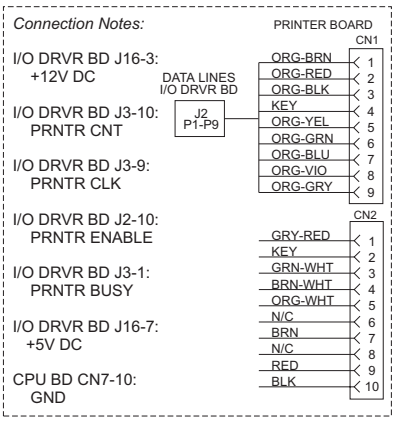

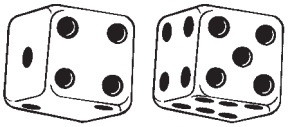

Printed Circuit Boards (PCBs)

Trough Up-Kicker Dual OPTO Boards Theory of Operation & Schematic

As light from the **Transmitter LED1** falls on the **Receiver LED1**, it generates a Positive Bias Voltage (0.7v to 1.5v) which is applied to the **Gate** (**G**) of **Q1 (Fet 2N5460)** turning **Q1** off. When **Q1** is held off, no current flows through **Q2**'s **(2N3906) Base** (**B**). With no *base current,* **Q2** is off and acts as an *OPEN SWITCH*. When the light is interrupted *(BLOCKED)* **R1** (Rec. Bd.) bleeds the gate voltage off of **Q1** allowing it to conduct, switching **Q2** on, which acts as a *CLOSED SWITCH*. The **LED2 (Trans/Rec) Circuit** operates identical as the **LED1 Circuit**.

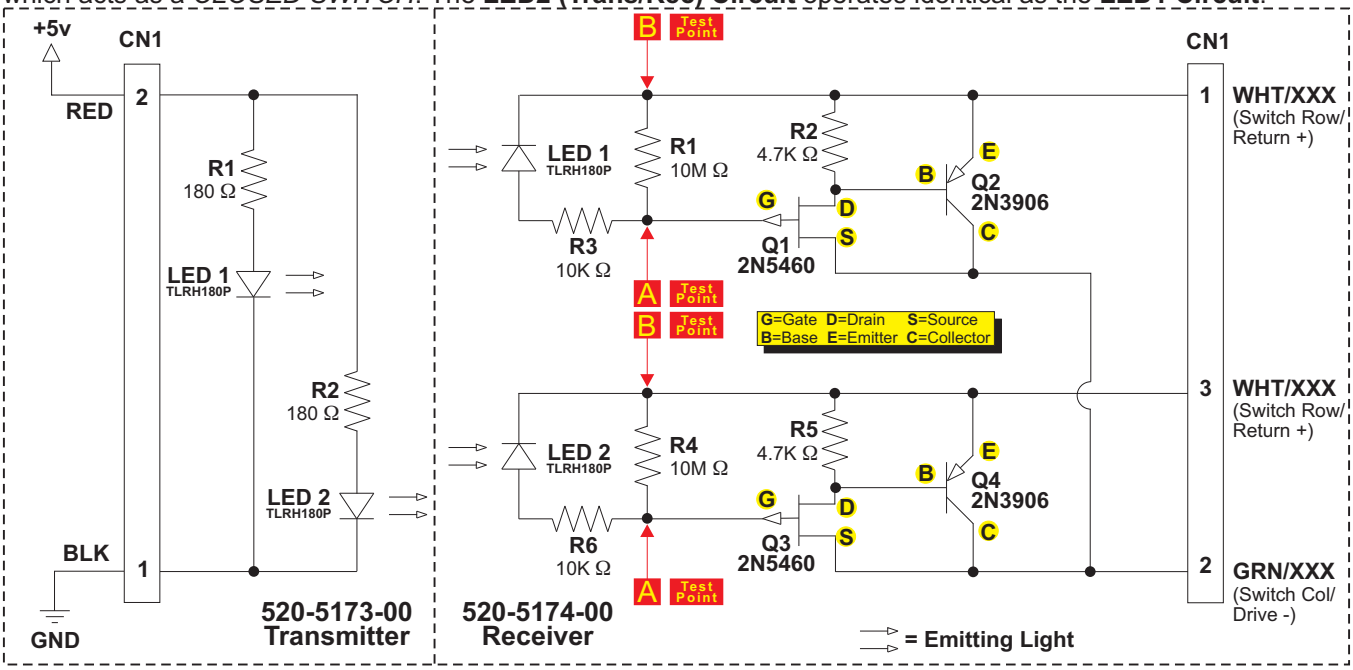

Trough Up-Kicker Dual OPTO Boards Component Layout & Parts

520-5173-00 (TRANS) **Boards Actual Size** **520-5174-00 (REC)**

(Screened Text Printed Larger for Clarity)

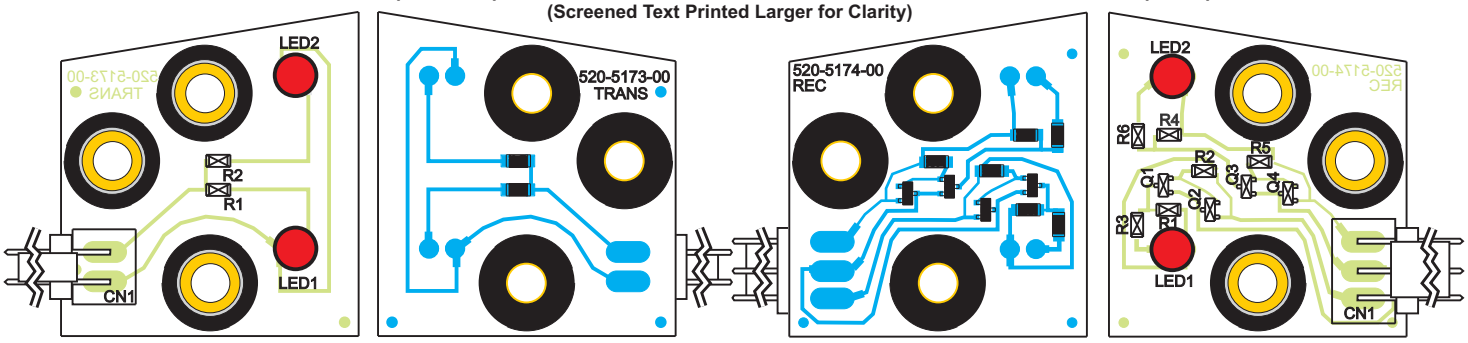

Front Side (LEDs & 2-Pin Connector) | Back Side (Solder / SMDs) | Back Side (Solder / SMDs) | Front Side (LEDs & 3-Pin Connector)

ITEM	QTY	PART NUMBER	REF-DESIGNATOR	DESCRIPTION
A	**1**	**515-0173-00**	**Dual-OPTO Trans. Bd. Assy.**	**PCB Assy.** (with all **Items 1-5**)
—	**1**	**520-5173-00**	**Dual-OPTO Trans. Bd.**	**PCB Assy.** (with Items **1-3** only)
1	2	165-5052-00	LED1, LED2	**LED TLRH180P** (**Ultra Bright Red**)
2	2	121-5067-00	R1, R2	180 Ω 1/8W Chip Res. (CRCW)
3	1	045-5111-02	CN1	2X, .156" Rt. Angle (26-60-5020) Conn.
4	3	545-5518-00	n/a	OPTO PCB Rubber Gromment
5	3	530-5308-02	n/a	OPTO PCB Brass Tube Spacer
B	**1**	**515-0174-00**	**Dual-OPTO Rec. Bd. Assy.**	**PCB Assy.** (with all **Items 1-9**)
—	**1**	**520-5174-00**	**Dual-OPTO Rec. Bd.**	**PCB Assy.** (with **Items 1-7** only)
1	2	165-5052-00	LED 1, LED 2	**LED TLRH180P** (**Ultra Bright Red**)
2	2	121-5082-00	R1, R4	10M Ω 1/8W Chip Res. (CRCW)
3	2	121-5083-00	R2, R5	4.7K Ω 1/8W Chip Res. (CRCW)
4	2	121-5011-00	R3, R6	10K Ω 1/8W Chip Res. (CRCW)
5	2	110-5006-00	Q1, Q3	2N5460, Transistor (P-FET SOT-23)
6	2	110-0086-00	Q2, Q4	**2N3906**, Transistor
7	1	045-5111-03	CN1	3X, .156" Rt. Angle (26-60-5030) Conn.
8	3	545-5518-00	n/a	OPTO PCB Rubber Gromment
9	3	530-5308-02	n/a	OPTO PCB Brass Tube Spacer

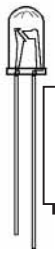

Replacement Part:
LED TLRH180P
(T1-3/4 GaAlAs)
SPI Part №:
165-5052-00

OPTO Troubleshooting

1. Volt Meter Test (indicates normal operating condition):

A. **OPEN OPTO** (Light Falling on LED) = *SWITCH OPEN*. Place meter leads across points **A** and **B** on the **LED1 Circuit** (Refer to Schematic Drawing on previos page, 520-5174-00 Receiver Side). It should read approximately 0.8 - 1.2v DC. The **LED2 Circuit** operates the same.

B. **CLOSED OPTO** (Light Blocked) = *SWITCH CLOSED*. Place meter leads across points **A** and **B** on the **LED1 Circuit** (Refer to Schematic Drawing on previous page, 520-5174-00 Receiver Side). It should read approximately 0.0 - 0.1v DC. The **LED2 Circuit** operates the same.

2. Oscilloscope Test (indicates normal operating condition):

Fig. A

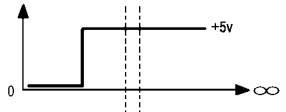

Fig. B

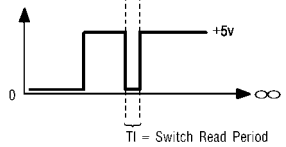

A. **OPEN OPTO** (Light Falling on LED) = *SWITCH OPEN*. Place Scope lead at **Pin-1** of OPTO Rec. Board with Scope Grounded (see Schematic). The Scope should display a **STEADY +5v** as shown in **Fig. A**, Wave Form Diagram.

B. **CLOSED OPTO** (Light Blocked) = *SWITCH CLOSED*. Place Scope lead at **Pin-1** of OPTO Rec. Board with Scope Grounded (see Schematic). The Scope should display a **PULSE STREAM** indicating **Q2** has switched "On" as shown in **Fig. B**, Wave Form Diagram. This is your Switch Drive Pulse.

3. Bench Test (See Fig. C):

Please Note: To perform this test you must use a spare 560Ω Pull-Up Resistor, SPI Nº: 121-5047-00

Disconnect the OPTO Transmitter / Receiver Board from the circuit. Connect one side of a 560Ω Pull-Up Resistor to **Pin-1** of the OPTO Receiver Bd. and the other side of the resistor to a 5v DC source. Connect **Pin-2** to GND. Connect a +5v DC source to **Pin-1** of the Transmitter & GND to **Pin-2**. Align with the Receiver OPTO approx. 3" distance. Using your Volt-Meter or an Oscilloscope, monitor **Pin-1** while *BLOCKING* and *UNBLOCKING* the ***BEAM*** from the Trans. The output will be approx. +5v DC when the ***BEAM IS NOT BLOCKED*** and approx. 0v when the ***BEAM IS BLOCKED.***

Fig. C

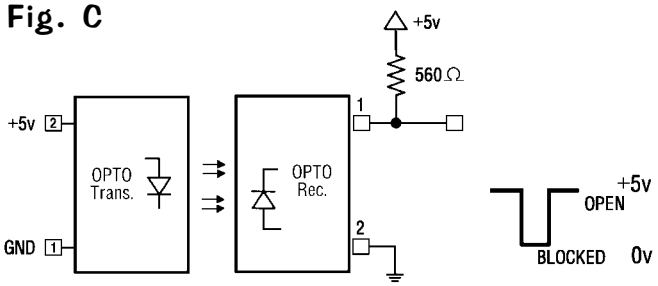

Trough Dual OPTO Boards Alignment / Test for LED1

When a working **OPTO** is installed and connected in a game, the transmitter should light (LED1 lower & LED2 upper) when the power is switched on. With the playfield in Service Position #1 (playfield lifted up in the half-way position resting on the Prop Rod or edge slide support brackets) and the game on, the LED lights should show up as a **BRIGHT RED RINGS** through the back of the Receiver Board around the **Receivers LED1 & LED2** (See **Fig. 1**). Testing only **LED1:** With the game in ***Switch Test Mode***, lifting the Trough Plunger with a fingertip should block the **BEAM** and cause the Switch Position to trigger (See **Fig. 2**). View **Fig. 2a** & **2b** (on the next page) for a sectional view of the Light Path (note alignment) and what happens as a ball breaks the light beam.

Fig. 1

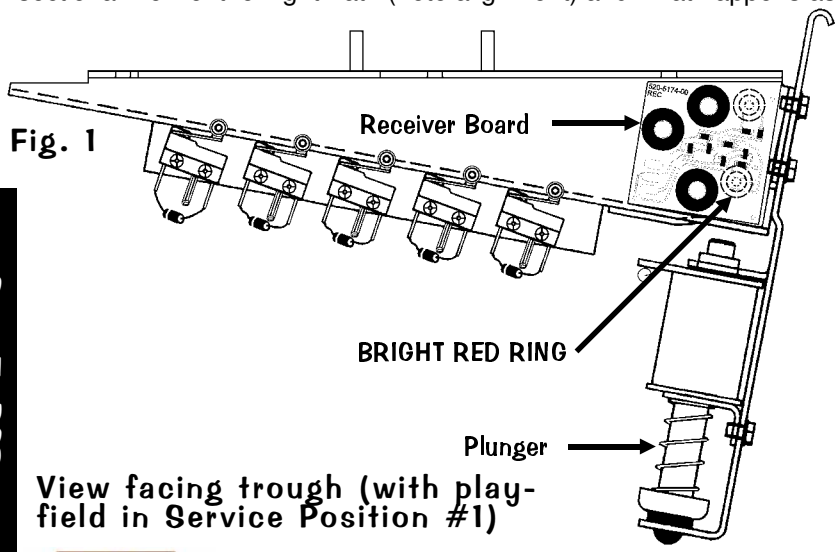

View facing trough (with playfield in Service Position #1)

Fig. 2

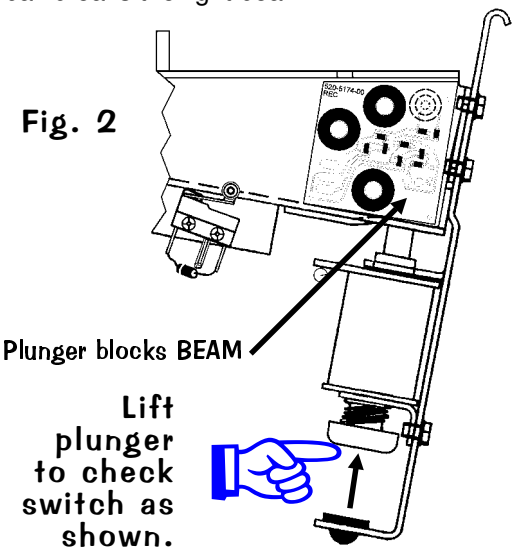

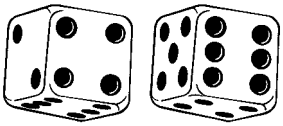

Sectional view from right (Fig. 2a & 2b)

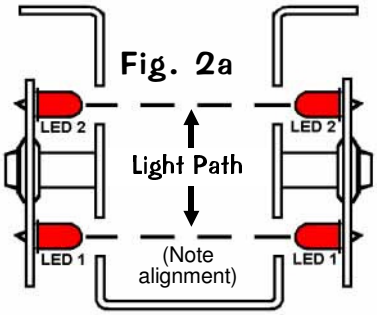

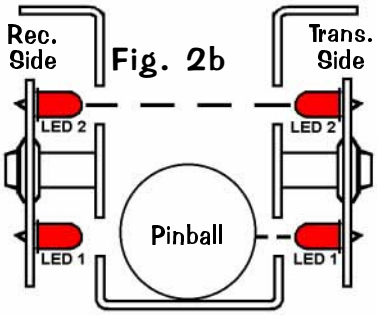

Trough Dual OPTO Boards Alignment / Test for LED2

When a working **OPTO** is installed and connected in a game, the transmitter should light (LED1 lower & LED2 upper) when the power is switched on. With the playfield in Service Position #1 (playfield lifted up in the half-way position resting on the Prop Rod or edge slide support brackets) and the game on, the LED lights should show up as a **BRIGHT RED RINGS** through the back of the Receiver Board around the **Receivers LED1 & LED2** (See **Fig. 1, previous page**). Testing only **LED2:** *TO PERFORM THIS TEST, A PINBALL MUST BE IN THE BALL TROUGH.* With the game in ***Switch Test Mode***, lifting the Trough Plunger with a finger tip should block the **BEAM** on LED2 and cause the Switch Position to trigger (See **Fig. 3**). View **Fig. 3a** & **3b** for a sectional view of the Light Path (note alignment) and what happens as a "double-stacked" ball scenario breaks the light beam.

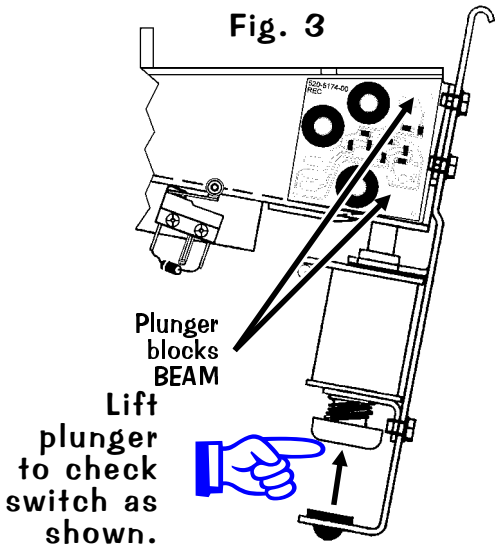

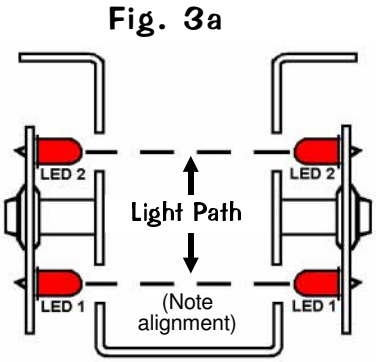

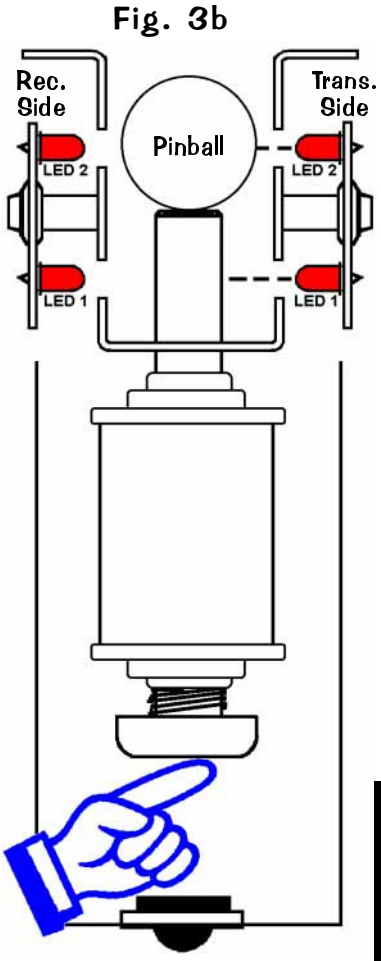

I M P O R T A N T

If replacement of ***LED*** *is required, insure that is* ***mounted correctly before and after soldering*** *(See* ***Fig. 4a*** / ***4b****).*

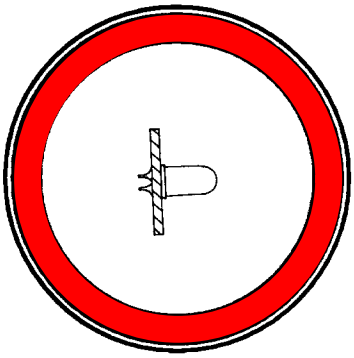

Fig. 4a
Correct Position

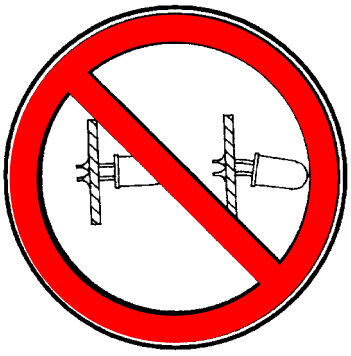

Fig. 4b
Incorrect Position

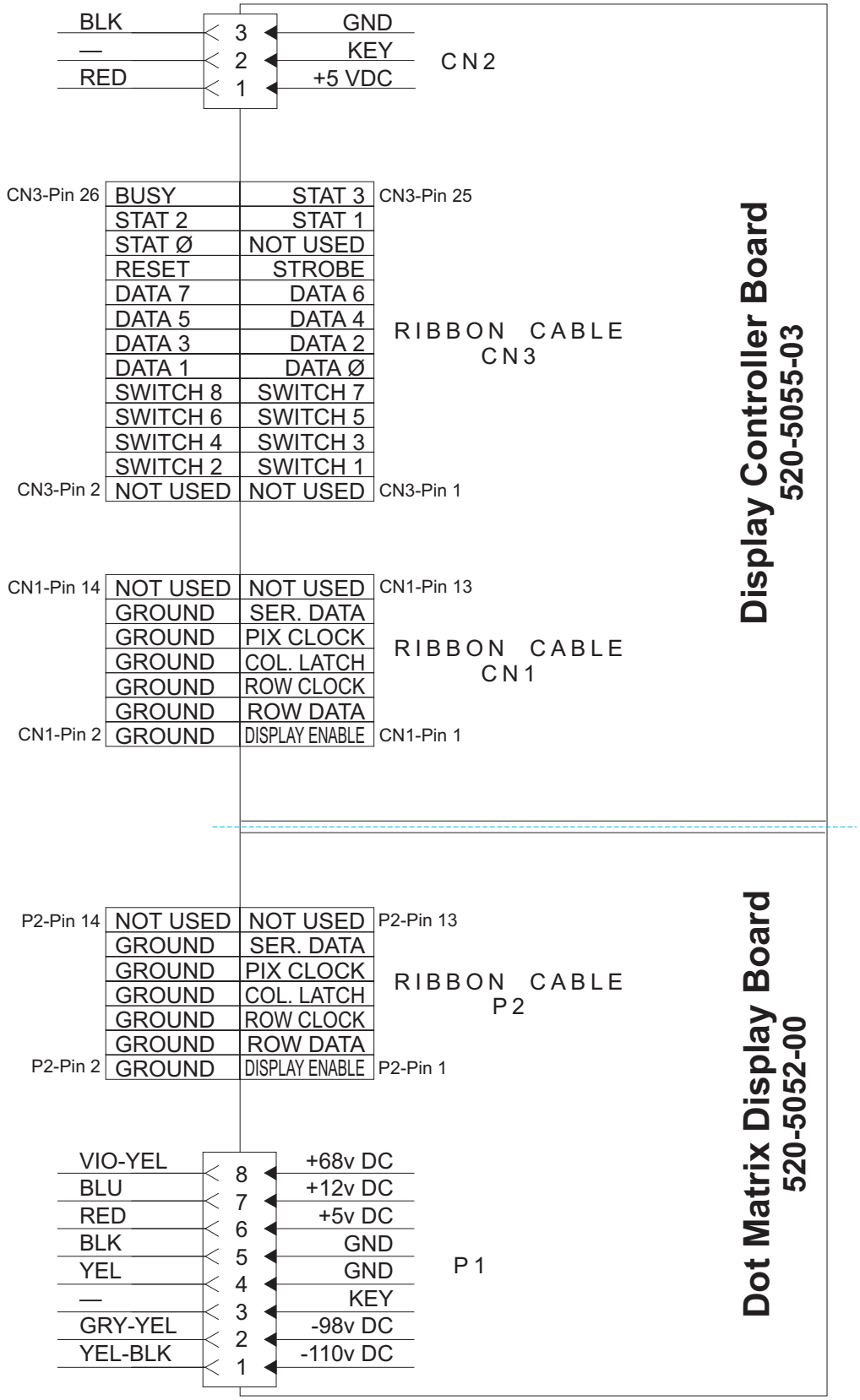
BLK
—
RED
3
2
1
GND
KEY
+5 VDC
CN2
CN3-Pin 26
BUSY
STAT 3
CN3-Pin 25
STAT 2
STAT 1
STAT Ø
NOT USED
RESET
STROBE
DATA 7
DATA 6
DATA 5
DATA 4
DATA 3
DATA 2
DATA 1
DATA Ø
SWITCH 8
SWITCH 7
SWITCH 6
SWITCH 5
SWITCH 4
SWITCH 3
SWITCH 2
SWITCH 1
CN3-Pin 2
NOT USED
NOT USED
CN3-Pin 1
RIBBON CABLE
CN3
CN1-Pin 14
NOT USED
NOT USED
CN1-Pin 13
GROUND
SER. DATA
GROUND
PIX CLOCK
GROUND
COL. LATCH
GROUND
ROW CLOCK
GROUND
ROW DATA
CN1-Pin 2
GROUND
DISPLAY ENABLE
CN1-Pin 1
RIBBON CABLE
CN1
Display Controller Board
520-5055-03
P2-Pin 14
NOT USED
NOT USED
P2-Pin 13
GROUND
SER. DATA
GROUND
PIX CLOCK
GROUND
COL. LATCH
GROUND
ROW CLOCK
GROUND
ROW DATA
P2-Pin 2
GROUND
DISPLAY ENABLE
P2-Pin 1
RIBBON CABLE
P2
VIO-YEL
BLU
RED
BLK
YEL
—
GRY-YEL
YEL-BLK
8
7
6
5
4
3
2
1
+68v DC
+12v DC
+5v DC
GND
GND
KEY
-98v DC
-110v DC
P1
Dot Matrix Display Board
520-5052-00

Display Power Supply Board Schematic

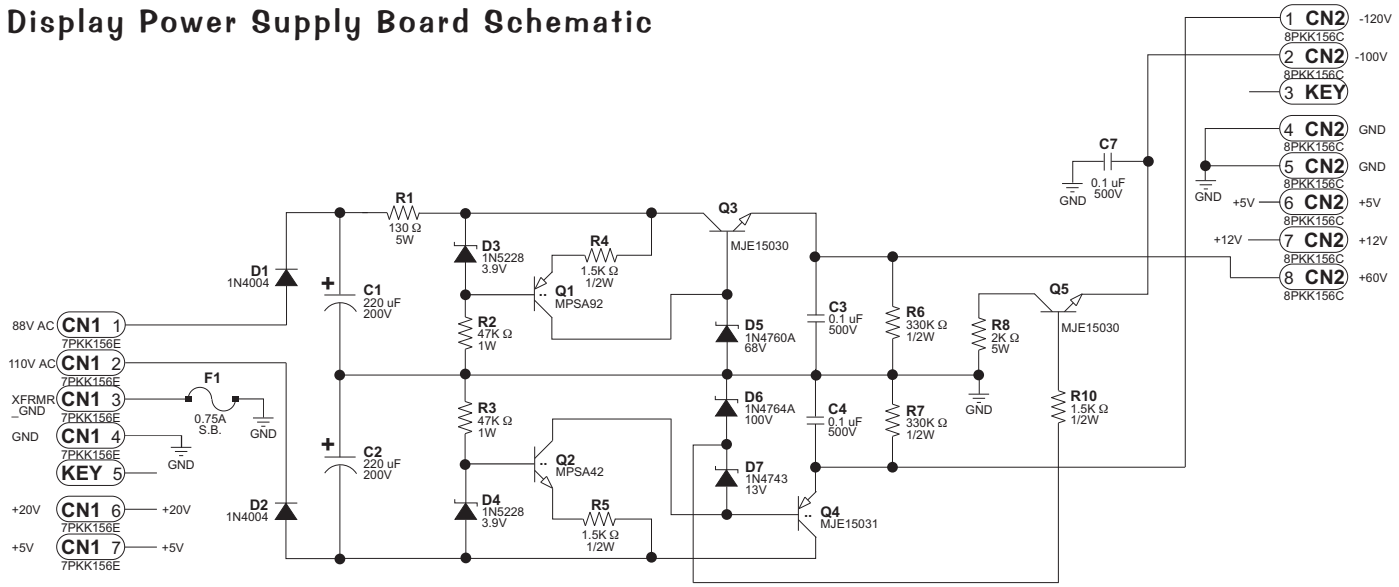

Display Power Supply Board Component Layout & Parts

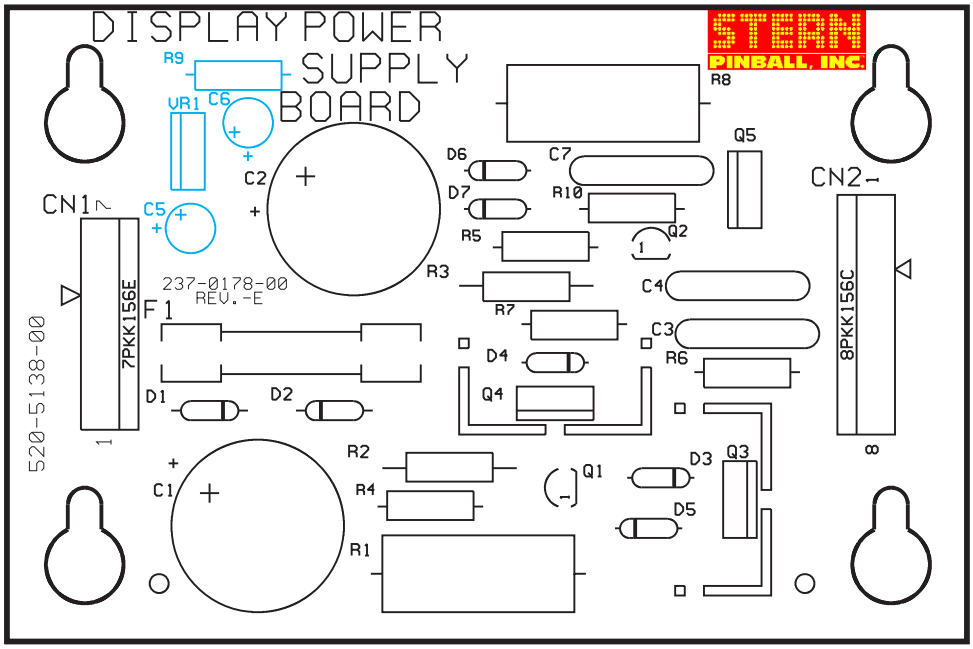

ITEM	QTY	PART NUMBER	REF-DESIGNATOR	DESCRIPTION (NS = Not Stuffed)
—	**1**	**520-5138-00**	**Display Power Supply Board**	**Complete PCB Assembly**
1	1	200-5000-17	F1	3/4A (0.75A) S.B. Fuse
2	2	535-5000-11	Q3, Q4	Heatsinks - AAVID #563002
3	2	125-5044-00	C1, C2	220uF, 200v, Radial Lytic Cap.
4	3	121-5038-00	R4, R5, R10	1.5K Ω 1/2W Res. (R9: NS)
5	2	121-5059-00	R6, R7	330K Ω 1/2W Res.
6	2	121-5060-00	R2, R3	47K Ω 1W Res.
7	1	121-5061-00	R1	130 Ω 5W Res.
8	1	121-5062-00	R8	2K Ω 5W Res.
9	2	112-0053-00	D3, D4	1N5228, 3.9v, Diode
10	1	112-0062-00	D5	1N4760A, 68v, Diode
11	1	112-0049-00A	D6	1N4764A, 100v, Diode
12	1	112-0061-00	D7	1N4743, 13v, Diode
13	1	110-0100-00	Q1	MPSA92, Transistor
14	1	110-0082-00	Q2	MPSA42, Transistor
15	3	125-5035-00	C3, C4, C7	0.1uF, 500v, Ceramic Disk Cap.
16	1	110-0103-00	Q4	MJE15031, Transistor
17	2	110-0101-00	Q3, Q5	MJE15030, Transistor
18	0	125-5003-00	(C5, C6: NS)	22uF, 35v, Rad Lytic Cap
19	0	124-5003-00	(VR1: NS)	7812CT
20	1	045-5015-08	CN2	8PKK156 (PIN3=KEY)
21	2	112-5003-00	D1, D2	1N4004, Diode
22	1	045-5015-07	CN1	7PKK156E (PIN5=KEY)
23	2	240-5008-00	Q3, Q4	#6-32 KEPS Nut
24	2	237-5501-00	Q3, Q4	#6-32 X 3/8" PPH Screw
25	2	205-0004-00	F1	Fuse Clips

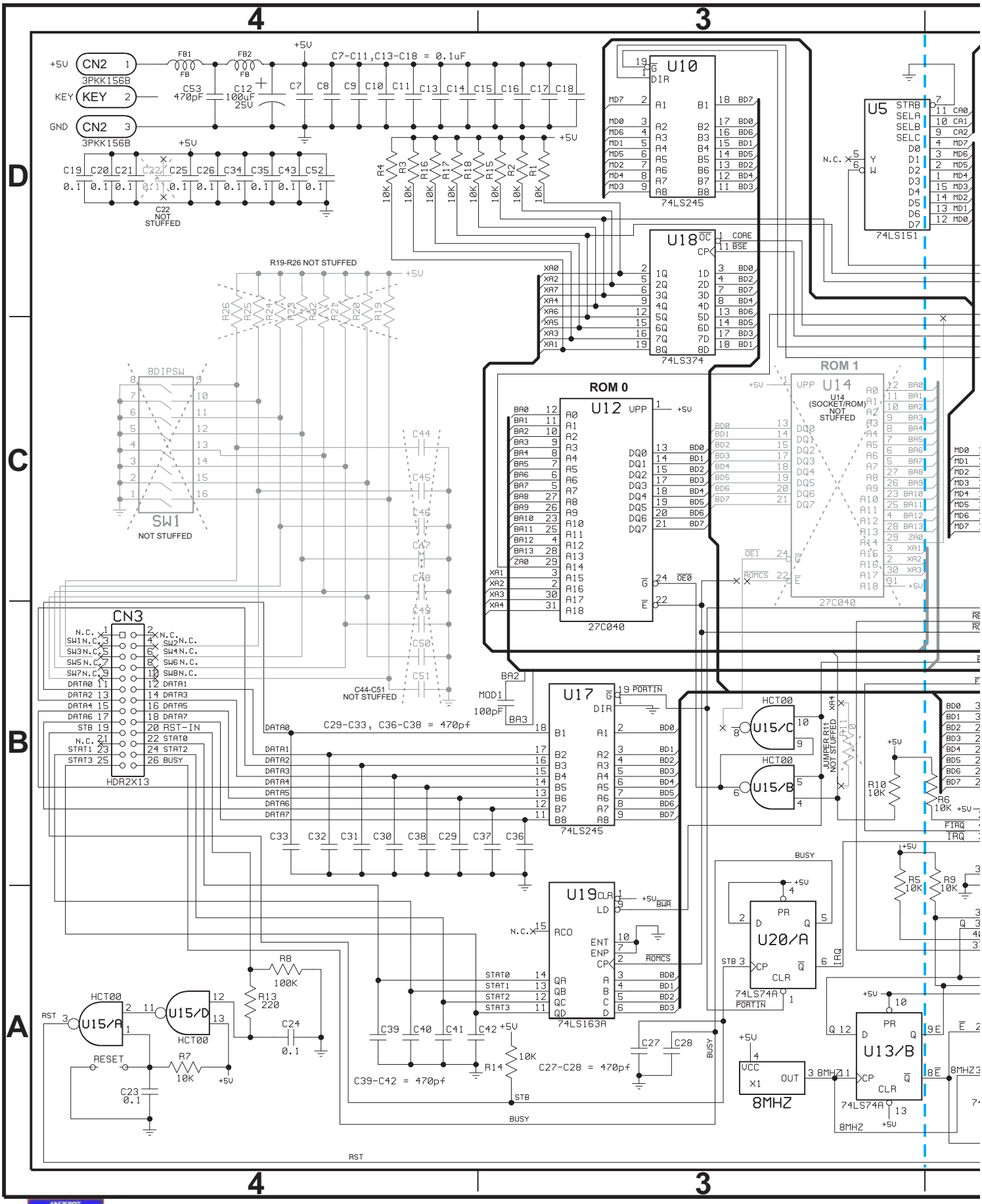
4
3
D
C
B
A
CN2
3PKK156B
KEY
GND
FB1
FB2
FB
C53 470pF
C12 100uF 25V
C7-C11,C13-C18 = 0.1uF
C22 NOT STUFFED
R19-R26 NOT STUFFED
8DIPSW
SW1
NOT STUFFED
CN3
HDR2X13
C44-C51 NOT STUFFED
C29-C33, C36-C38 = 470pf
C39-C42 = 470pf
C27-C28 = 470pf
U10
74LS245
U18
74LS374
U5
74LS151
ROM 0
U12
27C040
ROM 1
U14
(SOCKET/ROM) NOT STUFFED
27C040
U17
74LS245
U19
74LS163A
U15/A
U15/B
U15/C
U15/D
HCT00
U20/A
74LS74A
U13/B
74LS74A
8MHZ
JUMPER R11 NOT STUFFED
RESET
RST
BUSY
STB
PORTIN
ROMCS
IRQ
FIRQ

JACKPOT
STERN
PINBALL, INC.
104

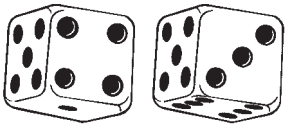

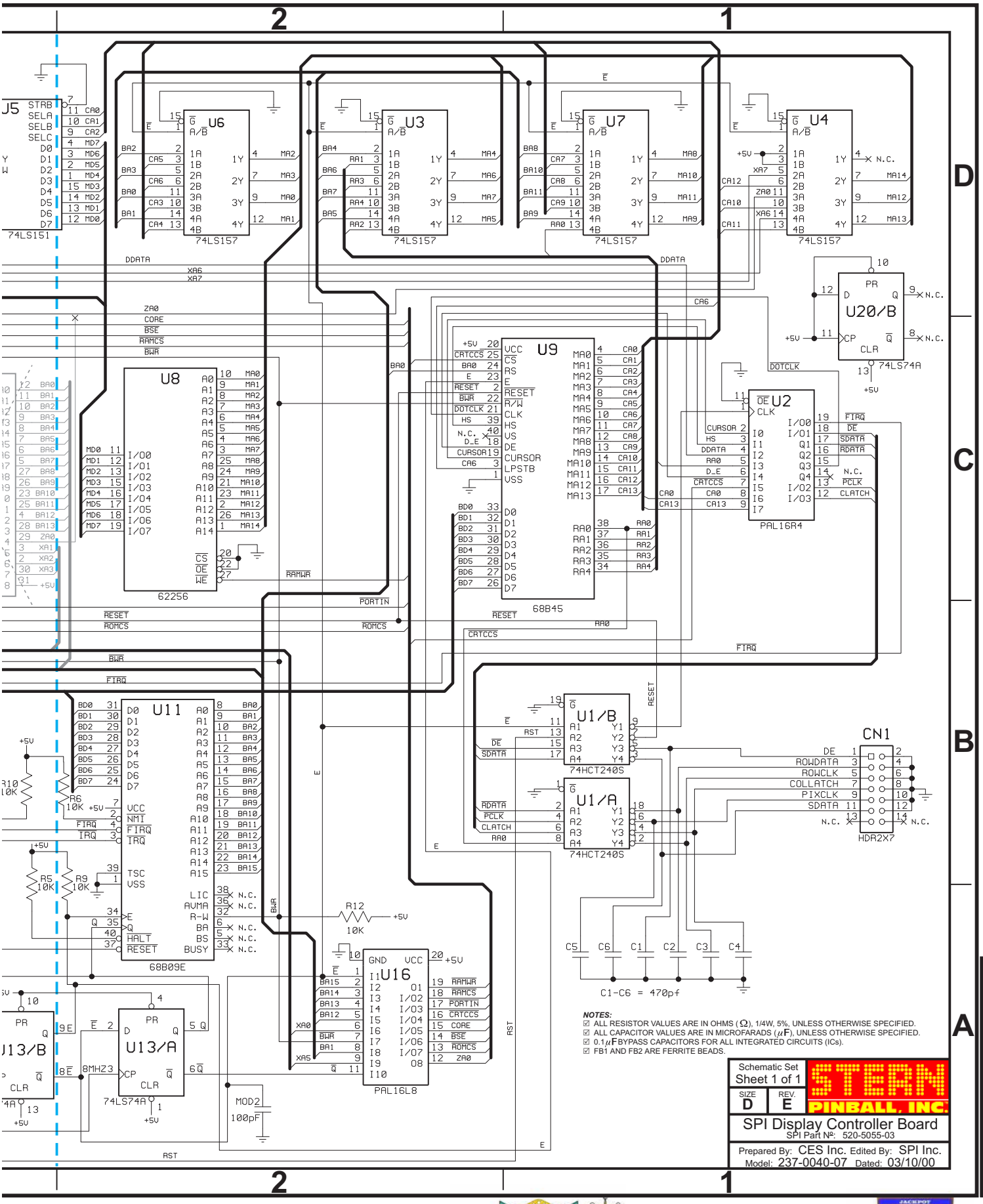
U5
74LS151
U6
74LS157
U3
74LS157
U7
74LS157
U4
74LS157
U20/B
74LS74A
U8
62256
U9
68B45
U2
PAL16R4
U11
68B09E
U1/B
74HCT240S
U1/A
74HCT240S
CN1
HDR2X7
U16
PAL16L8
U13/B
U13/A
74LS74A
C1-C6 = 470pf
NOTES:
☑ ALL RESISTOR VALUES ARE IN OHMS (Ω), 1/4W, 5%, UNLESS OTHERWISE SPECIFIED.
☑ ALL CAPACITOR VALUES ARE IN MICROFARADS (μF), UNLESS OTHERWISE SPECIFIED.
☑ 0.1μF BYPASS CAPACITORS FOR ALL INTEGRATED CIRCUITS (ICs).
☑ FB1 AND FB2 ARE FERRITE BEADS.
Schematic Set
Sheet 1 of 1
SIZE D
REV. E
STERN PINBALL, INC.
SPI Display Controller Board
SPI Part Nº: 520-5055-03
Prepared By: CES Inc. Edited By: SPI Inc.
Model: 237-0040-07 Dated: 03/10/00

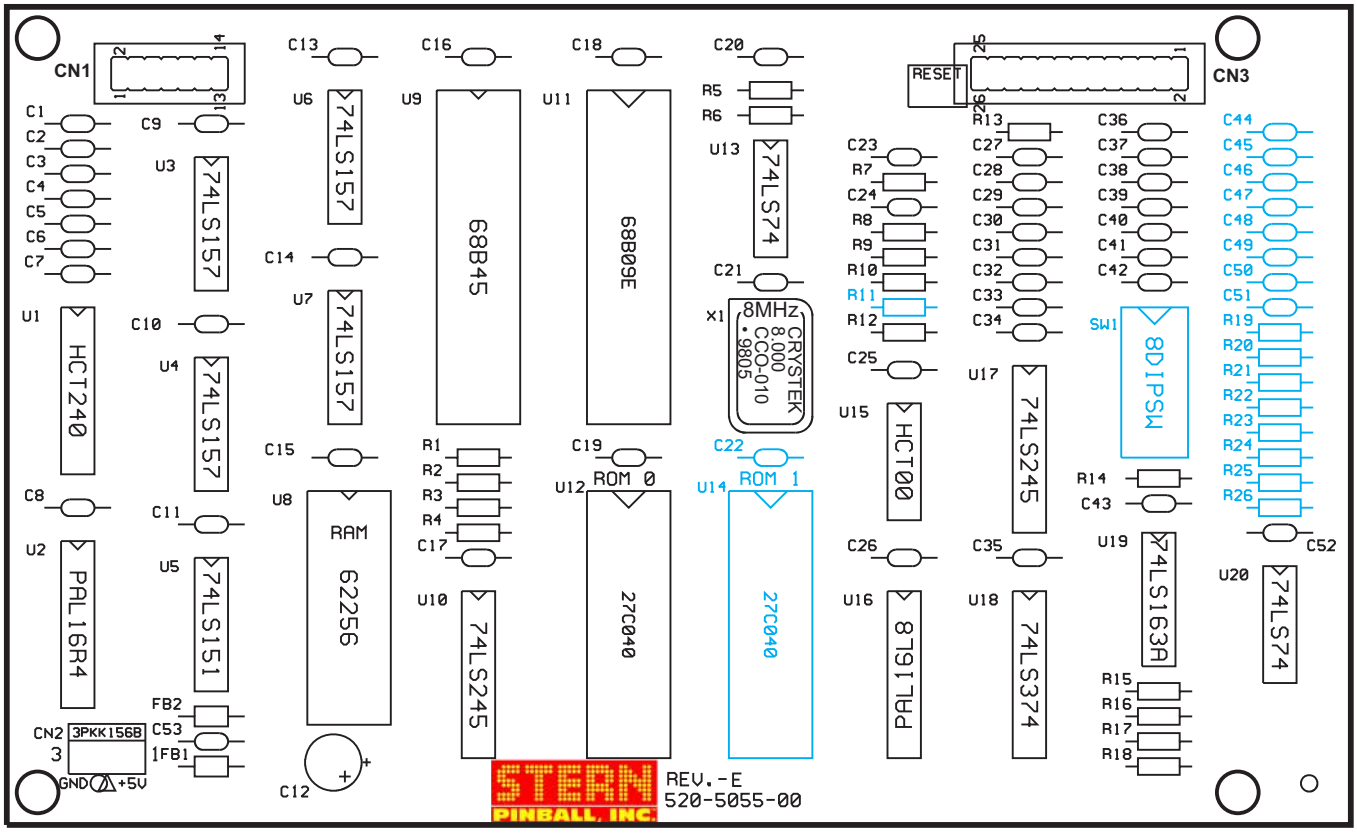

Actual Board Size 8.05" X 4.9"

ITEM	QTY	PART NUMBER	REF-DESIGNATOR	DESCRIPTION (NS = Not Stuffed)
—	**1**	**520-5055-03**	**Display Controller Board (FCC FEB98) Rev. E**	**Complete PCB Assembly**
1	1	077-5217-00	U12 (U14: NS)	32-Pin, IC Dip Socket
2	1	100-0397-00	U8	32K X 8 Static RAM (62256L-10PC)
3	1	100-0189-01	U11	68B09E
4	1	100-0233-00	U9	68B45
5	1	100-0351-00	U15	74HCT00
6	1	100-5001-00	U1	74HCT240
7	1	100-5000-00	U5	74LS151
8	4	100-0046-00	U3, U4, U6, U7	74LS157
9	1	100-0049-00	U19	74LS163A
10	2	100-0058-00	U7, U10	74LS245
11	1	100-0064-00	U18	74LS374
12	2	100-0037-00	U13, U20	74LS74
13	1	965-0107-00	**U16 - ORANGE DOT** (Note the type of PAL)	PAL16L8 (15CN), (Programmed) **- ORANGE DOT**
14	1	965-0108-00	**U2 - ORANGE DOT** (Note the type of PAL)	PAL16R4 (25CN), (Programmed) **- ORANGE DOT**
15	23	125-5031-00	C7>C11, C13>C26, C34, C35, C43, C52 (C22: NS)	.1 uF, (104), Axial Cer. Cap
16	1	121-5051-00	R8	100K Ω 1/4W C.F. Res. 5%
17	15	121-5011-00	R1>R7, R9, R10, R12, R14>R18 (R11: NS)	10K Ω 1/4W Res. 5%
18	1	121-5014-00	R13	220 Ω 1/4W C.F. Res. 5%
19	0	n/a	(R19>R26: NS)	
20	14	125-5028-00	C1>C6, C27>C33, C36>C42, C53 (C44>C51: NS)	470pF, (471), Axl. Cap
21	2	n/a	FB1, FB2	Ferrite Bead (2743001182)
22	1	125-5015-00	C12	100uF, 25v, Cap. (Radial Elec.)
23	1	045-5015-26	CN3	13-Pin, Dual Row .1" HDR Conn.
24	1	045-5015-03	CN2	3-Pin, KK-156 Conn. (540445-3)
25	1	045-5015-02	CN1	7-Pin, Dual Row .1" Hdr. Conn.
26	1	140-0013-00	X1	8Mhz Clock Oscillator
27	0	Not Used	(SW1: NS)	(SW1)
28	1 (See Pg. DR. ❸ Table)		U12 (ROM 0) (U14 ROM 1: NS)	4MB ROM
29	1	n/a	U1 (@ Pins 9 & 10)	100pF, Cap.

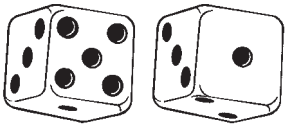

5v Supply:
An AC voltage of approximately 9v comes into the board at [**J17-**(1-4)] this AC voltage is then *full-wave rectified* by bridge **BRDG 21** and filtered by Capacitor **C203**. The resulting voltage is 11v DC which is inserted into a linear voltage regulator for the output of 5v DC. This 5v regulated voltage can be adjusted by potentiometer **R116** the voltage should be set to 5.00v. Besides powering the I/O Board the regulated 5 volts supplies power to the CPU / Sound Board, Gas Plasma (Dot Matrix) Display and Plasma (Display) Controller Board. Power for these devices comes off the I/O Board on [**J16**-(4-8)].

+5v, +20v, +50v, +18v, & +12v LED Indicators:
These DC voltages are derived on the I/O Board by rectification and filtering. Each has a **LED** indicating that power is being supplied to each of these voltage sources. The **-12v** supply comes from the same transformer winding as the **+12v** thus it does not have a **LED** indicator.

*** Note** that the +50v & +20v power sources are turned off by the Interlock Switches when the Coin Door is OPEN.*

LED	SUPPLY VOLTAGE
L2	+5
L200	+20v
L201	+50v
L202	+18v
L203	+12v

Reset Circuitry:
The I/O will reset in three (3) cases:

1. The CPU is in reset. The CPU's reset signal is fed into the I/O through connector **J1** and forces the I/O into reset.
2. The 5v supply has fallen below 4.75v.
3. The watchdog is not being fed by the scanning of the light matrix. More specifically **Pin-19** of **U6** must be toggling once every ***50ms*** to prevent the watchdog from resetting. The scanning of the light matrix is controlled by the CPU through **J1**.

LED L204 shows the reset state of the I/O Board. If this **LED** is not lit either the 5v DC is below 4.75v or the CPU/Sound Board is holding the I/O in reset. If the **LED** is flashing this means that the watchdog is not being feed by the CPU/Sound Board and the I/O is oscillating into and out of reset. If the **LED** is continuously on the board is out of reset and communication from the CPU to the lamp matrix is confirmed. Testpoint Blanking is the actual reset signal on the I/O Board. A low voltage indicates that it is in reset this will turn off all Solenoid (Coil) Drivers, Flash Lamps, Lamp Matrix Drivers, Auxiliary Outputs and Flipper Outputs. A high voltage indicates that it is out of reset and normal operation can take place.

Address Decoding:
All Address decoding is done by two **74LS138's (U204 & U205)** (3 of 8 decoder). Both of these must be in operation for the I/O Board to function properly.

Solenoid (Coil) Drivers & Flash Lamps:
J8 & **J9** are high side drivers for driving solenoids and other heavy loads. Each connector has its own buffer driving 8 drivers. **J8** & **J9** consist of **MOSFET Drivers 20N10L** which can easily & safely be tested by clipping one end of a clip-lead to test point **FET TPL1** and then the other to the corresponding gate resistor **R1-R16** (see *Note 1*). This will apply 3.4v to the gate of the **MOSFET Transistor** thus switching it on. **J7** & **J6** each are a bank of 8 low side driver for driving lamps or other lower current solenoids (coils). They use a Bipolar Power Transistor **TIP122** which can also be tested by using **TEST POINT TIP TPL3** and the corresponding resistors **R17-R32*** *(see Note 1).*

***Note 1** • Clip on the resistor side with the white stripe. •• R1 controls Q1, R2 controls Q2, et cetera...*

Auxiliary In & Out:
J2-8 CMOS Outputs sometimes used for a printer interface.
J3-8 CMOS Inputs general purpose inputs.

Lamp Matrix:
J12 has 10 low side drivers for the lamp strobes which consist of **19N06L MOSFETS**. Only one lamp strobe should be low at any time. Again the scanning of the lamp strobes keeps the I/O from resetting. **J13** has 8 high side drivers with each having a status indicator. All the status indicators are logically 'OR'ed together and fed back to the CPU/Sound Board. The status can identify open loads (for example open lamp filaments or intermittent connections) and short circuits. These drivers are also short-circuit protected.

General Illumination (G.I.) Lights:
J15 has 6v AC switched on & off by a relay on the I/O Board. The relay is controlled by **Q200** which supplies power to the 24v coil winding to activate the relay. There are 4 taps on **J15** each fused at 5A for this 6v AC source.

I/OPower Driver Board Schematic (Sheet 1 of 5)

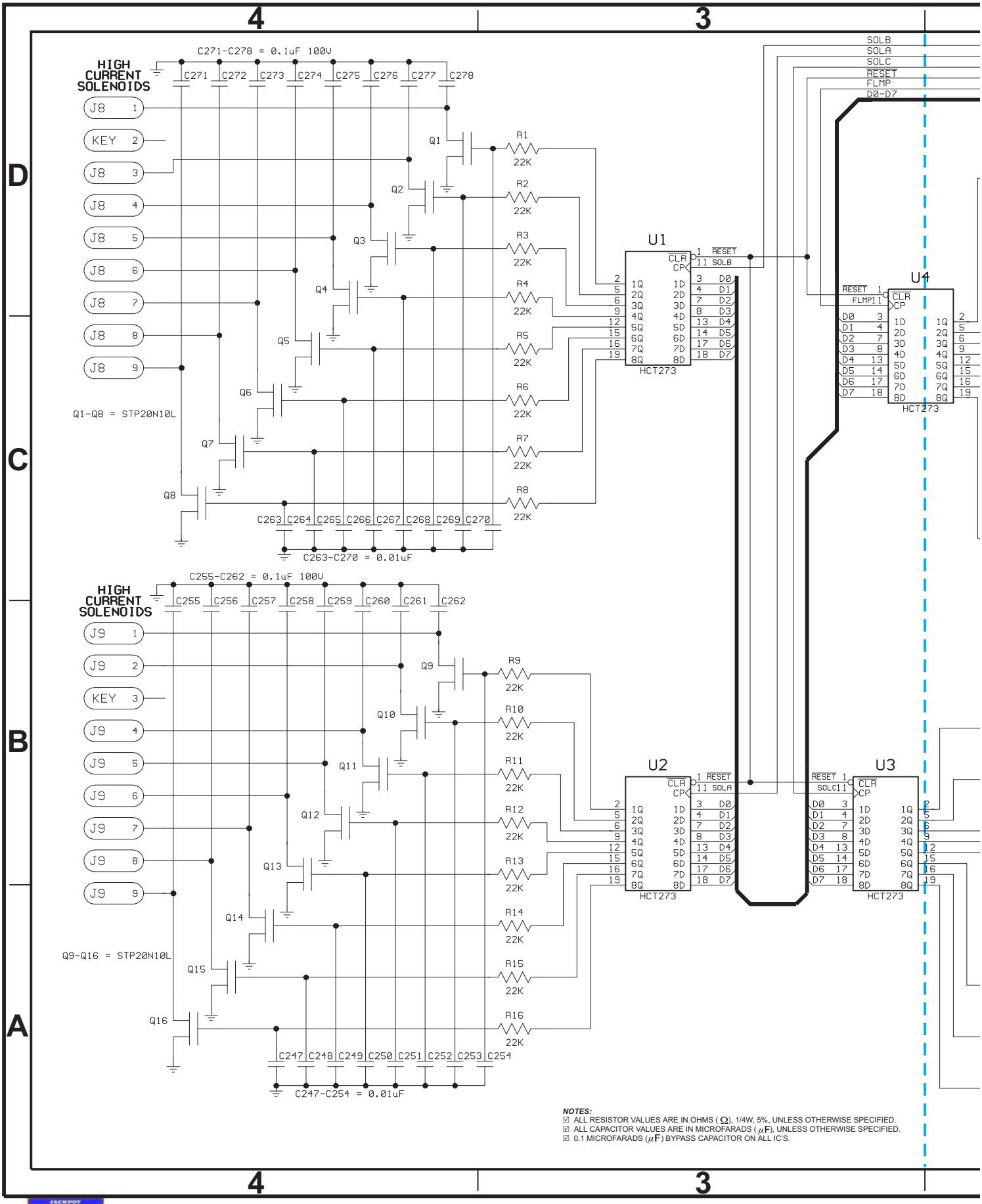

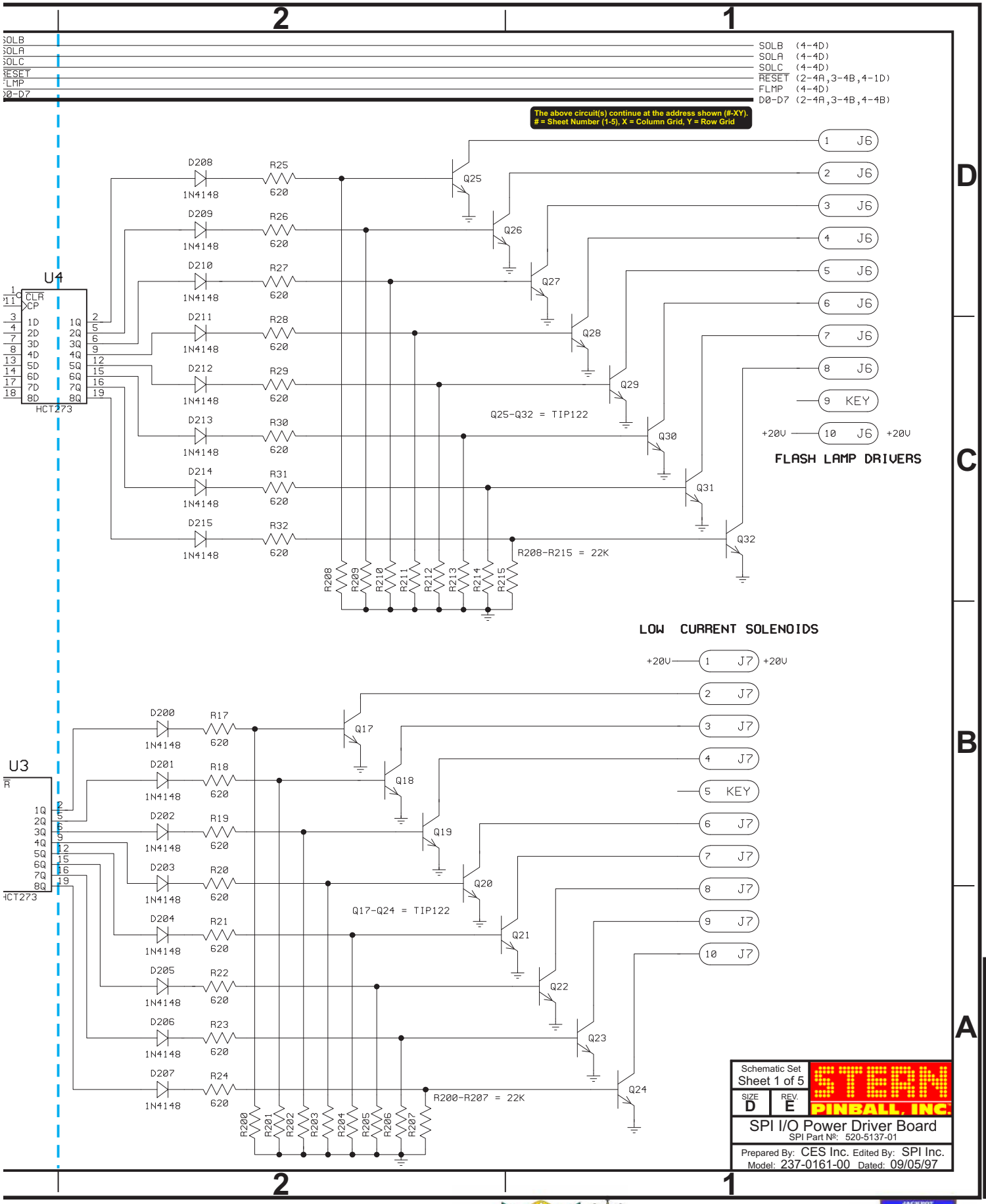
SOLB (4-4D)
SOLA (4-4D)
SOLC (4-4D)
RESET (2-4A,3-4B,4-1D)
FLMP (4-4D)
D0-D7 (2-4A,3-4B,4-4B)
The above circuit(s) continue at the address shown (#-XY).
= Sheet Number (1-5), X = Column Grid, Y = Row Grid
U4
HCT273
Q25-Q32 = TIP122
R208-R215 = 22K
FLASH LAMP DRIVERS
+20V
LOW CURRENT SOLENOIDS
U3
Q17-Q24 = TIP122
R200-R207 = 22K
Schematic Set
Sheet 1 of 5
SIZE D
REV. E
STERN PINBALL, INC.
SPI I/O Power Driver Board
SPI Part №: 520-5137-01
Prepared By: CES Inc. Edited By: SPI Inc.
Model: 237-0161-00 Dated: 09/05/97

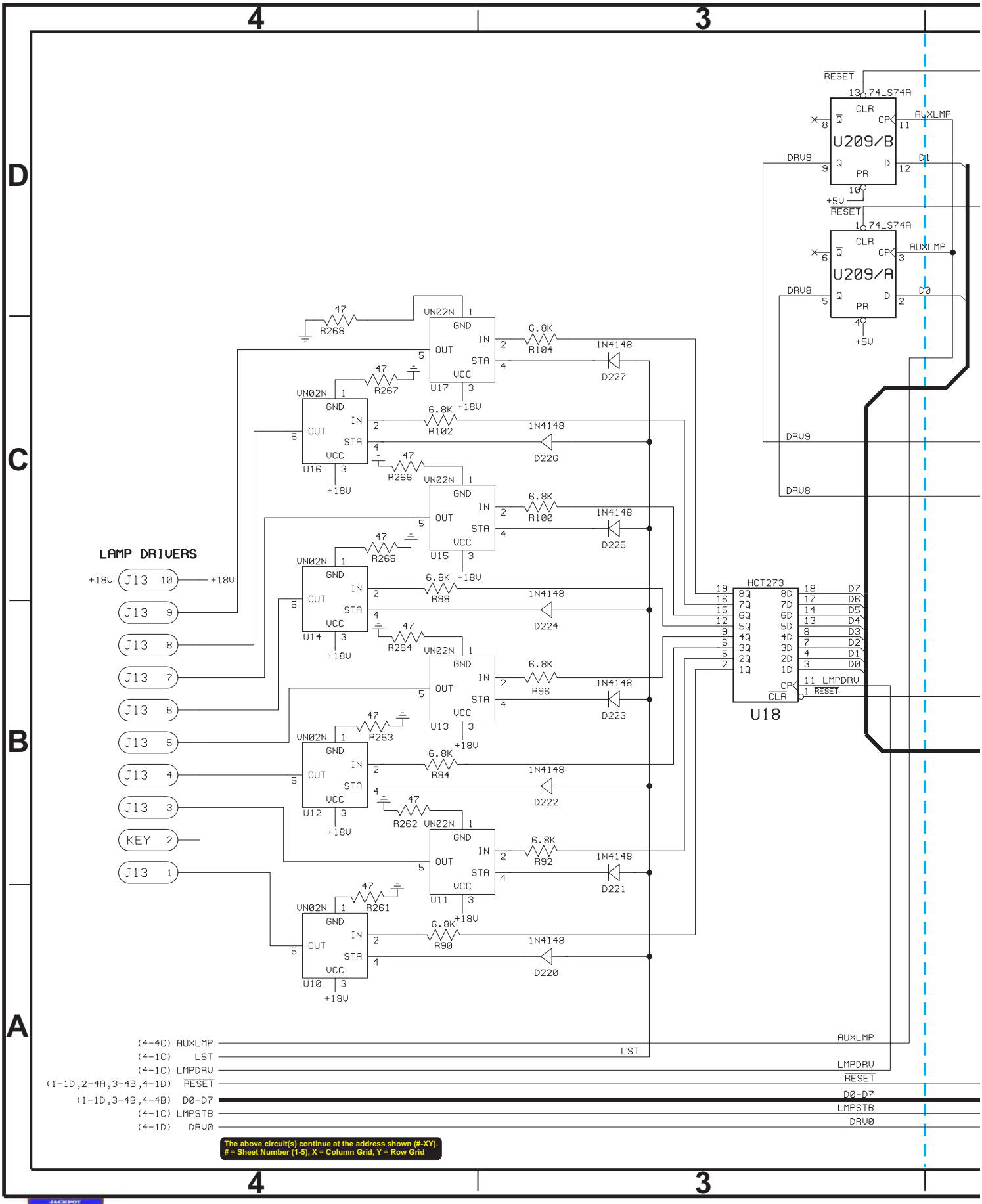
4
3
D
C
B
A
RESET
74LS74A
CLR
Q
CP
AUXLMP
U209/B
DRV9
D1
PR
+5V
U209/A
DRV8
D0
LAMP DRIVERS
+18V
J13 10
J13 9
J13 8
J13 7
J13 6
J13 5
J13 4
J13 3
KEY 2
J13 1
UN02N
GND
IN
OUT
STA
VCC
U17
U16
U15
U14
U13
U12
U11
U10
R268
R267
R266
R265
R264
R263
R262
R261
47
6.8K
R104
R102
R100
R98
R96
R94
R92
R90
1N4148
D227
D226
D225
D224
D223
D222
D221
D220
HCT273
U18
LMPDRV
(4-4C) AUXLMP
(4-1C) LST
(4-1C) LMPDRV
(1-1D,2-4A,3-4B,4-1D) RESET
(1-1D,3-4B,4-4B) D0-D7
(4-1C) LMPSTB
(4-1D) DRV0
The above circuit(s) continue at the address shown (#-XY).
= Sheet Number (1-5), X = Column Grid, Y = Row Grid

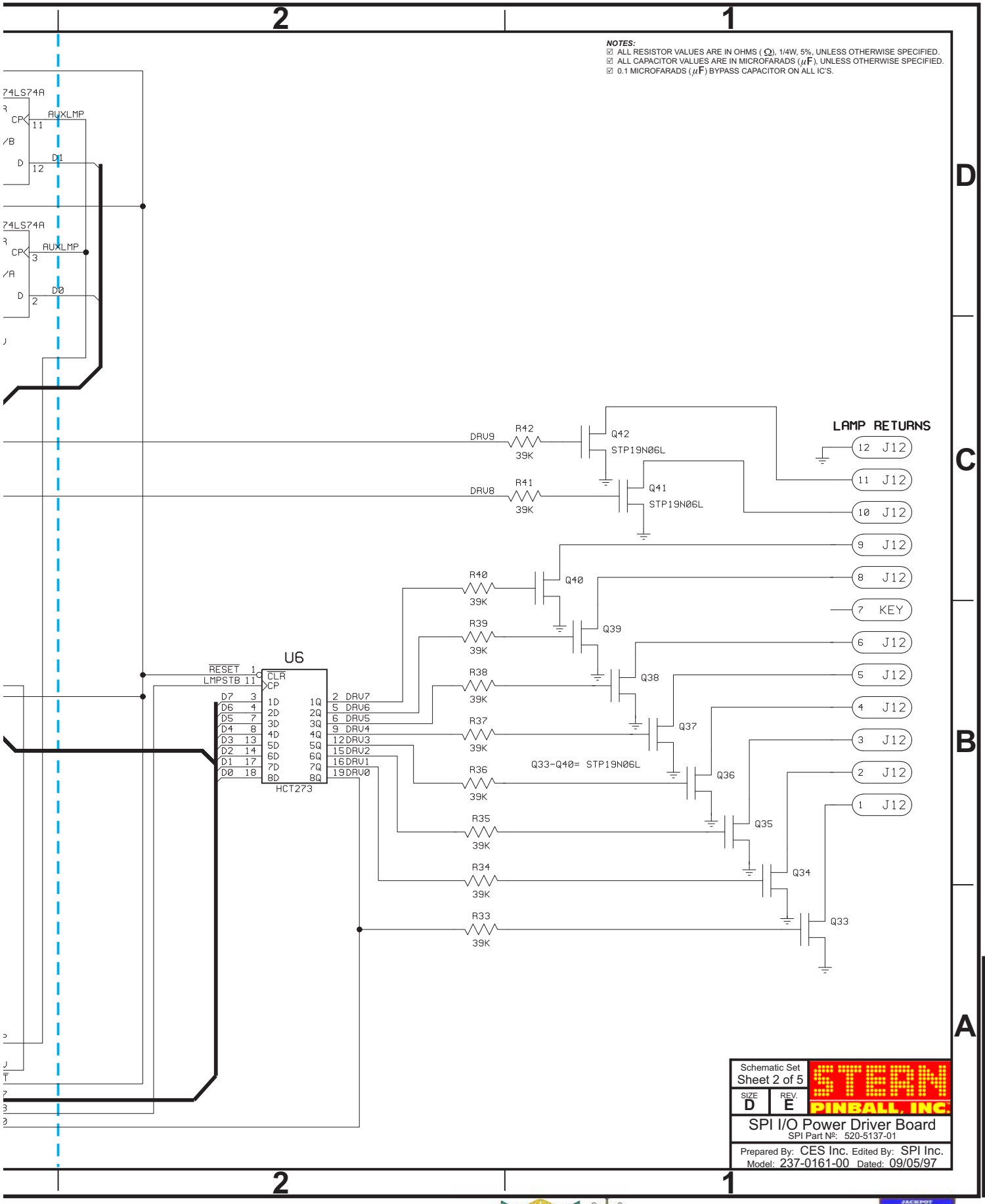
NOTES:
☑ ALL RESISTOR VALUES ARE IN OHMS (Ω), 1/4W, 5%, UNLESS OTHERWISE SPECIFIED.
☑ ALL CAPACITOR VALUES ARE IN MICROFARADS (μF), UNLESS OTHERWISE SPECIFIED.
☑ 0.1 MICROFARADS (μF) BYPASS CAPACITOR ON ALL IC'S.
74LS74A
AUXLMP
D1
D0
DRV9
DRV8
R42
R41
39K
Q42
Q41
STP19N06L
LAMP RETURNS
12 J12
11 J12
10 J12
9 J12
8 J12
7 KEY
6 J12
5 J12
4 J12
3 J12
2 J12
1 J12
R40
R39
R38
R37
R36
R35
R34
R33
Q40
Q39
Q38
Q37
Q36
Q35
Q34
Q33
Q33-Q40= STP19N06L
U6
RESET
LMPSTB
CLR
CP
HCT273
DRV7
DRV6
DRV5
DRV4
DRV3
DRV2
DRV1
DRV0
Schematic Set
Sheet 2 of 5
SIZE D
REV. E
STERN PINBALL, INC.
SPI I/O Power Driver Board
SPI Part №: 520-5137-01
Prepared By: CES Inc. Edited By: SPI Inc.
Model: 237-0161-00 Dated: 09/05/97

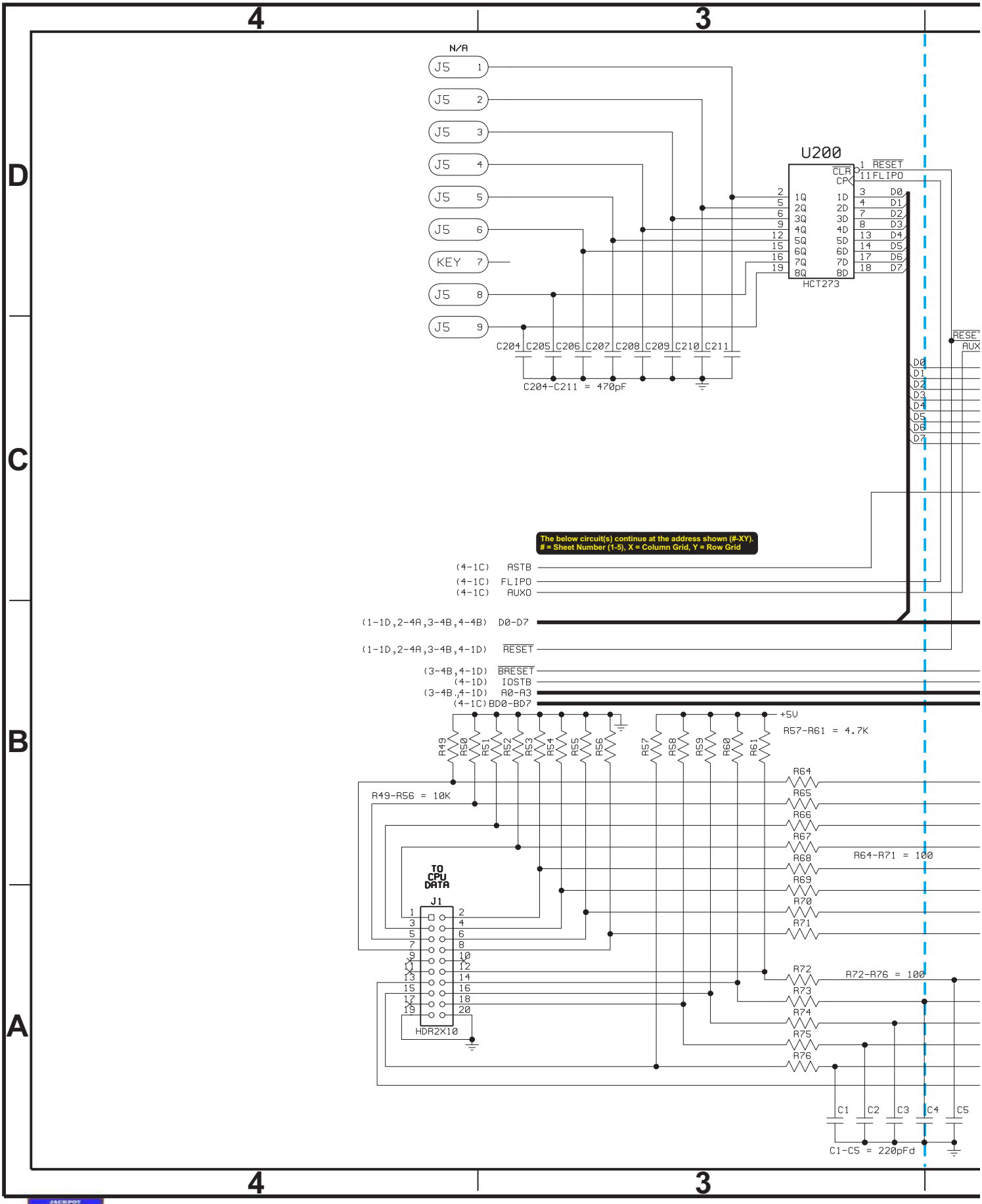
4
3
D
C
B
A
N/A
J5 1
J5 2
J5 3
J5 4
J5 5
J5 6
KEY 7
J5 8
J5 9
U200
HCT273
CLR
CP
1Q 2Q 3Q 4Q 5Q 6Q 7Q 8Q
1D 2D 3D 4D 5D 6D 7D 8D
RESET
FLIPO
D0 D1 D2 D3 D4 D5 D6 D7
C204 C205 C206 C207 C208 C209 C210 C211
C204-C211 = 470pF
RESET
AUX
The below circuit(s) continue at the address shown (#-XY).
= Sheet Number (1-5), X = Column Grid, Y = Row Grid
(4-1C) ASTB
(4-1C) FLIPO
(4-1C) AUXO
(1-1D,2-4A,3-4B,4-4B) D0-D7
(1-1D,2-4A,3-4B,4-1D) RESET
(3-4B,4-1D) BRESET
(4-1D) IOSTB
(3-4B,4-1D) A0-A3
(4-1C) BD0-BD7
+5V
R49 R50 R51 R52 R53 R54 R55 R56
R57 R58 R59 R60 R61
R57-R61 = 4.7K
R49-R56 = 10K
R64 R65 R66 R67 R68 R69 R70 R71
R64-R71 = 100
TO CPU DATA
J1
HDR2X10
R72 R73 R74 R75 R76
R72-R76 = 100
C1 C2 C3 C4 C5
C1-C5 = 220pFd

JACKPOT
STERN
PINBALL, INC.
112

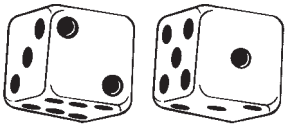

NOTES:
- ☑ ALL RESISTOR VALUES ARE IN OHMS (Ω), 1/4W, 5%, UNLESS OTHERWISE SPECIFIED.
- ☑ ALL CAPACITOR VALUES ARE IN MICROFARADS (μF), UNLESS OTHERWISE SPECIFIED.
- ☑ 0.1 MICROFARADS (μF) BYPASS CAPACITOR ON ALL IC'S.

DATE	DESCIRIPTION OF CHANGES / REVISIONS	REQ.	BY.
JAN 2001	Cut trace on solder side at Aux. Out Port J2-PIN1 thru J2-PIN3 & J2-PIN5 thru J2-PIN9; Soldered **Resistor 100Ω** 1/4W 5% (SPI Nº: 121-5007-00). This Modification (highlighted below at J2 with a dotted-line box) was accomplished on boards produced after Jan. 1, 2001. This board is backwards compatible for the White Star™ Board System.	TS	JET

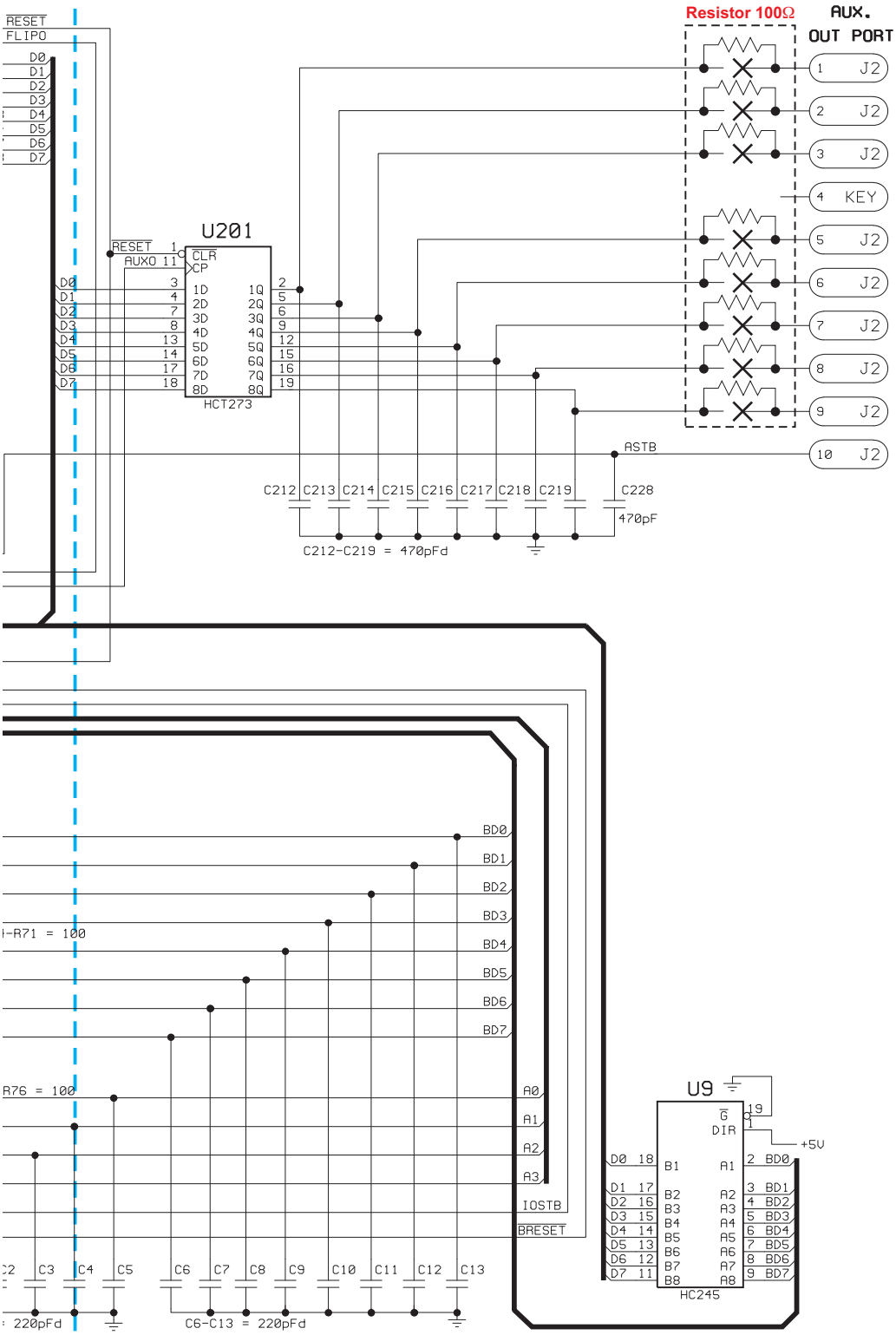

Schematic Set		
Sheet 3 of 5		STERN PINBALL, INC.
SIZE D	REV. E	

SPI I/O Power Driver Board
SPI Part Nº: 520-5137-01

Prepared By: CES Inc. Edited By: SPI Inc.
Model: 237-0161-00 Dated: 09/05/97

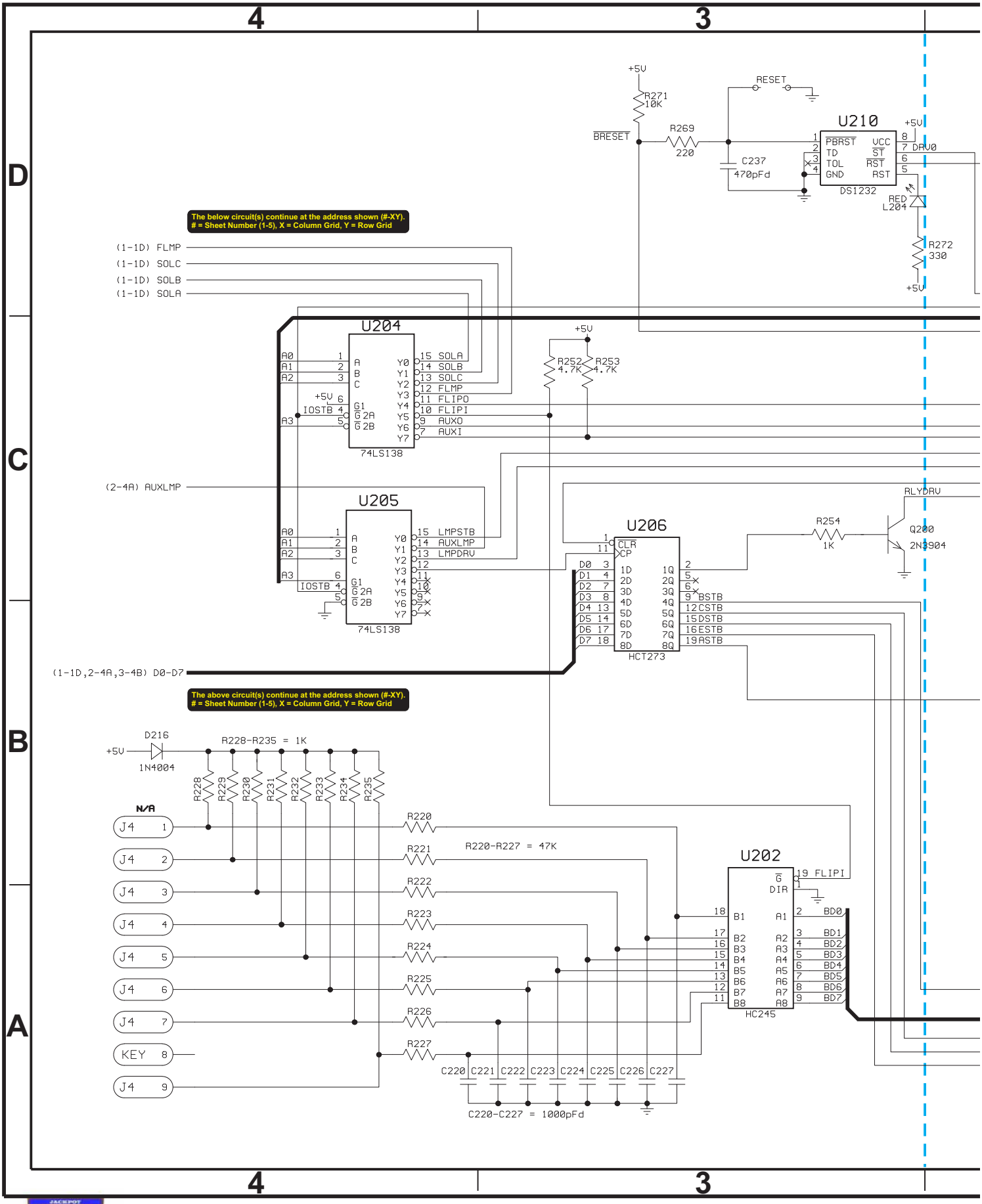
4
3
D
C
B
A
+5V
R271
10K
RESET
BRESET
R269
220
C237
470pFd
U210
PBRST
TD
TOL
GND
VCC
ST
RST
RST
DS1232
DRV0
RED
L204
R272
330
The below circuit(s) continue at the address shown (#-XY).
= Sheet Number (1-5), X = Column Grid, Y = Row Grid
(1-1D) FLMP
(1-1D) SOLC
(1-1D) SOLB
(1-1D) SOLA
U204
A0
A1
A2
A3
IOSTB
G1
G 2A
G 2B
Y0
Y1
Y2
Y3
Y4
Y5
Y6
Y7
SOLA
SOLB
SOLC
FLMP
FLIPO
FLIPI
AUXO
AUXI
74LS138
R252
4.7K
R253
4.7K
(2-4A) AUXLMP
U205
LMPSTB
AUXLMP
LMPDRV
74LS138
U206
CLR
CP
D0
D1
D2
D3
D4
D5
D6
D7
1D
2D
3D
4D
5D
6D
7D
8D
1Q
2Q
3Q
4Q
5Q
6Q
7Q
8Q
BSTB
CSTB
DSTB
ESTB
ASTB
HCT273
RLYDRV
R254
1K
Q200
2N3904
(1-1D,2-4A,3-4B) D0-D7
The above circuit(s) continue at the address shown (#-XY).
= Sheet Number (1-5), X = Column Grid, Y = Row Grid
D216
1N4004
R228-R235 = 1K
R228
R229
R230
R231
R232
R233
R234
R235
N/A
J4 1
J4 2
J4 3
J4 4
J4 5
J4 6
J4 7
KEY 8
J4 9
R220
R221
R222
R223
R224
R225
R226
R227
R220-R227 = 47K
U202
G
DIR
FLIPI
B1
B2
B3
B4
B5
B6
B7
B8
A1
A2
A3
A4
A5
A6
A7
A8
BD0
BD1
BD2
BD3
BD4
BD5
BD6
BD7
HC245
C220
C221
C222
C223
C224
C225
C226
C227
C220-C227 = 1000pFd

DATE	DESCIRIPTION OF CHANGES / REVISIONS	REQ.	BY.
02-13-95	DELETE "-12V" NET FROM POSITIVE PIN OF C29. ADD "GND" NET TO POSITIVE PIN OF C29. MERGE UNNAMED NET FROM NEGATIVE PIN OF C29 WITH "-12V" NET.	BK	JHS
05-25-99	CUT PIN-3 TO GND ON U210 (4-3D)		

NOTES:
- ☑ ALL RESISTOR VALUES ARE IN OHMS (Ω), 1/4W, 5%, UNLESS OTHERWISE SPECIFIED.
- ☑ ALL CAPACITOR VALUES ARE IN MICROFARADS (μF), UNLESS OTHERWISE SPECIFIED.
- ☑ 0.1 MICROFARADS (μF) BYPASS CAPACITOR ON ALL IC'S.

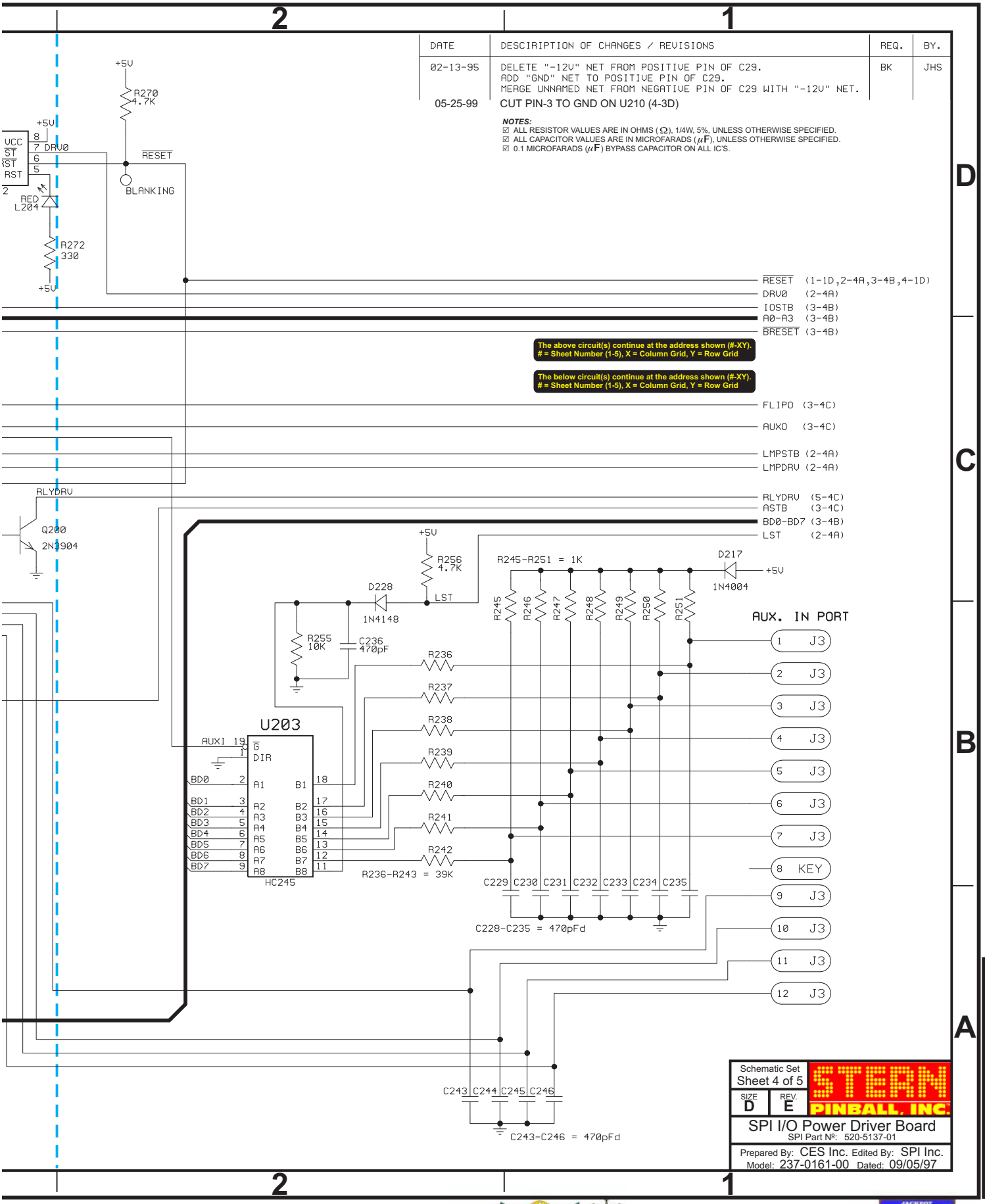

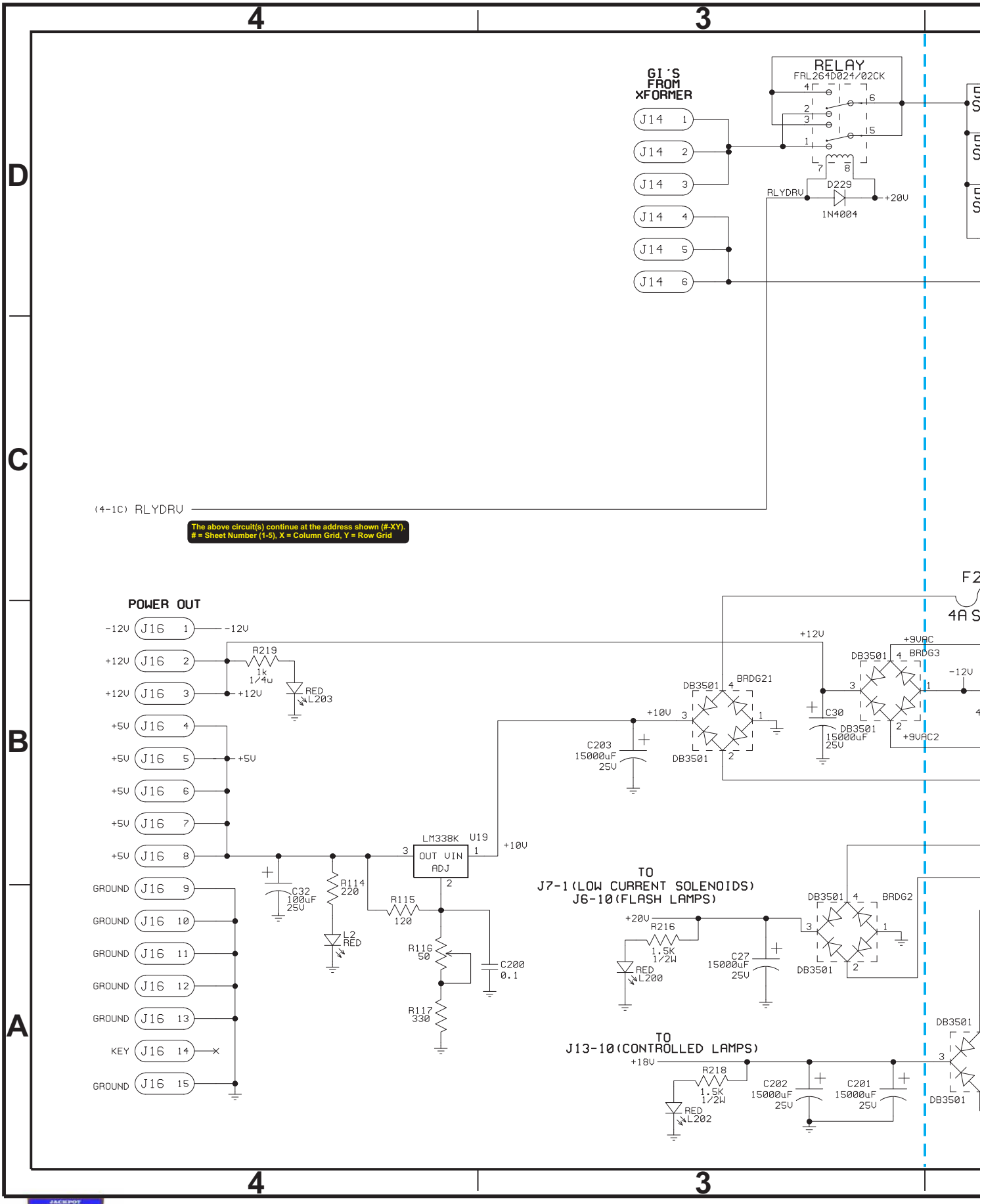
4
3
D
C
B
A
GI'S FROM XFORMER
J14 1
J14 2
J14 3
J14 4
J14 5
J14 6
RELAY
FRL264D024/02CK
RLYDRV
D229
1N4004
+20V
(4-1C) RLYDRV
The above circuit(s) continue at the address shown (#-XY).
= Sheet Number (1-5), X = Column Grid, Y = Row Grid
POWER OUT
-12V J16 1
+12V J16 2
+12V J16 3
+5V J16 4
+5V J16 5
+5V J16 6
+5V J16 7
+5V J16 8
GROUND J16 9
GROUND J16 10
GROUND J16 11
GROUND J16 12
GROUND J16 13
KEY J16 14
GROUND J16 15
R219
1k
1/4w
RED
L203
C32
100uF
25V
R114
220
L2
RED
LM338K U19
OUT VIN
ADJ
R115
120
R116
50
R117
330
C200
0.1
+10V
C203
15000uF
25V
DB3501
BRDG21
+12V
C30
15000uF
25V
+9VAC
BRDG3
+9VAC2
TO
J7-1(LOW CURRENT SOLENOIDS)
J6-10(FLASH LAMPS)
+20V
R216
1.5K
1/2W
RED
L200
C27
15000uF
25V
BRDG2
TO
J13-10(CONTROLLED LAMPS)
+18V
R218
1.5K
1/2W
RED
L202
C202
15000uF
25V
C201
15000uF
25V
F2
4A S

JACKPOT
STERN
PINBALL, INC.
116

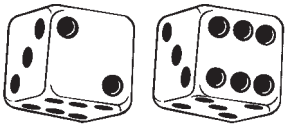

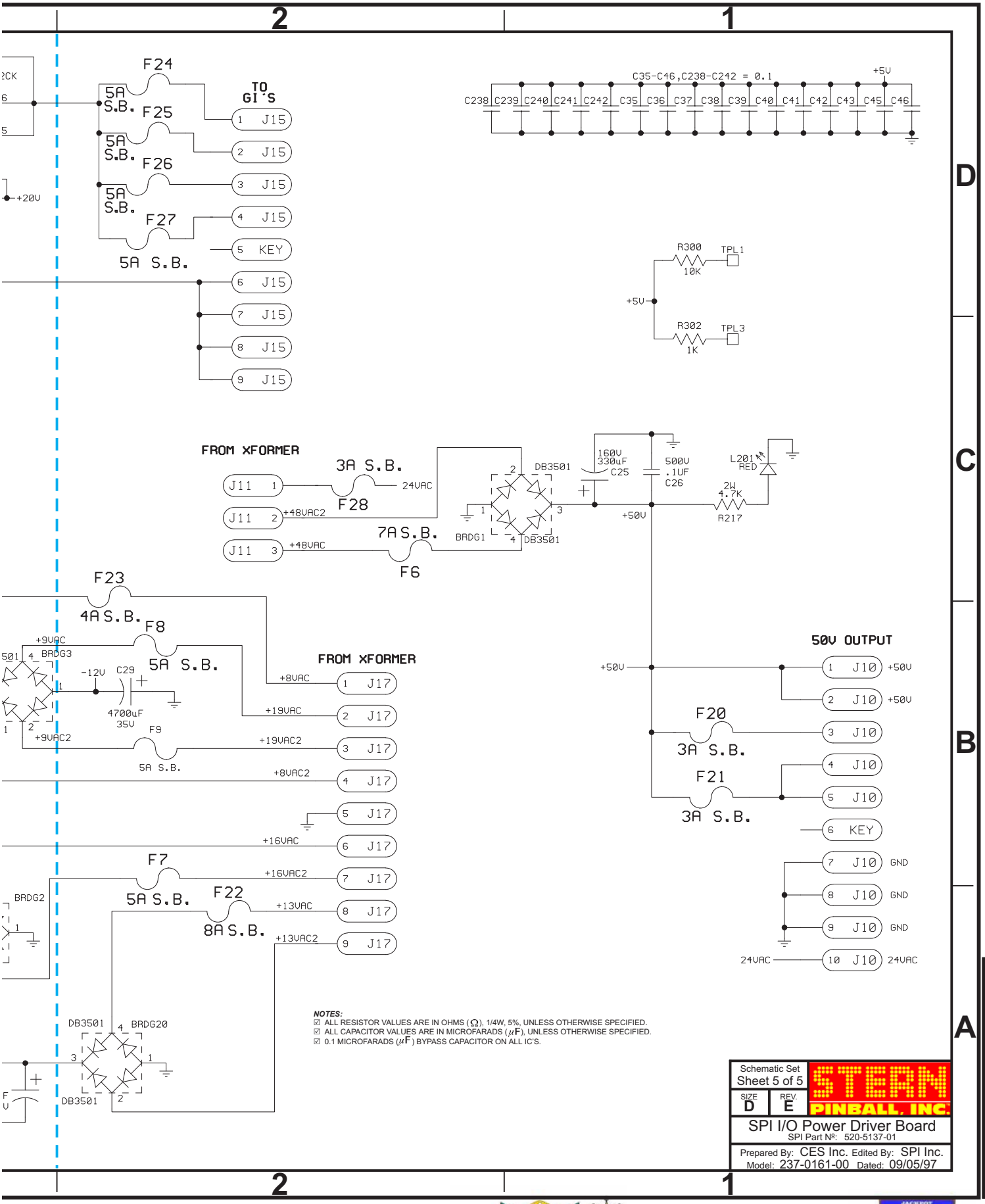
2
1
D
C
B
A
F24
5A S.B.
F25
5A S.B.
F26
5A S.B.
F27
5A S.B.
TO GI'S
J15
KEY
+20V
C35-C46,C238-C242 = 0.1
+5V
C238 C239 C240 C241 C242 C35 C36 C37 C38 C39 C40 C41 C42 C43 C45 C46
R300 10K TPL1
R302 1K TPL3
FROM XFORMER
J11
3A S.B.
F28
24VAC
+48VAC2
7A S.B.
F6
+48VAC
DB3501
BRDG1
160V 330uF C25
500V .1UF C26
+50V
L201 RED
2W 4.7K R217
F23
4A S.B.
F8
5A S.B.
+9VAC
BRDG3
-12V
C29
4700uF 35V
+9VAC2
F9
5A S.B.
FROM XFORMER
+8VAC
+19VAC
+19VAC2
+8VAC2
+16VAC
+16VAC2
+13VAC
+13VAC2
J17
F7
5A S.B.
F22
8A S.B.
BRDG2
DB3501
BRDG20
50V OUTPUT
J10
+50V
F20
3A S.B.
F21
3A S.B.
GND
24VAC
NOTES:
ALL RESISTOR VALUES ARE IN OHMS (Ω), 1/4W, 5%, UNLESS OTHERWISE SPECIFIED.
ALL CAPACITOR VALUES ARE IN MICROFARADS (μF), UNLESS OTHERWISE SPECIFIED.
0.1 MICROFARADS (μF) BYPASS CAPACITOR ON ALL IC'S.
Schematic Set
Sheet 5 of 5
SIZE D
REV. E
STERN PINBALL, INC.
SPI I/O Power Driver Board
SPI Part №: 520-5137-01
Prepared By: CES Inc. Edited By: SPI Inc.
Model: 237-0161-00 Dated: 09/05/97

I/O Power Driver Board Component Layout

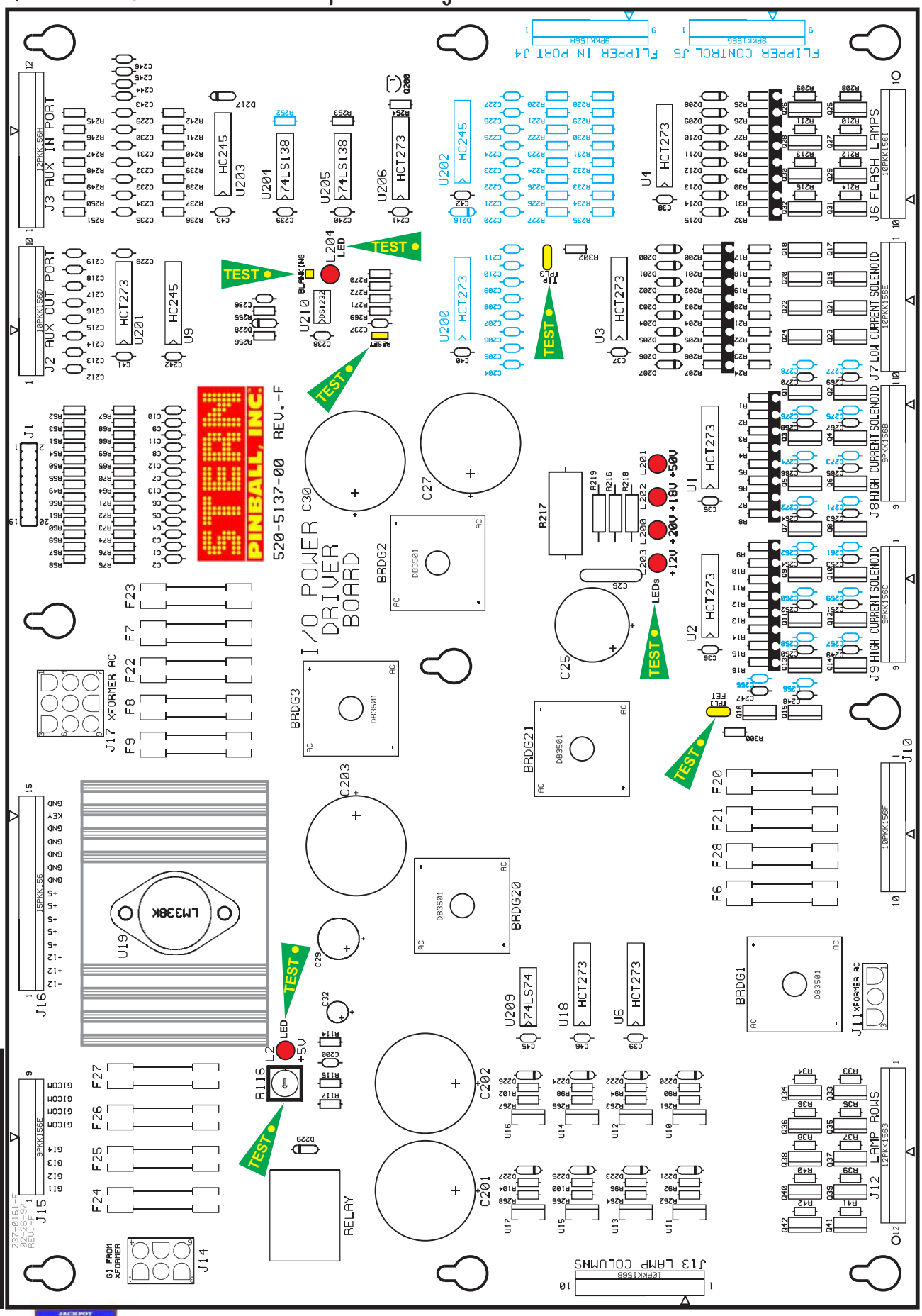

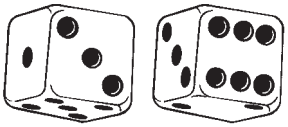

I/O Power Driver Board Parts

ITEM	QTY	PART NUMBER	REF-DESIGNATOR	DESCRIPTION (NS = Not Stuffed)
—	**1**	**520-5137-01**	**I/O Power Driver Board**	**Complete PCB Assembly**
01	5	112-5000-00	BRDG1, BRDG2, BRDG3, BRDG20, BRDG21	DB3501
02	13	125-5030-00	C1, C2, C3>C6, C7, C8, C9>C10, C11, C12	220pF, (221), Cap.
03	1	125-5033-00	C25	100uF, 150v, Radial Lytic Cap.
04	1	125-5035-00	C26	.1UF, 500v, Ceramic Disk Cap.
05	5	125-5036-00	C27, C30, C201, C202, C203	15000uF, 25v, Radial Lytic Cap.
06	1	125-5034-00	C29	4700uF, 35v, Radial Lytic Cap.
07	1	125-5032-00	C32	100uF, 25v, Radial Lytic Cap.
08	17	125-5031-00	C35, C36, C37, C38, C39, C40, C41, C42, C43, C45, C46, C200, C238, C239, C240, C241, C242	0.1uF, (104), Cap.
09	22	125-5028-00	C212>C219, C228>C237, C243>C246 (C204-C211: NS)	470pF, (471), Axial Cap.
10	0	n/a	(C220>C227: NS)	
11	16	125-5029-00	C247>C254, C263>C270	0.01uF, (103), 100v Cap.
12	0	125-5027-00	(C255>C262, C271>C278: NS)	0.1uF, (104), 100v, Cap.
13	25	112-0054-00	D200>D207, D208>D215, D220, D221, D222, D223, D224, D225, D226, D227	1N4148, Diode
14	2	112-5003-00	D217, D229 (D216: NS)	1N4004, Diode
15	26	205-0004-00	F6, F7, F8, F9, F20, F21, F22, F23, F24> F27, F28	Fuse Clips
16	1	200-5000-03	F6	7A 250v S.B. Fuse
17	7	200-5000-01	F7, F8, F9, F24>F27	5A 250v S.B. Fuse
18	3	200-5000-08	F20, F21, F28	3A 250v S.B. Fuse
19	1	200-5000-05	F22	8A 250v S.B. Fuse
20	1	200-5000-06	F23	4A 250v S.B. Fuse
21	1	045-5015-01	J1	20-Pin, 0.1 Dual Row Header
22	1	045-5014-01	J2 (Key Pin-4), J6 (Key Pin-9), J7 (Key Pin-5) J10 (Key Pin-6), J13 (Key Pin-2)	10PKK156
23	1	045-5015-00	J3 (Key Pin-8)	12PKK156
	0	n/a	(J4, J5: NS)	
24	1	045-5013-00	J8 (Key Pin-2), J9 (Key Pin-3), J15 (Key Pin-5)	9PKK156
25	1	045-0014-03	J11	10-84-4030 (3-Pin MOLEX)
26	1	045-5015-00	J12 (Key Pin-7)	12PKK156
27	1	045-0014-06	J14	10-84-4060 (6-Pin MOLEX)
28	1	045-5016-00	J16 (Key Pin-14)	15PKK156
29	1	045-0014-09	J17	10-84-4090 (9-Pin MOLEX)
30	**6**	**165-5099-00**	**L2, L200, L201, L202, L203, L204**	**LED T1-3/4 DIFFUSER LED**
31	16	110-0106-00	Q1>Q16	20N10L STP, Transistor
32	16	110-0067-00	Q17>Q24, Q25>Q32	TIP122
33	10	110-0088-00	Q33>Q42	19N06L STP, Transistor
34	1	110-0069-00	Q200	2N3904, Transistor.
35	32	121-5042-00	R1>R8, R9>R16, R200>R207, R208>R215	22K Ω 1/4W Res.
36	16	121-5003-00	R17>R24, R25>R32	620 Ω 1/4W Res.
37	17	121-5045-00	R33>R42, R236>R242	39K Ω 1/4W Res.
38	8	121-5021-00	R49, R57>R61, R253, R256, R270 (R252: NS)	4.7K Ω 1/4W Res.
39	11	121-5011-00	R50>R56, R255, R271, R300	10K Ω 1/4W Res.
40	13	121-5007-00	R64>R76 Resistors on Solder Side @ J2-Pins: 1-3 & 5-9	100 Ω 1/4W Res.
41	8	121-5029-00	R90, R92, R94, R96, R98, R100, R102, R104	6.8K Ω 1/4W Res.
42	2	121-5033-00	R114, R269	220 Ω 1/4W Res.
43	1	121-5030-00	R115	120 Ω 1/4W Res.
44	1	121-5039-00	R116	50 Ω Pot
45	2	121-5036-00	R117, R272	330 Ω 1/4W Res.
46	2	121-5038-00	R216, R218	1.5K Ω 1/2W Res.
47	1	121-5050-00	R217	4.7K Ω 2W Res. (SANDBAR)
48	1	121-5009-00	R219	1K Ω 1/4W Res.
49	0	n/a	(R220>R227: NS)	
50	9	121-5009-00	R245>R251, R254, R302 (R228>R235: NS)	1K Ω 1/4W Res.
51	8	121-5032-00	R261, R262, R263, R264, R265, R266, R267, R268	47 Ω 1/4W Res.
52	1	190-5002-00	RELAY	FRL264D024/02CK Relay
53	2	n/a	TPL1, TPL3	*Test Point Wire (24ga.) Loops*
54	8	100-5012-00	U1, U2, U3, U4, U6, U18, U201, U206 (U200: NS)	74HCT273
55	1	110-0058-00	U9	74LS245
56	1	100-5023-00	U210	DS1232
57	8	110-0089-00	U10, U11, U12, U13, U14, U15, U16, U17	VN02N
58	1	100-0356-00	U19	LM338K
59	1	n/a	U19	Heatsink (5v Reg.)
60	1	100-0338-00	U203 (U202: NS)	74HC245
61	2	100-0148-00	U204, U205	74LS138
62	1	100-0037-00	U209	74LS74
63	1	n/a	BLANKING, RESET	*Test Points*

Your Notes

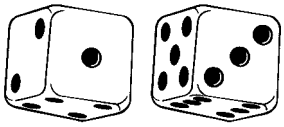

CPU Section:

The CPU is a **68B09E** (**U209**) with up to 8 MBytes of CPU *Code Space* (**U210**). The CPU code is bank selected by the use of **U211** and each bank consists of 16 KBytes. 8 KBytes of **RAM** (**U212**) is available to the CPU. The RAM is battery backed and has a write protected area. Battery back up is accomplished by **3-AA Cells** (**BAT1**) which have a **TEST POINT VBATT** to check the battery voltage status. The write protected area consists of 512 Bytes used for storing game settings. This section of **RAM** can only be written to when the coin door is open. The Coin Door switch comes into the CPU on **CN6-12** and is fed into the address decoding **PAL U213**. When this memory protect signal is low writes to the protected **RAM** area are prohibited. Address decoding for the system is accomplished by one **PAL U213** and one 1-of-8 decoder **U214**.

A watchdog is used to monitor the CPU and the 5v supply. If the 5v supply is below 4.75 the watchdog will hold the CPU/Sound Board & I/O Board in *reset*. The watchdog must be fed at a rate of ***250ms*** or faster. The signal used to feed the watchdog comes from the EPROM Bank select signal used to load **U211**. The CPU has a timer interrupt used as a heartbeat for the system this signal comes from counter **U2**. The clock for this counter is the **CPU Q CLOCK**. Clearing the timer interrupt is done by reading the ***DIP Switch***. The timer interrupt can be observed at **TEST POINT FIRQ**. In normal operation **"FIRQ"** should be toggling at a rate of *976Hz*.

The I/O Interface **CN1** is buffered by two (2) **HC245** Chips. The CPU's reset line is buffered by **Q10** and fed over to the I/O through **CN1**. An I*/O Strobe Signal* is feed through **CN1-15** and is used to notify the I/O that a valid address is being sent.

Switches:

The Switch Matrix consists of eight (8) **2N3904** Transistors which pull one of 8 strobes 'low' to *activate* a Single Column of switches. The *Switch Return Signals* are fed into **CN7** [SWITCH ROWS] and are highly filtered and compared to a 2.5v *reference voltage*. The *Switch Return Voltage* must be below 2.5v to make a *Valid Switch Closure*. If *false switches* are appearing, check that none of the **2N3904** Transistors are permanently pulling the *strobe line low*. Only one strobe from **CN5** [SWITCH COLUMNS] should be *low at any time*. **CN6** [DEDICATED SWITCH IN] is a *Dedicated Bank of Input Switches*. Switches connected to **CN6** are connected to ground instead of a strobe and may be read at any time.

Plasma Interface:

The data path for communication to and from the Plasma Controller Board is 8 bits wide. There are separate *Input* and *Output Busses*. The *Input Bus* from the Plasma Controller to the CPU/Sound Board comes in on **CN8** [PLASMA CONTROL]-**Pins 3-10** and is fed into **U200** for input to the CPU's *Data Bus*. Data going out to the controller comes from the CPU's *Data Bus* through **U201** and onto **CN8-Pins 11-18**. Status back from the Plasma Controller comes in on **CN8-Pins 22-26** and is fed into **U202** for input to the CPU's *Data Bus*. Two control signals that go out to the Plasma Controller are **PRES** [PLASMA RESET] and **CN8-Pin 19** [**PSTB** - *Plasma Strobe*]. The Plasma Reset is software controllable through **U216**/**B** and also has a test point "Plasma Reset". The *Plasma Strobe Signal* to the controller is generated from **U216**/**A** and is *used to latch data* into the Plasma Controller.

Sound Section:

The audio section consists of a **BSMT SOUND CHIP U9** Sound (Voice) EPROMs (**U17 U21 U36 U37**) **68B09E U6** and Sound Code **EPROM U7**. The **BSMT** latches sound EPROM addresses in **U13** & **U12** for output to the Sound EPROMs. Sound Data from the EPROMs is read through **U19** to the **BSMT**. The EPROMs are bank selected by **U22**. When the **BSMT** has sound data to be played out to the speakers it loads 16 bits into a 16 bit shift register made up of **U24** & **U23**. The data stream from the shift register is serially shifted into a stereo 16 bit *Digital to Analog Converter* (**DAC**). When the system is operating properly the ws (word select) input of the **DAC** will be toggling. The ws input is used to latch the right and left channel sound data into the **DAC**. If the ws line is not oscillating no analog signal will come out of the **DAC**. The **DAC** outputs are a controlled current source. These outputs are converted to a voltage by an operational amplifier **U30** to form the analog signal. **TEST POINTS AOR** and **AOL** are the outputs of the operational amplifier. These outputs are then fed directly into three power amplifiers (**TDA2030A**) or optionally into an analog volume control chip **U35** for a potentiometer volume control. The analog section has its own +5v & -5v derived from **VR1** & **VR2**. These separate supply voltages are for the **DAC U26** Operational Amplifier **U30** and analog volume control **U35**.

Sound calls are made from the **CPU's 68B09E U200** to the sound section by latching data into **U5**. The sound section's **CPU 68BO9E (U6)** reads in this data and handles the interfacing to the **BSMT**.

Other Test Points:

E & **Q** - The CPU signals for both **68B09E** processors. Should be at 2Mhz with **Q** leading **E** by ***500 nsec***.
24Mhz - The oscillator used for the **BSMT** & derivation of **E** & **Q**.
SND-FIRQ - The sound sections **CPU Interupt**.
6Mhz - This clock is generated internally on the **BSMT** and is used for shifting the data samples into th **DAC**.

W6 Jumper - This jumper must be installed for games that use **8MB** Sound EPROMs (**U17 U21 U36 U37**). For games which use **4MB** Sound EPROMs this jumper is not installed but will operate on boards with **W6** installed.

CPU/Sound Board Schematic (Sheet 1 of 3)

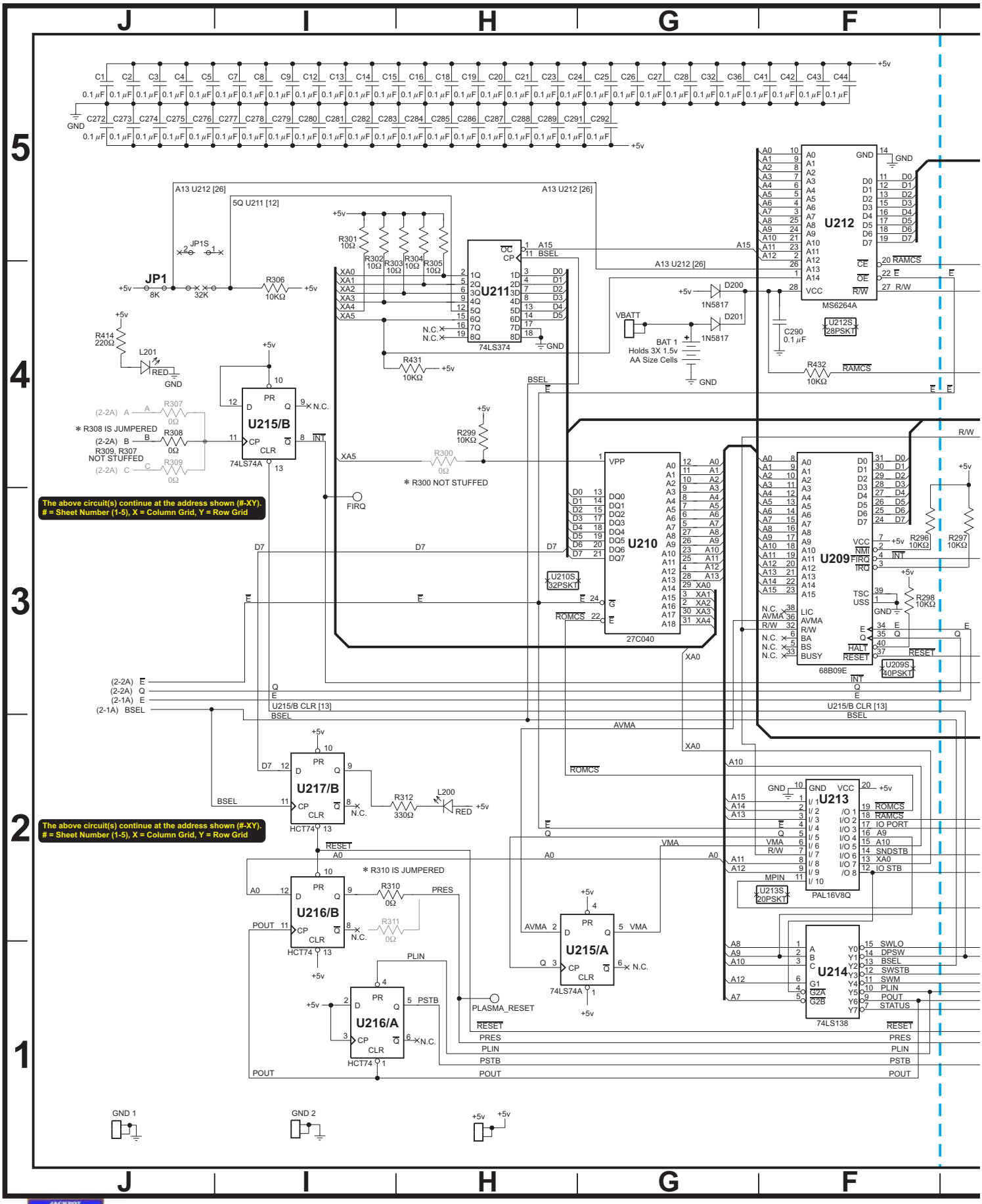

The above circuit(s) continue at the address shown (#-XY).
= Sheet Number (1-5), X = Column Grid, Y = Row Grid

The above circuit(s) continue at the address shown (#-XY).
= Sheet Number (1-5), X = Column Grid, Y = Row Grid

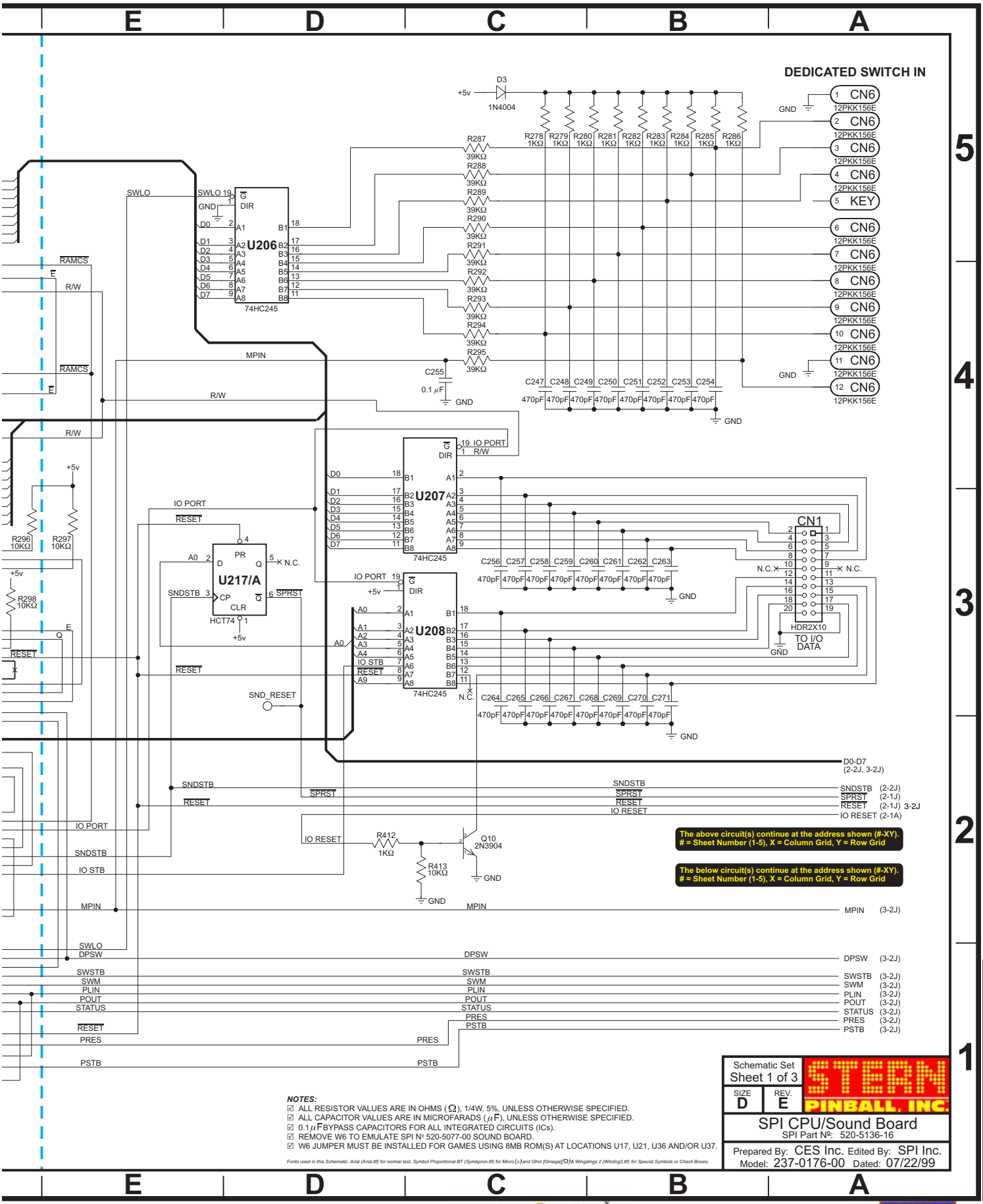

NOTES:

- ☑ ALL RESISTOR VALUES ARE IN OHMS (Ω), 1/4W, 5%, UNLESS OTHERWISE SPECIFIED.
- ☑ ALL CAPACITOR VALUES ARE IN MICROFARADS (μF), UNLESS OTHERWISE SPECIFIED.
- ☑ 0.1μF BYPASS CAPACITORS FOR ALL INTEGRATED CIRCUITS (ICs).
- ☑ REMOVE W6 TO EMULATE SPI Nº 520-5077-00 SOUND BOARD.
- ☑ W6 JUMPER MUST BE INSTALLED FOR GAMES USING 8MB ROM(S) AT LOCATIONS U17, U21, U36 AND/OR U37.

Fonts used in this Schematic: Arial (Arial.ttf) for normal text, Symbol Proportional BT (Symbprop.ttf) for Micro (μ) and Ohm (Omega) (Ω) & Wingdings 2 (Wndng2.ttf) for Special Symbols or Check Boxes.

Schematic Set Sheet 1 of 3	STERN PINBALL, INC.
SIZE D / REV. E	
SPI CPU/Sound Board SPI Part Nº: 520-5136-16	
Prepared By: CES Inc. Edited By: SPI Inc. Model: 237-0176-00 Dated: 07/22/99	

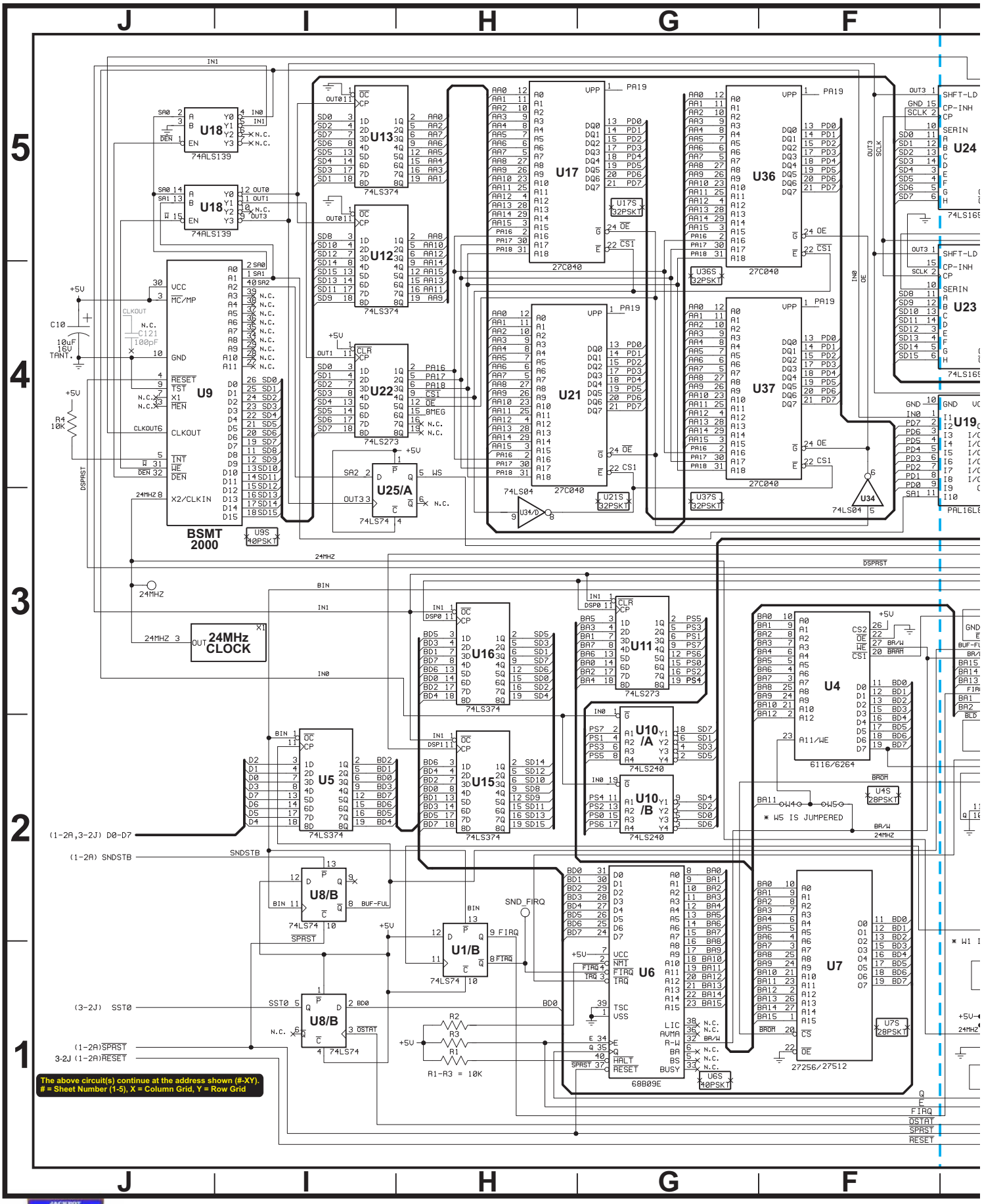
J
I
H
G
F
5
4
3
2
1
U18
74ALS139
U13
74LS374
U12
74LS374
U22
74LS273
U9
BSMT 2000
U17
27C040
U36
27C040
U21
27C040
U37
27C040
U24
74LS165
U23
74LS165
U19
PAL16L8
U25/A
74LS74
U34
74LS04
24MHZ CLOCK
U16
74LS374
U11
74LS273
U15
74LS374
U10 /A
74LS240
U10 /B
74LS240
U4
6116/6264
U5
74LS374
U8/B
74LS74
U1/B
74LS74
U6
68B09E
U7
27256/27512
* W5 IS JUMPERED
* W1 I
(1-2A,3-2J) D0-D7
(1-2A) SNDSTB
(3-2J) SST0
(1-2A)SPRST
3-2J (1-2A)RESET
R1-R3 = 10K
The above circuit(s) continue at the address shown (#-XY).
= Sheet Number (1-5), X = Column Grid, Y = Row Grid

JACKPOT
STERN
PINBALL, INC.
124

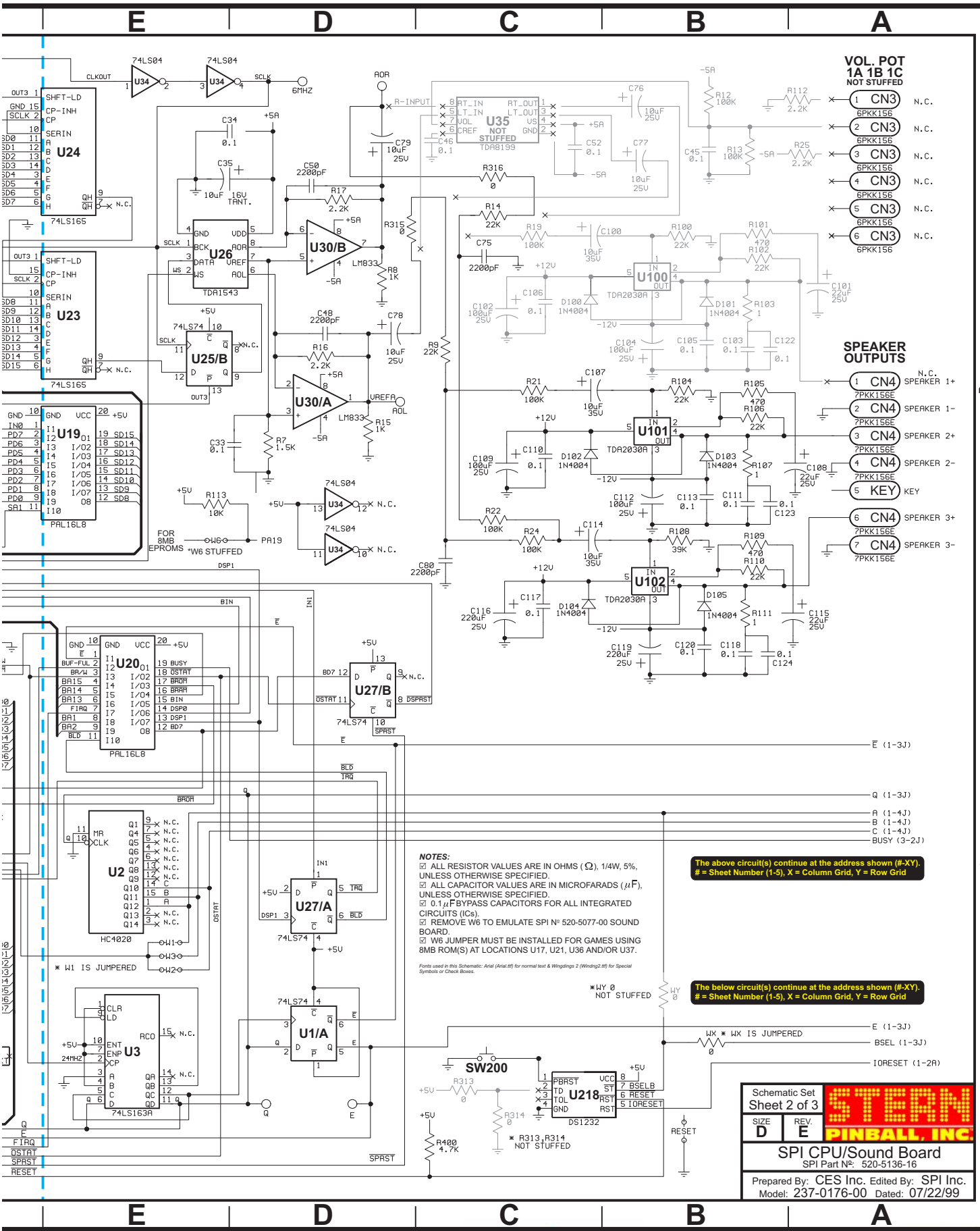
VOL. POT
1A 1B 1C
NOT STUFFED
SPEAKER OUTPUTS
U24
74LS165
U23
74LS165
U19
PAL16L8
U20
PAL16L8
U2
HC4020
U3
74LS163A
U26
TDA1543
U30/B
U30/A
U25/B
U35
NOT STUFFED
TDA8199
U100
U101
U102
TDA2030A
U27/B
U27/A
U1/A
U218
DS1232
SW200
FOR 8MB EPROMS
*W6 STUFFED
* W1 IS JUMPERED
*WY 0 NOT STUFFED
WX * WX IS JUMPERED
* R313,R314 NOT STUFFED
NOTES:
☑ ALL RESISTOR VALUES ARE IN OHMS (Ω), 1/4W, 5%, UNLESS OTHERWISE SPECIFIED.
☑ ALL CAPACITOR VALUES ARE IN MICROFARADS (μF), UNLESS OTHERWISE SPECIFIED.
☑ 0.1μF BYPASS CAPACITORS FOR ALL INTEGRATED CIRCUITS (ICs).
☑ REMOVE W6 TO EMULATE SPI Nº 520-5077-00 SOUND BOARD.
☑ W6 JUMPER MUST BE INSTALLED FOR GAMES USING 8MB ROM(S) AT LOCATIONS U17, U21, U36 AND/OR U37.
Fonts used in this Schematic: Arial (Arial.ttf) for normal text & Wingdings 2 (Winding2.ttf) for Special Symbols or Check Boxes.
The above circuit(s) continue at the address shown (#-XY).
= Sheet Number (1-5), X = Column Grid, Y = Row Grid
The below circuit(s) continue at the address shown (#-XY).
= Sheet Number (1-5), X = Column Grid, Y = Row Grid
Schematic Set
Sheet 2 of 3
SIZE D
REV. E
STERN PINBALL, INC.
SPI CPU/Sound Board
SPI Part Nº: 520-5136-16
Prepared By: CES Inc. Edited By: SPI Inc.
Model: 237-0176-00 Dated: 07/22/99

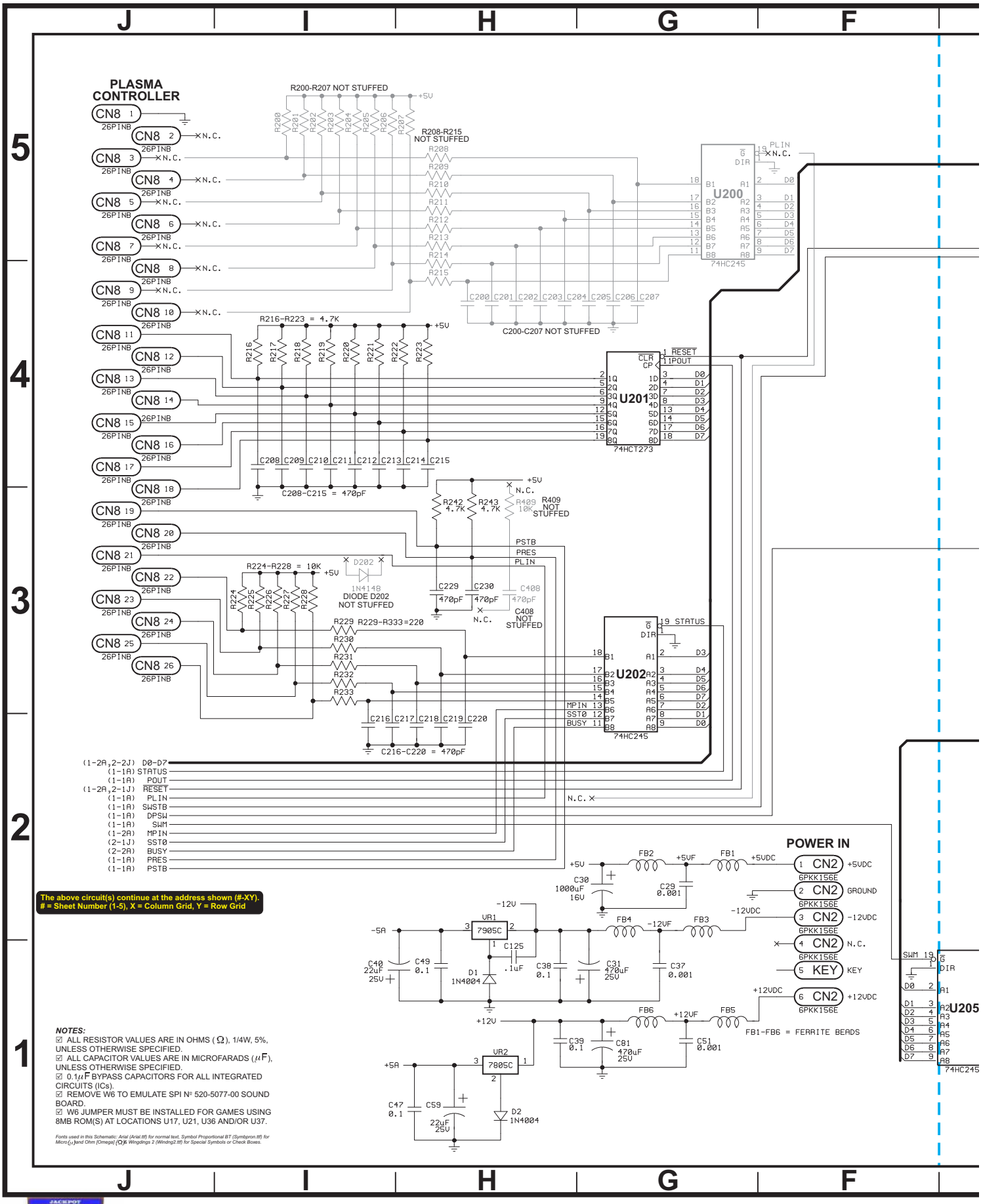
PLASMA CONTROLLER
CN8 1 26PINB
CN8 2 26PINB
CN8 3 26PINB
CN8 4 26PINB
CN8 5 26PINB
CN8 6 26PINB
CN8 7 26PINB
CN8 8 26PINB
CN8 9 26PINB
CN8 10 26PINB
CN8 11 26PINB
CN8 12 26PINB
CN8 13 26PINB
CN8 14 26PINB
CN8 15 26PINB
CN8 16 26PINB
CN8 17 26PINB
CN8 18 26PINB
CN8 19 26PINB
CN8 20 26PINB
CN8 21 26PINB
CN8 22 26PINB
CN8 23 26PINB
CN8 24 26PINB
CN8 25 26PINB
CN8 26 26PINB
N.C.
R200-R207 NOT STUFFED
R208-R215 NOT STUFFED
C200-C207 NOT STUFFED
U200
74HC245
PLIN
R216-R223 = 4.7K
U201
74HCT273
RESET
POUT
C208-C215 = 470pF
R242 4.7K
R243 4.7K
R409 10K NOT STUFFED
PSTB
PRES
PLIN
R224-R228 = 10K
D202
1N4148
DIODE D202 NOT STUFFED
C229 470pF
C230 470pF
C408 470pF
C408 NOT STUFFED
R229-R333=220
U202
74HC245
STATUS
MPIN
SST0
BUSY
C216-C220 = 470pF
(1-2A,2-2J) D0-D7
(1-1A) STATUS
(1-1A) POUT
(1-2A,2-1J) RESET
(1-1A) PLIN
(1-1A) SWSTB
(1-1A) DPSW
(1-1A) SWM
(1-2A) MPIN
(2-1J) SST0
(2-2A) BUSY
(1-1A) PRES
(1-1A) PSTB
The above circuit(s) continue at the address shown (#-XY).
= Sheet Number (1-5), X = Column Grid, Y = Row Grid
POWER IN
CN2 6PKK156E
+5VDC
GROUND
-12VDC
N.C.
KEY
+12VDC
FB1-FB6 = FERRITE BEADS
VR1 7905C
VR2 7805C
U205
74HC245
NOTES:
☑ ALL RESISTOR VALUES ARE IN OHMS (Ω), 1/4W, 5%, UNLESS OTHERWISE SPECIFIED.
☑ ALL CAPACITOR VALUES ARE IN MICROFARADS (μF), UNLESS OTHERWISE SPECIFIED.
☑ 0.1μF BYPASS CAPACITORS FOR ALL INTEGRATED CIRCUITS (ICs).
☑ REMOVE W6 TO EMULATE SPI № 520-5077-00 SOUND BOARD.
☑ W6 JUMPER MUST BE INSTALLED FOR GAMES USING 8MB ROM(S) AT LOCATIONS U17, U21, U36 AND/OR U37.
Fonts used in this Schematic: Arial (Arial.ttf) for normal text, Symbol Proportional BT (Symbpron.ttf) for Micro(μ) and Ohm (Omega) (Ω) & Wingdings 2 (Windng2.ttf) for Special Symbols or Check Boxes.

STERN
PINBALL, INC.
126

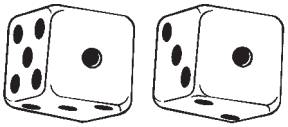

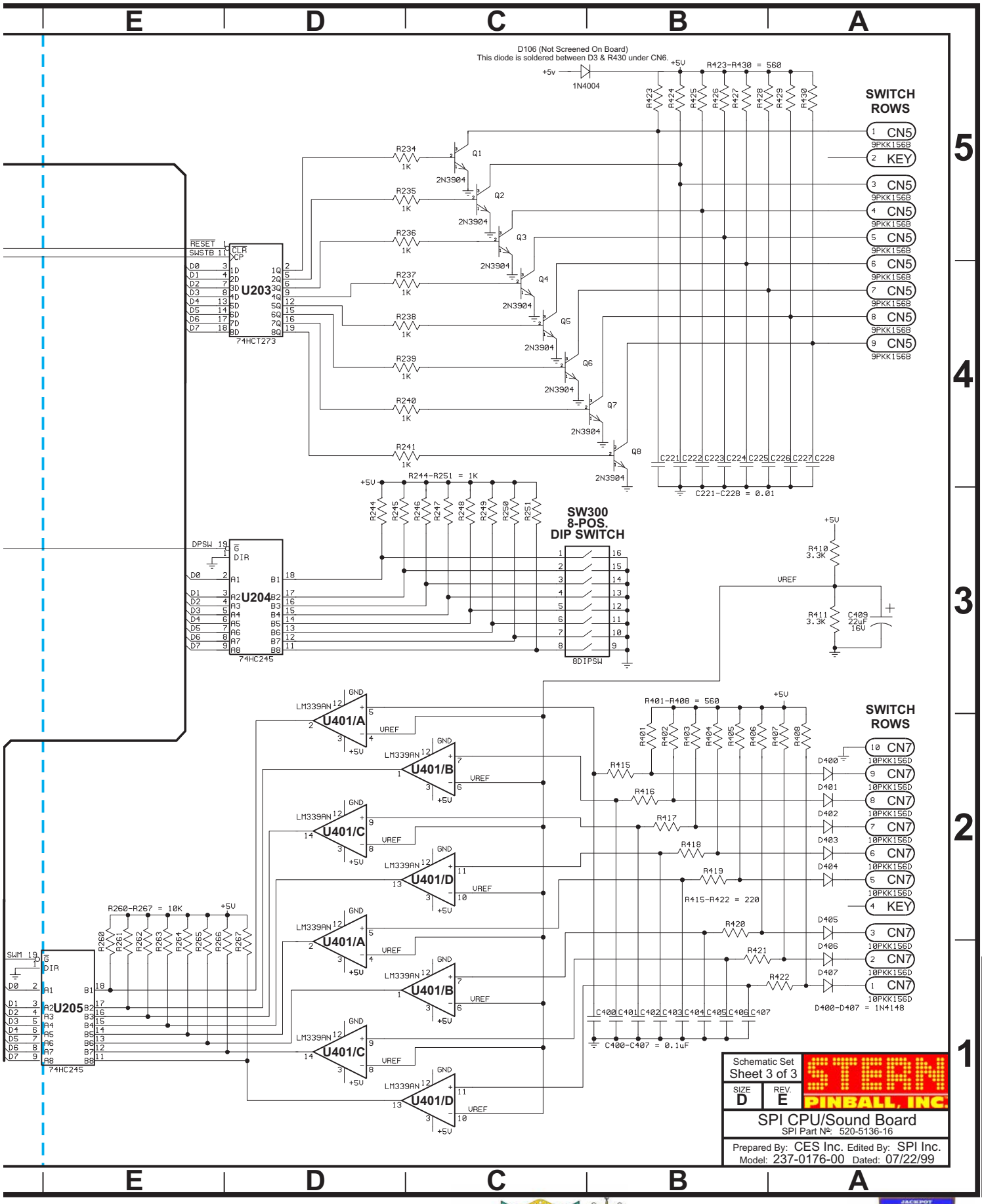
D106 (Not Screened On Board)
This diode is soldered between D3 & R430 under CN6.
1N4004
R423-R430 = 560
SWITCH ROWS
CN5
9PKK156B
KEY
U203
74HCT273
Q1
Q2
Q3
Q4
Q5
Q6
Q7
Q8
2N3904
C221-C228 = 0.01
R244-R251 = 1K
SW300
8-POS.
DIP SWITCH
8DIPSW
U204
74HC245
R410
3.3K
R411
3.3K
C409
22uF
16V
VREF
U401/A
U401/B
U401/C
U401/D
LM339AN
R401-R408 = 560
CN7
10PKK156D
R415-R422 = 220
D400-D407 = 1N4148
C400-C407 = 0.1uF
R260-R267 = 10K
U205
74HC245
Schematic Set
Sheet 3 of 3
SIZE
D
REV.
E
STERN
PINBALL, INC.
SPI CPU/Sound Board
SPI Part №: 520-5136-16
Prepared By: CES Inc. Edited By: SPI Inc.
Model: 237-0176-00 Dated: 07/22/99

CPU/Sound Board Component Layout

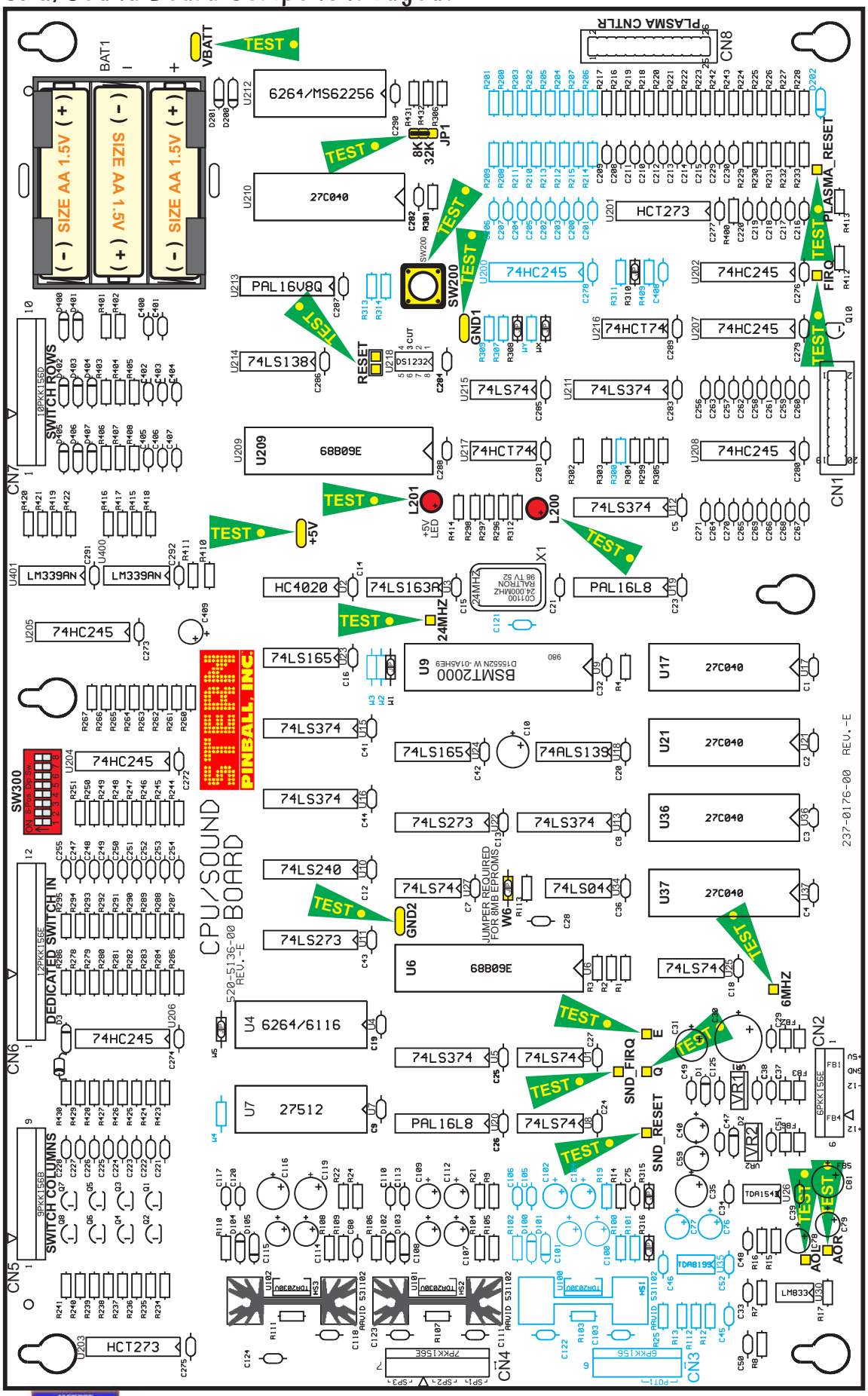

Test Points:

- ←VBATT
- ←8K/32K JUMPER JP1
- ←PLASMA_RESET
- ←FIRQ
- ←SW200
- ←GND1
- ←RESET
- LEDs :
- ←L201+5v & L200
- ←+5V
- ←24MHZ
- REQUIRED FOR 8MB EPROM USE
- ←W6 JUMPER
- ←GND2
- ←6MHZ
- ←E
- ←SND_FIRQ & Q
- ←SND_RESET
- ←AOL & AOR

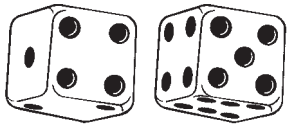

CPU/Sound Board Parts

ITEM	QTY	PART NUMBER	REF-DESIGNATOR	DESCRIPTION (NS = Not Stuffed)
—	**1**	**520-5136-64**	**CPU/Sound Board Mono (FCC FEB98)**	**Complete PCB Assembly**
01	1	545-5685-00	BAT1 HOLDER ***(Always replace all 3, Size AA 1.5v Cells, with new ones, when required)***	
02	79	125-5031-00	C1, C2, C3, C4, C5, C7, C8, C9, C12, C13, C14, C15, C16, C18, C19, C20, C21, C23, C24, C25, C26, C28, C32, C33, C34, C36, C38, C39, C41, C42, C43, C44, C47, C49, C110, C111, C113, C117, C118, C120, C123, C124, C125, C255, C272, C273, C274, C275, C276, C277, C279, C280, C281, C282, C283, C284, C285, C286, C287, C288, C289, C290, C291, C292, C400>C401, C402>C404, C405>C407 (C45, C46, C52, C103, C105, C106, C122: NS)	0.1uF, (104), Axial Cer. Cap.
03	2	125-5017-00	C10, C35	10uF, 16v, Radial Tant. Cap.
04	3	125-5043-00	C29, C37, C51	0.001uF, (102), Cap.
05	1	125-5037-00	C30	1000uF, 16v, Radial Lytic Cap.
06	2	125-5019-00	C31, C81	470uF, 25v, Radial Lytic Cap.
07	4	125-5020-00	C40, C59, C108, C115 (C76, C77, C101: NS)	22uF, 25v, Radial Lytic Cap.
08	4	125-5039-00	C48, C50, C75, C80	0.0022uF, (222), Cap.
09	6	125-5017-00	C78, C79, C107, C114 (C100: NS)	10uF, 25v-35v, Radial Lytic Cap.
10	2	125-5015-00	C109, C112 (C102, C104: NS)	100uF, 25v, Rad. Ltc. Cap.
11	2	125-5012-00	C116, C119	220uF, 25v, Radial Lytic Cap.
12	0	125-5038-00	(C121: NS)	100pF, (101), Cap.
13	44	125-5028-00	C208>C215, C216>C220, C229, C230, C247>C254, C256>C263, C264>C271 (C200>C207: NS)	470pF, (471), Cer. Cap.
14	8	125-5029-00	C221>C228 (C408: NS)	0.01uF, (103), 100v Cap.
15	1	125-5014-00	C409	22uF, 16v, Radial Lytic Cap.
16	1	045-5015-01	CN1	20-Pin, 0.1 HEADER
17	1	045-5015-06	CN2 (Key Pin-5) (CN3: NS)	6PKK156
18	1	045-5015-07	CN4 (Key Pin-5)	7PKK156
19	1	045-5013-00	CN5 (Key Pin-2)	9PKK156
20	1	045-5015-00	CN6 (Key Pin-5)	12PKK156
21	1	045-5014-01	CN7 (Key Pin-4)	10PKK156
22	1	045-5015-26	CN8 X2	26-Pin, 0.1 HEADER
23	7	112-5003-00	D1, D2, D3, D102, D103, D104, D105 (D100, D101: NS)	1N4004, Diode
24	2	112-5008-00	D200, D201	1N5817, Diode
25	8	112-0054-00	D400, D401, D402>D404, D405>D407 (D202: NS)	1N4148, Diode
26	6	n/a	(FB1)-FB2, FB3-(FB4), (FB5)-FB6	Ferrite Bead *(if required, call Tech Support)*
27	**1**	**165-5099-00**	**L200, L201**	**LED T1-3/4 DIFFUSER LED**
28	10	110-0069-00	Q1>Q8, Q10 (Q9 Not Used)	2N3904, Transistor
29	36	121-5011-00	R1>R3, R4, R113, R224>R228, R244>R251, R260>R267, R296>R298, R299, R301, R302>R305, R306, R413, R431>R432 (R200>R207, R409: NS)	10K Ω 1/4W Res.
30	1	121-5018-00	R7	1.5K Ω 1/4W Res.
31	5	121-5023-00	R9, R14, R104, R106, R110 (R100, R102: NS)	22K Ω 1/4W Res.
32	20	121-5009-00	R15, R8, R234>R241, R278>R286, R412	1K Ω 1/4W Res.
33	2	121-5043-00	R16, R17 (R25, R112: NS)	2.2K Ω 1/4W Res.
34	3	121-5051-00	R21, R22, R24 (R12, R13, R19: NS)	100K Ω 1/4W Res.
35	2	121-5046-00	R105, R109 (R101: NS)	470K Ω 1/4W Res.
36	2	121-5009-00	R107, R111 (R103: NS)	1K Ω 1/4W Res.
37	9	121-5045-00	R108, R287>R294	39K Ω Res.
38	11	121-5021-00	R216>R223, R242, R243, R400	4.7K Ω 1/4W Res.
39	15	121-5033-00	R229>R233, R295, R414, R415>R422 (R208>R215: NS)	220 Ω 1/4W Res.
40	5	n/a	R308, R310, R315>R316, WX (R300, R307, R309, R311, R313>R314, WY: NS)	0Ω *Jumper Wire (24ga.)*
41	1	121-5036-00	R312	330 Ω 1/4W Res.
42	16	121-5047-00	R401>R402, R403>R405, R406>R408, R423>R430	560 Ω 1/4W Res.
43	2	121-5048-00	R410, R411	3.3K Ω 1/4W Res.
44	1	n/a	SW200	B3F4000
45	1	181-5002-00	SW300	8-Pin, Dip Switch
46	5	100-0037-00	U1, U8, U25, U27, U215	74LS74
47	1	100-0249-00	U2	74HC4020
48	1	100-0049-00	U3	74LS163
49	1	105-0052-05	U4	6116 RAM
50	3	077-5208-00	U4, U7, U212	28-Pin, IC Dip Socket
51	6	100-0064-00	U5, U12, U13, U15, U16, U211	74LS374
52	1	100-0189-01	U6, U209	68B09E
53	3	077-5209-00	U6, U9, U209	40-Pin, IC Socket
54	1	(See Pg. DR. ❸ Table)	U7	27512 EPROM
55	**1**	**105-0116-00**	**U9**	**BSMT2000**
56	1	100-0149-00	U10	74LS240
57	5	(See Pg. DR. ❸ Table)	U17, U21, U36, U37, U210	27C040 EPROM
58	5	077-5217-00	U17, U21, U36, U37, U210	32-Pin, IC Socket
59	1	100-0043-00	U18	74ALS139
60	**1**	**965-0136-00**	**U19 - YELLOW DOT**	**PAL16L8 (Programmed) YELLOW DOT**
61	**1**	**965-0137-00**	**U20 - WHITE DOT**	**PAL16L8 (Programmed) WHITE DOT**
62	2	100-0022-00	U22, U11	74LS273
63	2	100-5008-00	U23, U24	74LS165
64	1	100-5018-00	U26	TDA1543
65	1	100-0375-00	U30	LM833
66	1	100-0027-00	U34	74LS04
67	0	100-5016-00	(U35: NS)	TDA1899
68	2	100-5016-20	U101, U102 (U100 : NS)	TDA2030A
69	3	535-5000-10	U101 (HS2), U102 (HS3) (U100 (HS1): NS)	AAVID 531102 (Heat Sink)
70	2	100-5012-00	U201, U203	74HCT273
71	6	100-0338-00	U202, U204, U205, U206, U207, U208 (U200: NS)	74HC245
72	**1**	**105-5046-00**	**U212**	**MS6264A**
73	**1**	**965-6504-00**	**U213- BLUE DOT**	**PAL16L8 (Programmed) BLUE DOT**
74	1	100-0148-00	U214	74LS138
75	2	100-5015-00	U216, U217	HCT74
76	1	100-5023-00	U218	DS1232
77	2	100-0377-00	U400, U401	LM339AN
78	4	n/a	VBATT, +5v, GND1, GND2	*Test Point Wire (24ga.) Loops*
79	1	124-5002-00	VR1	LM7905CT **-5v** Regulator
80	1	124-5001-00	VR2	LM7805CT **+5v** Regulator
81	6	n/a	W1, W5, **W6* (*for 8MB EPROMs)** (W2-W3, W4: NS)	0Ω *Jumper Wire (24ga.)*
82	1	140-0011-00	X1	24Mhz
83	12	n/a	AOR, AOL, SND_RESET, SND_FIRQ, Q, E, 6Mhz, 24Mhz, FIRQ, PLASMA_RESET, RESET (X2)	*Test Points*

4-Position OPTO PC Board (Roulette Motor) Theory of Operation & Schematic

The **OPTO Printed Circuit Board** (SPI Part Nº: 520-5194-01) used in the ***Roulette Motor Assembly***, is an ordinary Photo-Interrupter designed to signal **Switches** #41 (**OP1**), #42 (**OP2**), #43 (**OP3**) and #44 (**OP4**) back to the **CPU/Sound Board** (Switch Matrix Grid). The slotted OPTO's (U-Shaped), locations **OP1, OP2, OP3** & **OP4,** contain a small infrared **LED** that beams light across the slot to an **NPN Phototransistor.** This causes the **Phototransistor** to *conduct* and *pulls down the voltage* at the base of **Q1-Q4** (2N3904 Transistors) to **.3v** *or less.* **Q1, Q2, Q3** and **Q4** (transistors) required the Base Emitter Drop Voltage (**.7v**) **plus** the Switch Drive Drop (**.1v**) to *conduct,* and since **.3v** *is less* than this **.8v**, **Q1-Q4** stay off when the *Switch Matrix Strobe* (on Pin-4 of CN1) polls them. If the Metal Flag Bracket (riveted on the CAM) of the Motor Shaft breaks the beam in the **OPTO Slot**, the **NPN Phototransistors** *stay off*, and the *base voltages* on the associated 2N3904 Transistor(s) are **pulled to .8v** during the *Switch Strobe* through the **68KΩ 1/4W Pull-Up Resistors** (this base voltage will be higher when the switch is not being polled). With the **.8v** applied to the bases, **Q1-Q4** conduct through **D1-D4**, respectively. These Diodes (1N4001) prevent certain kinds of *Matrix-Related leakages* which show up as "Phantom Switches" that completes the corners of a square in the Matrix with three (3) Real Activated Switches comprising the other three (3) corners.

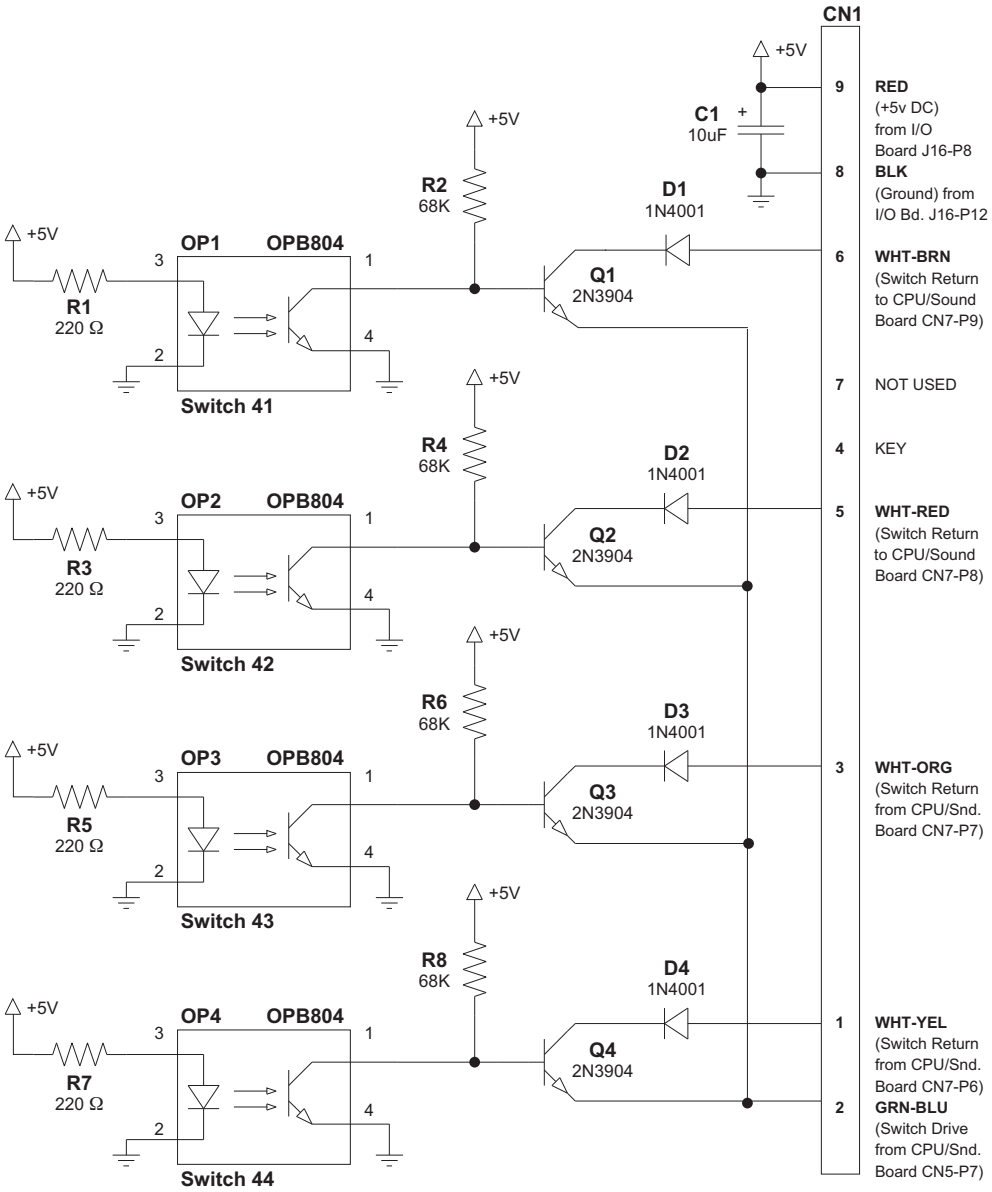

4-Position OPTO PC Board (Roulette Motor) Component Layout & Parts

Component Side

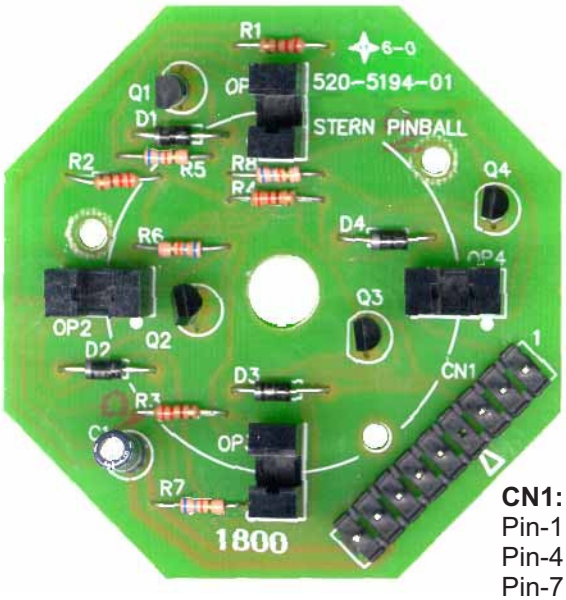

Solder Side

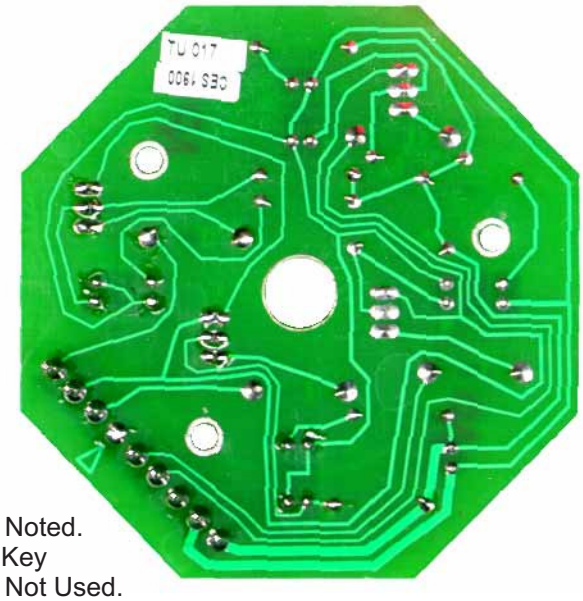

CN1:
Pin-1 is Noted.
Pin-4 = Key
Pin-7 is Not Used.

ITEM	QTY	PART NUMBER	REF-DESIGNATOR	DESCRIPTION
—	**1**	**520-5194-01**	**4-Position OPTO PC Board**	**Complete PCB Assembly**
1	4	165-5036-00	OP1, OP2, OP3, OP4	Slotted OPTO OPB804 Rec/Trans
2	4	112-5001-00	D1, D2, D3, D4	1N4001, Diode
3	4	121-5014-00	R1, R3, R5, R7	220Ω 1/4W Resistor 5%
4	4	121-5035-00	R2, R4, R6, R8	68KΩ 1/4W Resistor 5%
5	1	125-5017-00	C1	10uf, 35v Radial Electrolytic Cap. (Panasonic ECE-A1VU100 (35v) or eqv.)
6	4	110-0069-00	Q1, Q2, Q3, Q4	2N3904, Transistor
7	1	045-5009-09	CN1	9x1, .156" Header Connector Motor

3-Position OPTO PC Boards (Slot Machine) Theory of Operation & Schematic

As light from the **Transmitter LED1** falls on the **Receiver LED1**, it generates a Positive Bias Voltage (0.7v to 1.5v) which is applied to the **Gate** (**G**) of **Q2 (Fet MMBF5460)** turning **Q2** off. When **Q2** is held off, no current flows through **Q3**'s **(2N3906) Base** (**B**). With no *base current*, **Q3** is off and acts as an *OPEN SWITCH*. When the light is interrupted *(BLOCKED)* **R1** (Rec. Bd.) bleeds the gate voltage off of **Q2** allowing it to conduct, switching **Q3** on, which acts as a *CLOSED SWITCH*. The **LED2 & LED3 (Trans/Rec) Circuit** operates identical as the **LED1 Circuit**.

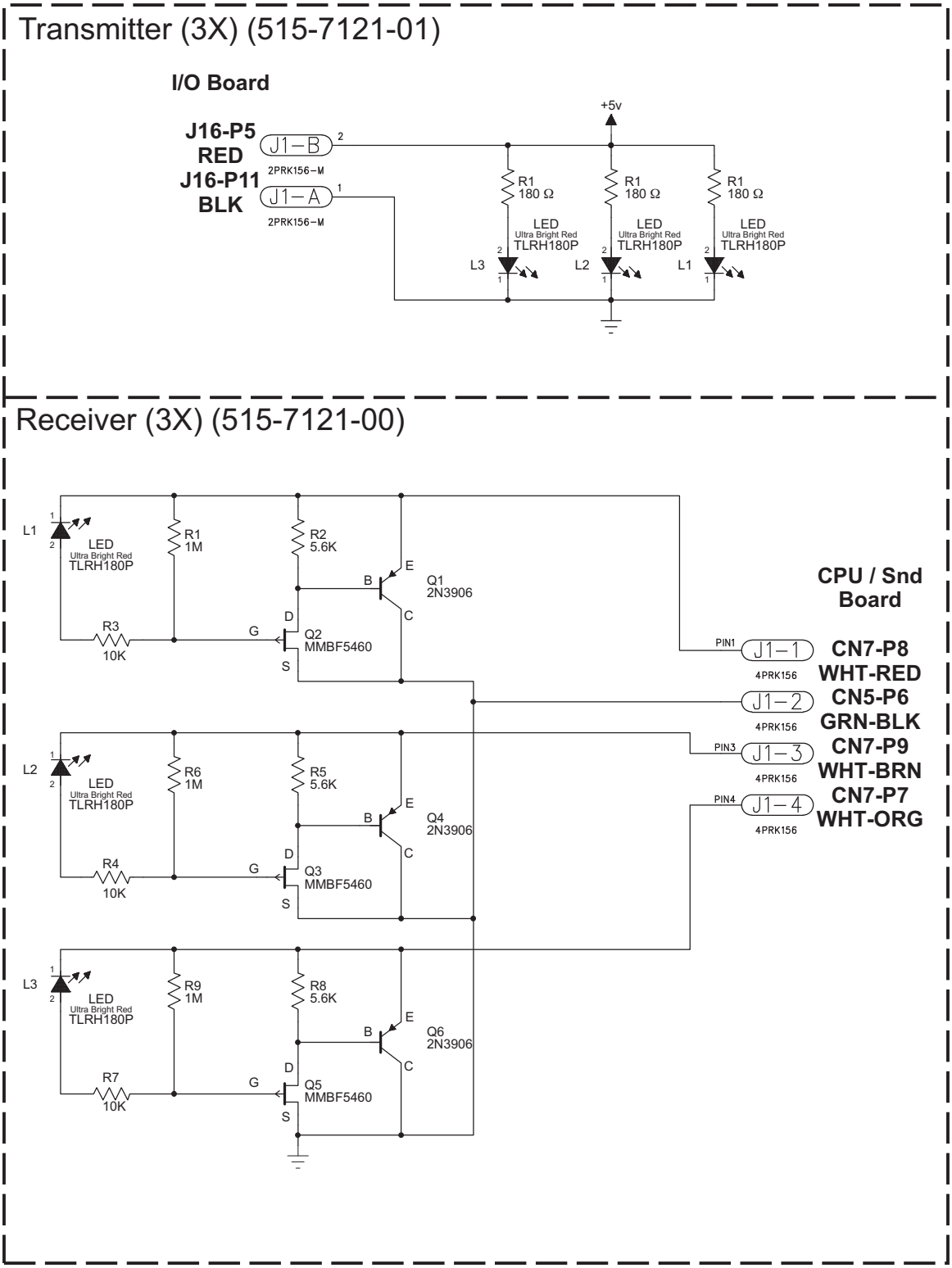

3-Position OPTO PC Boards (Slot Machine) Component Layout & Parts

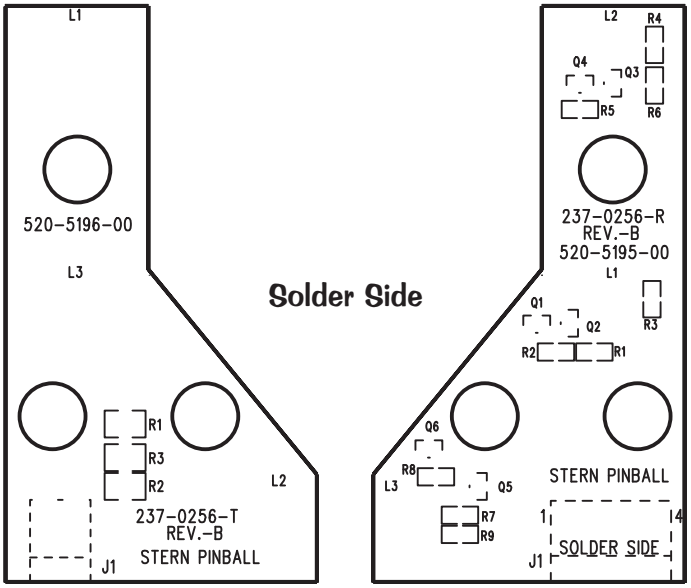

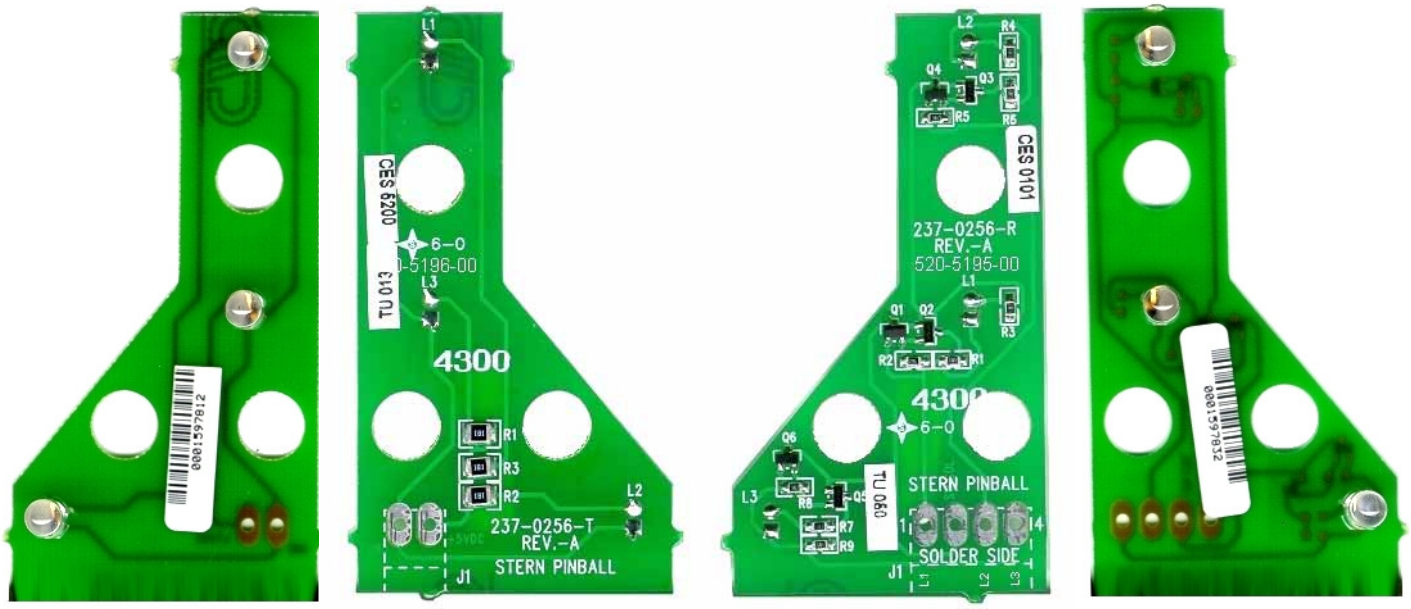

Component Side | Solder Side | Solder Side | Component Side

ITEM	QTY	PART NUMBER	REF-DESIGNATOR		DESCRIPTION
A	**1**	**515-7121-01-65** *(incl. soldered Cable & Conn.)*	**3-Pos. OPTO Trans. Bd.**		PCB Assy. (with **all Items 1-5**)
--	**1**	**520-5196-00**	**---**		**PCB Assy.** (with **Items 1-3** only)
1	3	165-5052-00	L1, L2, L3		**LED TLRH180P** (**Ultra Bright Red**)
2	3	121-5086-00	R1, R2, R3	(Manex Nº: 101-0006254)	180 Ω 1/4W (Res180E1/4W1210)
3	0	n/a	J1 (Connector Not Used, Solder wires direct onto pads)		
4	3	545-5518-00	n/a		OPTO PCB Rubber Gromment
5	3	530-5308-02	n/a		OPTO PCB Brass Tube Spacer
B	**1**	**515-7121-00-65** *(incl. soldered Cable & Conn.)*	**3-Pos. OPTO Rec. Bd.**		**PCB Assy.** (with all **Items 1-8**)
--	**1**	**520-5195-00**	**3X OPTO Rec. Bd.**		**PCB Assy.** (with **Items 1-6** only)
1	3	165-5052-00	L1, L2, L3		**LED TLRH180P** (**Ultra Bright Red**)
2	3	121-5084-00	R3, R4, R7	(Manex Nº: 101-0001827)	10K Ω (Res10K 1/10W 0805)
3	3	121-5087-00	R1, R6, R9	(Manex Nº: 101-0001907)	1M Ω (Res1M 1/10W 0805)
4	3	121-5085-00	R2, R5, R8	(Manex Nº: 101-0006077)	5.6K Ω (Res5.6K 1/10W 0805)
5	3	112-5015-00	Q2, Q3, Q5	(Manex Nº: 201-0003680)	2N5469 (MMBF5460), Transistor
6	3	112-5016-00	Q1, Q4, Q6	(Manex Nº: 211-0003587)	2N3906, Transistor
7	3	545-5518-00	n/a		OPTO PCB Rubber Gromment
8	3	530-5308-02	n/a		OPTO PCB Brass Tube Spacer

Dot Display (5X7) x3 PC Bd. (Slot Machine) Schematic

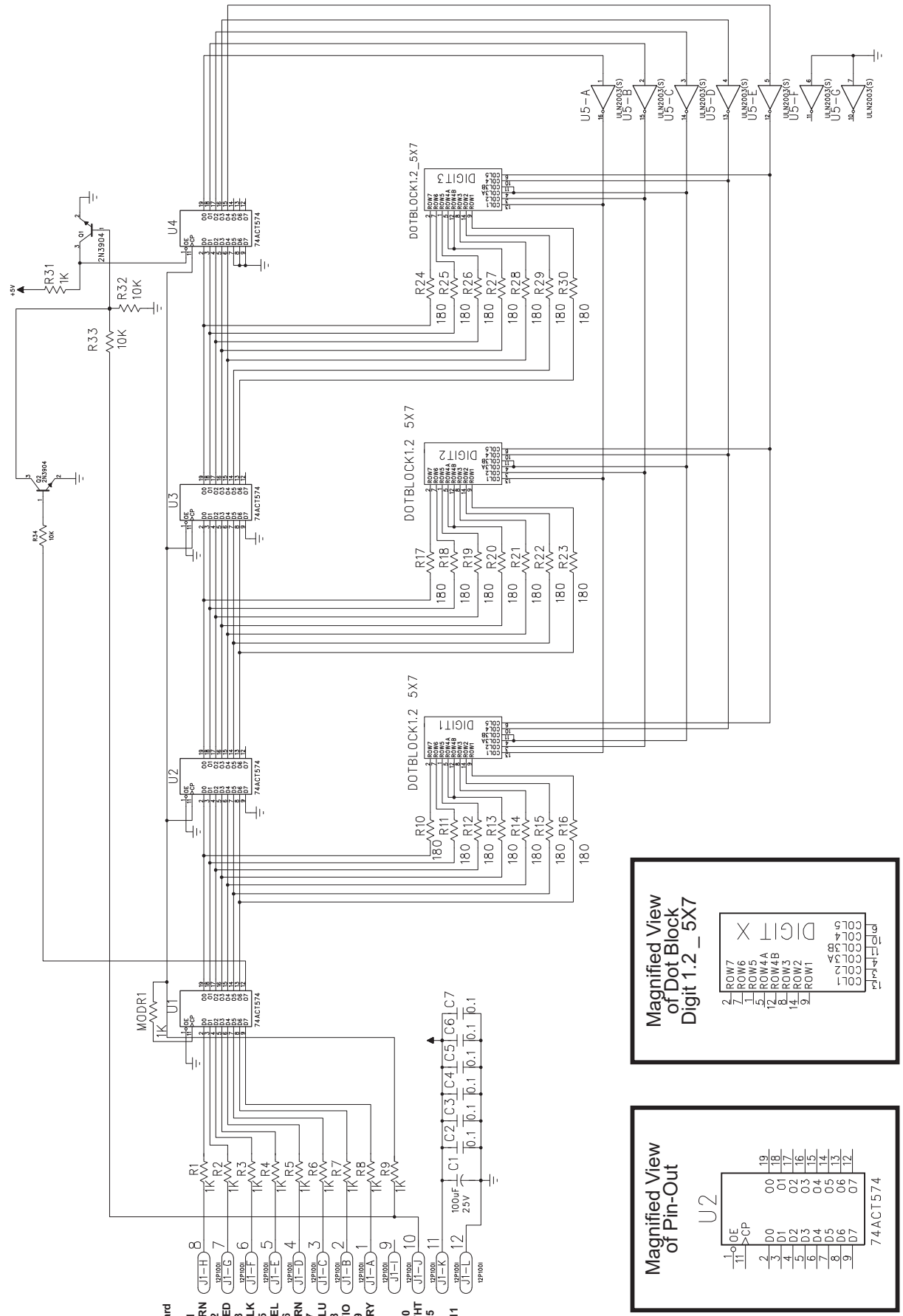

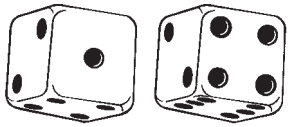

Dot Display (5X7) x3 PC Bd. (Slot Machine) Component Layout & Parts

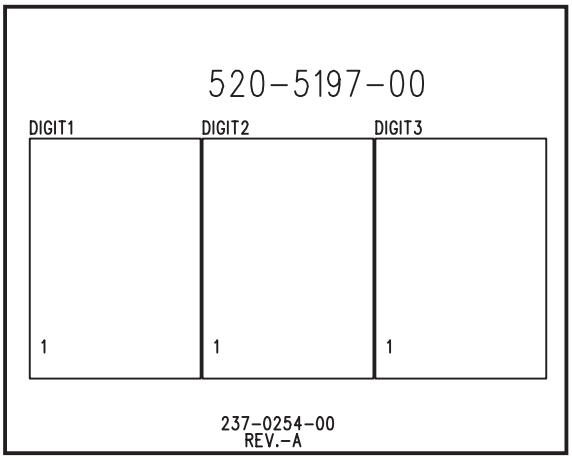

Component Side

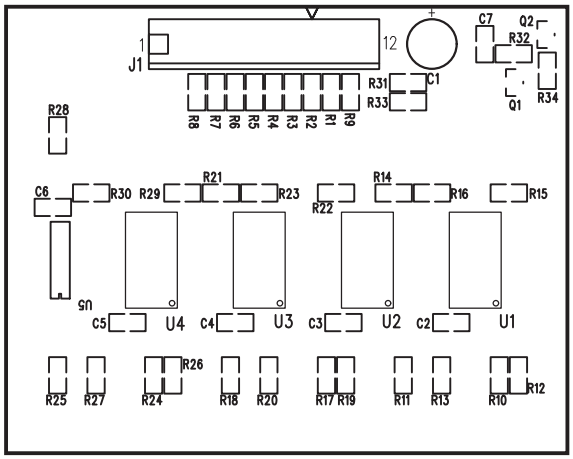

Solder Side

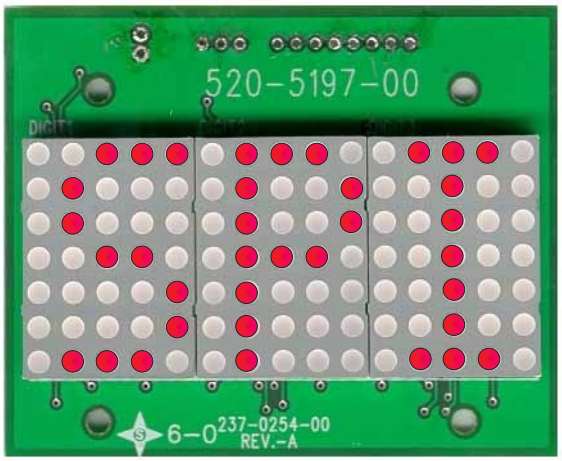

Component Side

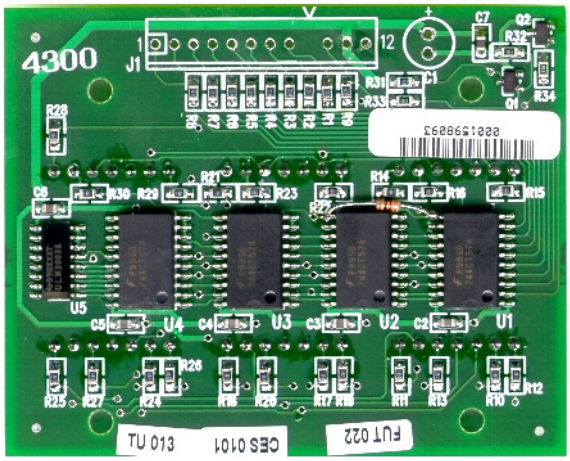

Solder Side

ITEM	QTY	PART NUMBER	REF-DESIGNATOR		DESCRIPTION
A	**1**	**520-5197-00**	**Dot Display (5X7) x3 PC Board**		**PCB Assembly**
1	1	100-5035-00	J1	(Manex Nº: 315-0004125)	9T Conn. 12P.1VM
2	2	112-5017-00	Q1, Q2	(Manex Nº: 211-0003589)	2N3904S 40V 0.2A
3	4	100-5036-00	U1, U2, U3, U4	(Manex Nº: 221-0006048)	74ACT574
4	6	100-5039-00	C2-C7	(Manex Nº: 121-0004238)	Cap. 104-0805 0.1 50V
5	3	100-5040-00	DIGIT1, DIGIT2, DIGIT3	(Manex Nº: 430-0006059)	Dot Block 1.2_5X7 GMA8875C
6	3	121-5084-00	R32-R34	(Manex Nº: 101-0001827)	Res. 10K 1/10W 0805
7	10	121-5088-00	R1-R9, R31	(Manex Nº: 101-0001905)	Res. 1K 1/10W 0805
8	21	121-5086-00	R10-R30	(Manex Nº: 101-0001897)	Res. 180 Ω 1/10W 0805
9	1	100-5037-00	C1	(Manex Nº: 131-0003773)	T. Cap. 100uF 25V
10	1	100-5038-00	U5	(Manex Nº: 225-0005340)	ULN2003(S)
11	1	121-5089-00	MOD1	(Manex Nº: 105-0002703)	Res. 1K 1/8W 5CF

Solenoid Expander PC Board Schematic

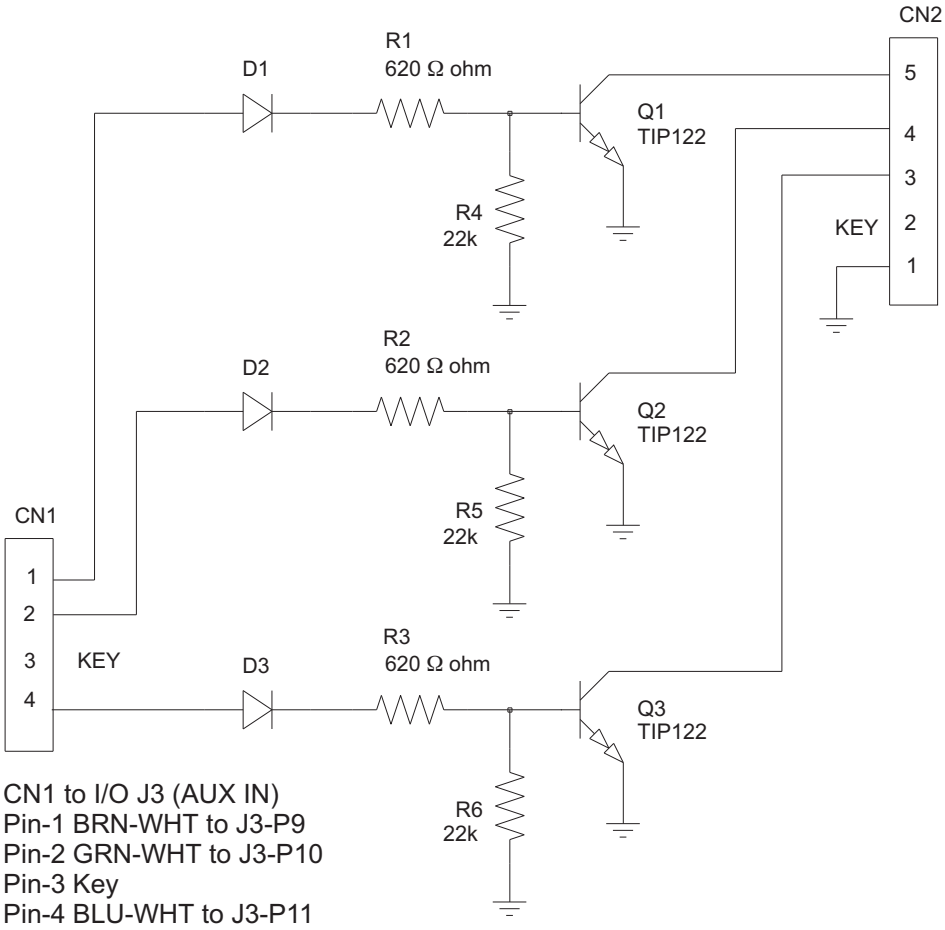

CN2 to Coils to I/O J7-P1 20v BRN

Pin-1 GND
Pin-2 Key
Pin-3 ORG
Right Up/Down Post (Aux. 3)
Pin-4 RED
Center Up/Down Post (Aux. 2)
Pin-5 WHT
Left Up/Down Post (Aux. 1)

CN1 to I/O J3 (AUX IN)
Pin-1 BRN-WHT to J3-P9
Pin-2 GRN-WHT to J3-P10
Pin-3 Key
Pin-4 BLU-WHT to J3-P11

See next page for more details.

Component Side

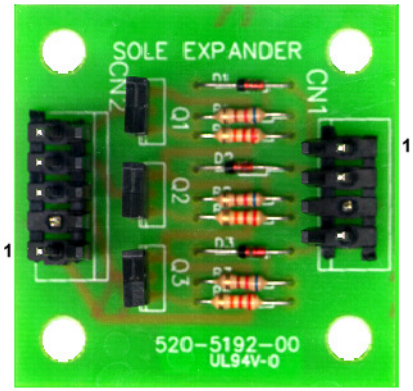

Solenoid Expander PC Board Component Layout & Parts

Component Side

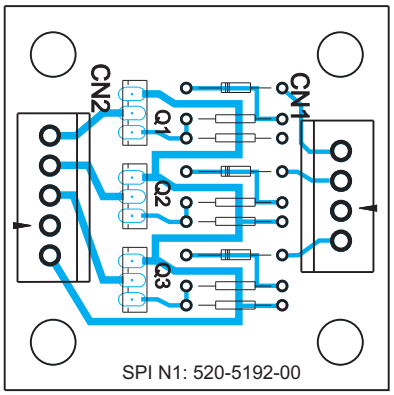

Solder Side

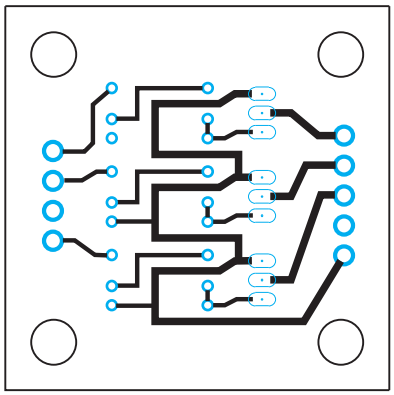

Solder Side

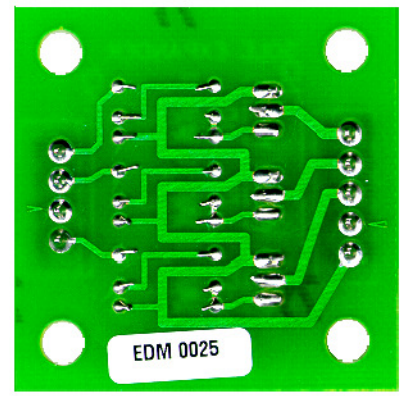

ITEM	QTY	PART NUMBER	REF-DESIGNATOR	DESCRIPTION
—	**1**	**520-5192-00**	**Solenoid Expander PC Board**	**Complete PCB Assembly**
1	1		CN1	Connector, 4X .156”
2	1		CN2	Connector, 5X .156”
3	3	112-5014-00	D1, D2, D3	1N914, Signal Diode
4	3	121-5003-00	R1, R2, R3	620Ω, 1/4W CF Resistor
5	3	121-5042-00	R4, R5, R6	22KΩ, 1/4W CF Resistor
6	3	110-0067-00	Q1, Q2, Q3	Tip122 (NPN Darl. Transistor)

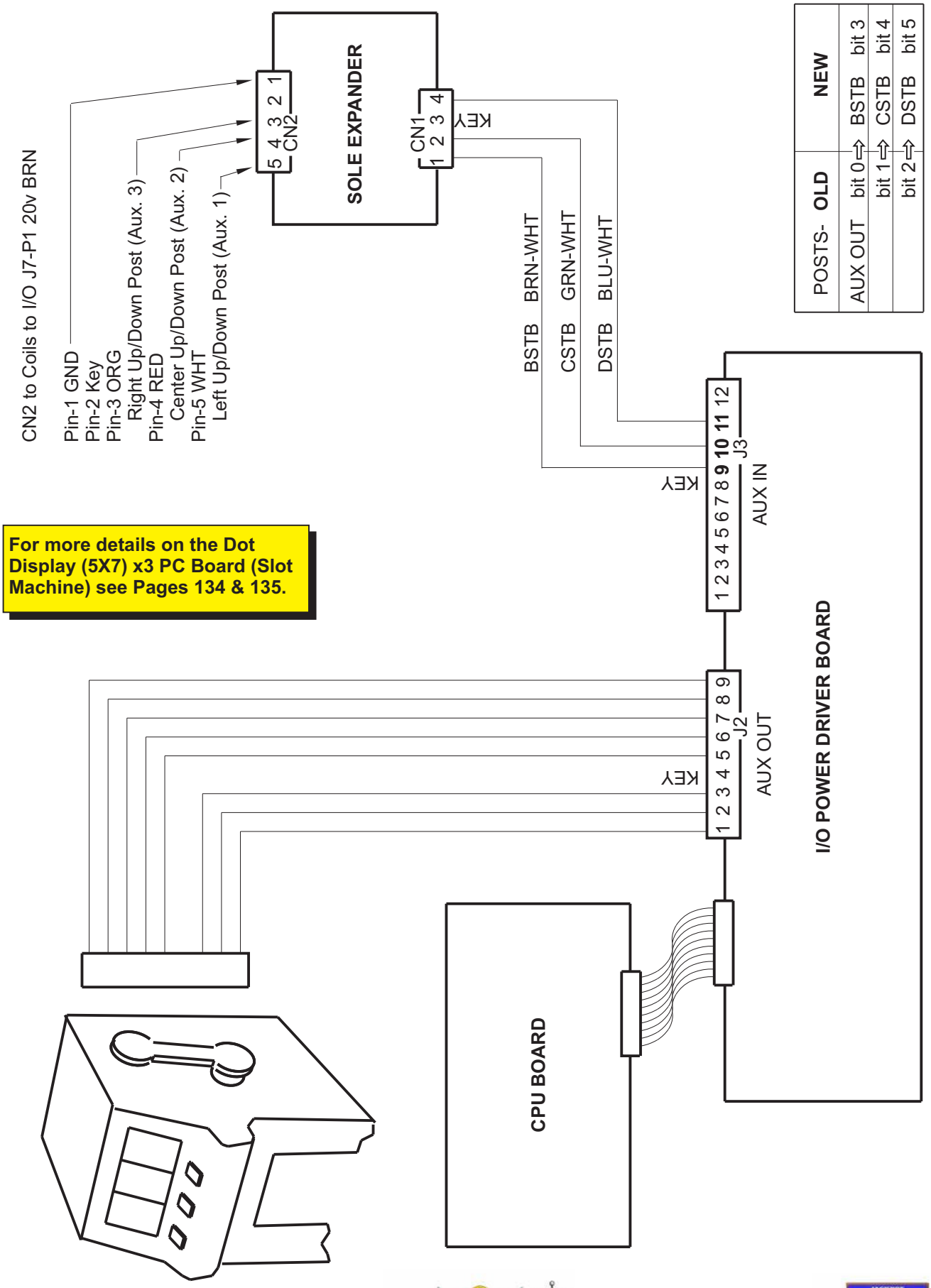

For more details on the Dot Display (5X7) x3 PC Board (Slot Machine) see Pages 134 & 135.

Playfield Switch OPTO "Long-Hop" Boards Theory of Operation & Schematic

The light falling on **LED** (**CR1**) generates a voltage which is applied to the input (Pin-2) of the **LM311 Comparator** (**U1**). **R1** bleeds off excess charge. At about a volt input from **LED** (**CR1**) the **Comparator** (**U1**) *trips & drives* either **Q1** *(during switch line strobes)* or the indicator **LED** (**CR2**) *(in between strobes).* If a switch line is being strobed, the emitter of **Q1** drops to the saturation voltage of the *Switch Line Driver,* about **.3 volts**. This plus the **.7 volt** drop on the base give a **1v** forward bias voltage to **Q1**, which is lower than the **1.7v** drop on **LED** (**CR2**) so the current flows through the Transistor during strobes. This drives **Q1** on and *makes the switch*. If the strobe line is high, then the **1.7v** path through **LED** (**CR2**) is lower than **Q1**'s bias voltage so current flows through **LED** (**CR2**) and the indicator lights. **D1** prevents reverse bleed, **R2** and **R3** form the voltage divider for the trip point, **R4** is a current limiter for both **Q1** and **CR2**, **C1** and **C2** are general noise-filter caps.

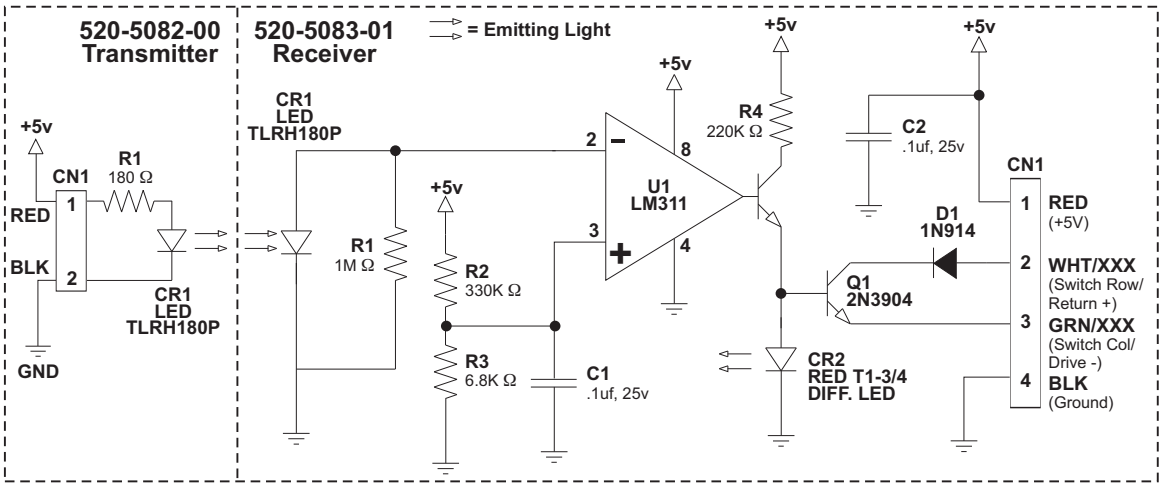

Playfield Switch OPTO "Long-Hop" Boards Component Layout & Parts

520-5082-00 (TRANS) — **Solder Side (Green)**

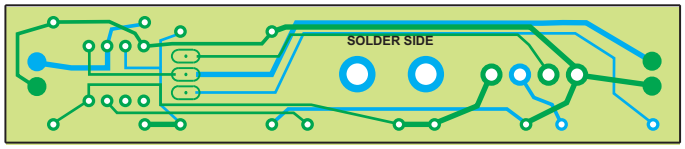

Solder Side (Green) — **520-5083-01 (REC)**

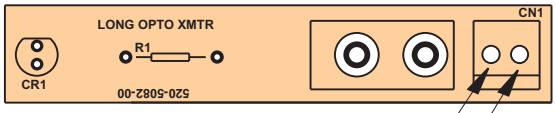

Component Side (Beige)

Pin-1 **RED** (+5v)
Pin-2 **BLK** (GROUND)
CN1

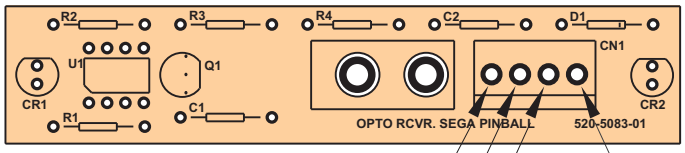

Component Side (Beige)

Pin-3 **GRN/XXX** (Sw. Drive « - »)
Pin-2 **WHT/XXX** (Sw. Return « + »)
Pin-1 **RED** (+5v)
Pin-4 **BLK** (GROUND)
CN1

Note: *In this game, this Combo OPTO Board is used as a Playfield Detection Switch for the Ball Lock under the Roulette Wheel. See the Switch Matrix Grid (Pgs. 16-17 or 94). 1 Pair is used for Switch 32, OPTO (GRN-YEL, WHT-GRY).*

ITEM	QTY	PART NUMBER	REF-DESIGNATOR		DESCRIPTION
A	**1**	**520-5083-01**	**OPTO Receiver Board**		**Complete PCB Assembly**
1	1	165-5052-00	**CR1**		**LED TLRH180P (Ultra Bright Red)**
2	1	165-5099-00	**CR2**		**LED T1-3/4 RED DIFFUSER**
3	1	112-5014-00	D1		1N914, Diode
4	1	121-5013-00	R1		1M Ω 1/4W Res., 5%
5	1	121-5037-00	R2		330K Ω 1/4W Res., 5%
6	1	121-5077-00	R3		6.8K Ω 1/4W Res., 5%
7	1	121-5014-00	R4		220 Ω 1/4W Res., 5%
8	2	125-5023-00	C1, C2		.1uF, 25v, Axial Ceramic Cap.
6	1	100-5025-00	U1		LM311
7	1	110-0069-00	Q1		2N3904, Transistor
8	1	045-5200-04	CN1	(Molex 50-84-1040)	4X1, .156" Locking Straight Hdr. Conn.
B	**1**	**520-5082-00**	**OPTO Transmitter Board**		**Complete PCB Assembly**
1	1	165-5052-00	**CR1**		**LED TLRH180P (Ultra Bright Red)**
2	1	121-5066-00	R1		180 Ω 1/4W Res.
3	1	045-5206-02	CN1	(Molex 50-84-1020)	2X1, .156" Locking Straight Hdr. Conn.

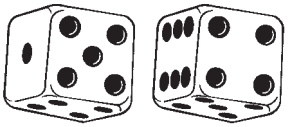

Appendixes A through I

Appendix
Table of Contents

- Appendix A, Pinball Game Firmware Table 140-141
  ...describes the EPROM with its chip size, the Stern™ Pinball, Inc. (SPI) Part №, version (if applicable), and CPU Board & CPU/Sound Board Pin location(s).
- Appendix B, Semi-Conductors / I.C.'s / Relays Cross-Reference Table 142
  ...describes diodes and transistors with Source №, SPI Part №, NTE №, ECG №, Radio Shack № & RCA Part № (If applicable).
- Appendix C, Game Mfg. Date, Manual Part № & CPU Jumper Table 143
  ...provides the Game Manufactured Date & Manual Part №, the CPU version, the EPROM Position, Jumpers Installed and Jumpers Removed (games specified).
- Appendix D, Board Type Table 144-145
  ...provides Board Part №s for Games Laser War through Batman Forever (Flipper, Sound, Power Supply, Dot Matrix Display, Display Controller & OPTOs) and the White Star Board System, Games Apollo 13 through current (Flipper*, I/O Power Driver, CPU/Sound, Display Power Supply, Dot Matrix Display, Display Controller & OPTOs; *Flipper Board with the White Star Bd. System for A13 & Golden Eye only.)
- Appendix E, Generic Coil Cross-Reference Guide & Flipper Coil Table 146-147
  ...provides the Coils used with Part N° and Gauge-Turns (of the coil).
- Appendix F, Motor Specification Table 148-149
  ...provides all the Motor Function, Specifications and Part № for Games Laser War through current.
- Appendix G, Part Number Prefix Classification Codes.....150
  ...explains how our Part Numbers are developed to help sort parts easier.
- Appendix H, Playfield Inserts (Plastic Light Covers) 151
  ...gives a pictoral view with the name and Part № of all the inserts used (also gives the Color Code Chart).
- Appendix I, Stand-Up Targets (Happ Modular & Regular) 152
  ...gives a pictoral view with the name and Part № of all the Single Stand-Up Targets used (also gives the Color Code Chart).
- Glossary of Terms.....153
  ...gives definitions or explanations of some pinball terms and acronyms.
- Parts Order Checklist Notes 154
  ...keep track of your parts ordered through your distributor for this game.

APPENDIX A

Pinball Game Firmware Table

EPROM	Chip Size	Program Part Nº	USA Ver.	Bd. Loc.	Raw Part Nº
Laser War					
CPU	(256K)	965-0004-00		C5	960-5007-00
Sound (Old)	(256K)	965-0005-00		J5	960-5007-00
Sound (Old)	(256K)	965-0006-00		J6	960-5007-00
Sound (Old)	(256K)	965-0007-00		J7	960-5007-00
			- OR -		
Sound	(256K)	965-0008-00		7F	960-5007-00
Sound 1	(512K)	965-0009-00		6F	960-7001-02
Sound 2	(512K)	965-0010-00		4F	960-7001-02
Secret Service					
CPU	(256K)	965-0011-00	A-6	B5	960-5007-00
CPU	(256K)	965-0012-00	A-6	C5	960-5007-00
Voice 1	(512K)	965-0014-00		6F	960-7001-02
Voice 2	(512K)	965-0015-00		4F	960-7001-02
Sound	(256K)	965-0013-00		7F	960-5007-00
Torpedo Alley					
CPU	(256K)	965-0016-00	A02-1	B5	960-5007-00
CPU	(256K)	965-0017-00	A02-1	C5	960-5007-00
Voice 1	(512K)	965-0019-00		6F	960-7001-02
Voice 2	(512K)	965-0020-00		4F	960-7001-02
Sound	(256K)	965-0018-00		7F	960-5007-00
Time Machine					
CPU	(128K)	965-0021-00	A02-3	B5	960-5006-00
CPU	(256K)	965-0022-00	A02-3	C5	960-5007-00
Voice 1	(512K)	965-0024-00		6F	960-7001-02
Voice 2	(512K)	965-0025-00		4F	960-7001-02
Sound	(256K)	965-0023-00		7F	960-5007-00
Playboy 35th Anniversary					
CPU	(256K)	965-0046-00	A02-3	B5	960-5007-00
CPU	(256K)	965-0047-00	A02-3	C5	960-5007-00
Voice 1	(512K)	965-0049-00		6F	960-7001-02
Voice 2	(512K)	965-0050-00		4F	960-7001-02
Sound	(256K)	965-0048-00		7F	960-5007-00
ABC Monday Night Football					
CPU	(128K)	965-0031-00	A02-7	B5	960-5006-00
CPU	(256K)	965-0032-00	A02-7	C5	960-5007-00
Voice 1	(512K)	965-0034-00		6F	960-7001-02
Voice 2	(512K)	965-0035-00		4F	960-7001-02
Sound	(256K)	965-0033-00		7F	960-5007-00
Robocop					
CPU	(256K)	965-0036-00	A03-4	B5	960-5007-00
CPU	(256K)	965-0037-00	A03-4	C5	960-5007-00
Voice 1	(512K)	965-0039-00		6F	960-7001-02
Voice 2	(512K)	965-0040-00		4F	960-7001-02
Sound	(256K)	965-0038-00		7F	960-5007-00
Phantom of the Opera					
CPU	(128K)	965-0026-00	A03-2	B5	960-5006-00
CPU	(256K)	965-0027-00	A03-2	C5	960-5007-00
Voice 1	(512K)	965-0029-00		6F	960-7001-02
Voice 2	(512K)	965-0030-00		4F	960-7001-02
Sound	(256K)	965-0028-00		7F	960-5007-00
Back to the Future					
CPU	(256K)	965-0041-00	A02-0	B5	960-5007-00
CPU	(256K)	965-0042-00	A02-0	C5	960-5007-00
Voice 1	(512K)	965-0044-00		6F	960-7001-02
Voice 2	(512K)	965-0045-00		4F	960-7001-02
Sound	(256K)	965-0043-00		7F	960-5007-00
The Simpsons					
CPU	(128K)	965-0051-00	A02-7	B5	960-5006-00
CPU	(256K)	965-0052-00	A02-7	C5	960-5007-00
Voice 1	(512K)	965-0054-00		6F	960-7001-02
Voice 2	(512K)	965-0055-00		4F	960-7001-02
Sound	(256K)	965-0053-00		7F	960-5007-00
Checkpoint					
CPU	(128K)	965-0056-00	A1-7	B5	960-5006-00
CPU	(256K)	965-0134-00	A1-7	C5	960-5007-00
Voice 1	(1M)	965-0057-00		F7	960-5009-00
Voice 2	(1M)	965-0058-00		F5	960-5009-00
Sound	(256K)	965-0059-00		F4	960-5007-00
Display	(512K)	965-0060-00	CP80	U8	960-7001-02
Teenage Mutant Ninja Turtles					
CPU	(128K)	965-0061-00	A1.04	B5	960-5006-00
CPU	(256K)	965-0062-00	A1.04	C5	960-5007-00
Voice 1	(1M)	965-0063-00		F5/6	960-5009-00
Voice 2	(1M)	965-0064-00		F4/5	960-5009-00
Sound	(256K)	965-0065-00		F7	960-5007-00
Display	(512K)	965-0066-00	A1.04	U8	960-7001-02
Batman					
CPU	(128K)	965-0067-00	A1.06	B5	960-5006-00
CPU	(256K)	965-0135-00	A1.06	C5	960-5007-00
Voice 1	(2M)	965-0068-00		U17	960-5010-00
Voice 2	(1M)	965-0069-00		U21	960-5009-00
Sound	(256K)	965-0070-00		U7	960-5007-00
Display	(1M)	965-0071-00	A1.06	U8	960-5009-00
Star Trek 25th Anniversary					
CPU	(512K)	965-0072-00	A2.01	C5	960-7001-02
Voice 1	(2M)	965-0073-00		U17	960-5010-00
Voice 2	(2M)	965-0074-00		U21	960-5010-00
Sound	(256K)	965-0075-00		U7	960-5007-00
Display	(1M)	965-0076-00	A1.09	U8	960-5009-00
Hook					
CPU	(512K)	965-0077-00	A4.08	C5	960-7001-02
Voice 1	(2M)	965-0078-00		U17	960-5010-00
Voice 2	(2M)	965-0079-00		U21	960-5010-00
Sound	(256K)	965-0080-00		U7	960-5007-00
Display	(1M)	965-0081-00	A4.01	U8	960-5009-00
Lethal Weapon 3					
CPU	(512K)	965-0082-00	A2.08	C5	960-7001-02
Voice 1	(2M)	965-0083-00		U17	960-5010-00
Voice 2	(2M)	965-0084-00		U21	960-5010-00
Sound	(256K)	965-0085-00		U7	960-5007-00
Display	(2M)	965-0086-00	A2.06	ROM 0	960-5010-00
Display	(2M)	965-0087-00	A2.06	ROM 1	960-5010-00
	(Used on Display PCB 520-5055-00)				
			-OR-		
Display	(4M)	965-0087-04	A2.06	ROM 0	960-5015-00
	(Used on Display PCB 520-5055-01)				
Star Wars					
CPU	(512K)	965-0119-00	A1.03	C5	960-7001-02
Voice 0	(4M)	965-0132-00		U17	960-5015-00
Voice 1	(2M)	965-0133-00		U21	960-5010-00
Sound	(256K)	965-0131-00		U7	960-5007-00
Display	(2M)	965-0120-00	A1.04	ROM 0	960-5010-00
Display	(2M)	965-0121-00	A1.04	ROM 1	960-5010-00
	(Used on Display PCB 520-5055-00)				
			-OR-		
Display	(4M)	965-0122-00	A1.05	ROM 0	960-5015-00
	(Used on Display PCB 520-5055-01)				
Rocky & Bullwinkle & Friends					
CPU	(512K)	965-0138-00	A1.30	C5	960-7001-02
Voice 0	(4M)	965-0139-00		U17	960-5015-00
Voice 1	(2M)	965-0140-00		U21	960-5010-00
Sound	(256K)	965-0141-00		U7	960-5007-00
Display	(4M)	965-0142-00	A1.30	ROM 0	960-5015-00
Jurassic Park					
CPU	(512K)	965-0143-00	A5.13	C5	960-7001-02
Voice 0	(4M)	965-0144-00		U17	960-5015-00
Voice 1	(2M)	965-0145-00		U21	960-5010-00
Sound	(256K)	965-0146-00		U7	960-5007-00
Display	(4M)	965-0147-00	A5.10	ROM 0	960-5015-00
Last Action Hero					
CPU	(512K)	965-0148-00	A1.12	C5	960-7001-02
Voice 0	(4M)	965-0149-00		U17	960-5015-00
Voice 1	(2M)	965-0150-00		U21	960-5010-00
Sound	(256K)	965-0151-00		U7	960-5007-00
Display	(4M)	965-0152-00	A1.06	ROM 0	960-5015-00
Tales from the Crypt					
CPU	(512K)	965-0157-00	A3.03	C5	960-7001-02
Voice 0	(4M)	965-0158-00		U17	960-5015-00
Voice 1	(2M)	965-0159-00		U21	960-5010-00
Sound	(256K)	965-0160-00		U7	960-5007-00
Display	(4M)	965-0161-00	A3.01	ROM 0	960-5015-00
The Who's Tommy					
CPU	(512K)	965-0162-00	A4.00	C5	960-7001-02
Voice 1	(4M)	965-0165-00		U17	960-5015-00
Voice 2	(4M)	965-0166-00		U21	960-5015-00
Voice 3	(4M)	965-0167-00		U36	960-5015-00
Voice 4	(4M)	965-0168-00		U37	960-5015-00
Sound	(512K)	965-0164-00		U7	960-7001-02
Display	(4M)	965-0163-00	A4.00	ROM 0	960-5015-00
WWF Royal Rumble					
CPU	(512K)	965-0169-00	A1.06	C5	960-7001-02
Voice 1	(4M)	965-0172-00		U17	960-5015-00
Voice 2	(4M)	965-0173-00		U21	960-5015-00
Voice 3	(4M)	965-0174-00		U36	960-5015-00
Sound	(512K)	965-0171-00		U7	960-7001-02
Display	(4M)	965-0170-00	A1.02	ROM 0	960-5015-00
Guns N' Roses					
CPU	(512K)	965-0175-00	A3.00	C5	960-7001-02
Voice 1	(4M)	965-0178-00		U17	960-5015-00
Voice 2	(4M)	965-0179-00		U21	960-5015-00
Voice 3	(4M)	965-0180-00		U36	960-5015-00
Voice 4	(4M)	965-0181-00		U37	960-5015-00
Sound	(512K)	965-0177-00		U7	960-7001-02
Display	(4M)	965-0176-00	A3.00	ROM 0	960-5015-00
Maverick *					
CPU	(512K)	965-0182-00	A4.04	C5	960-7001-02
Voice 1	(4M)	965-0186-00		U17	960-5015-00
Voice 2	(4M)	965-0187-00		U21	960-5015-00
Voice 3	(4M)	965-0187-01		U36	960-5015-00
Sound	(512K)	965-0185-00		U7	960-7001-02
Display*	(4M)	965-0183-00	A4.01	ROM 0	960-5015-00
Display*	(4M)	965-0184-00	A4.01	ROM 3	960-5015-00
Mary Shelley's Frankenstein *					
CPU	(512K)	965-0188-00	A1.03	C5	960-7001-02
Voice 1	(4M)	965-0192-00		U17	960-5015-00
Voice 2	(4M)	965-0193-00		U21	960-5015-00
Voice 3	(4M)	965-0194-00		U36	960-5015-00
Sound	(512K)	965-0191-00		U7	960-7001-02
Display*	(4M)	965-0189-00	A1.03	ROM 0	960-5015-00
Display*	(4M)	965-0190-00	A1.03	ROM 3	960-5015-00
Baywatch *		(CPU Board 520-5003-04)			
CPU	(512K)	965-0195-00	A4.00	C5	960-7001-02
Voice 1	(4M)	965-0196-00		U17	960-5015-00
Voice 2	(4M)	965-0197-00		U21	960-5015-00
Sound	(512K)	965-0199-00		U7	960-7001-02
Display*	(4M)	965-0200-00	A4.00	ROM 0	960-5015-00
Display*	(4M)	965-0201-00	A4.00	ROM 3	960-5015-00
Batman Forever *		(CPU Board 520-5003-04)			
CPU	(512K)	965-0202-00	A3.02	C5	960-7001-02
Voice 1	(4M)	965-0203-00		U17	960-5015-00
Voice 2	(4M)	965-0204-00		U21	960-5015-00
Sound	(512K)	965-0205-00		U7	960-7001-02
Display*	(4M)	965-0206-00	A3.00	ROM 0	960-5015-00
Display*	(4M)	965-0207-00	A3.00	ROM 3	960-5015-00

* ***Note:*** *Display* ***EPROMS (4M)*** *for* ***Maverick*** *thru* ***Batman Forever*** *require an access time of* ***120 Nsec*** *or faster.*

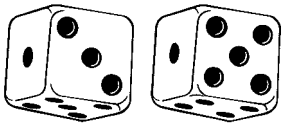

APPENDIX A

Pinball Game Firmware (for White Star Board System) Table

Apollo 13

ROM	Chip Size	Program Part Nº	USA Ver. & Check Sum	Bd. Loc.	Raw Part Nº
CPU / Sound Board:			**520-5136-00 (Stereo)**		
Game ROM	(1M)	965-0208-00	A5.01 | $09FF	U210	960-5009-00
Voice 1	(4M)	965-0209-00		U17	n/a (masked)
Voice 2	(4M)	965-0210-00		U21	n/a (masked)
Voice 3	(4M)	965-0211-00		U36	n/a (masked)
Sound	(512K)	965-0212-00		U7	960-7001-02
Display Controller Bd.:			**520-5055-01**		
Display	(4M)	965-0213-00	A5.00 | $B92B	ROM 0	960-5015-01

Golden Eye

ROM	Chip Size	Program Part Nº	USA Ver. & Check Sum	Bd. Loc.	Raw Part Nº
CPU / Sound Board:			**520-5136-00 (Stereo)**		
Game ROM	(1M)	965-0214-42	A4.04 | $3FFF	U210	960-5009-00
Voice 1	(4M)	965-0215-42		U17	n/a (masked)
Voice 2	(4M)	965-0216-42		U21	n/a (masked)
Sound	(512K)	965-0217-42		U7	960-7001-02
Display Controller Bd.:			**520-5055-01**		
Display	(4M)	965-0218-42	A4.00 | $E6ED	ROM 0	960-5015-01

Twister

ROM	Chip Size	Program Part Nº	USA Ver. & Check Sum	Bd. Loc.	Raw Part Nº
CPU / Sound Board:			**520-5136-10 (Mono)**		
Game ROM	(1M)	965-0219-41	A4.05 | $E9FF	U210	960-5009-00
Voice 1	(4M)	965-0220-41		U17	960-5015-01
Voice 2	(4M)	965-0223-41		U21	960-5015-01
Sound	(512K)	965-0221-41		U7	960-7001-02
Display Controller Bd.:			**520-5055-01**		
Display	(4M)	965-0222-41	A4.01 | $FD01	ROM 0	960-5015-01

ID4: Independence Day

ROM	Chip Size	Program Part Nº	USA Ver. & Check Sum	Bd. Loc.	Raw Part Nº
CPU / Sound Board:			**520-5136-10 (Mono)**		
Game ROM	(1M)	965-0224-45	A2.02 | $9CFF	U210	960-5009-00
Voice 1	(4M)	965-0225-45		U17	960-5015-01
Voice 2	(4M)	965-0226-45		U21	960-5015-01
Sound	(512K)	965-0227-45		U7	960-7001-02
Display Controller Bd.:			**520-5055-01**		
Display	(4M)	965-0228-45	A2.00 | $ABF7	ROM 0	960-5015-01

Space Jam

ROM	Chip Size	Program Part Nº	USA Ver. & Check Sum	Bd. Loc.	Raw Part Nº
CPU / Sound Board:			**520-5136-10 (Mono)**		
Game ROM	(1M)	965-0229-43	A3.00 | $E6FF	U210	960-5009-00
Voice 1	(4M)	965-0230-43		U17	960-5015-01
Voice 2	(4M)	965-0231-43		U21	960-5015-01
Voice 3	(4M)	965-0232-43		U36	960-5015-01
Sound	(512K)	965-0233-43		U7	960-7001-02
Display Controller Bd.:			**520-5055-01**		
Display	(4M)	965-0234-43	A3.00 | $0057	ROM 0	960-5015-01

The Star Wars Trilogy - Special Edition (S.E.)

ROM	Chip Size	Program Part Nº	USA Ver. & Check Sum	Bd. Loc.	Raw Part Nº
CPU / Sound Board:			**520-5136-10 (Mono)**		
Game ROM	(1M)	965-0235-56	A4.03 | $5EFF	U210	960-5009-00
Voice 1	(4M)	965-0236-56		U17	960-5015-01
Voice 2	(4M)	965-0237-56		U21	960-5015-01
Sound	(512K)	965-0238-56		U7	960-7001-02
Display Controller Bd.:			**520-5055-01**		
Display	(4M)	965-0239-56	A4.00 | $8817	ROM 0	960-5015-01

The Lost World: Jurassic Park

ROM	Chip Size	Program Part Nº	USA Ver. & Check Sum	Bd. Loc.	Raw Part Nº
CPU / Sound Board:			**520-5136-10 (Mono)**		
Game ROM	(1M)	965-0240-53	A2.01 | $C2FF	U210	960-5009-00
Voice 1	(4M)	965-0241-53		U17	960-5015-01
Voice 2	(4M)	965-0242-53		U21	960-5015-01
Sound	(512K)	965-0243-53		U7	960-7001-02
Display Controller Bd.:			**520-5055-01**		
Display	(4M)	965-0244-53	A2.01 | $7F46	ROM 0	960-5015-01

The X-Files

ROM	Chip Size	Program Part Nº	USA Ver. & Check Sum	Bd. Loc.	Raw Part Nº
CPU / Sound Board:			**520-5136-10 (Mono)**		
Game ROM	(1M)	965-0245-46	A3.03 | $A2FF	U210	960-5009-00
Voice 1	(4M)	965-0246-46		U17	960-5015-01
Voice 2	(4M)	965-0247-46		U21	960-5015-01
Sound	(512K)	965-0248-46		U7	960-7001-02
Display Controller Bd.:			**520-5055-01**		
Display	(4M)	965-0249-46	A3.00 | $66D0	ROM 0	960-5015-01

Starship Troopers

ROM	Chip Size	Program Part Nº	USA Ver. & Check Sum	Bd. Loc.	Raw Part Nº
CPU / Sound Board:			**520-5136-15 (Mono FCC NOV97)**		
Game ROM	(1M)	965-0250-59	A2.00 | $85FF	U210	960-5009-00
Voice 1	(4M)	965-0251-59		U17	960-5015-01
Voice 2	(4M)	965-0252-59		U21	960-5015-01
Voice 3	(4M)	965-0255-59		U36	960-5015-01
Sound	(512K)	965-0253-59		U7	960-7001-02
Display Controller Bd.:			**520-5055-02 (FCC NOV97)**		
Display	(4M)	965-0254-59	A2.00 | $E77B	ROM 0	960-5015-01

Viper Night Drivin'

ROM	Chip Size	Program Part Nº	USA Ver. & Check Sum	Bd. Loc.	Raw Part Nº
CPU / Sound Board:			**520-5136-16 (Mono FCC FEB98)**		
Game ROM	(1M)	965-0266-35	A2.01 | $C5FF	U210	960-5009-00
Voice 1	(4M)	965-0267-35		U17	960-5015-01
Voice 2	(4M)	965-0268-35		U21	960-5015-01
Voice 3	(4M)	965-0269-35		U36	960-5015-01
Voice 4	(4M)	965-0270-35		U37	960-5015-01
Sound	(512K)	965-0271-35		U7	960-7001-02
Display Controller Bd.:			**520-5055-03 (FCC FEB98)**		
Display	(4M)	965-0272-35	A2.01 | $C17D	ROM 0	960-5015-01

Lost In Space

ROM	Chip Size	Program Part Nº	USA Ver. & Check Sum	Bd. Loc.	Raw Part Nº
CPU / Sound Board:			**520-5136-16 (Mono FCC FEB98)**		
Game ROM	(1M)	965-0282-60	A1.01 | $B2FF	U210	960-5009-00
Voice 1	(4M)	965-0283-60		U17	960-5015-01
Voice 2	(4M)	965-0284-60		U21	960-5015-01
Voice 3	(4M)	965-0285-60		U36	960-5015-01
Voice 4	(4M)	965-0286-60		U37	960-5015-01
Sound	(512K)	965-0287-60		U7	960-7001-02
Display Controller Bd.:			**520-5055-03 (FCC FEB98)**		
Display	(4M)	965-0288-60	A1.02 | $32AB	ROM 0	960-5015-01

Godzilla

ROM	Chip Size	Program Part Nº	USA Ver. & Check Sum	Bd. Loc.	Raw Part Nº
CPU / Sound Board:			**520-5136-16 (Mono FCC FEB98)**		
Game ROM	(1M)	965-0289-40	A2.05| $B1FF	U210	960-5009-00
Voice 1	(4M)	965-0290-40		U17	960-5015-01
Voice 2	(4M)	965-0291-40		U21	960-5015-01
Voice 3	(4M)	965-0292-40		U36	960-5015-01
Voice 4	(4M)	965-0293-40		U37	960-5015-01
Sound	(512K)	965-0294-40		U7	960-7001-02
Display Controller Bd.:			**520-5055-03 (FCC FEB98)**		
Display	(4M)	965-0295-40	A2.00 | $C929	ROM 0	960-5015-01

South Park

Note: This game uses four (4) 8MB VOICE ROMS at U17, U21, U36 & U37 requiring a Jumper at Loc. W6. Refer to CPU/Snd. Bd. Schematic (2 of 3).

ROM	Chip Size	Program Part Nº	USA Ver. & Check Sum	Bd. Loc.	Raw Part Nº
CPU / Sound Board:			**520-5136-16 (Mono FCC FEB98)**		
Game ROM	(1M)	965-0301-71	A1.03 | $58FF	U210	960-5009-00
Voice 1	(8M)	965-0302-71		U17	960-5016-00
Voice 2	(8M)	965-0303-71		U21	960-5016-00
Voice 3	(8M)	965-0304-71		U36	960-5016-00
Voice 4	(8M)	965-0305-71		U37	960-5016-00
Sound	(512K)	965-0306-71		U7	960-7001-02
Display Controller Bd.:			**520-5055-03 (FCC FEB98)**		
Display	(4M)	965-0307-71	A1.01 | $166F	ROM 0	960-5015-01

Harley-Davidson®

Note: This game uses four (4) 8MB VOICE ROMS at U17, U21, U36 & U37 requiring a Jumper at Loc. W6. Refer to CPU/Snd. Bd. Schematic (2 of 3).

ROM	Chip Size	Program Part Nº	USA Ver. & Check Sum	Bd. Loc.	Raw Part Nº
CPU / Sound Board:			**520-5136-16 (Mono FCC FEB98)**		
Game ROM	(1M)	965-0319-67	A1.03 | $3EFF	U210	960-5009-00
Voice 1	(8M)	965-0322-67		U17	960-5016-00
Voice 2	(8M)	965-0323-67		U21	960-5016-00
Voice 3	(8M)	965-0324-67		U36	960-5016-00
Voice 4	(4M)	965-0325-67		U37	960-5015-01
Sound	(512K)	965-0320-67		U7	960-7001-02
Display Controller Bd.:			**520-5055-03 (FCC FEB98)**		
Display	(4M)	965-0321-67	A1.04 | $FC7C	ROM 0	960-5015-01

Striker Xtreme

Note: This game uses four (4) 8MB VOICE ROMS at U17, U21, U36 & U37 requiring a Jumper at Loc. W6. Refer to CPU/Snd. Bd. Schematic (2 of 3).

ROM	Chip Size	Program Part Nº	USA Ver. & Check Sum	Bd. Loc.	Raw Part Nº
CPU / Sound Board:			**520-5136-16 (Mono FCC FEB98)**		
Game ROM	(1M)	965-0326-68	A1.02 | $E4FF	U210	960-5009-00
Voice 1	(8M)	965-0329-68		U17	960-5016-00
Voice 2	(8M)	965-0330-68		U21	960-5016-00
Voice 3	(8M)	965-0331-68		U36	960-5016-00
Voice 4	(8M)	965-0332-68		U37	960-5016-00
Sound	(512K)	965-0327-68		U7	960-7001-02
Display Controller Bd.:			**520-5055-03 (FCC FEB98)**		
Display	(4M)	965-0328-68	A1.03 | $1957	ROM 0	960-5015-01

NFL

Note: This game uses four (4) 8MB VOICE ROMS at U17, U21, U36 & U37 requiring a Jumper at Loc. W6. Refer to CPU/Snd. Bd. Schematic (2 of 3).

ROM	Chip Size	Program Part Nº	USA Ver. & Check Sum	Bd. Loc.	Raw Part Nº
CPU / Sound Board:			**520-5136-16 (Mono FCC FEB98)**		
Game ROM	(1M)	965-0339-73	A1.00 | $D2FF	U210	960-5009-00
Voice 1	(8M)	965-0342-73		U17	960-5016-00
Voice 2	(8M)	965-0343-73		U21	960-5016-00
Voice 3	(8M)	965-0344-73		U36	960-5016-00
Voice 4	(8M)	965-0345-73		U37	960-5016-00
Sound	(512K)	965-0340-73		U7	960-7001-02
Display Controller Bd.:			**520-5055-03 (FCC FEB98)**		
Display	(4M)	965-0341-73	A1.01 | $845A	ROM 0	960-5015-01

Sharkey's Shootout

Note: This game uses three (3) 8MB VOICE ROMS at U17, U21 & U36 requiring a Jumper at Loc. W6. Refer to CPU/Snd. Bd. Schematic (2 of 3).

ROM	Chip Size	Program Part Nº	USA Ver. & Check Sum	Bd. Loc.	Raw Part Nº
CPU / Sound Board:			**520-5136-64 (Mono FCC FEB98 Rev. 8/00)**		
Game ROM	(1M)	965-0333-72	A2.04 | $5CFF	U210	960-5009-00
Voice 1	(8M)	965-0336-72		U17	960-5016-00
Voice 2	(8M)	965-0337-72		U21	960-5016-00
Voice 3	(8M)	965-0338-72		U36	960-5016-00
Sound	(512K)	965-0334-72		U7	960-7001-02
Display Controller Bd.:			**520-5055-03 (FCC FEB98)**		
Display	(4M)	965-0335-72	A2.01 | $6C33	ROM 0	960-5015-01

High Roller Casino

Note: This game uses four (4) 8MB VOICE ROMS at U17, U21, U36 & U37 requiring a Jumper at Loc. W6. Refer to CPU/Snd. Bd. Schematic (2 of 3).

ROM	Chip Size	Program Part Nº	USA Ver. & Check Sum	Bd. Loc.	Raw Part Nº
CPU / Sound Board:			**520-5136-16 (Mono FCC FEB98)**		
Game ROM	(1M)	965-0346-65	A | $	U210	960-5009-00
Voice 1	(8M)	965-0349-65		U17	960-5016-00
Voice 2	(8M)	965-0350-65	**GAME CODE**	U21	960-5016-00
Voice 3	(8M)	965-0350-65	**IN**	U36	960-5016-00
Voice 4	(8M)	965-0350-65	**PRODUCTION**	U37	960-5016-00
Sound	(512K)	965-0347-65		U7	960-7001-02
Display Controller Bd.:			**520-5055-03 (FCC FEB98)**		
Display	(4M)	965-00348-65	A | $	ROM 0	960-5015-01

Game Revisions can be updated after the Production Run. This Table is accurate as of the printing of this manual. If any changes occurred, the next game manual will include the updated information. The version stated is USA. If there is a question of as to the latest Code Revision & Check Sum call our Technical Support Department, 1-800-542-5377 or 1-708-345-7700 (Select Option 1). Visit our website www.SternPinball.com where code can be downloaded (an EPROM Burner is required).

APPENDIX B

Semi-Conductors / Integrated Circuits (I.C.) / Relays Cross-Reference Table

Table №	Type	Source Number	STERN™ PINBALL	N T E®	E C G®	Radio Shack®	R C A®
	RECTIFICATION, BLOCKING, DAMPENING DIODES AND/OR LIGHT EMITTING DIODES (LEDs)						
1	Diode	1N4001	112-5001-00	NTE552	ECG552	- — - — -	SK9000
	Diode	1N4004	112-5003-00	NTE116	ECG116	276-1103	SK3312
	Diode	1N5401	112-0056-00	NTE5801	ECG5801	276-1143	SK9004
	Diode	1N5404	112-5004-00	NTE5804	ECG5804	276-1144	SK9007
	Diode	T6A10L	112-5006-01	NTE5812	ECG5812	- — - — -	- — - — -
	Diode	FR302	112-5009-00	NTE588	ECG588	- — - — -	SK5014
	Diode, Signal	1N914	112-5014-00	- — - — -	- — - — -	- — - — -	- — - — -
	LED	**MT5000UR** or **TLRH180P** (T1-3/4 GaAlAs)	165-5052-00 *(old SPI Part №: 165-5100-00)*	- — - — -	- — - — -	276-066B	- — - — -
	ZENER DIODES						
2	Diode	1N4742A 12v	112-0061-00	NTE142A	ECG142A	276-563	SK12V
	Diode	1N4760B 68v	112-0062-00B	NTE5092A	ECG5092A	- — - — -	SK68V
	Diode	1N4764A 100v	112-0049-00A	NTE5096A	ECG5096A	- — - — -	SK100V
	Diode	1N5228 3.9v	112-0053-00	NTE5007A	ECG5007A	- — - — -	SK3A9
	Diode	1N5234B 6.2v	112-0047-00B	NTE5013A	ECG5013A	276-561	SK6A2
	Diode	1N5379 110v	112-0072-00	NTE5157	ECG5157	- — - — -	SK110X
	Diode	1N6267A 6.8v	112-5011-00	NTE4902	ECG4902	- — - — -	- — - — -
	Diode	1N4752A 33v	112-5010-00A	NTE147A	ECG147A	- — - — -	SK33V
	Diode	1N4736 6.8v 1w	112-5007-00	NTE5071A	ECG5071A	- — - — -	- — - — -
	TRANSISTORS - TYPE FET, NPN, PNP AND/OR SCR						
3	FET Trans.	STP20N10L	110-0106-00	NTE2987	ECG2987	- — - — -	- — - — -
	FET Trans.	STP19N06L	110-0088-00	NTE2985	ECG2985	- — - — -	- — - — -
	FET Trans.	VN02N	110-0089-00	- — - — -	- — - — -	- — - — -	- — - — -
	NPN Trans.	2N4401	110-0073-00	NTE85	ECG85	276-2009	SK3124A
	NPN Trans.	2N6427	110-0070-00	NTE48	ECG48	- — - — -	SK4906
	NPN Trans.	MJE340	110-0071-00	NTE157	ECG157	- — - — -	SK3747
	NPN Trans.	MPSA42	110-0082-00	NTE287	ECG287	- — - — -	SK3232
	NPN Trans.	2N3904	110-0069-00	NTE123AP	ECG123AP	276-2009	- — - — -
	NPN Trans.	TIP122	110-0067-00	NTE261	ECG261	276-2068	SK3896
	NPN Trans.	MJE15030	110-0101-00	NTE375	ECG375	- — - — -	SK9118
	PNP Trans.	2N5401	110-0078-00	NTE288	ECG288	- — - — -	SK3434
	PNP Trans.	MJE15031	110-0103-00	NTE292	ECG292	- — - — -	SK3441
	PNP Trans.	MJE350	110-0072-00	NTE374	ECG374	- — - — -	SK9042
	PNP Trans.	MPSA92	110-0100-00	NTE288	ECG278	- — - — -	SK3434
	PNP Trans.	TIP42	110-0068-00	NTE332	ECG332	- — - — -	SK9236
	PNP Trans.	TIP32C	110-0081-00	NTE292	ECG292	- — - — -	SK3441
	PNP Trans.	TIP36C	110-0077-00	NTE393	ECG393	- — - — -	SK3961
	SCR Trans.	2N5060	110-0074-00	NTE5400	ECG5400	276-1067	SK3950
	SCR Trans.	SCR2800B	110-0083-00	NTE5461-8	ECG5461-8	- — - — -	- — - — -
	BRIDGE RECTIFIERS (BR)			**Comments:**			
4	BR (Present)	DB3501 or CM3501	112-5000-00	For White Star I/O Bds., BR = 35 Amp @ 100v P.I.V.			
	RELAYS			**Comments:**			
5	Relay	FRL-264 D024/02CK	190-5002-00	For PPB, Power Supply, & White Star I/O Boards, Relay = 24v DC 10 Amp DPDT			
	Relay	FRL-264 D006/04CV	190-5001-00	For CPU Boards, Relay = 6v DC 5 Amp 4 Pole DT			

APPENDIX C

Game Mfg. Date, Manual Part Nº & CPU Jumper Table†

Game Name	Game Mfg. Date and Manual PNº	CPU Ver.	EPROM Position	Jumpers Installed (†see Note)	Jumpers Removed (†see Note)
1. Laser War	MAY 87 780-5001-00	1 2	5C 5B, 5C	J4 J6a J7a J4 J5a J6a	J5 J6 J7b J5 J5b J6b
2. Secret Service	MAR 88 780-5002-00	2	5B, 5C	J4	J5
3. Torpedo Alley	AUG 88 780-5003-00	2	5B, 5C	J4	J5
4. Time Machine	DEC 88 780-5004-00	2	5B, 5C	J4	J5
5. Playboy 35th Anniversary	MAY 89 780-5005-00	2	5B, 5C	J4	J5
6. ABC Monday Night Football	SEP 89 780-5007-00	2	5B, 5C	J4	J5
7. Robocop	NOV 89 780-5006-00	2	5B, 5C	J4	J5
8. Phantom of the Opera	JAN 90 780-5008-00	2	5B, 5C	J4	J5
9. Back to the Future	JUN 90 780-5009-00	3	5B, 5C	J4	J5
10. The Simpsons	SEP 90 780-5012-00	3	5B, 5C	J4	J5
11. Checkpoint	FEB 91 780-5010-00	3	5B, 5C	J4	J5
12. Teenage Mutant Ninja Turtles	MAY 91 780-5017-00	3	5B, 5C	J4	J5
13. Batman	JUL 91 780-5011-00	3	5B, 5C	J4	J5
14. Star Trek 25th Anniversary	OCT 91 780-5014-00	3	5C	J5	J4
15. Hook	JAN 92 780-5019-00	3	5C	J5	J4
16. Lethal Weapon 3	JUN 92 780-5026-00	3	5C	J5	J4
17. Star Wars	OCT 92 780-5024-00	3	5C	J5	J4
18. Rocky & Bull-winkle & Friends	FEB 93 780-5022-00	3	5C	J5	J4
19. Jurassic Park	APR 93 780-5020-00	3	5C	J5	J4
20. Last Action Hero	AUG 93 780-5027-00	3	5C	J5	J4
21. Tales from the Crypt	NOV 93 780-5018-00	3	5C	J5	J4
22. The Who's Tommy	FEB 94 780-5028-00	3	5C	J5	J4
23. WWF Royal Rumble	MAY 94 780-5023-00	3	5C	J5	J4
24. Guns-N'-Roses	JUL 94 780-5029-00	3	5C	J5	J4
25. Maverick	SEP 94 780-5031-00	3	5C	J5	J4
26. Mary Shelley's Frankenstein	DEC 94 780-5036-00	3	5C	J5	J4
27. Baywatch	MAR 95 780-5033-00	3	5C	J5	J4
28. Batman Forever	JUL 95 780-5038-00	3	5C	J5	J4

Game Name	Game Mfg. Date and Manual PNº	CPU Ver.	EPROM Position	Jumpers Installed	Jumpers Removed
29. Apollo 13 (A13)	NOV 95 780-5044-00	—	U210	n / a	n / a
30. Golden Eye	FEB 96 780-5042-00	—	U210	n / a	n / a
31. Twister	APR 96 780-5041-00	—	U210	n / a	n / a
32. ID4: Inde-pendence Day	JUL 96 780-5045-00	—	U210	n / a	n / a
33. Space Jam	OCT 96 780-5043-00	—	U210	n / a	n / a
34. The Star Wars Trilogy - S.E.	FEB 97 780-5056-00	—	U210	n / a	n / a
35. The Lost World: J.P.	JUN 97 780-5053-00	—	U210	n / a	n / a
36. The X-Files	AUG 97 780-5046-00	—	U210	n / a	n / a
37. Starship Troopers	NOV 97 780-5059-00	—	U210	n / a	n / a
38. Viper Night Drivin'	FEB 98 780-5035-00	—	U210	n / a	n / a
39. Lost In Space	JUN 98 780-5060-00	—	U210	n / a	n / a
40. Godzilla	SEP 98 780-5040-00	—	U210	n / a	n / a
41. South Park	JAN 99 780-5071-00	—	U17 U21 U36 U37	W6 CPU/Snd.	n / a
42. Harley-Davidson®	AUG 99 780-5067-01	—	U17 U21 U36 U37	W6 CPU/Snd.	n / a
43a. Striker Xtreme	MAR 00 780-5068-01	—	U17 U21 U36 U37	W6 CPU/Snd.	n/a
43b. NFL	OCT 00 780-5073-00	—	U17 U21 U36 U37	W6 CPU/Snd.	n/a
44. Sharkey's Shootout	OCT 00 780-5072-01	—	U17 U21 U36	W6 CPU/Snd.	n/a
45. High Roller Casino	JAN 01 780-5065-00	—	U17 U21 U36 U37	W6 CPU/Snd.	n/a

† Additional Information for Installed / Removed Jumpers (List 1-28 only):

Board Combinations with **ROM** at Location **5C** (Game 1, Ver1) **Installed** J1b, J3, J4, J6a, **J7a** & J8 **Removed** J1a, J2, J5, **J6** & **J7b**

Board Combinations w/ **ROM** at Locations **5B**, **5C** (Game 1, Ver2) **Installed** J1b, J3, J4, **J5a, J6a, J7b** & J8 **Removed** J1a, J2, J5, **J5b, J6b,** & **J7a**

Board Combinations w/ **ROM** at Locations **5B**, **5C** (Games 2-12, Ver2/3) **Installed** J1b, J3, **J4**, **J5b**, **J6b,** J7b & J8 **Removed** J1a, J2, **J5, J5a, J6a** & J7a

Board Combinations with **ROM** at Locations **5C** (Games 14-28, Ver3) **Installed** J1b, J3, **J5,** J5b, J6b, J7b & J8 **Removed** J1a, J2, **J4,** J5a, J6a & J7a

* Version 1 has a 2K RAM which is a 24-pin IC in Position 5D; Versions 2 & 3 have a 8K RAM which is a 28-PIN IC in Position 5D.

APPENDIX D

Board Type Table

Game Name	Flipper	Sound	Power Supply	Display X-Digit
Laser War	2-Flipper **Board Not Required**	***initial:*** 520-5002-00 ***replaced with:*** 520-5002-02 *520-5002-01 was not used.*	520-5000-00	Master: 520-5004-00 plus: 520-5005-00 (Qty. 2): 7 Digit Alpha/Numeric 520-5006-00 (Qty. 2): 7 Digit Numeric 520-5007-00 (Qty. 1): 4 Digit Numeric
Secret Service	3-Flipper **Board Not Required**	520-5002-02	520-5000-00	520-5014-01 7 Digit Alpha/Numeric Combined
Torpedo Alley	3-Flipper **Board Not Required**	520-5002-02	520-5000-00	520-5014-01 7 Digit Alpha/Numeric Combined
Time Machine	2-Flipper **Board Not Required**	520-5002-02	520-5000-00	520-5014-01 7 Digit Alpha/Numeric Combined
Playboy 35th Anniversary	520-5033-00 2-Flipper (for 100 games)	520-5002-02	520-5000-00	520-5014-01 7 Digit Alpha/Numeric Combined
ABC Monday Night Football	520-5033-00 2-Flipper (for 100 games)	520-5002-02	520-5000-00	520-5030-00 16 Digit Alpha/Numeric Combined
Robocop	520-5033-00 2-Flipper	520-5002-02	520-5000-00	520-5030-00 16 Digit Alpha/Numeric Combined
Phantom of the Opera	520-5033-00 2-Flipper	520-5002-02	520-5000-00	520-5030-00 16 Digit Alpha/Numeric Combined
Back to the Future	520-5033-00 2-Flipper	520-5002-02	520-5000-00	520-5030-00 16 Digit Alpha/Numeric Combined
The Simpsons	520-5033-00 2-Flipper	520-5002-03	520-5000-00	520-5030-00 16 Digit Alpha/Numeric Combined

Game Name	Flipper	Sound	Power Supply	Dot Matrix Display	Display Controller	OPTO Transmitter	OPTO Receiver	OPTO Application
Checkpoint	520-5033-00 2-Flipper	520-5002-03	520-5047-00	520-5042-00 128 X 16				
Teenage Mutant Ninja Turtles	520-5033-00 2-Flipper	520-5002-03	520-5047-00	520-5042-00 128 X 16				
Batman	520-5033-00 2-Flipper	520-5050-01	520-5047-00	520-5042-00 128 X 16				
Star Trek 25th Anniversary	520-5033-00 2-Flipper	520-5050-01	520-5047-00	520-5042-00 128 X 16				
Hook	520-5033-00 2-Flipper	520-5050-01	520-5047-00	520-5042-00 128 X 16				
Lethal Weapon 3	520-5033-00 2-Flipper	520-5050-01	520-5047-01	520-5052-00 128 X 32	520-5055-00			
Star Wars	520-5033-00 2-Flipper	520-5050-02	520-5047-01	520-5052-00 128 X 32	520-5055-00			
Rocky & Bull-winkle & Friends	520-5033-00 2-Flipper	520-5050-02	520-5047-01	520-5052-00 128 X 32	520-5055-00			
Jurassic Park	520-5076-00 3-Flipper	520-5050-02	520-5047-02	520-5052-00 128 X 32	520-5055-00			
Last Action Hero	520-5070-00 2-Flipper	520-5050-03	520-5047-02	520-5052-00 128 X 32	520-5055-00			
Tales from the Crypt	520-5076-00 3-Flipper	520-5050-03	520-5047-02	520-5052-00 128 X 32	520-5055-01			
The Who's Tommy	520-5076-00 3-Flipper	520-5077-00	520-5047-02	520-5052-00 128 X 32	520-5055-01			
WWF Royal Rumble	**520-5070 / 5080 -00** 4-Flipper (2X2)	520-5077-00	520-5047-02	520-5052-00 128 X 32	520-5055-01			
Guns N' Roses	520-5076-00 3-Flipper	520-5077-00	520-5047-02	520-5052-00 128 X 32	520-5055-01			
Maverick	520-5076-00 3-Flipper	520-5050-03	520-5047-03	520-5075-00 192 X 64	520-5092-01	520-5102-00 Single OPTO	520-5103-00 Single OPTO	Paddle Boat Wheel Enter
Mary Shelley's Frankenstein	520-5076-00 3-Flipper	520-5077-00	520-5047-03	520-5075-00 192 X 64	520-5092-01			
Baywatch	**520-5070 / 5080 -00** 4-Flipper (2X2)	520-5126-02	520-5047-03	520-5075-00 192 X 64	520-5092-01	520-5124-00 Single OPTO	520-5125-00 Single OPTO	5-Ball Trough over Up-Kicker
Batman Forever	520-5076-00 3-Flipper	520-5126-02	520-5047-03	520-5075-00 192 X 64	520-5092-01	520-5124-00 Single OPTO	520-5125-00 Single OPTO	4-Ball Trough over Up-Kicker

Miscellaneous Boards (Lamp Boards & Relay Boards) not listed above can be found in each individual game manual.

GAMES HEREON USE THE WHITE STAR BOARD SYSTEM™ *(with the addition of the I/O Power Driver Board):*

Game Name	Flipper	I/O Power Driver	CPU/Sound Stereo	Disp. Power Supply	Dot Matrix Display	Display Controller	OPTO Transmitter	OPTO Receiver	OPTO Application
Apollo 13	520-5080-00 2-Flipper	520-5137-00	520-5136-00	520-5138-00	520-5052-00 128 X 32	520-5055-01	520-5124-00 Single OPTO	520-5125-00 Single OPTO	5-Ball Trough over Up-Kicker
	Miscellaneous PC Boards:	Light Boards 520-5130-01, -04 & -05 Magnet Interface, 7-Segment Display & Light Bd. 520-5130-06 Magnet Driver Board 520-5130-02 Switch Membrane Board 520-5130-03				Relay Board 520-5010-00			
Golden Eye	520-5080-00 2-Flipper	520-5137-00	520-5136-00	520-5138-00	520-5052-00 128 X 32	520-5055-01	520-5124-00 Single OPTO	520-5125-00 Single OPTO	5-Ball Trough over Up-Kicker
	Miscellaneous PC Boards:	Light Boards 520-5128-05 through -08		Mag. Processor X2 Driver Bd. 520-5143-00		Relay Board 520-5010-00			

Table continued on the next page.

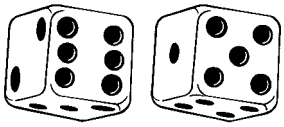

APPENDIX D

Board Type Table

GAMES HEREON USE THE WHITE STAR BOARD SYSTEM™ *(with the deletion of the Flipper Board):*

Game Name	I/O Power Driver	CPU/Sound Mono	Disp. Power Supply	Dot Matrix Display	Display Controller	OPTO Transmitter	OPTO Receiver	OPTO Application	Misc OPTO & App.
Twister	520-5137-01	520-5136-10	520-5138-00	520-5052-00 128 X 32	520-5055-01	520-5124-00 Single OPTO	520-5125-00 Single OPTO	5-Ball Trough over Up-Kicker	
	Miscellaneous PC Boards:	Light Boards 520-5145-01 through -07		Mag. Drv. Bd. 520-5143-00	Relay Board 520-5010-00				
Independence Day (ID4)	520-5137-01	520-5136-10	520-5138-00	520-5052-00 128 X 32	520-5055-01	520-5124-00 Single OPTO	520-5125-00 Single OPTO	4-Ball Trough over Up-Kicker	
	Miscellaneous PC Boards:	Light Boards 520-5149-01 through -10		Servo Mtr. Bd. 520-5152-00		520-5082-00 Long Hop OPTO	520-5083-00 Long Hop OPTO	Alien Head Enter	
Space Jam	520-5137-01	520-5136-10	520-5138-00	520-5052-00 128 X 32	520-5055-01	520-5124-00 Single OPTO	520-5125-00 Single OPTO	5-Ball Trough over Up-Kicker	
	Miscellaneous PC Boards:	2X 7-Segment Display Board 520-5153-00							
The Star Wars Trilolgy - Special Ed.	520-5137-01	520-5136-10	520-5138-00	520-5052-00 128 X 32	520-5055-01	520-5124-00 Single OPTO	520-5125-00 Single OPTO	4-Ball Trough over Up-Kicker	
	Miscellaneous PC Boards:	Relay Board 520-5010-00							
The Lost World: J.P.	520-5137-01	520-5136-10	520-5138-00	520-5052-00 128 X 32	520-5055-01	520-5124-00 Single OPTO	520-5125-00 Single OPTO	4-Ball Trough over Up-Kicker	520-5162-00 2-Pos. Motor Sensor on Snagger Motor
	Miscellaneous PC Boards:	DC Relay Bd. 520-5066-00	Shaker Mtr. Bd. 520-5065-00						
The X-Files	520-5137-01	520-5136-10	520-5138-00	520-5052-00 128 X 32	520-5055-01	520-5124-00 Single OPTO	520-5125-00 Single OPTO	4-Ball Trough over Up-Kicker	520-5155-00 3-Pos. Motor Sensor on File Cab. Motor
	Miscellaneous PC Boards:					520-5082-00 Long Hop OPTO	520-5083-00 Long Hop OPTO	File Cabinet Enter	
Starship Troopers	520-5137-01	520-5136-15	520-5138-00	520-5052-00 128 X 32	520-5055-02	520-5124-00 Single OPTO	520-5125-00 Single OPTO	4-Ball Trough over Up-Kicker	
	Miscellaneous PC Boards:	4X 7-Segment Display Board 520-5166-00				520-5082-00 Long Hop OPTO	520-5083-01 Long Hop OPTO	L/R Orbit Lane Enter	
Viper Night Drivin'	520-5137-01	520-5136-16	520-5138-00	520-5052-00 128 X 32	520-5055-03	520-5124-00 Single OPTO	520-5125-00 Single OPTO	4-Ball Trough over Up-Kicker	
	Miscellaneous PC Boards:	Relay Board 520-5010-00				520-5082-00 Long Hop OPTO	520-5083-01 Long Hop OPTO	Jump Ramp	
Lost In Space	520-5137-01	520-5136-16	520-5138-00	520-5052-00 128 X 32	520-5055-03	520-5173-00 Dual OPTO	520-5174-00 Dual OPTO	4-Ball Trough over Up-Kicker	
	Miscellaneous PC Boards:	Relay Board 520-5010-00							
Godzilla	520-5137-01	520-5136-16	520-5138-00	520-5052-00 128 X 32	520-5055-03	520-5173-00 Dual OPTO	520-5174-00 Dual OPTO	4-Ball Trough over Up-Kicker	
	Miscellaneous PC Boards:	Shaker Mtr. Bd. 520-5065-00							
South Park	520-5137-01	520-5136-16	520-5138-00	520-5052-00 128 X 32	520-5055-03	520-5173-00 Dual OPTO	520-5174-00 Dual OPTO	5-Ball Trough over Up-Kicker	
	Miscellaneous PC Boards:					520-5082-00 Long Hop OPTO	520-5083-01 Long Hop OPTO	Kenny Under Trough Enter	
Harley-Davidson®	520-5137-01	520-5136-16	520-5138-00	520-5052-00 128 X 32	520-5055-03	520-5173-00 Dual OPTO	520-5174-00 Dual OPTO	4-Ball Trough over Up-Kicker	
	Miscellaneous PC Boards:	Relay Board 520-5010-00	Shaker Mtr. Bd. /520-5065-00	Diode Board 520-5146-00		520-5082-00 Long Hop OPTO	520-5083-01 Long Hop OPTO	Motorcycle Enter	
Striker Xtreme (NFL)	520-5137-01	520-5136-16	520-5138-00	520-5052-00 128 X 32	520-5055-03	520-5173-00 Dual OPTO	520-5174-00 Dual OPTO	4-Ball Trough over Up-Kicker	520-5155-00 3-Pos. Motor Sensor on Goalie Motor
	Miscellaneous PC Boards:	DC Relay Bd. 520-5066-00	Relay Board 520-5010-00	Diode Board 520-5146-00	for **UK ONLY> Sol-enoid Expander Bd. 520-5192-00**	520-5082-00 Long Hop OPTO	520-5083-01 Long Hop OPTO	Goalie Under-Trough Enter	
Sharkey's Shootout	520-5137-64	520-5136-64	520-5138-00	520-5052-00 128 X 32	520-5055-03	520-5173-00 Dual OPTO	520-5174-00 Dual OPTO	4-Ball Trough over Up-Kicker	520-5194-00 4-Pos. Motor Sensor on ?-Ball Motor
	Miscellaneous PC Boards:	Relay Board 520-5010-00	Sol. Exp. Bd. 520-5192-00						
High Roller Casino	520-5137-01	520-5136-16	520-5138-00	520-5052-00 128 X 32	520-5055-03	520-5173-00 Dual OPTO	520-5174-00 Dual OPTO	4-Ball Trough over Up-Kicker	520-5194-00 4-Pos. Motor Sensor on Roulette Wheel Motor
	Miscellaneous PC Boards:	Dot Display (5X7) in Slot 520-5197-00	**UK Only:** Sol. Exp. Bd. 520-5192-00			520-5082-00 Long Hop OPTO	520-5083-01 Long Hop OPTO	Ball Lock Under Roulette	
						520-5196-00 3-Pos. OPTO	520-5195-00 3-Pos. OPTO	Up/Dn Ramp in Slot Mach.	

† ***N o t e :*** To order Game Specific CPU/Sound Board please specify Game Name.

APPENDIX E

Generic Coil Cross-Reference Guide † ‡

STANDARD COILS						FLIPPER COILS			
GA-TURNS	Res. (Ω)	SPI PART Nº	GA-TURNS	Res. (Ω)	SPI PART Nº	GAUGE-TURNS	Res. (Ω)	COLOR	SPI PART Nº
20-400	1.0 Ω	090-5021-00	**24-940 †**	5.5 Ω	090-5036-00T	**21-900 †**	*not available*	RED	090-5020-10T
22-500	1.7 Ω	090-5017-00			090-5036-00B	**22-750**/30-2600 ‡	2.6 / 92.0 Ω	N/A	090-5011-00
22-600	2.2 Ω	090-5023-00	**25-1240**	9.3 Ω	090-5034-00	**22-900 †**	3.4 Ω	YEL	090-5020-20T
23-700	3.1 Ω	090-5022-00	**26-1200 †**	10.3 Ω	090-5044-00T	**22-1080 †**	4.3 Ω	YEL/GRN	090-5032-00T
23-750	3.4 Ω	090-5019-00			090-5044-00B				090-5032-00B
23-800 †	3.6 Ω	090-5001-00T	**27-1300**	14.2 Ω	090-5003-00	**23-620**/30-2600 ‡	2.4 / 75.0 Ω	N/A	090-5006-00
		090-5001-00B	**27-1400**	14.7 Ω	090-5015-00	**23-700**/30-2600 ‡	3.0 / 83.5 Ω	N/A	090-5013-00
23-840	4.0 Ω	090-5005-00	**27-1500**	16.3 Ω	090-5004-00T	**23-800**/30-2600 ‡	2.8 / 90.5 Ω	N/A	090-5012-00
23-1200	7.1 Ω	090-5008-00			090-5004-00B	**23-900**	3.8 Ω	GRN	090-5020-30
23½-765	3.6 Ω	090-5037-03	**28-1050**	11.5 Ω	090-5046-00	**23-1100**	5.1 Ω	ORG	090-5030-00
24-900	5.0 Ω	090-5002-00	**29-2000**	33.6 Ω	090-5016-00	**24-1570**	9.5 Ω	N/A	090-5025-00
						25-1800	13.8 Ω	BLU/GRN	090-5041-00

NOTE: Ohm values may vary +/- .03 Ω depending on meter calibration.

† Coil Part Nºs ending with a "T" signifies the Diode is on the top of the lug; ...ending with a "B" signifies the Diode is on the bottom of the lug.
‡ These coils are dual-wound. ***Also Note:*** All Coil Part Nºs listed ***Do Not Include*** Coil Sleeves (must be ordered separately).

MAGNET COILS w/12" leads			TRIP COILS (Miniature)						LUGLESS COILS	
GA-TURNS	Res. (Ω)	SPI PART Nº	GA-TURNS	Res. (Ω)	SPI PART Nº	GA-TURNS	Res. (Ω)	SPI PART Nº	GA-TURNS	Res. (Ω)
22-650	4.3 Ω	090-5042-01	**29-1000**	15.2 Ω	090-5059-00	**33-1590**	59 Ω	515-6916-00	SPI PART Nº	
24-780	8 Ω	090-5061-00	**31-1500**	52.0 W	090-5054-00	**32-1250**	35 Ω	515-6916-**01**	**23-800**	3.6 Ω
			32-1800	50.2 Ω	090-5031-00	Note: 33-1590 WHT & 32-1250 YEL			090-5053-00	

Flipper Coil Table ‡ ††

GAME NAME	Nº of Flippers	LOWER FLIPPERS SPI Nº / GAUGE-TURNS / Color		UPPER FLIPPERS SPI Nº / GAUGE-TURNS / Color	
		LEFT	RIGHT	LEFT	RIGHT
Laser War ‡	2	090-5011-00 **22-750 / 30-2600**	SAME	Not Used	Not Used
Secret Service ‡	3	090-5006-00 **23-620 / 30-2600**	SAME	Not Used	090-5006-00 **23-620 / 30-2600**
Torpedo Alley ‡	3	090-5011-00 **22-750 / 30-2600**	090-5013-00 **23-700 / 30-2600**	Not Used	090-5012-00 **23-800 / 30-2600**
Time Machine ‡	2	090-5011-00 **22-750 / 30-2600**	SAME	Not Used	Not Used
‡ These coils are dual-wound.					
Playboy 35th Anniversary ††	2	090-5020-02 **22-900 -YEL-**	SAME	Not Used	Not Used
ABC Monday Night Football ††	2	090-5020-02 **22-900 -YEL-**	SAME	Not Used	Not Used
†† A very small % of these games used a 090-5020-20 coil which used a proto-type Solid State Flipper System. The two types of coils both are 22-900 coils; the only difference being the addition of the 1N5404 Diode on the (-02) coils which was used in the Deger Design.					
Robocop	2	090-5020-20 **22-900 -YEL-**	SAME	Not Used	Not Used
Phantom of the Opera	2	090-5020-20 **22-900 -YEL-**	SAME	Not Used	Not Used
Back to the Future	2	090-5020-20 **22-900 -YEL-**	SAME	Not Used	Not Used
The Simpsons	2	090-5020-20 **22-900 -YEL-**	SAME	Not Used	Not Used
Checkpoint	2	090-5020-20 **22-900 -YEL-**	SAME	Not Used	Not Used
Teenage Mutant Ninja Turtles	2	090-5020-30 **23-900 -GRN-**	SAME	Not Used	Not Used
Batman	2	090-5020-30 **23-900 -GRN-**	SAME	Not Used	Not Used
Star Trek 25th Anniversary	2	090-5020-30 **23-900 -GRN-**	SAME	Not Used	Not Used
Hook	2	090-5030-00 **23-1100 -ORG-**	090-5020-30 **23-900 -GRN-**	Not Used	Not Used
Lethal Weapon 3	2	090-5030-00 **23-1100 -ORG-**	SAME	Not Used	Not Used

Table continued on the next page.

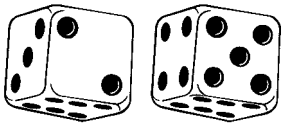

APPENDIX E

Flipper Coil Table †

GAME NAME	№ of Flippers	LOWER FLIPPERS SPI № / GAUGE-TURNS / Color		UPPER FLIPPERS SPI № / GAUGE-TURNS / Color	
		LEFT	RIGHT	LEFT	RIGHT
Star Wars	2	090-5032-00 **22-1080 -YEL-GRN-**	SAME	Not Used	Not Used
Rocky & Bullwinkle & Friends	2	090-5020-30 **23-900 -GRN-**	SAME	Not Used	Not Used
Jurassic Park	3	090-5020-30 **23-900 -GRN-**	SAME	Not Used	090-5030-00 **23-1100 -ORG-**
Last Action Hero	2	090-5020-30 **23-900 -GRN-**	SAME	Not Used	Not Used
Tales from the Crypt	3	090-5032-00 **22-1080 -YEL-GRN-**	SAME	Not Used	090-5041-00 **25-1800 -BLU-GRN-**
The Who's Tommy	3	090-5020-30 **23-900 -GRN-**	SAME	090-5041-00 **25-1800 -BLU-GRN-**	Not Used
WWF Royal Rumble	4	090-5032-00 **22-1080 -YEL-GRN-**	SAME	090-5041-00 **25-1800 -BLU-GRN-**	SAME
Guns N' Roses	3	090-5032-00 **22-1080 -YEL-GRN-**	SAME	090-5030-00 **23-1100 -ORG-**	Not Used
Maverick	3	090-5032-00 **22-1080 -YEL-GRN-**	SAME	Not Used	090-5032-00 **22-1080 -YEL-GRN-**
Mary Shelley's Frankenstein	3	090-5030-00 **23-1100 -ORG-**	SAME	Not Used	090-5030-00 **23-1100 -ORG-**
Baywatch	4	090-5030-00 **23-1100 -ORG-**	090-5020-30 **23-900 -GRN-**	090-5025-00 **24-1570 -N/A-**	090-5030-00 **23-1100 -ORG-**
Batman Forever	3	090-5032-00 **22-1080 -YEL-GRN-**	090-5020-20 **22-900 -YEL-**	Not Used	090-5020-30 **23-900 -GRN-**
Apollo 13	2	090-5032-00 **22-1080 -YEL-GRN-**	SAME	Not Used	Not Used
Golden Eye	2	090-5032-00 **22-1080 -YEL-GRN-**	SAME	Not Used	Not Used
Twister	2	090-5020-20 **22-900 -YEL-**	090-5032-00 **22-1080 -YEL-GRN-**	Not Used	Not Used
ID4: Independence Day	3	090-5032-00 **22-1080 -YEL-GRN-**	SAME	Not Used	090-5020-30 **23-900 -GRN-**
Space Jam †	2	090-5032-00T **22-1080 -YEL-GRN-**	090-5020-20T **22-900 -YEL-**	Not Used	Not Used
The Star Wars Trilogy - Special Edition †	2	090-5032-00T **22-1080 -YEL-GRN-**	SAME	Not Used	Not Used
The Lost World: Jurassic Park †	2	090-5032-00T **22-1080 -YEL-GRN-**	SAME	Not Used	Not Used
The X-Files †	2	090-5032-00T **22-1080 -YEL-GRN-**	SAME	Not Used	Not Used
Starship Troopers †	3	090-5030-00T **23-1100 -ORG-**	SAME	Not Used	090-5032-00T **22-1080 -YEL-GRN-**
Viper Night Drivin' †	2	090-5030-00T **23-1100 -ORG-**	SAME	Not Used	Not Used
Lost In Space †	2	090-5030-00T **23-1100 -ORG-**	090-5032-00T **22-1080 -YEL-GRN-**	Not Used	Not Used
Godzilla †	2	090-5032-00T **22-1080 -YEL-GRN-**	SAME	Not Used	Not Used
South Park †	2	090-5030-00T **23-1100 -ORG-**	SAME	Not Used	Not Used
Harley-Davidson® †	2	090-5032-00T **22-1080 -YEL-GRN-**	090-5030-00T **23-1100 -ORG-**	Not Used	Not Used
Striker Xtreme (NFL) †	3	090-5032-00T **22-1080 -YEL-GRN-**	090-5030-00T **23-1100 -ORG-**	090-5030-00T **23-1100 -ORG-**	Not Used
Sharkey's Shootout †	3	090-5030-00T **23-1100 -ORG-**	090-5030-00T **23-1100 -ORG-**	090-5030-00T **23-1100 -ORG-**	Not Used
High Roller Casino †	2	090-5020-20T **22-900 -YEL-**	090-5032-00T **23-1080 -YEL-GRN-**	Not Used	Not Used

† Coil Part Nºs ending with a "T" signifies the Diode is on the top of the lug (on the coil-winding side);
Coil Part Nºs ending with a "B" signifies the Diode is on the bottom of the lugs.

APPENDIX F

Motor Specification Table

The following table only list games that used motors.

Game Name	Function	Specifications	Part №
ABC Monday Night Football	Goal Post Up/Down Movement	Motor 24v A.C. 60 RPM CW	515-5222-00
Phantom of the Opera	Organ Up/Down Movement	Bowman Motor 24v 60Hz 3W 11 RPM CCW	515-5256-00
Checkpoint	Mag Wheel (in Backbox)	Motor D.C. (KEN)	041-5005-00
	Shaker	Johnson Motor (Vibrator)	041-5002-00
Teenage Mutant Ninja Turtles	Spinning Pizza Ball Deflector	Gear Motor 24v A.C. 325 RPM CW	515-5397-00
Batman	Bar Target Up/Down Movement	Bowman Motor 24v 60Hz 3W 11 RPM CCW	515-5256-00
Star Trek 25th Anniversary	Swinging Target	Bowman Motor 24v 22½ RPM	515-5534-00
	Transporter F/X	Gear Motor 24v A.C. 3½ RPM	500-5421-00
	Cooling Fan (for Transporter F/X)	4½" Motor 12v	041-5014-00
Lethal Weapon 3	Spinning Light	Motor 2½ v A.C. 4000 RPM CCW	041-5017-00
Star Wars	Bar Target Up/Down Movement	Bowman Motor 24v 60hz 3W 11 RPM CCW	515-5256-00
	R2D2 Robot Left/Right Movement	Bowman Motor 24v A.C. 22½ RPM CW	515-5571-00
	Death Star Rotation	Bowman "G" Motor 24v A.C. 60Hz 6 RPM CW	515-5570-00
Rocky & Bullwinkle & Friends	Nell Log "Cutting Blade" Forward/Back Movement	Autotrol Model E Motor 24v 60hz 4W 3 RPM CCW	041-5023-00
Jurassic Park	T-Rex Left/Right Movement	Multi Motor 5v D.C.	041-5025-00
	T-Rex Up/Down Movement	Bowman Motor 24v 11 RPM CW	041-5026-00
	Shaker	Johnson Motor (Vibrator)	041-5002-00
Last Action Hero	Crane Left/Right Movement	Multi Products Motor 12v D.C. #3312 OSC	041-5027-00
	Shaker	Johnson Motor (Vibrator) 10.5v D.C. 10 AMP 2950 RPM CW	041-5029-00
Tales from the Crypt	Tombstone Up/Down Movement	Bowman Motor 24v A.C. 6 RPM CCW	515-5900-00
	Shaker	Johnson Motor (Vibrator) 10.5v D.C. 10 AMP 2950 RPM CW	041-5029-00
The Who's Tommy	Mirror Up/Down Movement	Bowman Motor 24v A.C. 6 RPM CCW	515-5900-00
	Flipper Blinders	Servo Motor (94102)	041-5032-00
	Spinning Airplane Propellers	Motor D.C.	041-5033-00
WWF Royal Rumble	Shaker	Johnson Motor (Vibrator) 10.5v D.C. 10 AMP 2950 RPM CW	041-5029-00
Maverick, The Movie	Turning Paddle Wheel	Motor 24v A.C. 10 RPM	041-5036-00
Mary Shelley's Frankenstein	Creature Head Left/Right Movement	Servo Motor (94102)	041-5032-00
Batman Forever	Cannon Left/Right Movement	Bowman Motor 24v A.C. 60Hz 3W 6 RPM CCW	515-6383-00
Apollo 13	Rocket Up/Down Movement	Bowman Motor 24v A.C. 60Hz 3W 6 RPM CCW	515-6383-00
	Moon Unit Rotational Orbit	Multi Products Motor 24v A.C. 50/60Hz 3W 6 RPM CCW	515-6487-00
	Shaker	Johnson Motor (Vibrator) 10.5v D.C. 10 AMP 2950 RPM CW	041-5029-00
Golden Eye	Satellite Left/Right Movement	Bowman Motor 24v A.C. 60Hz 3W 6 RPM CW	515-6528-00

Table continued on the next page.

APPENDIX F

Motor Specification Table

The following table only list games that used motors.

Game Name	Function	Specifications	Part №
Twister	Spinning Disc with Magnet	Multi Products Motor 24v A.C. 50/60Hz 3W 325 RPM CCW	515-6347-00
	Backbox Fan (Tornado Wind)	Multi Products Motor 24v A.C. 50/60Hz 3W 3600 RPM CW	515-6531-00
ID4: Independence Day	Alien Head Open/Close Movement	Servo Motor (94322)	041-5045-00
The Star Wars Trilogy - S.E.	X-Wing Left/Right Movement	Bowman Motor 24v A.C. 60Hz 3W 10 RPM CCW	515-6383-01
The Lost World: J.P.	Snagger & Center Link Lift Up/Down Movement	Multi Products Motor 20v D.C. 9 RPM Non-Directional	515-6715-03
	Shaker	Johnson Motor (Vibrator) 10.5v D.C. 10 AMP 2950 RPM CW	041-5029-00
The X-Files	X-File Cabinet Lift Up/Down Movement	Multi Products Motor 20v D.C. 9 RPM CCW	041-5057-00
Starship Troopers	Warrior Bug Forward/Reverse Movement	Haydon Switch & Instrument, Inc. Stepper Motor, Series 36000: 1.4"ø (Non-Captive Shaft not incl.) HSI #36864-12 (Unipolar) / Travel per Step = .004 Step Angle = 15° / 12v D.C. / 4.6W	515-6794-00
Lost In Space	Spinning Disc with Magnet	Multi Products Motor 24v A.C. 50/60Hz 3W 325 RPM CCW	515-6347-00
Godzilla	Shaker	Johnson Motor (Vibrator) 10.5v D.C. 10 AMP 2950 RPM CW ‡	041-5029**-01**
Harley-Davidson®	Shaker	Johnson Motor (Vibrator) 10.5v D.C. 10 AMP 2950 RPM CW ‡	041-5029**-01**
	Motorcycle Lift Up/Down Movement	Autotrol 24v A.C. 20 RPM CCW	041-5072-01
Striker Xtreme (NFL)	Goalie (Linebacker) Left to Right Movement	Multi #3590 12v D.C. 60 RPM	041-5075-00
Sharkey's Shootout	Mystery Ball Rotating Movement	Hankscraft Model-E 24v A.C. 50/60Hz 3W 20 RPM CW	041-5076-00
High Roller Casino	Roulette Wheel Rotating Movement	Multi Products Motor 20V D.C. CCW	041-5078-00
	Up/Dn. Ramp in Slot Mach. Lift Up/Down Movement	Haydon Switch & Instrument, Inc. Stepper Motor, Series 36000: 1.4"ø (Non-Captive Shaft not incl.) HSI #36864-12 (Unipolar) / Travel per Step = .004 Step Angle = 15° / 12v D.C. / 4.6W	515-6794-00

No motors were used on the following games: Laser War, Secret Service, Torpedo Alley, Time Machine, Playboy 35th Anniversary, Robocop, Back to the Future, The Simpsons, Hook, Guns N' Roses, Baywatch, Space Jam, Viper Night Drivin', South Park.

*‡ **Please Note:** "-01" Shaker Motor is **Not Compatible** with old Shaker Motor 041-5029**-00** (Shaker Motor Assy. 515-5893-00). THIS NEW MOTOR CAN ONLY BE USED IN NEW SHAKER MOTOR ASSY. 515-5893**-01**.*

APPENDIX G

Part Number Prefix Classification Codes

I. Electrical Source, Energy & Signal Converters
- 010- Transformers
- 031- Speakers
- 090- Solenoids (Coils)

II. Conductors, Connectors & Insulators
- 034- Line Cords
- 036- Cable and Harness Assemblies
- 041- Motors
- 045- Connectors (All Types)
- 077- Lamp Sockets

III. Circuits & Circuit Elements
- 100- ICs
- 110- Transistors
- 112- Diodes
- 121- Resistors
- 123- Resistors (Variable & Adjustable)
- 124- Regulators & Bridge Rectifiers
- 125- CAPS
- 140- Crystals
- 165- Light Bulbs
- 180- Switches
- 190- Relays

IV. Bolts, Screws, Nuts & Washers
- 231- Bolts
- 232- Screws (Pan Head)
- 234- Screws (HWH)
- 237- Screws (Misc.)
- 240- Nuts (Misc.)
- 242- Washers (Flat, Round)
- 244- Washers (Split Lock)
- 246- Washers (Lockers, External Tooth)

V. Mechanical Components
- 249- Rivets
- 251- Pins (Dowel)
- 254- Stand-Offs, Spacers and Shims
- 260- Steel Ball
- 265- Springs (Extension)
- 266- Springs (Compression)
- 269- Springs (Washers - Belleville, Wave)
- 280- Grommets and Bushing

VI. Handles, Locks, Catches & Latches, Keys & Hinges
- 355- Handles, Locks, Catches & Latches and Keys
- 390- Hinges

VII. Fabricated Parts (In-House Assemblies)
- 500- End Product (Systems and Models)
- 515- Sub-Assemblies
- 520- Printed Circuit Boards (PCBs)
- 522- Display Glass
- 525- Wood Parts
- 530- Screw Machined Parts
- 535- Fabricated Parts
- 545- Molded (Extruded) Plastic/Rubber Parts
- 550- Molded (Inserts)

VIII. Bulk Materials
- 600- Braided Ground Wire
- 601- Stranded Wire
- 602- Ribbon Cable
- 605- Sleeving (Shrink Tubing)
- 626- Foam Rubber

IX. Miscellaneous
- 705- Packing & Shipping Items
- 820- Decals and Labels (Sets & Misc.)
- 830- Butyrate (Plastic Pieces)
- 900- Game Posters
- 960- EPROM (Raw Part)
- 965- EPROM (Programmed Part)

APPENDIX H

Playfield Inserts (Plastic Light Covers)

Patterns: STARBURST STIPPLE	STARBURST CIRCULAR ⅝" ø 550-5000-XX	STARBURST CIRCULAR ¾" ø 550-5001-XX	STARBURST CIRCULAR 1" ø 550-5002-XX	STARBURST CIRCULAR 1-3/16" ø 550-5003-XX	STARBURST CIRCULAR 1-½" ø 550-5004-XX
STARBURST CIRCULAR 2-¼" ø 550-5005-XX	STARBURST CIRCULAR 2-¾" ø 550-5006-XX	PLAIN CIRCULAR ¾" ø 550-5007-XX	PLAIN CIRCULAR 1" ø 550-5008-XX	PLAIN CIRCULAR 1-3/16" ø 550-5009-XX	PLAIN CIRCULAR 1-½" ø 550-5010-XX
PLAIN CIRCULAR 2-¼" ø 550-5011-XX	PLAIN CIRCULAR 2-¾" ø 550-5012-XX	STIPPLE CIRCULAR 1" ø 550-5048-XX	STIPPLE 1" SQUARE 1²" 550-5019-XX	ROLLOVER BUTTON BASE 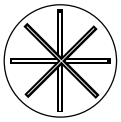 550-5026-XX	WHITE STAR *(only in white)* 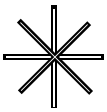 545-5015-00
STIPPLE RECTANGULAR 1-½" X ¾" 550-5018-XX	STIPPLE RECTANGULAR 1-¼" X 1-½" 550-5051-XX	STARBURST RECTANGULAR 2-¼" X 1-⅛" 550-5044-XX	PLAIN RECTANGULAR 2-¼" X 1-⅛" 550-5049-XX	PLAIN RECTANGULAR 1-¼" X 1-½" 550-5050-XX	PLAIN RECTANGULAR 2" X 2-½" 550-5063-XX
STARBURST MINI SHIELD 1" X 1" 550-5024-XX	STARBURST LARGE SHIELD 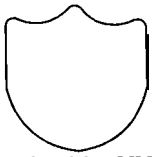 550-5025-XX	MINI HOT DOG 1-5/8" 550-5020-XX	BEVEL HOT DOG 3-½" 550-5021-XX	PLAIN HOT DOG 3-½" 550-5022-XX	BANANA 550-5023-XX
STARBURST ARROW-SMALL 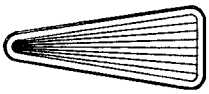 550-5013-XX	STARBURST ARROW-LARGE 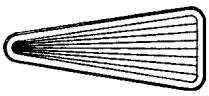 550-5070-XX	STARBURST ARROW-HEAD SMALL 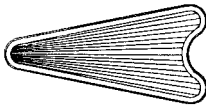 550-5014-XX	STARBURST ARROW-HEAD LARGE 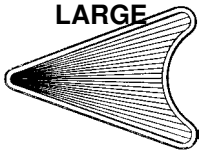 550-5015-XX	STARBURST BULLET 550-5016-XX	STARBURST TRIANGLE 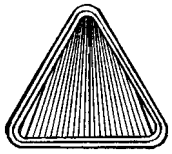 550-5017-XX

Note: The shapes and sizes shown above are not to scale. Some shapes may no longer be available in every color.

Instructions: Parts which may come in various colors (i.e. targets, some posts, playfield inserts, etc.) end in a 2-digit Nº which correspond to the color of that part. The "-XX" in Part Nºs which may come in various colors should be replaced with the desired 2-Digit Nº. corresponding to the color desired. *Not all colors may be available.*

PLASTIC PART COLOR CHART

Nº	Color	Nº	Color	Nº	Color	Nº	Color	Nº	Color	Nº	Color
-00	**Black** or Solid Clear	-03	Amber	-06	Yellow	-09	Purple	-12	Fluor. Blue	-15	Luminescent
-01	Clear	-04	Green	-07	Orange	-10	Fluor. Orange	-13	Teal Green	-16	Gold
-02	Red	-05	Blue	-08	White	-11	Fluor. Green	-14	Gray	-17	Trans. Brown

APPENDIX I

Stand-Up Targets

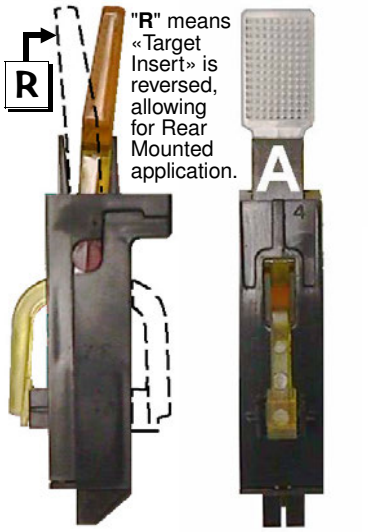

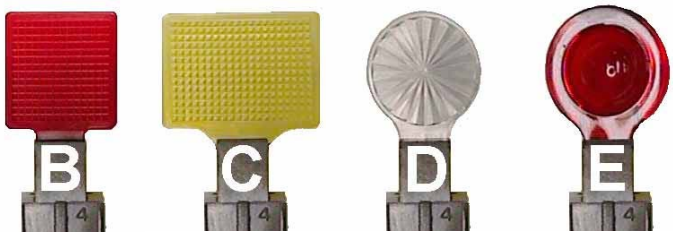

PLASTIC PART COLOR CHART	
Nº	Color
-00	Black
-01	Clear
-02	Red
-03	Amber
-04	Green
-05	Blue
-06	Yellow
-07	Orange
-08	White
-09	Purple
-10	Fluor. Orange
-11	Fluor. Green
-12	Fluor. Blue
-13	Teal Green
-14	Gray
-15	Luminescent
-16	Gold

Take Note:

1. For **Items A-E**, for the Target Assembly use the **"500-"** SPI Nº; For the Target Assy. with Rear Mount add **"R"** to **"500-"** SPI Nº; For just the «Target Insert» use the **"545-"** SPI Nº.
2. **Items A-E** come in various colors. *These targets may not be available in every color.* The **"-XX"** in should be replaced with the desired 2-Digit Nº for the color desired described in the Chart ↗.
   As of date of print, the following colors were used for Items A-E:
   -01 Clear **(A, D); -02** Red **(A, B, C, D, E); -03** Amber **(D, E); -04** Green **(A, B); -05** Blue **(C); -06** Yellow **(A, C), -09** Purple **(B, D); -11** Fluorescent Green **(A, B, D).**
3. See Section 3, Chapter 2, Go To Diagnostics Menu, for switches used corresponding to the Switch Matrix Grid of this game.

Nº	STAND-UP TARGET NAME	SPI PART Nº	Nº	STAND-UP TARGET NAME	SPI PART Nº
A	Modular Stand-Up Target Narrow Assy.	500-6138-XX	D	Modular Stand-Up Target Round Assy.	500-6075-XX
	Stand-Up Target Narrow (Insert)	545-6138-XX		Stand-Up Target Round (Insert)	545-6075-XX
B	Modular Stand-Up Target Square Assy.	500-6139-XX	E	Mod. Stand-Up Target 1" Spherical Assy.	500-6189-XX
	Stand-Up Target Square (Insert)	545-6139-XX		Stand-Up Target 1" Spherical (Insert)	545-6189-XX
C	Modular Stand-Up Target Rectangle Assy.	500-6228-XX			
	Stand-Up Target Rectangle (Insert)	545-6228-XX			

NOTE: To receive the Target Assy. with the « Target Insert » « Reversed » simply add a **"R"** at the end of the Part Nº. See Side View picture above to compare (dashed line shows target reversed).

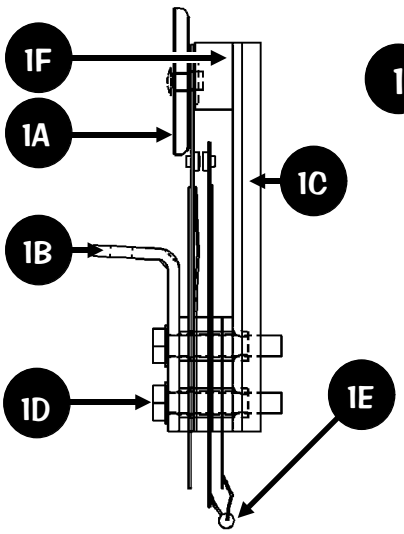

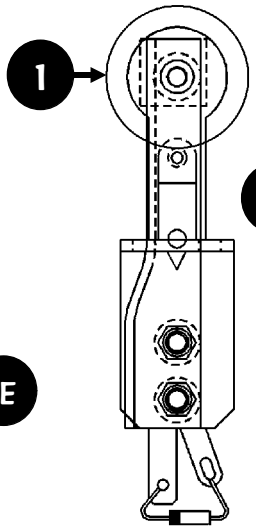

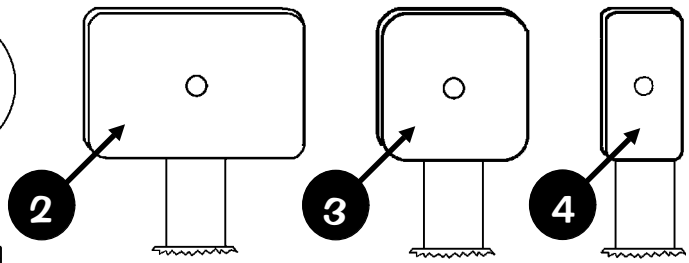

Take Note:

1. For Items 1-4, "single" components can be ordered.
2. Items 1-4 come in various colors. *These targets may not be available in every color.* The "-XX" in Part Nºs should be replaced with the desired 2-Digit Nº for the color desired described in the above Chart.
3. For switches used corresponding to the Switch Matrix Grid of this game, see Sec. 3, Chp. 2, ...Diagnostics.

Nº	STAND-UP (FLAT) TARGET NAME	SPI PART Nº
1	1" Round Stand-Up Target Assy.	500-5835-XX
ORDERING ABOVE (ITEM 1) ASSY. PART Nº WILL INCLUDE:		
1A‡	Switch & Target Assy. 1" Round	515-5966-XX
1B	Mounting Bracket	535-6896-00
1C	Switch Back Plate	535-6452-00
1D	6-32 X ¾ HWH Swage (Qty. 2)	237-5976-05
1E	Switch Diode, 1N4001	112-5001-00
1F	Foam Pad	626-5029-00

‡ ***Note:*** Item **1A**, is a riveted Sub-Assy. which includes the following items for reference: **A1**— Stack Switch Radius End (180-5133-00), **A2**— Washer 5/16" (242-5017-00), **A3**— Rivet 1/8" ø X 3/16" (249-5001-00) **and A4**— 1" Round Target (545-5456-XX).

2	1" X 1½" Stand-Up Rect. Target Assy.	500-5321-XX
ORDERING ABOVE (ITEM 2) ASSY. PART Nº WILL INCLUDE:		
2A‡	Sw. & Target Assy. 1" X 1½" Rect. Items 2B-F are identical to 1B-F	515-6027-XX Same as 1B-F

Item 2 Table Note continued in the next column.

Nº	STAND-UP (FLAT) TARGET NAME	SPI PART Nº

‡ ***Note:*** Item **2A**, is a riveted Sub-Assy. which includes the following items for reference: **A1**— Stack Switch Radius End (180-5133-00), **A2**— Washer 5/16" (242-5017-00), **A3**— Rivet 1/8" ø X 3/16" (249-5001-00) **and A4**— Rectangular Target (545-5145-XX).

3	1" Sq. Stand-Up Target Assy.	500-5232-XX
ORDERING ABOVE (ITEM 3) ASSY. PART Nº WILL INCLUDE:		
3A‡	Sw. & Target Assy. 1" Square Items 3B-F are identical to 1B-F	515-5162-XX Same as 1B-F

‡ ***Note:*** Item **3A**, is a riveted Sub-Assy. which includes the following items for reference: **A1**— Stack Switch Radius End (180-5133-00), **A2**— Washer 5/16" (242-5017-00), **A3**— Rivet 1/8" ø X 3/16" (249-5001-00) **and A4**— 1" Square Target (545-5470-XX).

4	Narrow Stand-Up Target Assy.	500-5857-XX
ORDERING ABOVE (ITEM 4) ASSY. PART Nº WILL INCLUDE:		
4A‡	Sw. & Target Assy. Narrow Items 4B-F are identical to 1B-F	515-5967-XX Same as 1B-F

‡ ***Note:*** Item **4A**, is a riveted Sub-Assy. which includes the following items for reference: **A1**— Stack Switch Square End (180-5132-00), **A2**— Washer 5/16" (242-5017-00), **A3**— Rivet 1/8" ø X 3/16" (249-5001-00) **and A4**— Narrow Target (545-5210-XX).

GLOSSARY OF TERMS

A Followed after a number means "Amp." or Ampage in an expression relating to an electrical object. (e.g. 8**A**).

AC (Acronym) **A**lternating **C**urrent.

Adj. (Abbreviation) Adjustment(s).

Assy. (Abbreviation) Assembly.

Au. (Abbreviation) Audit(s).

Bd. (Abbreviation) Board.

BOT (Abbreviation) Bottom.

Brkt. (Abbreviation) Bracket.

Bridge Rectifier A configuration of a diode that allows current to flow in one direction producing both positive and negative pulsating DC Voltages.

Color Coding See Appendix H or I, Plastic Part Color Chart or Section 4, Chapter 1, Playfield - Plastic Posts & Spacers.

Combination (Combo) [Shot] Any variable pinball shot(s) made successively.

Conn. (Abbreviation) Connector.

CMOS Short for COSMOS (Complementary Symmetry M.O.S.); Complementary Metal-Oxide Semi-Conductor.

CN (Abbreviation) Connector (e.g. **CN**5-P3).

CT (Abbreviation) Center.

DC (Abbreviation) Direct Current.

DT (Abbreviation) Drop Target(s).

DOTS (Acronym) **D**iode **O**n **T**erminal **S**trip.

EB (Abbreviation) Extra Ball.

Eject Playfield surface device to kick ball back into play; Saucer.

EPROM (Acronym) **E**rasable **P**rogrammable **R**ead **O**nly **M**emory. Can be erased using UV Light and re-programmed.

e.g. (Abbreviation) Latin- Exempli gratia. For Example.

EOS (Acronym) **E**nd-**O**f-**S**troke (i.e. Switch for flipper).

F (Abbreviation) Fuse (i.e. F23).

GA-Turn Gauge & Turn describing the windings on a coil (e.g. 23-800, 23 is the gauge of wire and 800 is the amount of windings.

G.I. (Abbreviation) General Illumination (Lamps).

HWH (Abbreviation) Hex Washer Head.

IC (Acronym) **I**ntegrated **C**ircuit (As in after 24-Pin IC).

ID or I.D. (Acronym) **I**nside **D**imension.

i.e. (Abbreviation) Latin- Id est. That is.

IO or I/O (Abbreviation) Input / Output (e.g. I/O Power Driver Bd.)

LT, Lt. or L. (Abbreviation) Left.

Laser Kick A coil/plunger used above the playfield to kick pinball back into play.

LED (Acronym) **L**ight **E**mitting **D**iode.

Loop [Shot] Continuously up a ramp and back to the flipper.

Lwr. (Abbreviation) Lower.

Orbit [Shot] From the left or right flipper around the back rail of the playfield back to the flipper.

MB (Abbreviation) Magnet Board.

M-BALL or MBALL (Abbreviation) Multiball™ More than 1 ball in game play.

MID (Abbreviation) Middle

Non-Reflexive See Reflexive.

No. or Nº or # (Abbreviation) Number

NPF (Acronym) **N**o **P**roblem **F**ound.

N.C. or NC (Abbreviation) Normally Closed.

N.O. or NO (Abbreviation) Normally Open.

NS (Abbreviation) Not Stuffed. (Use in Part Listings, Sec. 5)

OD or O.D. (Abbreviation) Outside Dimension.

P (Abbreviation) Pin (e.g. CN5-**P**3).

PCB (Acronym) **P**rinted **C**ircuit **B**oard

P/F (Abbreviation) Playfield.

PIA LED (Acronym) **P**eripheral **I**nterface **A**dapter **L**ight **E**mitting **D**iode.. This is a diagnostic LED on the CPU; it should not be lit during normal operation of a pinball game.

Plumb Bob Tilt Weight on Tilt Assembly.

PPH (Abbreviation) Phillips Pan Head.

Pop(s) Another term for Turbo Bumper(s).

PPB (Acronym) Playfield Power Board ("Popcorn-Popping Bd.").

PREV (Abbreviation) Previous.

PSB (Abbreviation) Power Supply Board

RAM (Acronym) **R**andom **A**ccess **M**emory. RAM **can** store input instructions and supply output information.

Reflexive/Non-Reflexive **Reflexive**—Solenoid Drive Transistor is enabled directly by a switch closure on the (Relating to CPU Boards) solenoid assembly (Ver. 1/2).
Non-Reflexive—Solenoid Drive Transistor is enabled by the CPU after reading a switch closure in the Switch Matrix (Ver. 3). Also note: All CPU Boards are backwards compatible (e.g. Jurassic Park/Ver. 3 to Time Machine/ Ver. 2). Swapping a Ver. 2 Board to a Ver. 3 is not possible due to the special solenoids section (i.e. Slingshots, Turbo Bumpers, etc.) changing from ***REFLEXIVE*** to ***NON-REFLEXIVE*** on Ver. 3 Boards.

Relay An automatic switch operated by current in a coil.

ROM (Acronym) **R**ead **O**nly **M**emory. ROM **cannot** store input instructions but can supply output information. ROM can be programmed only once.

RMA (Abbreviation) Return Merchandise Authorization Number

RT, Rt. or R. (Abbreviation) Right; ("**R**" at the end of Target Assy. Part Nº signifies Target Insert is **R**eversed.)

RO (Abbreviation) Rollover (switches).

Saucer See Eject.

Scoop A hole into the playfield. A metal scoop is in place to guide the ball into the kick-back under the playfield.

Slam Tilt A switch which closes when the game is slammed into or the Coin Door is slammed shut. Depending on adjustable settings, will cancel game in play when the number of closures required is achieved.

SMB (Abbreviation) Shaker Motor Board.

Solenoid A coil used for Electro Magnetic devices such as relays, flippers, slingshots, etc.

SSFB (Abbreviation) Solid State Flipper Board.

STEP Refers to the service switches on the coin door.

Sub-Assy. (Abbreviation) Sub-Assembly.

S-U or S/U (Abbreviation) Stand-Up (targets).

TM (Abbreviation) Trademark

Transfer [Shot] Maneuvering the ball in play from one flipper to the other. With flipper in the up position and the ball cradled by that flipper one would activate the flipper button in a quick repetitive manner to bounce the ball to the other side. Skilled players can rebound the ball off the slingshot.

Tri-Ball Three balls in play.

TTL (Abbreviation) Transistor-Transistor Logic

Upr. (Abbreviation) Upper.

V or v (Abbreviation) Volt(s).

Ver. (Abbreviation) Version.

VUK (Acronym) **V**ertical **U**p-**K**icker (Super or Standard).

X (Abbreviation) "Times" A multiplier; also used in dimensions.

X-Ball An undetermined number of ball(s) during game play.

Zener Diode A semi-conductor diode used for voltage regulation. Application depends on reverse break-down voltage.

"-00B" "B" at the end of Coil Part Numbers signifies that the diode is attached to the bottom of the lug.

"-00T" "T" at the end of Coil Part Numbers signifies that the diode is attached to the top of the lug (the side nearest the coil-winding).

Parts Order Checklist Notes

Date Ordered	Part №	Qty.	Description	Date Received

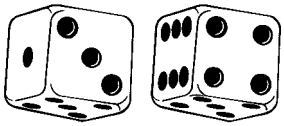

STERN PINBALL, INC. LIMITED WARRANTY

STERN PINBALL, INC., ("SELLER") WARRANTS ONLY TO THE INITIAL PURCHASER OF ITS PRODUCTS THAT THE ITEMS LISTED BELOW ARE FREE FROM DEFECTS IN MATERIAL AND WORKMANSHIP UNDER NORMAL USE AND SERVICE FOR THE WARRANTY PERIOD SPECIFIED:

PRINTED CIRCUIT BOARDS (GAME LOGIC):	2 MONTHS
DOT MATRIX DISPLAY BOARDS:	9 MONTHS

NO OTHER PARTS OF SELLER'S PRODUCT ARE WARRANTED.

WARRANTY PERIODS ARE EFFECTIVE FROM THE INITIAL DATE OF SHIPMENT FROM SELLER TO ITS AUTHORIZED DISTRIBUTORS.

SELLER'S SOLE LIABILITY SHALL BE, AT ITS OPTION, TO REPAIR OR REPLACE PRODUCTS WHICH ARE RETURNED TO SELLER DURING THE WARRANTY PERIODS SPECIFIED, PROVIDED:

1. SELLER IS NOTIFIED PROMPTLY UPON DISCOVERY BY PURCHASER THAT STATED PRODUCTS ARE DEFECTIVE.
2. SUCH PRODUCTS ARE PROPERLY PACKAGED AND THEN RETURNED FREIGHT PREPAID, TO SELLER'S PLANT.

THIS WARRANTY DOES NOT APPLY TO ANY PARTS DAMAGED DURING SHIPMENT AND/OR DUE TO IMPROPER HANDLING, OR DUE TO IMPROPER INSTALLATION OR USAGE, OR ALTERATION. IN NO EVENT SHALL THE SELLER BE LIABLE FOR ANY ANTICIPATED PROFITS, LOSS OF PROFITS, LOSS OF USE, ACCIDENTAL OR CONSEQUENTIAL DAMAGES OR ANY OTHER LOSSES INCURRED BY THE CUSTOMER IN CONNECTION WITH THE PURCHASE OF A STERN PINBALL, INC. PRODUCT.

WARRANTY DISCLAIMER

EXCEPT AS SPECIFICALLY PROVIDED IN A WRITTEN CONTRACT BETWEEN SELLER AND PURCHASER, THERE ARE NO OTHER WARRANTIES, EXPRESS OR IMPLIED, INCLUDING ANY IMPLIED WARRANTIES OF MERCHANTABILITY OR FITNESS FOR A PARTICULAR PURPOSE.

CAUTIONS, WARNINGS & NOTICES

Caution

FOR SAFETY AND RELIABILITY, SUBSTITUTE PARTS AND EQUIPMENT MODIFICATIONS ARE NOT RECOMMENDED (AND MAY VOID ANY WARRANTIES). USE OF NON-STERN PINBALL INC. PARTS OR MODIFICATIONS OF GAME CIRCUITRY, MAY ADVERSELY AFFECT GAME PLAY, OR MAY CAUSE INJURIES. TRANSPORT PINBALL GAMES WITH HINGED BACKBOX IN THE DOWN POSITION ONLY! ALWAYS TAKE GREAT CARE WHEN SERVICING ANY GAME. ALWAYS READ THE SERVICE MANUAL BEFORE REPLACING OR SERVICING COMPONENTS. SUBSTITUTIONS OF PARTS OR EQUIPMENT MODIFICATIONS MAY VOID FCC TYPE ACCEPTANCE.

Always Disconnect The Line Voltage Before Servicing. Some Parts May Still Hold Current When Unplugged.

Warning

THIS EQUIPMENT GENERATES, USES, AND CAN RADIATE RADIO FREQUENCY ENERGY, AND IF NOT INSTALLED AND USED IN ACCORDANCE WITH THE INSTRUCTIONS MANUAL, MAY CAUSE INTERFERENCE TO RADIO COMMUNICATIONS. IT HAS BEEN TESTED AND FOUND TO COMPLY WITH THE LIMITS FOR A CLASS A COMPUTING DEVICE PURSUANT TO SUBPART J OF PART 15 OF FCC RULES, WHICH ARE DESIGNED TO PROVIDE REASONABLE PROTECTION AGAINST SUCH INTERFERENCE WHEN OPERATED IN A COMMERCIAL ENVIRONMENT. OPERATION OF THIS EQUIPMENT IN A RESIDENTIAL AREA IS LIKELY TO CAUSE INTERFERENCE IN WHICH CASE THE USER AT HIS OWN EXPENSE WILL BE REQUIRED TO TAKE WHATEVER MEASURES MAY BE REQUIRED TO CORRECT THE INTERFERENCE.

RF INTERFERENCE NOTICE, CABLE HARNESS PLACEMENTS AND GROUND STRAP ROUTING ON THIS GAME HAVE BEEN DESIGNED TO KEEP RF RADIATION AND CONDUCTION WITHIN LEVELS ACCEPTED BY THE FCC RULES. TO MAINTAIN THESE LEVELS, REPOSITION HARNESSES AND RECONNECT GROUND STRAPS TO THEIR ORIGINAL PLACEMENTS, IF THEY BECOME DISCONNECTED DURING MAINTENANCE.

Notices

THIS DOCUMENT AND THE DATA DISCLOSED HEREIN OR HEREWITH IS NOT TO BE REPRODUCED (EXCEPT WHERE NOTED), USED OR OTHERWISE DISCLOSED IN WHOLE OR IN PART TO ANYONE WITHOUT WRITTEN CONSENT OF STERN PINBALL, INC.. **WARNING:** PRODUCTS IN THIS MANUAL, THE COMPANY NAME AND DEVICES AND THE DESIGN OF THE MANUAL ITSELF, ARE PROTECTED BY FEDERAL PATENTS (AND PATENTS PENDING), DESIGN REGISTRATIONS, TRADEMARKS AND COPYRIGHTS. ACTION WILL BE TAKEN IN THE EVENT OF INFRINGEMENT OR IMITATION. THE RIGHT IS RESERVED TO CHANGE SPECIFICATIONS WITHOUT PRIOR NOTICE.

High Roller Casino Pinball, ©2001 Manufactured by Stern™ Pinball, Inc. Portals, Icon Designs, logos, names, characters, & all related indicia are trademarks of Stern™ Pinball, Inc.® ©2001. All Rights Reserved.

"Multiball" is a registered trademark of Williams Electronics Games, Inc. Used by permission.

PCB Schematics (Section 5, Chapter 4) by CES (Creative Electronics & Software, Inc.) © 1995.

▼ U.S. ▼
Customary
9" Ruler

Metric Conversion

1/16" 1/8" 1/4" 1/2" 3/4"
.0625" .125" .25" .5" .75"
1/32" (.03125")

1" 2.54cm /25.4mm
1cm .3937"
1mm .03937"

For metric, multiply inch value by metric value, e.g. 5" X 2.54cm 12.7cm or 127mm.
For US, multiply metric value by inch value, e.g. 13cm X .3937" 5.1181"

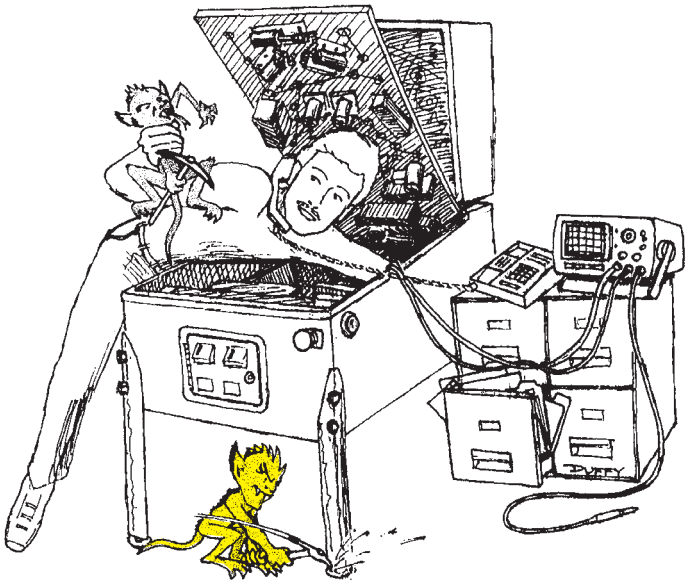

http://www.SternPinball.com

Visit our website for more current game information, Distribution Lists, Articles, Contact Information, and check out Technical Support & Part Sales for a whole lot more

HELP US HELP YOU IF YOU HAVE AN SUGGESTIONS, QUESTIONS, NEED TECHNICAL ADVICE, FIND ERRORS OR HAVE COMMENTS, CALL US TOLL-FREE (USA or CANADA)

1-800-KICKERS

Tel 708-345-7700 Fax 708-345-7889 eMail parts.service sternpinball.com

STERN PINBALL, INC.™
PARTS SALES & TECHNICAL SUPPORT

2020 Janice Avenue, Melrose Park, IL 60160

CE Games shipped factory direct to Europe from Stern Pinball, Inc. are CE approved and will have an E prefix attached to the Serial Number.

ALTHOUGH EVER EFFORT IS PUT INTO MAKING THIS MANUAL (AND ALL OTHER DOCUMENTS RELATING TO THIS PRODUCT) ACCURATE AND COMPLETE, PLA FIELD COMPONENTS, FEATURES, RULES, PROGRAMMING AND OPERATION ARE SUBJECT TO CHANGE WITH OR WITHOUT NOTICE.