Find-It-In-Front: Dr. Pinball Section

The inside cover & the front pages DR. ❶ thru DR. ❿ covers the basics...

Find the answers to your questions here...
If you still need help, give us a call!

STERN® PINBALL, INC.

DR. DR. DR.

NO YES END PREV QUIT ?

THIS PINBALL GAME IS TOPS™ TOURNAMENT PINBALL SYSTEM READY!

Order the optional TOPS™ Kit SPI PN: 502-5011-00

The Portals™ Service Menu, Section 3, is your Technical Friend...

© MMIII New Line Productions, Inc. All Rights Reserved. The Lord of the Rings, The Fellowship of the Ring, The Two Towers & The Return of the King and the names of the characters, items, events and places therein are trademarks of The Saul Zaentz Company d / b / a Tolkien Enterprises under license to New Line Productions, Inc., an AOL Time Warner Company.

Joe Blackwell
DIRECTOR,
Parts Sales &
Technical Support

Susan White
Parts
Sales
MANAGER

Patty Schraps
Parts
Stockroom
MANAGER

Your Parts Sales & Technical Support Team

Chas Siddiqi
Technical
Support
ENGINEER

Patrick Powers
Technical
Support
ENGINEER

J. Alfer
Technical Support
Documentation
ADMINISTRATOR

Please call us at 1-800-542-5377 or 1-708-345-7700 for Technical Support.

1-800-KICKERS

Visit us at our Web Site www.SternPinball.com.

Stern® Pinball, Inc.
All Rights Reserved. Printed in the U.S.A.
December 2003

SPI Part Number
780-5080-00

For Proper Operation of Pinball Game, four (4) Pinballs must be installed!

THE LORD OF THE RINGS

Diverter Gate Adjustment Procedure

This adjustment procedure is important. Unlike adjusting your flipper bats, adjusting the gate is done opposite. With the **Power Turned OFF** and the *Playfield raised, at rest against the Backbox, perform the following:*

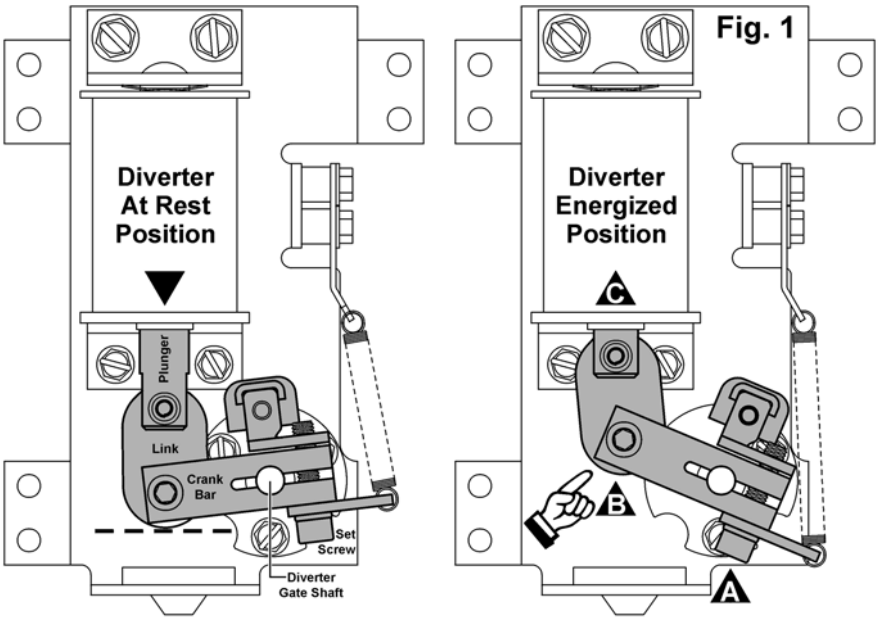

Fig. 1

Step 1: Under the Playfield, using a 5/32" Allen Wrench, loosen the Set-Screw on the Crank Bar *just enough so that the Diverter Paddle can move with a gentle amount of force.* **Ref. Fig. 1-A**.

Step 2: Above the Playfield, position the Diverter Paddle to the Right Side Flat Rail so they touch *(opening the gate to the Left Orthanc Tower)*. **Ref. Fig. 2**. With your finger, hold the gate in this position until *Step 3* is performed.

Step 3: Under the Playfield, push the Diverter Coil Plunger into the Coil Sleeve. **Reference Fig. 1-B**. With your finger, continue holding in the plunger and release the Diverter Gate (**Fig. 2**) to perform *Step 4*. If the Gate moves, refer to *Step 1* and retighten just enough to hold in position (**Fig. 2**).

Step 4: Tighten the Set-Screw on the Crank Bar. **Reference Fig. 1-A**.

Step 5: Check above the playfield to ensure the Diverter Paddle Gate in the "Rest Position" is as close to the Left Flat Rail as possible without touching it. **Reference Fig. 3.**

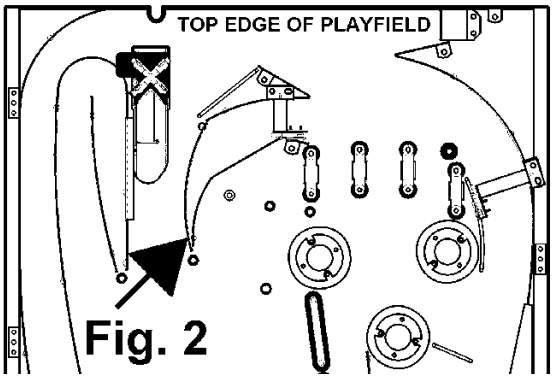

Fig. 2

*For parts, see the **Blue Pages**, Sec. **4**, Chp. **2**, Drawings ..., Page **80**.*

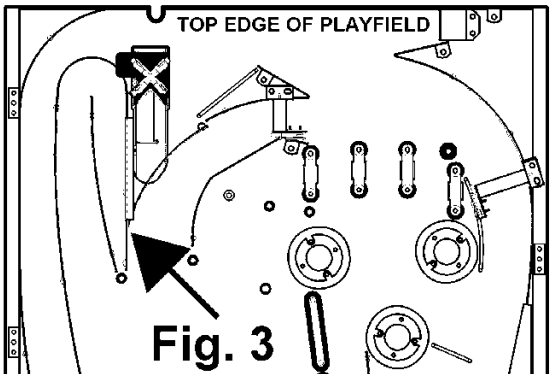

Fig. 3

Look over the TOURNAMENT MENU in Portals™!
*Read over Section **3**, Chapter **7**, Pages **53-57**.*

An Optional Tournament Kit is required for this ToPS™ Ready Pinball Game.
You can now easily set-up, start and end Tournaments for cash, tokens, tickets or points!

New to our Pinball Games?
Don't forget to go over **Section 3, Chapter 1, Portals™ Service Menu Introduction**. *If using Diagnostics...very useful!* Got confused? Comments? Questions? Call Technical Support at 800-542-5377 or 708-345-7700 (Option 1).

Backbox PCB Fuses, ROMs, Bridges, Relays, P/F & Cabinet Fuses, Cab. Switches

CAUTION: *For continued protection against risk of fire, replace only with same type of fuse having the same electrical rating!*

QUICK REFERENCE FUSE CHART

Backbox Fuses			
LOC: DISPLAY POWER SUPPLY (P.S.) BOARD			
F1	¾A 250v S.B.	90v DC	High Voltage Display
LOC: I / O POWER DRIVER BOARD			
F6	7A 250v S.B.	50v DC	Primary High Power Coils/Flippers
F7	5A 250v S.B.	20v DC	Low Power Coils
F8	5A 250v S.B.	12v DC	Logic Power
F9	5A 250v S.B.	12v DC	Logic Power
F20	**4A 250v S.B.**	50v DC	Magnet ◀◀◀ **THIS GAME ONLY**
F21	3A 250v S.B.	50v DC	Coils
F22	8A 250v S.B.	18v DC	Controlled Lamps
F23	4A 250v S.B.	5v DC	Logic
F24	5A 250v S.B.	6.3v AC	G.I. Lamps (BRN-WHT to WHT-BRN)
F25	5A 250v S.B.	6.3v AC	G.I. Lamps (YEL to WHT-YEL)
F26	5A 250v S.B.	6.3v AC	G.I. Lamps (GRN to WHT-GRN)
F27	5A 250v S.B.	6.3v AC	G.I. Lamps (VIO to WHT-VIO)
F28	3A 250v S.B.	24v AC	**Not Used / Spare**
Cabinet Fuses			
LOC: SERVICE (AC) OUTLET BOX (Cabinet Bottom)			
n/a	8A 250v S.B.	115v AC	Main Fuse Line (Domestic or USA)
n/a	5A 250v S.B.	220v AC	Main Fuse Line (International)
Playfield (P/F) Fuses			
LOC: UNDER PLAYFIELD (near Flippers)			
n/a	3A 250v S.B.	50v DC	Right Flipper (BLU-YEL⇆RED-YEL)
n/a	3A 250v S.B.	50v DC	Left Flipper (GRY-YEL⇆RED-YEL)
n/a	3A 250v S.B.	50v DC	Loop Diverter (GRY-YEL⇆YEL-VIO)

*For locations & more information on fuses, see Sec. **5**, Chapter **2**.*

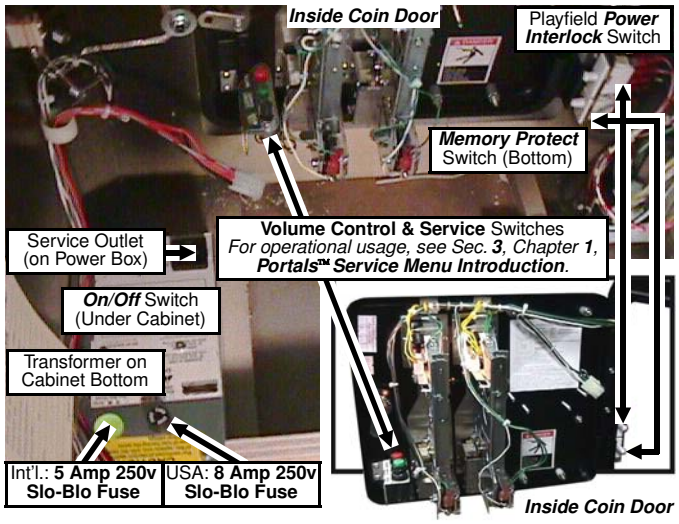

ROM TYPE on BD	LOCATION	SIZE	PART NUMBER
CPU Sound	U7	512K	965-0401-80
CPU Game	U210	1 MB	965-0402-80
CPU Voice ROM 1	U17	8 MB	965-0403-80
CPU Voice ROM 2	U21	8 MB	965-0404-80
CPU Voice ROM 3	U36	8 MB	965-0405-80
CPU Voice ROM 4	U37	8 MB	965-0406-80
DISPLAY Controller	U5	4 MB	965-0407-80

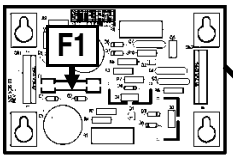

◀ Display Power Supply Bd.

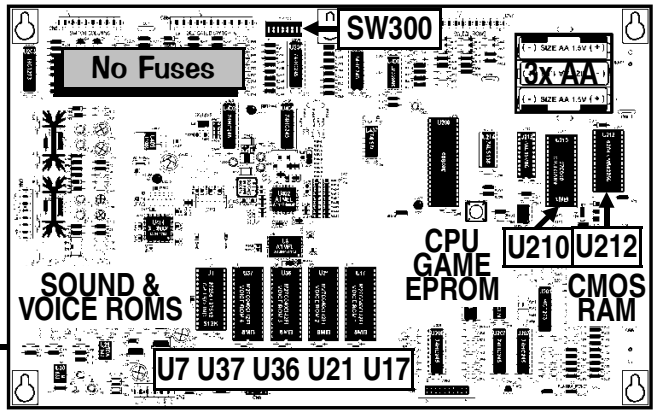

Solenoid Expander Board ‡

Tournament Interface Board ‡

‡ UK or Tournament GAMES ONLY

*For more info., see Section **5**, Chp. **4**, **PCBs** (Yellow Pages)*

For Schematics and/or Component Parts on PC Boards shown on this page, review Section 5, Chapter 4, Printed Circuit Boards (The Yellow Pages).

CPU/Sound Bd. II w/ATMEL ▲

I/O Power Driver Board ▼

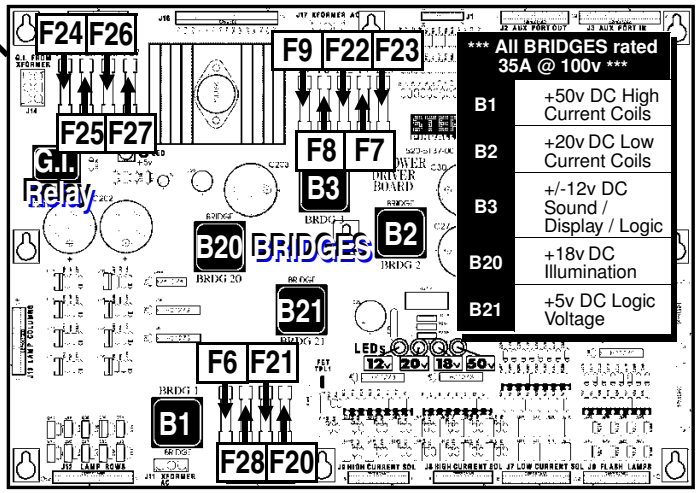

Display Controller Bd. ▶

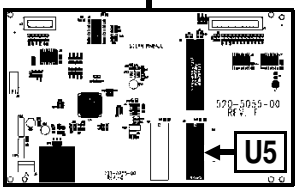

The Display Controller has the Display EPROM (Location: U5 / ROM 0). This board is located behind the 128 X 32 Dot Matrix Display Board.

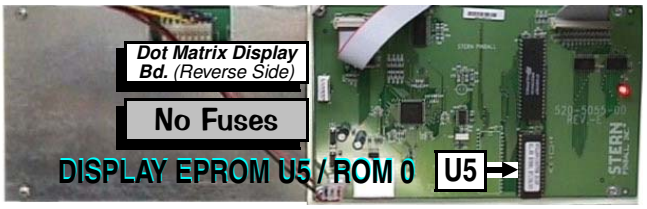

FIND-IT-IN-FRONT: Dr. Pinball Section Explained

The key technical data from various parts of the manual were extracted and combined into the **"Find- It-In-Front: Dr. Pinball Section."** This section (pages **DR.** ❶ - ❿) will assist the technician in locating important technical information needed to troubleshoot the Pinball Machine. **Dr. Pinball** is also available in a Flow Chart Help Format in the Game Display. To access, enter the **Portals™ Service Menu**.

How It Works

First, the operator / technician must enter the ***Service Menu Mode*** *(for a complete description of the* ***Portals™ Service Menu*** *and* ***ICONS Read!*** *Section* ***3****, Chapter* ***1****).* To get into the ***Service Menu Mode***, power-up the game *(if not already)* and open the **Coin Door**. On the **Coin Door** is the **Portals™ Service Switch Set** (**Red**, **Green** & **Black Buttons**).

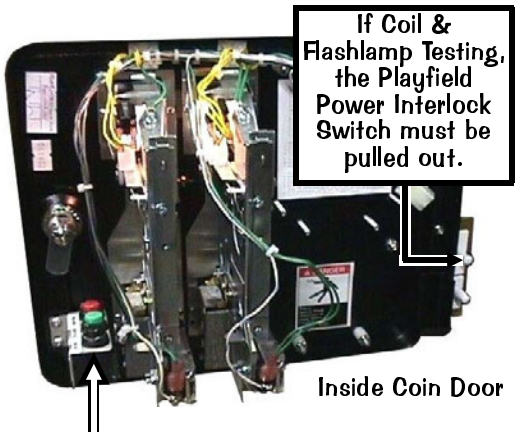

Step 1: Push down the **Black "BEGIN TEST" Button**. Looking at the Video Display you will momentarily see the introductory screen followed by the **MAIN MENU**.

Step 2: Move through the Menus by pushing the **Red "LEFT"** or **Green "RIGHT" Buttons**.

Step 3: Select or activate the *Icons* by pushing the **Black "ENTER" Button**.

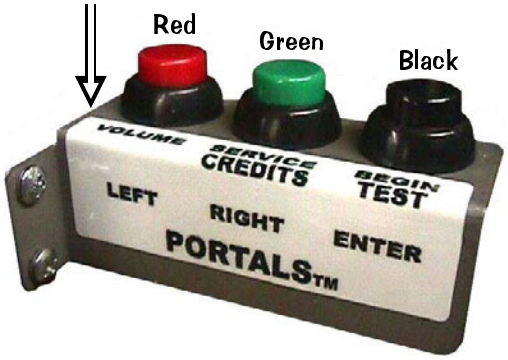

While in the **Portals™ Service Menu**, the **Start Button** can be used in lieu of the **Black Button**; the **Left** & **Right Flipper Buttons** can be used in lieu of the **Red** & **Green Buttons**. However, in *Switch* or *Active Switch Tests* ***only*** the **Red** & **Green Buttons** can be used.

In our **Portals™ Service Menu**, selecting the "DR." *Icon* will bring the operator/technician into **DR. PINBALL** (**Flow Chart Menus**), the "on-screen" diagnostic aide. This is a feature that will allow you to utilize the power of the micro-processor assisting in troubleshooting a problem with the machine in a **Flow Chart** format *(follow the questions & answer by using the Mini-Icons in the display).*

After entering **Portals™**, the **MAIN MENU** now appears with the "DIAG" *Icon* (**GO TO DIAGNOSTICS MENU**) flashing; press the **Black "ENTER" Button** to *activate* this **ICON**. The **DIAGNOSTICS MENU** now appears with the "SW" *Icon* (**GO TO SWITCH MENU**) flashing; use the **Red "LEFT"** or **Green "RIGHT" Buttons**, until the "DR." *Icon* (**DR. PINBALL**) is flashing:

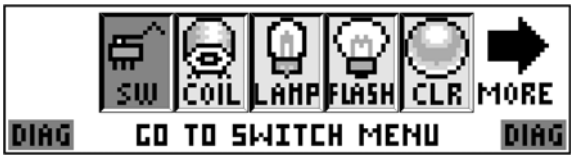

Press the **Black "ENTER" Button** to *activate* this **ICON**. The **DR. PINBALL MENU** (**Flow Chart Menus**) now appears with the COIL "DR." *Icon* flashing. Three (3) *Icons,* Coil "DR.", Switch "DR." and Lamp "DR." are available for selection. Selecting a particular *Icon* will give you a choice of which specific **Coil** *(any and all coil assemblies such as Flippers, VUKs, Magnets, etc.),* **Switch** or **Lamp Circuit** needs to be diagnosed. After selection, *Dr. Pinball* will now display a question or a procedure to follow such as "Does the lamp turn on?" or "Check bridge rectifier BR-20, if short replace." When *Dr. Pinball* displays a question or requests a procedure, *Dr. Pinball* will expect a response such as "NO" or "YES". You the operator/technician must respond by using the **Red** or **Green Buttons** to "SELECT" a *Mini-Icon* and the **Black Button** to "ACTIVATE or ENTER" your selection.

For Mini-Icons explanations & details, see the end of Section ***3****, Chapter* ***2****,* ***GO TO DIAGNOSTICS MENU****,* ***Dr. Pinball****.*

DIAGNOSTIC AIDS

```
OPEN THE DOOR
```

If this ***display flashes***, the game is indicating that **CMOS RAM** memory *(CPU Loc. **U212**)* has been corrupted. This is caused be either failure in memory *(e.g. batteries are dead and/or faulty **RAM**)* or upon installation of updated version of game code. Opening the **Coin Door** will initiate a *Factory Restore (Reset)*, by opening the ***Memory Protect Switch***. Check battery voltage at **VBATT Test Point** on the **CPU/Sound Bd.** *(more details in Section **5**, Chapter **4**, **PCBs**).*

```
OPERATOR ALERT!
#2 AUTO LAUNCH
COIL MALFUNCTION
```

This ***display*** is shown momentarily during **Game Mode** or **Power-Up** to alert the operator of a coil malfunction *(coil doesn't energize or coil fires a multiple number of times)*. **OPERATOR ALERT!** works by monitoring any *switch activated coil* that has the potential to trap a ball when disabled *(e.g. in the Auto Launch, Scoop, Eject, etc.)*. This alert can also appear if a switch associated with a coil *(e.g. #16 Shooter Lane & #2 Auto Launch)* is stuck closed *(caused by a switch jam or stuck ball)*; the **CPU/Sound Board** will activate the coil approximately ten times and if the switch remains closed, the game will report this switch in **Technician Alerts** & will indicate the *following display warning:*

```
PLEASE CHECK
TECH REPORT
PORTALS->DIAG->TECH
```

If this ***Tech Report Alert flashes*** *(along with an audible sound)*, the game has detected faulty switches and/or missing pinballs. Select the "TECH" *Icon* for information *(review **Technician Alerts**, **Pages 24-25**)*. *For this **Alert display** to appear, Standard Adj. **49**, **must be changed** to **POWERUP**, **COIN DOOR** or **POWERUP AND COIN DOOR**, the default is **NEVER** (review Section **3**, Chp. **4**, **GO TO ADJUSTMENTS MENU**, Standard Adjustments, Page **44**).*

CPU DIP SWITCH SETTINGS

Location of Dip Switch [SW300] is on the CPU/Sound Board (Right of CN6, Top Middle)

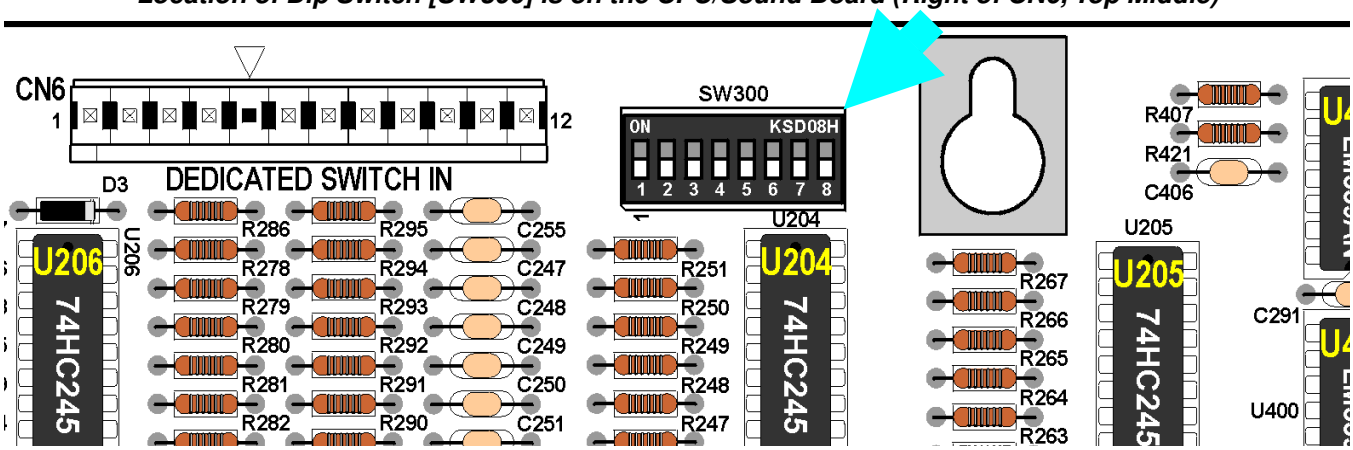

CPU COUNTRY SETTING:	Pos.	1	2	3	4	5	6	7	8
USA	ON								
	OFF	▼	▼	▼	▼	▼	▼	▼	▼

CPU COUNTRY SETTING:	Pos.	1	2	3	4	5	6	7	8
Austria	ON	▲							
	OFF		▼	▼	▼	▼	▼	▼	▼

CPU COUNTRY SETTING:	Pos.	1	2	3	4	5	6	7	8
France	ON		▲	▲					
	OFF	▼			▼	▼	▼	▼	▼

CPU COUNTRY SETTING:	Pos.	1	2	3	4	5	6	7	8
Norway	ON		▲		▲				
	OFF	▼		▼		▼	▼	▼	▼

CPU COUNTRY SETTING:	Pos.	1	2	3	4	5	6	7	8
Australia	ON	▲		▲	▲				
	OFF		▼			▼	▼	▼	▼

CPU COUNTRY SETTING:	Pos.	1	2	3	4	5	6	7	8
Germany	ON	▲	▲	▲					
	OFF				▼	▼	▼	▼	▼

CPU COUNTRY SETTING:	Pos.	1	2	3	4	5	6	7	8
Portugal	ON	▲				▲			
	OFF		▼	▼	▼		▼	▼	▼

CPU COUNTRY SETTING:	Pos.	1	2	3	4	5	6	7	8
Belgium	ON		▲						
	OFF	▼		▼	▼	▼	▼	▼	▼

CPU COUNTRY SETTING:	Pos.	1	2	3	4	5	6	7	8
Greece	ON	▲	▲	▲	▲				
	OFF					▼	▼	▼	▼

CPU COUNTRY SETTING:	Pos.	1	2	3	4	5	6	7	8
Spain	ON		▲			▲			
	OFF	▼		▼	▼		▼	▼	▼

CPU COUNTRY SETTING:	Pos.	1	2	3	4	5	6	7	8
Canada	ON	▲	▲						
	OFF			▼	▼	▼	▼	▼	▼

CPU COUNTRY SETTING:	Pos.	1	2	3	4	5	6	7	8
Italy	ON				▲				
	OFF	▼	▼	▼		▼	▼	▼	▼

CPU COUNTRY SETTING:	Pos.	1	2	3	4	5	6	7	8
Sweden	ON	▲	▲		▲				
	OFF			▼		▼	▼	▼	▼

CPU COUNTRY SETTING:	Pos.	1	2	3	4	5	6	7	8
Denmark	ON	▲			▲				
	OFF		▼	▼		▼	▼	▼	▼

CPU COUNTRY SETTING:	Pos.	1	2	3	4	5	6	7	8
Netherlands	ON			▲					
	OFF	▼	▼		▼	▼	▼	▼	▼

CPU COUNTRY SETTING:	Pos.	1	2	3	4	5	6	7	8
Switzerland	ON			▲	▲				
	OFF	▼	▼			▼	▼	▼	▼

CPU COUNTRY SETTING:	Pos.	1	2	3	4	5	6	7	8
Finland	ON	▲		▲					
	OFF		▼		▼	▼	▼	▼	▼

CPU COUNTRY SETTING:	Pos.	1	2	3	4	5	6	7	8
New Zealand	ON					▲			
	OFF	▼	▼	▼	▼		▼	▼	▼

CPU COUNTRY SETTING:	Pos.	1	2	3	4	5	6	7	8
UK	ON		▲	▲	▲				
	OFF	▼				▼	▼	▼	▼

In SWITCH MENU also select:

ACTIVE and DEDICATED SWITCH TESTS

SWITCH MATRIX GRID, DEDICATED SWITCHES & LOCATIONS

Row (Return) \ Column (Drive)	1: Q1 GRN-BRN CN5-P1	2: Q2 GRN-RED CN5-P3	3: Q3 GRN-ORG CN5-P4	4: Q4 GRN-YEL CN5-P5	5: Q5 GRN-BLK CN5-P6	6: Q6 GRN-BLU CN5-P7	7: Q7 GRN-VIO CN5-P8	8: Q8 GRN-GRY CN5-P9
1: U400 WHT-BRN CN7-P9	1 Cabinet Side: LT BUTTON (UK ONLY)	9 Below P/F: LEFT VUK (DOTS)	17 Above P/F: SWORD LOCK HIGH	25 Above P/F: RIGHT RAMP ENTER (DOTS)	33 Mini-P/F: MINI PF U.L.	41 Below P/F: TOP VUK	49 Below P/F: LEFT BUMPER	57 Below P/F: LEFT OUTLANE
Sw. Part Number:	180-5160-00	180-5116-01	180-5119-02	180-5010-01	180-5057-00	*See Sw. 41 Note*	180-5015-03	500-6227-02
2: U400 WHT-RED CN7-P8	2 Coin Door: 4TH COIN SLOT	10 Below P/F: STANDUP	18 Above P/F: SWORD LOCK MID	26 NOT USED	34 Mini-P/F: MINI PF U.R.	42 Above P/F: INNER LOOP	50 Below P/F: RIGHT BUMPER	58 Below P/F: LEFT RETURN LANE
Sw. Part Number:	180-5204-00	515-6027-08	180-5119-02		180-5057-00	180-5190-28	180-5015-03	500-6227-02
3: U400 WHT-ORG CN7-P7	3 Coin Door: 6TH COIN SLOT	11 Below P/F: 4-BALL TROUGH #1 (LEFT)	19 Above P/F: SWORD LOCK LOW	27 NOT USED	35 Mini-P/F: MINI PF L.L.	43 Below P/F: LEFT TOP LANE	51 Below P/F: BOTTOM BUMPER	59 Below P/F: LEFT SLINGSHOT
Sw. Part Number:	*Future Use*	180-5119-02	180-5119-02		180-5057-00	500-6227-02	180-5015-03	180-5054-00 (x2)
4: U400 WHT-YEL CN7-P6	4 Coin Door: RIGHT COIN SLOT	12 Below P/F: 4-BALL TROUGH #2	20 Below P/F: RIGHT ORBIT LOW	28 Above P/F: BALROG HIT	36 Mini-P/F: MINI PF L.R.	44 Below P/F: MIDDLE TOP LANE	52 Above P/F: SPINNER	60 Below P/F: RIGHT OUTLANE
Sw. Part Number:	180-5204-00	180-5119-02	500-6227-02	180-5119-00	180-5057-00	500-6227-02	180-5190-28	500-6227-02
5: U401 WHT-GRN CN7-P5	5 Coin Door: CENTER COIN SLOT / DBA	13 Below P/F: 4-BALL TROUGH #3	21 Above P/F: RIGHT ORBIT HI	29 Below P/F: PALANTIR	37 Below P/F: LEFT ORBIT LOW	45 Below P/F: RIGHT TOP LANE	53 Below P/F: SPOT RING	61 Below P/F: RIGHT RETURN LANE
Sw. Part Number:	180-5204-00	180-5119-02	180-5190-28	515-5162-08	500-6227-02	500-6227-02	515-5162-08	500-6227-02
6: U401 WHT-BLU CN7-P3	6 Coin Door: LEFT COIN SLOT	14 Below P/F: 4-BALL TROUGH VUK OPTO	22 Above P/F: RAIL RAMP EXIT	30 Below P/F: RIGHT VUK (DOTS)	38 Below P/F: LEFT ORBIT HI	46 Below P/F: TOP SAUCER	54 In Cabinet: START BUTTON	62 Below P/F: RIGHT SLINGSHOT
Sw. Part Number:	180-5204-00	*See Sw. 14 Note*	180-5197-00	180-5116-01	500-6227-02	180-5186-00	180-5174-00	180-5054-00 (x2)
7: U401 WHT-VIO CN7-P2	7 Coin Door: 5TH COIN SLOT	15 Below P/F: 4-BALL STACKING OPTO	23 Above P/F: RIGHT RAMP TARGET	31 Below P/F: BALROG OPEN	39 Below P/F: LEFT RAMP ENTER	47 Back Panel: RING MADE	55 In Cabinet: TOURNAMENT START	63 NOT USED
Sw. Part Number:	*Future Use*	*See Sw. 15 Note*	515-6027-08	180-5119-02	500-6227-02	*See Sw. 47 Note*	180-5174-00	
8: U401 WHT-GRY CN7-P1	8 Cabinet Side: RT BUTTON (UK ONLY)	16 Below P/F: SHOOTER LANE	24 Above P/F: RIGHT RAMP MADE	32 Below P/F: BALROG CLOSED	40 Above P/F: LEFT RAMP MADE	48 Back Panel: BACK TROUGH	56 In Cabinet: PLUMB BOB TILT	64 NOT USED
Sw. Part Number:	180-5160-00	180-5157-00	180-5198-00	180-5119-02	180-5010-01	180-5057-00	*See Sw. 56 Note*	

IC U206 INPUTS \ GROUND	GROUND BLK CN6-P1, -P11
1: U206 GRY-BRN CN6-P2	DS-1 on Cabinet Side: #1 LEFT FLIPPER BUTTON
Sw. Part Number:	180-5160-00
2: U206 GRY-RED CN6-P3	DS-2 Below Playfield: #2 LEFT FLIPPER E.O.S (End-of-Stroke)
Sw. Part Number:	180-5149-00 *on Flipper*
3: U206 GRY-ORG CN6-P4	DS-3 on Cabinet Side: #3 RIGHT FLIPPER BUTTON
Sw. Part Number:	180-5160-00
4: U206 GRY-YEL CN6-P6	DS-4 Below Playfield: #4 RIGHT FLIPPER E.O.S. (End-of-Stroke)
Sw. Part Number:	180-5149-00 *on Flipper*
5: U206 GRY-GRN CN6-P7	DS-5 NOT USED
Sw. Part Number:	
6: U206 GRY-BLU CN6-P8	DS-6 on Coin Door: #6 VOLUME (RED BUTTON) (In Test: LEFT)
Sw. Part Number:	180-5192-02
7: U206 GRY-VIO CN6-P9	DS-7 on Coin Door: #7 SERV. CRED. (GREEN BUTTON) (In Test: RIGHT)
Sw. Part Number:	180-5192-04
8: U206 GRY-BLK CN6-P10	DS-8 on Coin Door: #8 BEGIN TEST (BLACK BUTTON) (In Test: ENTER)
Sw. Part Number:	180-5192-00

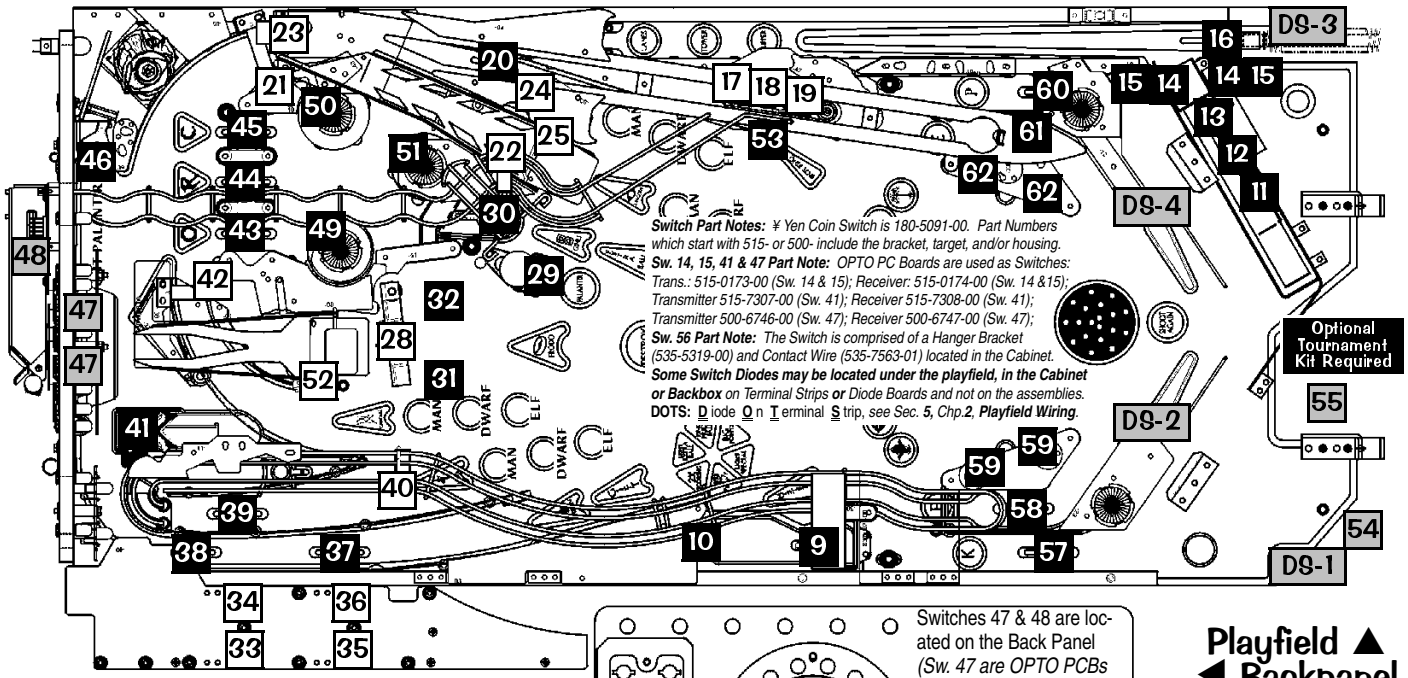

Mini-Upper Playfield ▲ shown moved off the Main Playfield for clarity.

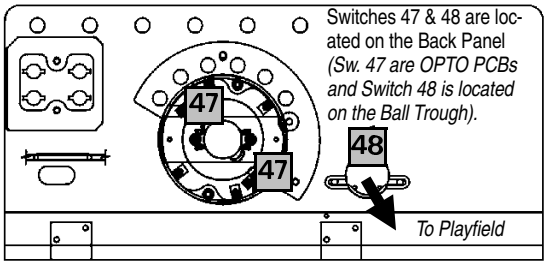

Switches 47 & 48 are located on the Back Panel (*Sw. 47 are OPTO PCBs and Switch 48 is located on the Ball Trough*).

Playfield ▲
◀ Backpanel

= Switches above P/F.
= Switches below P/F.
= Switches not on P/F.

THE LORD OF THE RINGS™

Find-It-In-Front: Dr. Pinball

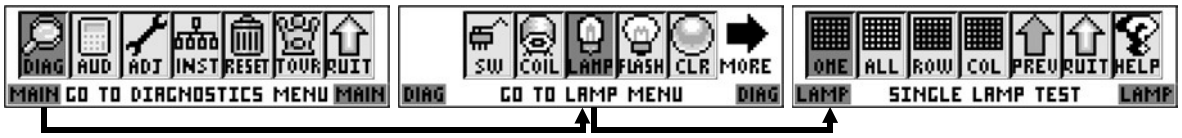

In LAMP MENU also select:

TEST ALL LAMPS, ROW & COLUMN LAMP TESTS

LAMP MATRIX GRID & LOCATIONS

Row (Ground) \ Column (18v)	1: U17 YEL-BRN J13-P9	2: U16 YEL-RED J13-P8	3: U15 YEL-ORG J13-P7	4: U14 YEL-BLK J13-P6	5: U13 YEL-GRN J13-P5	6: U12 YEL-BLU J13-P4	7: U11 YEL-VIO J13-P3	8: U10 YEL-GRY J13-P1
1: Q33 RED-BRN J12-P1	1 #555 Bulb (K) EEP	2 #555 Bulb K (E) EP	3 #555 Bulb KE (E) P	4 #555 Bulb KEE (P)	5 #555 Bulb THE FELLOWSHIP OF THE RING	6 #555 Bulb THE TWO TOWERS	7 #555 Bulb THE RETURN OF THE KING	8 #555 Bulb SHOOT AGAIN
2: Q34 RED-BLK J12-P2	9 #555 Bulb PIPPIN	10 #555 Bulb MERRY	11 #555 Bulb SAM	12 #555 Bulb ARAGORN	13 #555 Bulb FRODO	14 #555 Bulb GANDALF	15 #555 Bulb LEGOLES	16 #555 Bulb GIMLI
3: Q35 RED-ORG J12-P3	17 #555 Bulb BOROMIR	18 #555 Bulb MYSTERY	19 #555 Bulb FRODO ARROW	20 #44 Bulb DESTROY RING	21 #555 Bulb MODE START	22 #555 Bulb PALANTIR	23 #44 Bulb PALANTIR GLOBE	24 #555 Bulb SPOT RING
4: Q36 RED-YEL J12-P4	25 #555 Bulb PIPPIN ARROW	26 #555 Bulb GIFT OF THE ELVES	27 #555 Bulb LIGHT EXTRA BALL	28 #555 Bulb RING MULTIBALL	29 #555 Bulb BIG POINTS	30 #555 Bulb LIGHT SPECIAL	31 #555 Bulb SUPER RING FRENZY	32 #555 Bulb 2X SCORING
5: Q37 RED-GRN J12-P5	33 #555 Bulb LEGOLES ARROW	34 #555 Bulb L RAMP MAN RING	35 #555 Bulb L RAMP DWARF RING	36 #555 Bulb L RAMP ELF RING	37 #555 Bulb GANDALF ARROW	38 #555 Bulb C LOOP MAN RING	39 #555 Bulb C LOOP DWARF RING	40 #555 Bulb C LOOP ELF RING
6: Q38 RED-BLU J12-P6	41 #555 Bulb GIMLI ARROW	42 #555 Bulb EXTRA BALL	43 #555 Bulb GOLLUM MULTIBALL	44 #555 Bulb SPECIAL	45 #555 Bulb MERRY ARROW	46 #555 Bulb R ORBIT MAN RING	47 #555 Bulb R ORBIT DWARF RING	48 #555 Bulb R ORBIT ELF RING
7: Q39 RED-VIO J12-P8	49 #555 Bulb ARAGORN ARROW	50 #555 Bulb R RAMP MAN RING	51 #555 Bulb R RAMP DWARF RING	52 #555 Bulb R RAMP ELF RING	53 #555 Bulb LOCK	54 #555 Bulb LANES	55 #555 Bulb TOWER	56 #555 Bulb FLIPPER
8: Q40 RED-GRY J12-P9	57 #555 Bulb (O) RC	58 #555 Bulb O (R) C	59 #555 Bulb OR (C)	60 #555 Grn. Bulb POTD U.L.	61 #555 Grn. Bulb POTD U.R.	62 #555 Grn. Bulb POTD L.L.	63 #555 Grn. Bulb POTD L.R.	64 #44 Bulb SHOOTER LANE #1 BOT
9: Q41 RED-WHT J12-P10	65 #44 Bulb SHOOTER LANE #2	66 #44 Bulb SHOOTER LANE #3	67 #44 Bulb SHOOTER LANE #4	68 #44 Bulb SHOOTER LANE #5	69 #44 Bulb SHOOTER LANE #6	70 #44 Bulb SHOOTER LANE #7	71 #44 Bulb SHOOTER LANE #8	72 #44 Bulb SHOOTER LANE #9 TOP
10: Q42 RED J12-P11	73 #44 Bulb ESCAPE THE RINGWRAITHS	74 #44 Bulb GANDALF VS SARUMAN	75 #44 Bulb WARG ATTACK	76 #44 Bulb WAR OF THE ENTS	77 #44 Bulb BATTLE WITH SHELOB	78 #44 Bulb DESTROY THE WITCH-KING	79 #555 Bulb TOURNAMENT BUTTON	80 #555 Bulb START BUTTON

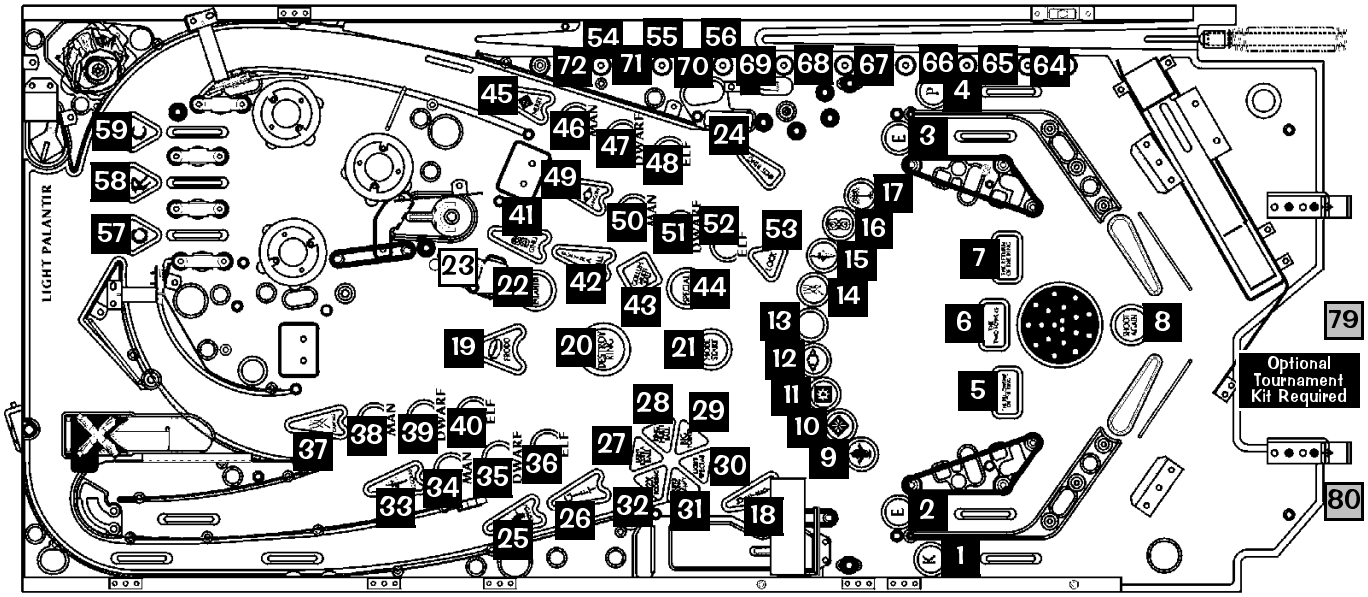

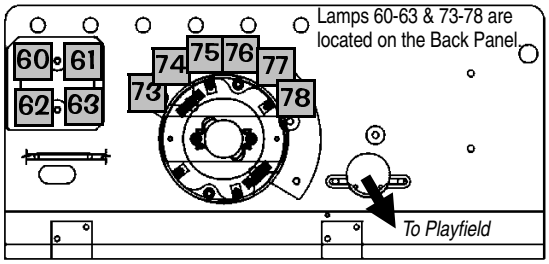

Playfield ▲
◀ Backpanel

= Lamps above Playfield.
= Lamps below Playfield.
= Lamps not on Playfield.

Lamp Part Notes: *#555 Bulb Clear = 165-5002-00. #555 Bulb Green = 165-5054-04 . #44 Bulb Clear = 165-5000-44. See Section **4**, Chapter **1**, **Parts Identification & Location**, Pages **72-74** for more details on bulbs and corresponding sockets.*
Some Lamp Diodes may be located under the playfield, in the Cabinet or Backbox *on Terminal Strips* and not on or with the Lamp Socket.
DOTS: **D**iode **O**n **T**erminal **S**trip, *see Sec. **5**, Chapter **2**, **Playfield Wiring**.*

In COIL MENU also select:

CYCLING COIL TEST

COILS DETAILED CHART TABLE

	High Current Coils Group 1	Drive Transistor	Driver Ouput Board	Power Line Color	Power Line Connection	Power Voltage	Drive Transistor Control Line Color	D.T. Control Line Connect	Coil GA-Turn or Bulb Type
#1	TROUGH UP-KICKER	Q1	▲ I/O Power Driver ▼	YEL-VIO	J10-P4/5	50v DC	BRN-BLK	J8-P1	26-1200 ↻ 090-5044-00T
#2	AUTO LAUNCH	Q2		YEL-VIO	J10-P4/5	50v DC	BRN-RED	J8-P3	24-940 ↻ 090-5036-00T
#3	LEFT VUK	Q3		YEL-VIO	J10-P4/5	50v DC	BRN-ORG	J8-P4	26-1200 ↻ 090-5044-00B
#4	TOP VUK	Q4		YEL-VIO	J10-P4/5	50v DC	BRN-YEL	J8-P5	26-1200 ↻ 090-5044-00B
#5	RIGHT VUK	Q5		YEL-VIO	J10-P4/5	50v DC	BRN-GRN	J8-P6	26-1200 ↻ 090-5044-00B
#6	RING MAGNET	Q6		VIO-YEL	J10-P3	50v DC	BRN-BLU	J8-P7	20½-480 ↻ 090-5064-02
#7	RIGHT TOWER DOTS	Q7		YEL-VIO	J10-P4/5	50v DC	BRN-VIO	J8-P8	23-800 090-5001-NL
#8	LOOP DIVERTER	Q8		GRY-YEL~3A Fuse~YEL-VIO	J10-P1/2	50v DC	BRN-GRY	J8-P9	22-1080 ↻ 090-5032-00T

Diode On Terminal Strip (if noted)

	High Current Coils Group 2	Drive Transistor	Driver Ouput Board	Power Line Color	Power Line Connection	Power Voltage	Drive Transistor Control Line Color	D.T. Control Line Connect	Coil GA-Turn or Bulb Type
#9	LEFT BUMPER	Q9	▲ I/O Power Driver ▼	YEL-VIO	J10-P4/5	50v DC	BLU-BRN	J9-P1	26-1200 ↻ 090-5044-00T
#10	RIGHT BUMPER	Q10		YEL-VIO	J10-P4/5	50v DC	BLU-RED	J9-P2	26-1200 ↻ 090-5044-00T
#11	BOTTOM BUMPER	Q11		YEL-VIO	J10-P4/5	50v DC	BLU-ORG	J9-P4	26-1200 ↻ 090-5044-00T
#12	NOT USED	Q12					BLU-YEL	J9-P5	
#13	ORBIT PIN	Q13		BRN	J7-P1	20v DC	BLU-GRN	J9-P6	26-1200 ↻ 090-5044-00B
#14	FLASH: HELMS DEEP RT	Q14		ORG	J6-P10	50v DC	BLU-BLK	J9-P7	#906 Bulb 165-5004-00
#15	LEFT FLIPPER (50v RED/YEL)	Q15		GRY-YEL~3A Fuse~RED-YEL	J10-P1/2	50v DC	ORG-GRY	J9-P8	22-900 ↻ 090-5020-20T
#16	RIGHT FLIPPER (50v RED/YEL)	Q16		BLU-YEL~3A Fuse~RED-YEL	J10-P1/2	50v DC	ORG-VIO	J9-P9	22-900 ↻ 090-5020-20T

	Low Current Coils Group 1	Drive Transistor	Driver Ouput Board	Power Line Color	Power Line Connection	Power Voltage	Drive Transistor Control Line Color	D.T. Control Line Connect	Coil GA-Turn or Bulb Type
#17	LEFT SLINGSHOT	Q17	▲ I/O Power Driver ▼	BRN	J7-P1	20v DC	VIO-BRN	J7-P2	23-800 ↻ 090-5001-00T
#18	RIGHT SLINGSHOT	Q18		BRN	J7-P1	20v DC	VIO-RED	J7-P3	23-800 ↻ 090-5001-00T
#19	TOP SAUCER	Q19		BRN	J7-P1	20v DC	VIO-ORG	J7-P4	26-1200 ↻ 090-5044-00B
#20	BALROG MOTOR RELAY	Q20		BRN	J7-P1	20v DC	VIO-YEL	J7-P6	DC Relay 520-5066-00
#21	SWORD LOCK RELEASE	Q21		BRN	J7-P1	20v DC	VIO-GRN	J7-P7	27-1500 ↻ 090-5004-00T
#22	BALROG MOTOR	Q22		BRN	J7-P1	20v DC	VIO-BLU	J7-P8	Motor 041-5088-01
#23	FLASH: HELMS DEEP LT	Q23		ORG	J6-P10	20v DC	VIO-BLK	J7-P9	#906 Bulb 165-5004-00
#24	OPTIONAL COIL	Q24		RED	J16-P7	5v DC	VIO-GRY	J7-P10	Opt. 5v

	Low Current Coils Group 2	Drive Transistor	Driver Ouput Board	Power Line Color	Power Line Connection	Power Voltage	Drive Transistor Control Line Color	D.T. Control Line Connect	Coil GA-Turn or Bulb Type
#25	FLASH: POPS X3	Q25	▲ I/O Power Driver ▼	ORG	J6-P10	20v DC	BLK-BRN	J6-P1	#906 Bulb 165-5004-00
#26	FLASH: RING	Q26		ORG	J6-P10	20v DC	BLK-RED	J6-P2	#906 Bulb 165-5004-00
#27	FLASH: BACK PANEL	Q27		ORG	J6-P10	20v DC	BLK-ORG	J6-P3	#906 Bulb 165-5004-00
#28	NOT USED	Q28					BLK-YEL	J6-P4	
#29	FLASH: RINGWRAITH	Q29		ORG	J6-P10	20v DC	BLK-GRN	J6-P5	#906 *Red* 165-5004-02
#30	FLASH: SWORD	Q30		ORG	J6-P10	20v DC	BLK-BLU	J6-P6	#906 Bulb 165-5004-00
#31	FLASH: DESTROY THE RING	Q31		ORG	J6-P10	20v DC	BLK-VIO	J6-P7	#89 Bulb 165-5000-89
#32	FLASH: BALROG	Q32		ORG	J6-P10	20v DC	BLK-GRY	J6-P8	#89 Bulb 165-5000-89

Note: In Test Flash Lamps Menu ("Flash" Icon), Flashers tested are all Flash Lamps located between Q1-Q32 (This Game: Q14, Q23 & Q25-Q27, Q29-Q32)

	Auxiliary (UK ONLY)	Drive Transistor	Driver Ouput Board	Power Line Color	Power Line Connection	Power Voltage	Drive Transistor Control Line Color	D.T. Control Line Connect	Coil GA-Turn
	AUX 1: LEFT UP/DOWN POST	Q1	UK 3X Trans. Driver Board	BRN	J7-P1	20v DC	WHT	J2-P3	26-1200 ↻ 090-5044-00T
	AUX 2: CENTER UP/DOWN POST	Q2		BRN	J7-P1	20v DC	RED	J2-P4	23-1100 ↻ 090-5030-00T
	AUX 3: RIGHT UP/DOWN POST	Q3		BRN	J7-P1	20v DC	ORG	J2-P7	26-1200 ↻ 090-5044-00T

↻ **Coil Note:** ↻ Either -00**B** *or* -00**T** can be used for coil replacements. *B/T listed is preferable for easier diode access & may differ on game.*

COIL & FLASH LAMP LOCATIONS

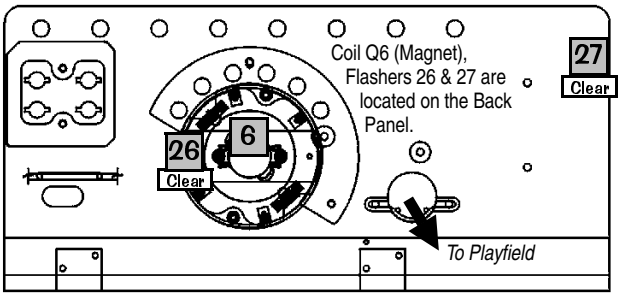

◀ Backpanel

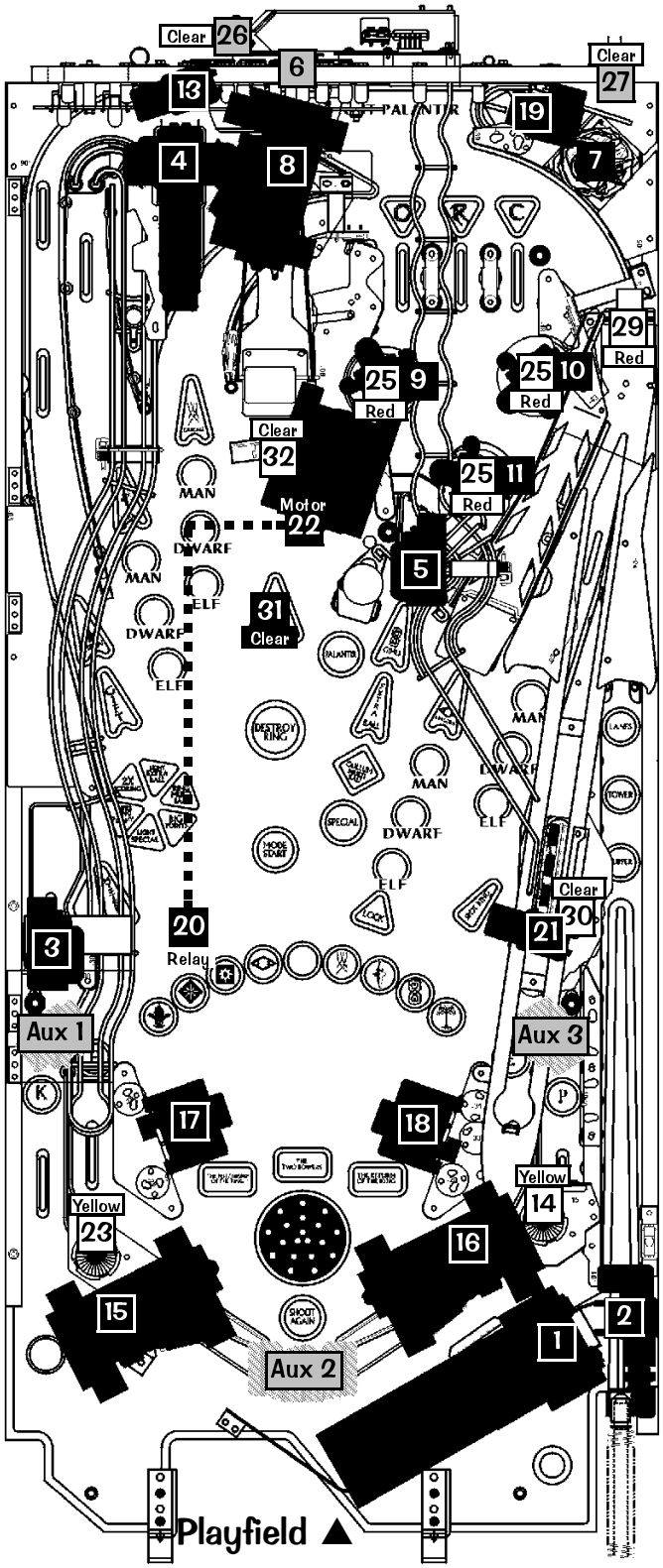

Typical Switch Wiring & Schematic

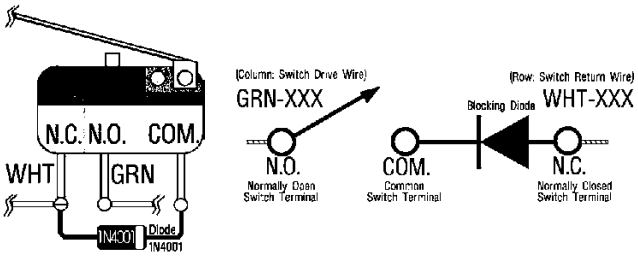

Dedicated Switch Schematic

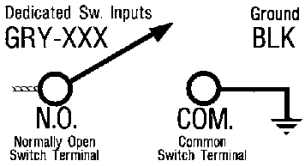

Typical Lamp Wiring & Schematic

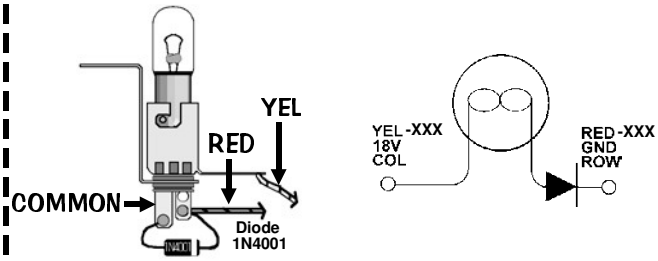

Typical Coil Wiring

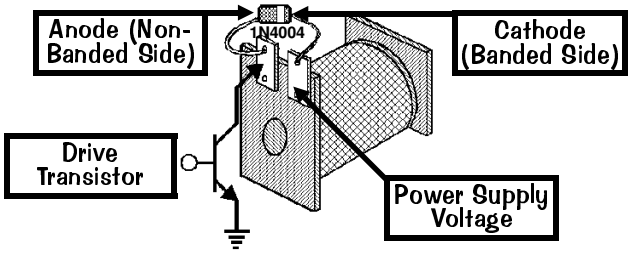

= Coils / Flash Lamps above Playfield.

= Coils / Flash Lamps below Playfield.

= Coils / Flash Lamps not on Playfield.

Color = Color of Mini-Mars of Flash Lamp Bulb.

Some Coil or Flash Lamp Diodes may be located under the playfield, in the Cabinet or Backbox *on Terminal Strips* ***or*** *Diode Boards and not on the assemblies.*
DOTS: Diode On Terminal Strip *See Section* ***5****, Chapter* ***2****,* ***Playfield Wiring****.*

Coil Q24 is Optional. *If either a Coin Meter, Token Dispenser or Knocker (all optional equipment) is required, call Technical Support for more information, 1-800-542-5377 or 1-708-345-7700.*

Domestic Pinball & Redemption Distributors Map

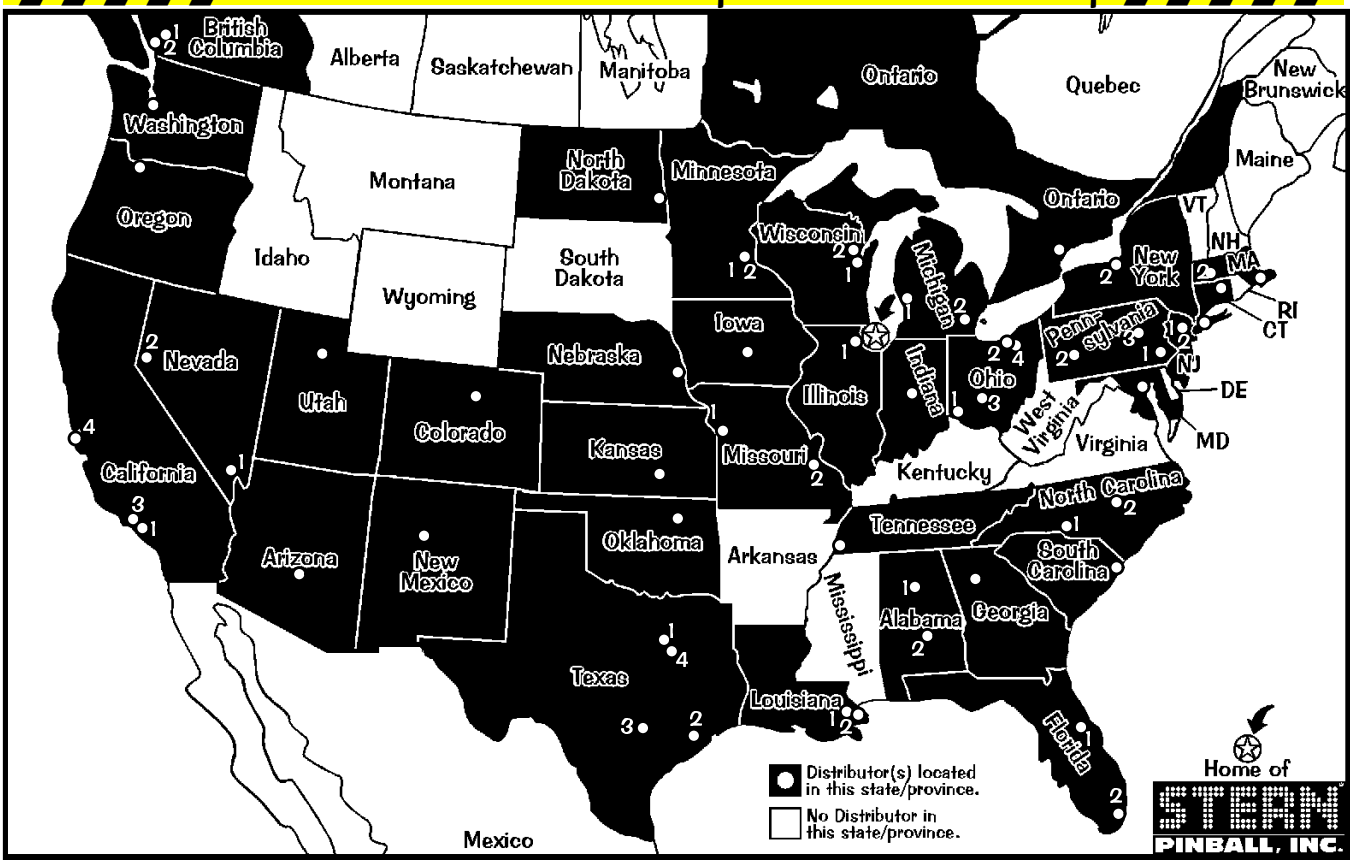

International Distributors Map

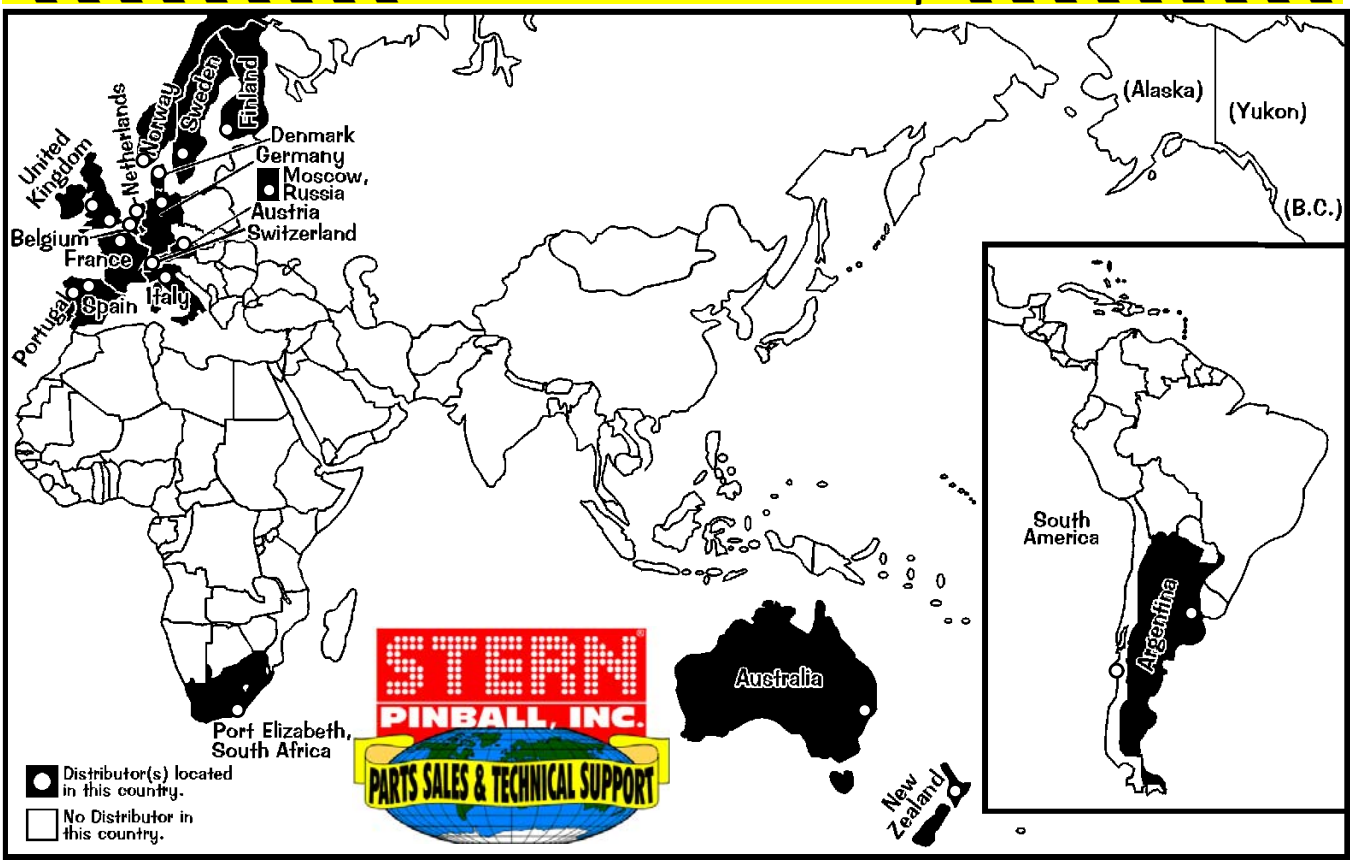

For *Parts & Service*, call your nearest Distributor. View the above maps & the directories on the next page to locate your closest Distributor in your state, province, or country. Distributors and phone numbers are subject to change. Call **Stern® Pinball, Inc.** *(Parts Sales & Technical Support)* with any questions or if your Distributor cannot help you: **1-800-542-5377** (in **USA** or **Canada**) or **1-708-786-5466**. Visit us at www.SternPinball.com for current Distributor Information & other pinball needs.

THE LORD OF THE RINGS™
Find-It-In-Front: Dr. Pinball

Domestic Pinball & Redemption Distributors Directory

ALABAMA
Birmingham Vending
Birmingham (1)
1-205-324-7526

Franco Distributing
Montgomery (2)
1-334-834-3455

ARIZONA
Betson West
Phoenix
1-480-380-8857

Mountain Coin
Phoenix
1-602-269-7596

CALIFORNIA
Betson West
Buena Park (1)
1-714-228-7500
So. San Francisco (2)
1-650-952-4220

C.A. Robinson
Los Angeles (3)
1-323-735-3001
San Francisco (4)
1-650-871-4280

COLORADO
Mountain Coin
Denver
1-303-427-2133

CONNECTICUT
TDM Distributing
Williamantic
1-860-423-1403

FLORIDA
Birmingham Vending
Orlando (1)
1-407-425-1505

Brady Distributing
Miami [Miramar] (2)
1-954-874-1100
Orlando (1)
1-407-872-1666

GEORGIA
Greater Southern Dist.
Smyrna
1-770-803-3040

ILLINOIS
American Vending
Elk Grove Village
1-847-439-9400

Atlas Dist. International
Elk Grove Village
1-847-952-7500

World Wide Distributing
Elk Grove Village
847-434-0400

IOWA
Greater America Dist.
Johnston
1-515-278-4455

Moss Distributing
Des Moines
1-515-266-6422

INDIANA
Atlas Dist. International
Indianapolis
1-317-786-6892

Shaffer Distributing
Indianapolis
1-317-899-2530

KANSAS
United Dist., Inc.
Wichita
1-316-263-6181

LOUISIANA
AMA Distributors, Inc.
Metairie (1)
1-504-835-3232

Parts & Service Only:

New Orleans Novelty
New Orleans (2)
1-504-888-3500

MARYLAND
Betson Enterprises
Baltimore
1-410-646-4100

Parts & Service Only:

Weiner Distributing
Baltimore
1-410-525-2600

MASSACHUSETTS
Betson Ent. (NECO)
Norwood (1)
1-781-769-9760

Gekay Sales
E. Longmeadow (2)
1-413-525-2700

MICHIGAN
Atlas Dist. International
Wyoming (1)
1-616-241-1472

Cleveland Coin Machine
Livonia (2)
1-734-432-1040

MINNESOTA
Lieberman Music
Minneapolis (1)
1-952-887-5299

Moss Distributing
Richfield (2)
1-612-798-8030

MISSOURI
Greater America Dist.
Kansas City (1)
1-816-531-4300

Moss Distributing
Kansas City (1)
1-816-231-6600

Shaffer Distributing
St. Louis (2)
1-314-645-3393

NEBRASKA
Central Dist.
Omaha
1-402-493-5600

Greater America Dist.
Omaha
1-402-553-2812

NEVADA
Mountain Coin
Las Vegas (1)
1-702-798-0900

Reno Game Sales
Reno (2)
1-775-829-2080

NEW JERSEY
Betson Enterprises
Carlstadt (1)
1-201-438-1300

Jack Guarnieri Service Co., Inc. (Pinballsales.com)
Lakewood (2)
1-732-364-9900

NEW MEXICO
Mountain Coin
Albuquerque
1-505-345-7706

NEW YORK
Betson Enterprises
New Hyde Park (2)
1-516-354-4647
Syracuse (3)
1-315-437-2400

Parts & Service Only:

Bay Coin
Richmond Hill (1)
1-718-291-5757

NORTH CAROLINA
Brady Distributing
Charlotte (1)
1-704-357-6284

Operators Distributing
Archdale (2)
1-336-884-5714

NORTH DAKOTA
M.H. Associates, Inc.
Fargo
1-701-282-7877

OHIO
Atlas Dist. International
Cincinnati (1)
1-513-851-4100

Cleveland Coin
Cleveland (2)
1-216-692-0960

Shaffer Distributing
Columbus (3)
1-614-421-6800
Macedonia (4)
1-330-467-4850

OKLAHOMA
Galaxy Distributing
Tulsa
1-918-835-1166

OREGON
Betson West
Portland
1-503-772-4567

Mountain Coin
Portland
1-503-234-5491

Specialty Coin Products
Portland
1-503-786-9200
Toll-Free
1-800-987-4946

PENNSYLVANIA
Betson Enterprises
King Of Prussia (1)
1-610-265-1155
Pittsburgh (2)
1-412-331-8703

Cleveland Coin Machine
Pittsburgh (2)
1-412-920-1300

Roth Novelty (Superior)
Wilkes-Barre (3)
1-570-824-9994

SOUTH CAROLINA
Parts & Service Only:

Green Coin
Mrytle Beach
1-843-626-1900

TENNESSEE
Brady Distributing
Memphis
1-901-345-7811

Parts & Service Only:

Green G.A.M.E.S.
Memphis
1-901-353-1000

TEXAS
Amusement Distributors
San Antonio (3)
1-210-225-3844

Betson Texas
Dallas (1)
1-214-638-4900

Commercial Music
Dallas (1)
1-214-741-6381

Discount Arcade Games
Crowley (1)
1-817-297-0440

H.A. Franz, & Co.
Houston (2)
1-713-523-7366
San Antonio (3)
1-210-226-6322

Master Sales
Corsicana (4)
1-903-874-4740

UTAH
Mountain Coin
Salt Lake City
1-801-262-5494

Struve Distributing
Salt Lake City
1-801-328-1636

WASHINGTON
Mountain Coin
Seattle
1-206-682-5700

WISCONSIN
Pioneer Sales & Svc.
Green Bay (1)
1-920-336-5800
Menomonee Falls (2)
1-262-781-1420

Lieberman/Viking Vend.
Menomonee Falls (2)
1-262-703-4168

CANADA

ONTARIO
Starburst Coin Mach.
Toronto
1-416-251-2122

BRITISH COLUMBIA
Parts & Service Only:

Can. Coin Machine
Burnaby (1)
1-604-420-4008

Parts & Service Only:

Pacific Vending
Vancouver (2)
1-604-324-2164

Note: *For states and Canadian Provinces which do not have Distributors, call the neighboring state or province with the city closest to you (indicated with a white dot). States or Provinces with more than 1 city containing a distributor are numbered. View the map on the previous page.*

Note: *Distributors are subject to change. Visit us at* **www.SternPinball.com** *for current Distributor Information.*

International Distributors Directory

ARGENTINA
South Company
Mar Del Plata
[54] 2234-95-5532

AUSTRALIA
Amusement Mach. Dist.
Matraville
[61] 2931-6-6000

AUSTRIA
Parts & Service Only:

R. Rupp
Leibnitz
[43] 3452-8-6105

Parts & Service Only:

TAB
Ansfelden
[43] 7229-7-8040

BELGIUM
NAMUSCO
Brussels
[32] 2414-4596

Belgium Continued
Parts & Service Only:

Splin S.A.
Liege
[32] 4362-7677

DENMARK
JK Automater A/S
Thisted
[45] 9792-0925

ENGLAND
see UNITED KINGDOM

FINLAND
Pelika Ray-Oy
Espoo
[35] 5894-370-2925

FRANCE
Avranches Automatic
Ducey
[33] 2338-9-6162

SFA
Paris
[33] 1532-6-8080

GERMANY
ADP Gauselmann
Espelkamp
[49] 5741-27-3384

Bergmann Int'l Gaming
Rellingen
[49] 4101-3-0240
Witten
[49] 2302-28-2540

MEXIM
Espelkamp
[49] 5772-4-9422

HOLLAND
see THE NETHERLANDS

ITALY (RSM)
Tecnoplay S.A.
San Marino
[39] 5499-0-1508

THE NETHERLANDS
JVH Gaming Products
Tilburg
[31] 1359-5-3200

NEW ZEALAND
Coin Cascade Ltd.
Christchuch
[64] 3338-1411

Parts & Service Only:

Amco Machine Supplies
Auckland
[64] 9846-7606

NORWAY
Vendcomatic
Oslo
[47] 2291-8383

PORTUGAL
Jacinto & Martins, S.A.
Belas
[35] 1214-32-5624 *or*
[35] 1214-32-5638

RUSSIA
O.D.A. Game Machines
Moscow
[095] 219-2949 *or*
[095] 219-8917

SOUTH AFRICA
K & W Amusements
Port Elizabeth
[27] 4148-4-3344 *or*
[27] 4148-4-2940

SPAIN
Comercial Cocamatic
Coslada (Madrid)
[34] 9167-1-6980

Parts & Service Only:

Sente, S.A.
Madrid
[34] 9154-1-7112

SWEDEN
Bjuvia Fritid AB
Bjuv
[46] 4238-6900

SWITZERLAND
Novomat, A.G.
Harkingen
[41] 6238-8-8961

UNITED KINGDOM
Electrocoin
London, England
[44] 2089-65-2055

Parts & Service Only:

Electrocoin Aftersales
Cardiff, S. Glamorgan
[44] 2920-45-0345

Note: *From inside the US, use prefix 011-.*

POWER REQUIREMENTS

This game ***must be connected to a properly grounded outlet to reduce shock hazard*** & insure proper game operation. *See Sec. **5**, Schematics & Troubleshooting, Chp. **3**, Cabinet Wiring (Transformer Power Wiring), for transformer connections required for **Normal**, **High**, and **Low Line** conditions.*

Normal Line:	110v AC - 125v AC @ 60Hz	
Domestic use an 8AMP 250v Slo-Blo Fuse.	**AVG OPERATION** CURRENT: **2.8AMP** WATTAGE: **329w**	**MAX OPERATION** CURRENT: **8AMP** WATTAGE: **940w**
High Line:	**218v AC - 240v AC @ 50Hz**	
Export use 2x 5AMP 250v Slo-Blo Fuses. (*England & Hong Kong use an 8AMP 250v S/B Fuse.)	**AVG OPERATION** CURRENT: **1.8AMP** WATTAGE: **412w**	**MAX OPERATION** CURRENT: **5AMP** | **8AMP*** England & Hong Kong use an 8A Fuse. WATTAGE: **1145w** | **1832w***
Low Line:	**95v AC - 108v AC @ 50Hz / 60Hz**	
Export Japan Only use an 8AMP 250v Slo-Blo Fuse.	**AVG OPERATION** CURRENT: **2.6AMP** WATTAGE: **264w**	**MAX OPERATION** CURRENT: **8AMP** WATTAGE: **812w**

TRANSPORTATION

BEFORE TRANSPORTING

To reduce the possibility of damage, observe **ALL** precautions whenever transporting the game.

***Read & follow** Section **1**, Chapter **1**, **Pinball Game Set-Up Procedures**, and **How to Secure the Backbox for Transporting**.* Remove the legs and secure the game within the transporting vehicle.

SAVE AND RETAIN ALL PRINTED INFORMATION INSIDE THE CABINET !

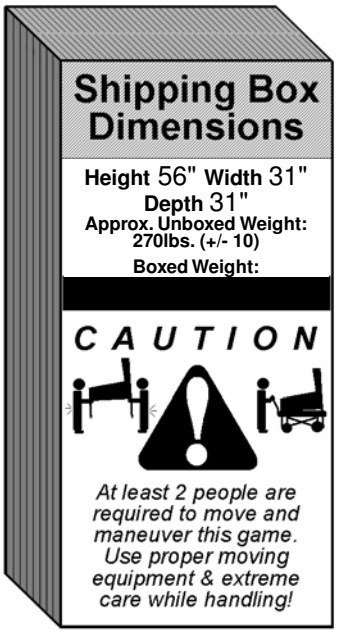

GAME DIMENSIONS

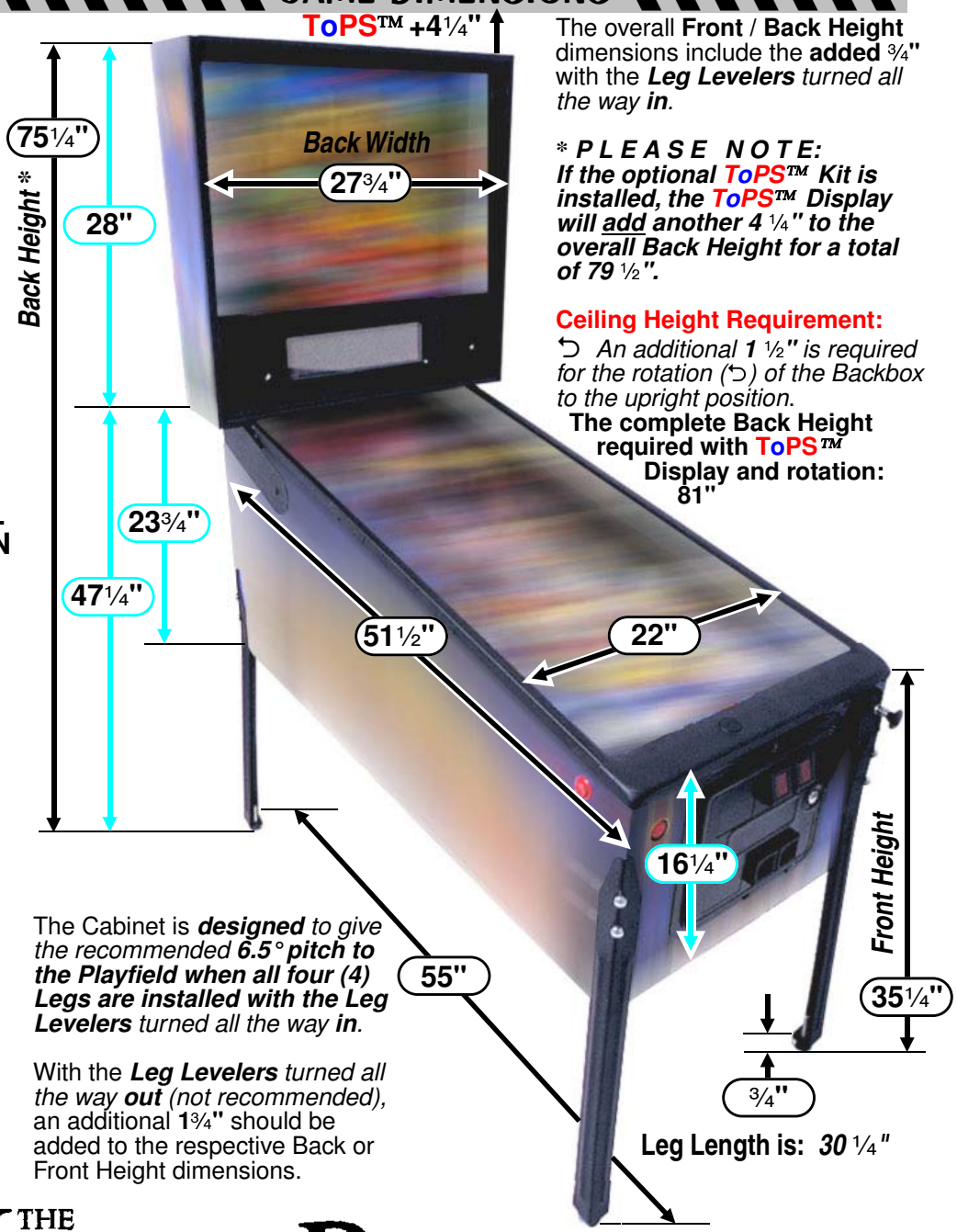

The overall **Front / Back Height** dimensions include the **added** ¾" with the ***Leg Levelers** turned all the way **in**.*

**** PLEASE NOTE:***
If the optional ToPS™ Kit is installed, the ToPS™ Display will add another 4 ¼" to the overall Back Height for a total of 79 ½".

Ceiling Height Requirement:
↺ *An additional **1** ½" is required for the rotation (↺) of the Backbox to the upright position.*
The complete Back Height required with ToPS™ Display and rotation: 81"

The Cabinet is ***designed** to give the recommended **6.5° pitch to the Playfield when all four (4) Legs are installed with the Leg Levelers** turned all the way **in**.*

With the ***Leg Levelers** turned all the way **out** (not recommended)*, an additional **1¾"** should be added to the respective Back or Front Height dimensions.

Leg Length is: *30 ¼"*

The The Lord of the Rings™ Pinball Game Service Manual General Table of Contents

See Sections 3 & 5, Table Of Contents, for details of that Section and it's Chapters.

For Proper Operation of Pinball Game, four (4) Pinballs must be installed! ..... Inside Front

- ▶ Backbox PCB Fuses, ROMs, Bridges, Relays Playfield/Cabinet Fuses, Cab. Switches . DR. ❶
- ▶ Find-It-In-Front: Dr. Pinball Section Explained ▶ How It Works ..... DR. ❷
- ▶ Diagnostic Aids ▶ CPU DIP Switch Setting ..... DR. ❸
- ▶ Switch Matrix Grid, Dedicated Switches & Locations ..... DR. ❹
- ▶ Lamp Matrix Grid & Locations ..... DR. ❺
- ▶ Coils Detailed Chart Table ..... DR. ❻
- ▶ Coil & Flash Lamp Locations ..... DR. ❼
- ▶ Domestic Pinball & Redemption and International Distributors Maps ..... DR. ❽
- ▶ Domestic Pinball & Redemption and International Distributors Directories ..... DR. ❾
- ▶ Power Requirements ▶ Transportation ▶ Game Dimensions ..... DR. ❿

Game Manual General Table of Contents ..... i-ii

SECTION 1 1-4

Chapter 1, After Set-Up 1

- ▷ Pinball Game Set-Up Procedures 1
- ▷ Pinball Game Set-Up Future Reference 2-3
- ▷ How to Secure the Backbox... ▷ Leg Leveler Adjustment ▷ Easy Access... - 3 Positions 4

SECTION 2 5-6

Chapter 1, Game Operation & Features 5

- ▷ Start of Game Features (Starting a Normal Game, ... Team Play, ... Tournament Play with ToPS™)
- ▷ During Game Features (Feature Mode & Combination Shots, Multiball, Replay Feature)
- ▷ End of Game Features (Game Endings, Match Features, Entering Initials/Name) 5
- ▷ Auto Percentaging ▷ Instruction Card 6

SECTION 3 7-57

- ▷ Portals™ Service Menu System Table of Contents (detailed outline of this section) 7
- ▷ Portals™ Service Switch Set Access & Use (Function 1, ...; Function 2, ...; Function 3, ...) 8

Chapter 1, Portals™ Service Menu Introduction 9

- ▷ How to Use This Section 9
- ▷ Portals™ Service Menu Icon Tree 10-11
- ▷ Portals™ Service Menu Example ▶ Exiting the Portals™ Service Menu 12-14

Chapter 2, Go To Diagnostics Menu 15-31

Chapter 3, Go To Audits Menu 32-37

Chapter 4, Go To Adjustments Menu 38-46

Chapter 5, Go To Installs Menu 47-50

Chapter 6, Go To Reset Menu 51-52

Chapter 7, Go To Tournament Menu 53-57

SECTION 4 58-74

Chapter 1, Parts Identification & Location (The Pink Pages) 59

- Overview 59
- The Lord of the Rings™ Backbox Assembly 60
- Speaker Panel Assy. for the Backbox & Associated Parts: 61
- Cabinet - General Parts & Switches 62-63
- Playfield - General Parts, Metal Rails/Ball Guides & Switches (Above) 64-65
- Playfield - General Parts & Switches (Below) 66
- Playfield - Plastics (Screened & Clear) & Decals 67
- Playfield - Rubber Parts Black (Rings Actual Size) 68

Section 4, Chapter 1, Parts Identification & Location (The Pink Pages) Continued on the Next Page

Playfield - Metal Posts (Screws) and Nuts (Actual Size) 69
Playfield - Hex Spacers (Actual Size) 70
Playfield - Posts & Spacers (Actual Size) 71
Playfield - Small Bayonet Type Bulbs & Sockets (Actual Size) 72
Playfield - Large Bayonet Type Bulb and Sockets (Actual Size) 73
Playfield - Wedge Base Bulbs and Sockets (Actual Size) 74
Chapter 2, Drawings for Major Assemblies & Ramps (The Blue Pages) 75-98
▷ Overview 75
Ball Shooter (Plunger) Assembly, 500-6146-00-07 ..... (Top) 76
Autoplunger Arm Weld Assembly, 500-6091-00 with ...Coil Assembly, 500-6092-02 ..... (Bot) 76
4-Ball Trough Assembly, 500-6318-24 and Associated Parts: 77
Flipper (Left) Assembly, 500-6543-11 and Associated Parts: 78
Flipper (Right) Assembly, 500-6543-01 and Associated Parts: 79
Diverter (3-Legged Flipper, Left) Assembly, 500-6543-32-80 and Associated Part: 80
Diverter Assembly & Diverter Gate Adjustment Procedure 81
Ball Deflector Assembly, 500-6657-03 82
Bumper Top Assy., 515-6459-08 (Qty. 3) ..... (Top) 83
Bumper Bottom Assy., 515-6459-04 (Qty. 3) ..... (Mid) 83
Bumper Switch Assy., 515-6459-03 (Qty. 3) and Associated Parts: ..... (Bot) 83
Slingshot Assemblies, 500-5849-00 (Qty. 2) ..... (Top) 84
VUK (Vertical Up-Kicker, Left Style) Assembly, 500-6696-00 ..... (Bot) 84
Exit Scoop, 535-9287-00 and Associated Parts: ..... (Top) 85
VUK (Vertical Up-Kicker, Right Style) Assembly, 500-6696-01 ..... (Bot) 85
Balrog (Motor & Gate) Individual Parts Only, ... 86-87
Orthanc Tower, Up-Kicker and Ball Trough (Up-Kicker Tray) Individual Parts Only, ... 88
Barad-dûr Tilting Tower Individual Parts Only, ... 89
The Lord of the Rings Playfield Figurines (Characters) Overview 90
Down Post (Sword Ball Lock) Assembly, 500-6752-00 ..... (Top) 91
30° Eject (Saucer) Assembly, 500-6511-11 and Associated Part: ..... (Bot) 91
Upper Mini-Playfield, Left & Cetner Wire Ramps, Individual Parts Only, ... 92
Center, Right, Sword and Shooter Lane Ramps, Individual Parts Only, ... 93
Back Panel (Front & Back Views), Individual Parts Only, ... 94-95
Magnetic Ring Assembly, Individual Parts Only, ... 96
Back Panel Trough Assembly, Individual Parts Only, ... 97
▷ UK ONLY OPTIONAL: Ball Deflector Asssemblies, 500-5788-02 (Qty. 2) ..... (Top) 98
▷ UK ONLY OPTIONAL: Up/Down Post Assembly, 500-6293-00 ..... (Bot) 98
SECTION 5 99-150
▷ Schematics & Troubleshooting Table of Contents (detailed outline of this section) 99
▷ Coils Detailed Chart Table 100
Chapter 1, Backbox Wiring (The Yellow Pages) 101-102
Chapter 2, Playfield Wiring (The Yellow Pages) 103-106
Chapter 3, Cabinet Wiring (The Yellow Pages) 107-108
Chapter 4, Printed Circuit Boards (PCBs) (The Yellow Pages) 109-150
APPENDIXES A-J A1-J1
▷ Appendixes A-J Table of Contents (outline of this section) ..... after 150
▷ Appendixes A-J A1-J1
Plastic Part Color Chart ..... (Bottom) H1 + (Top) I1
Glossary of Terms ..... Last Page
Limited Warranty, Cautions, Warnings & Notices ..... Last Page
▶ Switch Matrix Grid & Dedicated Switches ▶ Lamp Matrix Grid ..... Inside Back

After Set-Up

Pinball Game Set-Up Procedures

...after reading the Pinball Game Set-Up Instruction Sheet (SPI Part Nº 755-5310-00) included with your New Pinball Game, continue with the below procedures:

With the Back Glass Removed:

1. Check all connectors in the Backbox for loose wire terminations. Reseat any loose wire by pushing in on the terminal. **Push on all** connectors plugged into the CPU/Sound Board, I/O Power Driver Board, and the Display Power Bd. to check that they are properly seated. Ensure Fluorescent Light Tube is seated correctly. Check that all fuses are seated properly. *Close and lock the Backbox and secure its' keys back inside the Coin Door.*

With the Playfield Glass Removed:

2. Make sure the proper amount of pinballs were installed *(Amount of balls are always specified on decal attached to the lock down assembly and at the top of the inside cover).*

3. Remove all shipping tie downs, shipping blocks, packing foam, shipping instruction pages, etc. (if any) from the game. ***READ ALL PRINTED INFORMATION!*** Shipping instructions, labels and/or decals describe warnings, cautions, and/or important information specific to the game. **SAVE ALL PRINTED INFORMATION.**

4. Raise the playfield and support it, by lifting the **Prop Rod** *(located on the left, inside the cabinet).* The end of the Prop Rod should be placed into the hole under playfield. See the illustration **"Easy Access Service System - 3 Positions"** *on Page 4.*

5. Visually inspect all cabinet cables and connector terminations; ensure no wires or cables are pinched and that cable harnesses are not pulled tight.

6. Lower the playfield and ensure game is **level side-to-side** by adjusting Leg Levelers, if required. See the illustration **"Leg Leveler Adjustment"** *on Page 4.* Start with the Leg Levelers turned all the way in (1.25" from floor to bottom of leg), depending on the condition of the floor, adjust the Leg Levelers as required until the **game pitch is 6.5**°, determined by the Bubble Level.

USE THE BUBBLE LEVEL ON THE WOOD RAIL (LOWER RIGHT) TO DETERMINE IF LEVEL IS ACHIEVED. BUBBLE SHOULD APPEAR BETWEEN THE 2 BLACK LINES. SEE PAGE 4 FOR AN ILLUSTRATION.

The playfield incline affects difficulty of play. Use the recommended incline; Game difficulty is best varied using game adjustments.

With the Coin Door Open:

7. If desired, perform any self tests at this time *(see Section **3**, Chapter **1**, **Portals™ Service Menu Introduction**, and Chapter **2**, **GO TO DIAGNOSTICS MENU**, for instructions on how to enter "**Begin Play Test**" and "**Game Name Test**" Menus to test components on the game).*

8. If desired, adjust **Game Pricing, Standard and/or Custom** *(see Section **3**, Chapter **4**, **GO TO ADJUSTMENTS MENU** and Section **3**, Chapter **5**, **GO TO INSTALLS MENU** to adjust **Game Difficulty**, **3-** or **5-Ball Play**, **Home** or **Tournament Settings**, **Novelty**, **Add-A-Ball**, etc.).*

Per CE: "The appliance has to be placed in a horizontal position." "This appliance is not to be cleaned by a Water Jet."

Pinball Game Set-Up Future Reference

Open up the Printable Version in both 8-1/2 X 11 & 11 X 17.

CAUTION: At least 2 people are required to move and maneuver game.
Use proper moving equipment & extreme care while handling. Pinball game is 260lbs (+/- 10).
Refer to Game Manual for further Game Set-Up Procedures (Sec. 1, Chp. 1) and other important information!
TOOLS REQUIRED: 5/8" Socket Wrench & Utility Knife

1. Before opening box, lay the box flat on its side with **"TRUCK THIS SIDE ONLY"** facing the floor.

2. Slide game out using the **Black Nylon Strapping** as a handle.

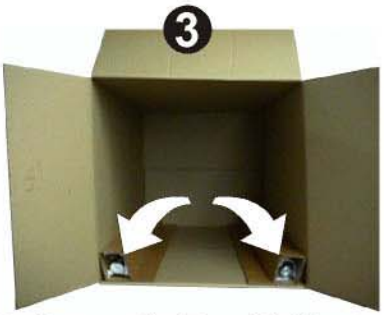

3. Remove the **Four (4) Identical Legs with Levelers** from the carton and set aside. (***SAVE!*** *all packing materials and information sheets related to this pinball until Set-Up is complete.)*

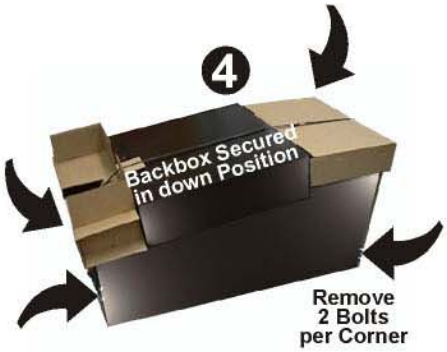

4. At this point **DO NOT CUT STRAPPING** *(You want to keep the Backbox secured in the down position)*. Loosen and remove the 8 Leg Bolts (use 5/8" Socket Wrench) and set aside.

5. Lift game into an **UPRIGHT POSITION** *(Coin Door Facing Up).*

6. Install **FRONT LEGS** using the bolts removed from ***Step 4***. *Secure tightly.* ***Take care not to scratch the Black Finish on any of the Legs.***

7. Carefully set the game down on the **FRONT LEGS**. *Care should be taken...Game is heavy, two (2) people are recommended for this and the following step.*

8. Using supports or two (2) people, prop the rear of the cabinet up and install **REAR LEGS**. *Secure tightly.*

9. Cut **BLACK NYLON STRAPPING**. ***CAUTION:*** *Strapping will* ***SNAP, protect your eyes! Use extreme care*** *when using a utility knife or scissors.*

After Set-Up

10

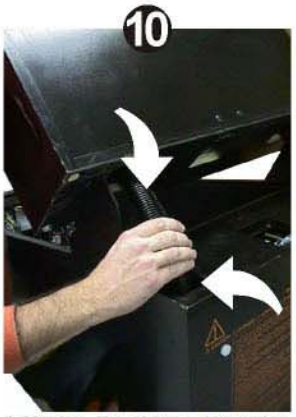

10. Lift the Backbox into the **UPRIGHT POSITION** *(Ensure the cables do not get pinched).*

11

11. After the **BACKBOX** is in the **UPRIGHT POSITION**, locate the **5/16" HEX KEY**. While inserted, rotate **KEY** with a **3/4** turn until latched & locked.

12

12. The next step you will remove the **PLAYFIELD GLASS** & **BACK GLASS** to access the inside of the cabinet & Backbox.

NOTE: KEYS are tied to the **Shooter Rod*** *(if equipped)* or taped to the **Playfield Glass** *(if equipped with Auto Plunger Button). Remove keys. One (1) set of keys opens the Coin Door, the other set is used to unlock the* ***Back Glass*** *to gain access to the White Star Board System.*

13

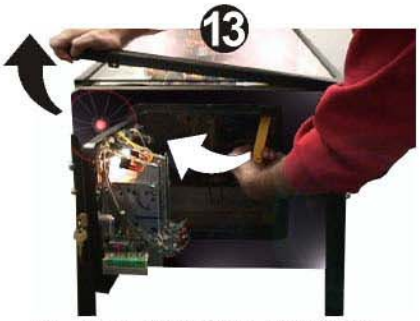

13. Open the Coin Door and pull the **YELLOW HANDLE** to the **LEFT** and at the same time pull up on the **FRONT TOP MOLDING** and remove. The **GLASS** can now be pulled out towards you and removed. ***TAKE CARE*** *while moving; set glass on a safe surface.*

14

14. Through the open **Coin Door**, remove the **RETAINING RING** at the rear of the **CASH BOX** and open. Remove the **PINBALLS** & the **PLUMB BOB** *from the* **SPARE PARTS BAG.**
(Save the other spare parts in cabinet).
Install the **PINBALLS** by placing them on the playfield so they can roll into the Outhole **Ball Trough**.

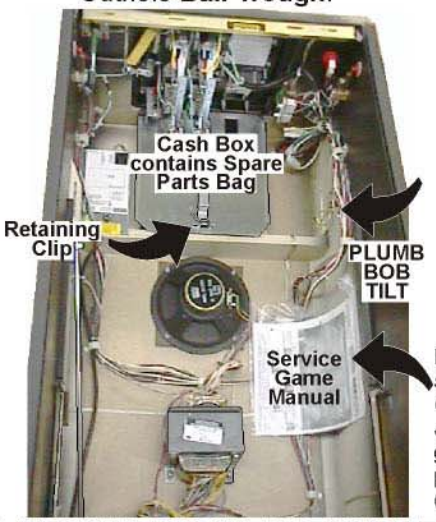

15

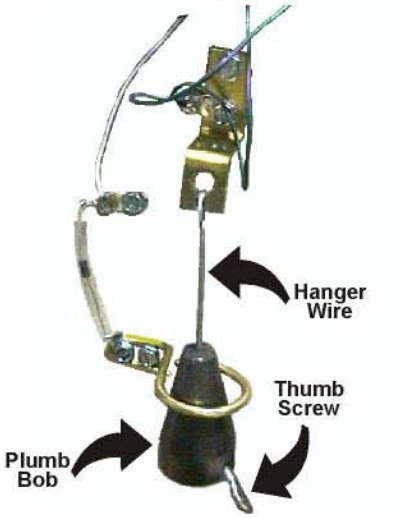

15. Install the **PLUMB BOB** on the **Hanger Wire** & tighten the **Thumb Screw**. Loosening the **Thumb Screw** & lowering or raising the **PLUMB BOB** makes the ***Games Tilt Function*** more or less sensitive.

Remove the **PINBALL GAME MANUAL** *(stapled to side of the left wall of the cabinet). Review Section 1, Chapter 1, which describes how to lift the playfield to access the Plumb Bob Tilt Assembly.* The manual gives you all the important information you need to prepare for final set-up and other important information (such as Parts, Diagnostics, Schematics and more...).

ALWAYS STORE THE MANUAL & INFORMATION SHEETS INSIDE THE CABINET WHEN NOT USING.

How to Secure the Backbox for Transporting

*For more Backbox details & part numbers, see Section **4**, Chapter **1**, **Backbox Assembly**, Pages 60-61.*

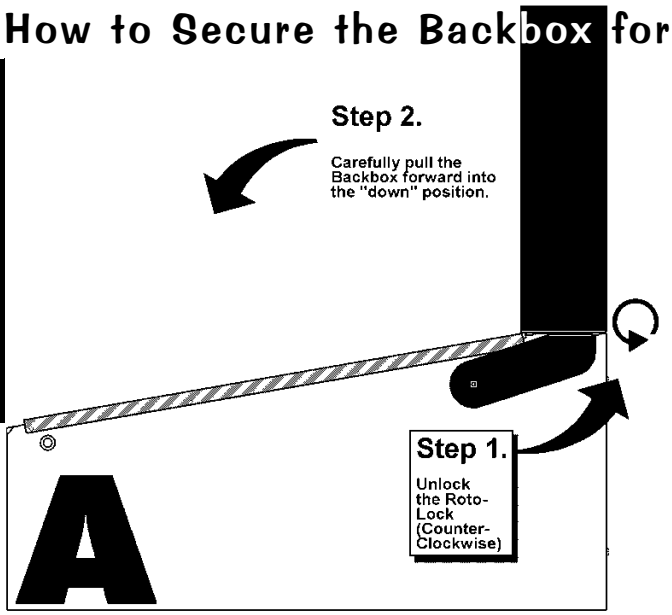

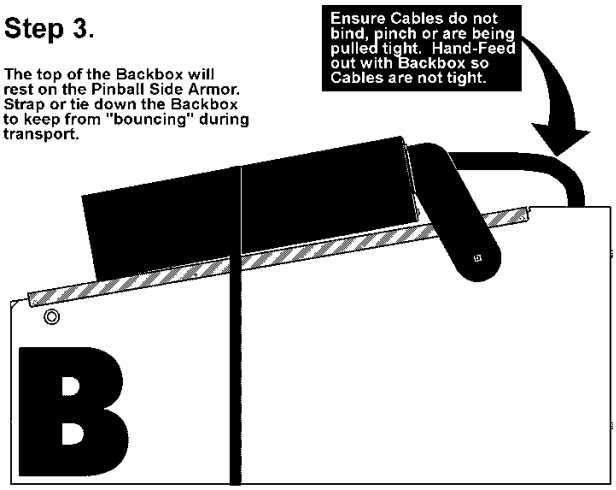

Leg Leveler Adjustment

Attach the four (4) Leg Assemblies to cabinet corners with the eight (8) leg bolts provided .

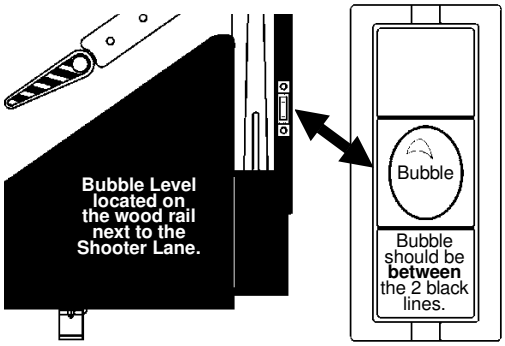

Start adjustment with the leg levelers *turned all the way in.*

View the *bubble* in the level provided on the right side wood rail.

Adjust the front or rear levelers as necessary to cause the bubble to float between the two (2) black lines.

Use a pinball to roll down the center of the playfield for side-to-side leveling.

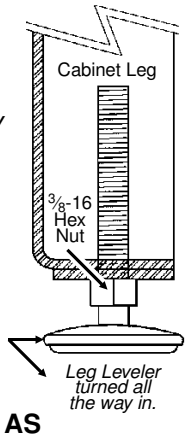

YOUR PLAYFIELD PITCH IS NOW AT 6.5° AS REQUIRED FOR PROPER GAME PLAY!

Note: *For custom adjustment greater than >6.5° can be achieved by turning out the rear leg leveler(s), however,* ***it is not recommended.***

Easy Access Service System - 3 Positions

With the front molding & glass removed, carefully lift the playfield *(take care when using the Bottom Arch to hoist).*

Positions 1 & 2

When lifted high enough, the ***Playfield Support Slide Brackets*** (**Fig. 1A**) can be seen & can clear the cabinet front. At this time, pull the playfield toward the front of the cabinet, checking that the mechanical components clear the cabinet front, then rest the playfield on the ***Playfield Support Slide Brackets*** at the front channel of cabinet (**Fig. 1C**); Or, the ***Prop Rod*** (located on the right inside of cabinet) can be used by positioning the ***Prop Rod*** end into the receiving playfield hole (**Fig. 1B**).

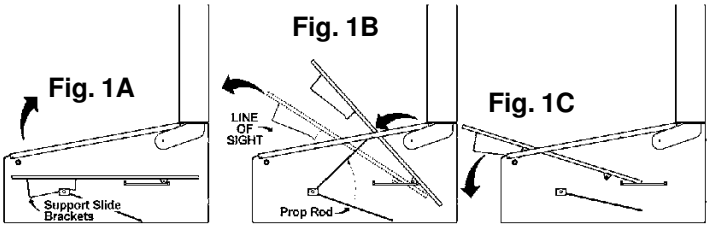

Position 3

With the playfield at rest, hold the sides & pull toward the front of the cabinet (approx. 6" to 8"), until resistance is felt from ***Edge Slide Brackets*** stopping against the ***Slide & Pivot Support Brackets*** located on either side of the cabinet (**Fig. 2A**). At this time, swivel the playfield toward the Backbox, then rest on the top edge (**Fig. 2B & 2C**).

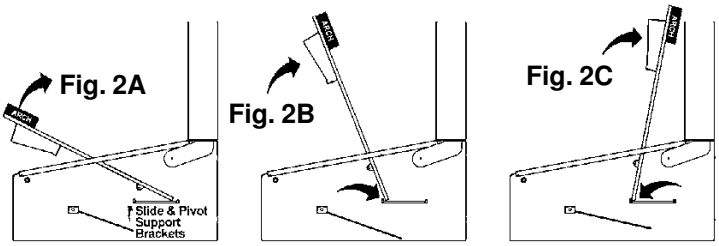

Game Operation & Features

Start of Game Features

Starting a Normal Game

Insert coin(s). The game generates a sound for the first coin & for each subsequent coin with the display indicating the number of credits posted. Press the **Start Button** and a start-up sound is produced, and the posted credits are reduced by one. Subsequent players can be added (**up to 4 can play!**) by pressing the **Start Button** before the end of ball 1 *(with sufficient credit in the game).*

The display now indicates the player or # of players selected from the total depressions of the **Start Button**. The display indicates the ball in play, and a ball is served to the *Shooter Lane*. An introduction is shown followed by Skill Shot Graphics and/or instructions. Pressing the **Start Button** after ball 1 of any player will start a new game *(if credits are available), **but only*** if the **Start Button** is depressed for 2-3 seconds. This delay is to avoid accidental "re-starts" of a game. ***Note:*** *Any partial credit remaining during game play after the end of ball 1, or power down, will be eliminated.*

Starting Team Play (Doubles!)

This option is adjustable with **Standard Adj. 50, Team Scores** (Default = **NO**). If **Standard Adj. 50, Team Scores** is changed to **YES**, then Team Play will be made available. ***Team Play only works in a 4-Player Game.*** The totals for Players 1/ 3 (Team 1) & Players 2 / 4 (Team 2) are then displayed individually ***as well as*** the combined score for **BOTH TEAMS**.

Starting Tournament Play with ToPS

This Pinball Game is **ToPS™ (Tournament Pinball System) Ready**. ***Optional Tournament equipment & hardware (sold separately) is required.*** *Review Section **3**, Chp. **7**, **GO TO TOURNAMENT MENU**, for more info!*

Unlike a *"Normal Game"*, the Tournament Game is started by depressing the **Tournament Start Button** *(located on the Front Molding, if installed).* If adequate credit(s) are posted **and** a ***Tournament is started*** via **Portals™** *(select the "TOUR" Icon in the Main Menu)*, the **Tournament Start Button** will flash. *Any adjustments or installs changed will not be in affect. Starting a Tournament Game defaults to preprogrammed Tournament Rules (e.g. No Extra Balls, Specials or Bonus Credits are awarded); however, starting a Normal Game after a Tournament Game will then revert back to any unique adjustments or installs performed previously.* **During** and **End of Game Features** operate in the same manner *(differences in adjustment defaults are present).*

During Game Features

Feature Mode & Combination Shots

Features are lit on the playfield and started by completing *certain shots (e.g. completion of Target Banks, Orbit(s), Ramp(s) and/or any combination of the shots).*

Multiball

Multiball is started after completion of certain features *(amount of balls used depends on game rules).*

Replay Feature

Replay awards are given as the player exceeds a High Score Level during game play. This can be adjusted with **Standard Adj. 3, Replay Award** (Default = **CREDIT**). Players exceeding the High Score Levels can receive: **CREDIT**, **EXTRA BALL**, or **SPECIAL**. Adjust to **NONE** if a replay award is not desired.

End of Game Features

Game Endings

When all player(s) have played all balls (including any Extra Balls), the game ends. If power is interrupted during the course of a game, it will end that game (***see Starting a Normal Game***). Closure of the Plumb Bob Tilt Switch according to the number of tilts set, **Standard Adj. 15, Tilt Warnings** (Default = **01**) or prolonged closure, will end the current Ball-In-Play. Closure of the Slam Tilt Switch on the Coin Door ends the current game(s).

Match Feature

At the end of each ball, earned bonuses are collected. At the end of the last ball of a game (including any extra balls, if applicable), earned bonuses are collected, then the system produces a random 2-digit number (a multiple of 10; 00 to 90). Matching the last 2 digits of the player's score with this number awards a credit. In **Std. Adj. 13, Match Percentage** (Default = **8%**) can be changed from 0-10%. Changing the percentage to **0% displays** the *"Match Animation"* at the end of the game, however, will never match nor award anything. Changing this adjustment to **OFF** will **not display** the *"Match Animation"* nor award anything.

Entering Initials/Name

If player achieved a new *High Score* in a game or achieved a *Special Feature (if given)* the player may enter 3 Initials. In **Std. Adj. 29, High Score Initials** (Default = **3 Initials**) can also be changed to **10-Letter Name**. Use the **Flipper Buttons** to choose a letter or character as seen on the Dot Display. Hitting the **Start Button** locks in the letter or character and proceeds to the next letter. The game then proceeds into the ***Game-Over Mode*** and then to the ***Attract Mode***.

Note: **Standard Adj. 31**, ***Custom Message*** *(Default = **ON**) can be displayed during the Attract Mode; enter letters in the same fashion.*

*For more details on Adjustments, see Sec. **3**, Chp. **4**.*

Continued Next Page.

Auto Percentaging

This game is equipped with Auto Percentaging, **Standard Adj. 01, Replay Type** (Default = **AUTO**, *adjustable*). The *Replay Percent* is automatically adjusted, **Standard Adj. 02, Replay Percentage**, or you can set a *Fixed Replay Score*. Four levels may be selected. Adjustments allow awarding of a "CREDIT" (or your setting) as each level is exceeded. This can be adjusted with, **Standard Adj. 03, Replay Award** (Default = **CREDIT**). With the ***Autopercentage Feature***, if the actual replay percent- age is higher or lower than that desired, the game will automatically adjust for the new recommended percentage score(s). You may choose to make a different "score-to-beat" adjustment; this is done by utilizing **Standard Adj. 04, Replay Levels**. *For more details with **Adjustments**, see Section **3**, Chapter **4**, **GO TO ADJUSTMENTS MENU**; also, see see Section **3**, Chapter **5**, **GO TO INSTALLS MENU** for further customization of your Pinball Game.*

Instruction Card

Below is a **COPY** of the Game Instruction Card (SPI Nº: 755-5180-00 USA) which is included with every game. If your card is lost or damaged, simply **COPY** this page and *cut out* the Instruction Card as a *temporary replacement* until a *new card is ordered.*

(***Hint:*** **COPY & CUT** along the dotted line and fold in the center to keep the "COPY" sturdy.)

COPY & CUT

THE LORD OF THE RINGS™

For more detailed game rules, visit our website @ www.SternPinball.com and click on the "The Lord of the Rings™" or "Game Archive" Pop Bumper Link.

FOLD HERE

Click on card to open the Instruction Card for printing.

Skill Shot Time your plunge to select your target *(watch Shooter Lane).*

Rings of Power Shoot the 4 *Ring Shots* to collect **Rings of Power :**

- **3 Rings of Elves** Lights **Mode Start** on *Center Ring Shot.*
- **7 Rings of Dwarves** Lights *Mystery Award* on Hobbiton.
- **9 Rings of Men** Lights **Gollum Multiball** on *Right Saucer.*

THE LORD OF THE RINGS™

Movie Multiballs Play all 3 *Movie Multiballs* to light **Destroy the Ring :**

- **The Fellowship of the Ring™** Shoot every shot to collect the 9 *Members of the Fellowship.*
- **The Two Towers™** Spell **K E E P** on *Bottom Lanes* to light *Sword Lock,* then lock 3 Balls on the Sword.
- **The Return of the King™** Collect 5,000 souls on the *Paths of the Dead (Mini-Playfield).*

Gifts of the Elves Win a *Ring Mode* or a *Movie Multiball* to earn a wondrous Gift from the Elves.

Palantir Shoot Barad-dûr to light the Palantir, then shoot the Palantir to aid your quest.

© NLP, Inc. (TM) Tolkien Enterpises under license to New Line Productions, Inc. SPI PART Nº: 755-5180-00 USA

Section 3
Service Menu System
Table of Contents

Service Switch Set (Red, Green & Black Buttons) Access & Use 8
- Function 1, Volume Menu / Function 2, Service Credits Menu / Function 3, Portals™ Service Menu 8

Chapter 1, Portals™ Service Menu Introduction 9

How to Use This Section 9
Portals™ Service Menu Icon Tree for The Lord of the Rings™ Pinball 10-11
- Example 12-13

QUIT THIS SESSION (Exiting the Portals™ Service Menu) & Problem / Solution Table 14

Chapter 2, Go To Diagnostics Menu (Overview) 15

GO TO DIAGNOSTICS MENU 15
- **Go To Switch Menu ■■ Switch Test ■■ Active Switch Test ■■ Dedicated Switch Test** 16
  - Switch Matrix Grid & Dedicated Switches
  - Switch Matrix Grid Locations, Typical Switch Wiring & Schematic, Dedicated Switch Schematic 17
- **Go To Coil Menu ■■ Single Coil Test ■■ Cycling Coil Test** 18
  - Partial Coils Detailed Chart ...
  - Coil & Flash Lamp Locations, Typical Coil WIring, Bulb Types used for Flash Lamps 19
  - Coils Detailed Chart Table 20
  - Backbox I/O Power Driver Board Detailed Wiring Diagram 21
- **Go To Lamp Menu ■■ Single Lamp Test ■■ Test All Lamps ■■ Row & Column Lamp Tests** 22
  - Lamp Matrix Grid
  - Lamp Matrix Grid Locations, Typical Lamp Wiring & Schematic, Bulb Types used for Lamps 23
- **Test Flash Lamps ■ Clear Ball Trough** 24
- **Technician Alerts (Switch Detection and Pinball Detection)** 24-25
- **Service Phone # ■ Begin Play Test** 25
- **Fire Knocker ■ Sound / Speaker Test (Speaker Phase Testing) ■ Begin Burn In** 26
- **Dot Matrix Test (Dot Matrix Display Explained)** 26-27
- **LOTR Tests: Ring Magnet Test, LED Test & Balrog Test** 27-28
- **Go To Fuse Table (with Example)** 29

BACKBOX LAYOUT LOCATIONS: Fuses, Bridges, Relays & ROMs 30
- **Dr. Pinball ■■ Coil Flow Chart ■■ Switch Flow Chart ■■ Lamp Flow Chart** 31

Chapter 3, Go To Audits Menu (Overview) 33

- EARNINGS & STANDARD AUDIT TABLES 32

GO TO AUDITS MENU 33
- **Earnings Audits (01-14)** 33
- **Standard Audits (01-68)** 34-35
- **Feature Audits (01-154)** 36
- **Go To Printer Menu ■■ Quick Printout ■■ Full Printout ■■ Reset Printer** 37

Chapter 4, Go To Adjustments Menu (Overview) 39

- STANDARD & FEATURE ADJUSTMENT TABLES 38

GO TO ADJUSTMENTS MENU 39
- **Standard Adjustments (01-52)** 39-43
- **Feature Adjustments (01-34)** 44-46
- **Custom Message (Direct Access to Standard Adjustment 31)** 46

Chapter 5, Go To Installs Menu (Overview) 47

GO TO INSTALLS MENU 47
- **Install Extra Easy, Easy, Normal, Hard or Extra Hard** 47
- **Install Directors Cut ■ Install 3-Ball or 5-Ball ■ $.50 Competition ■ Free Play Competition**
- **Install Home Play ■ Film Star Reset ■ Install Novelty ■ Install Add-A-Ball ■ Install Factory** 48
  - Overview of Standard Adjustment Changes upon selectoin of an Install: 49
  - Overview of Feature Adjustment Changes upon selection of an Install: 49-50

Chapter 6, Go To Reset Menu (Overview) 51

GO TO RESET MENU 51
- **Reset Coin Audits ■ Reset Game Audits ■ Reset High Scores ■ Reset Credits ■ Factory Reset** 51
  - Example 52

Chapter 7, Go To Tournmament Menu 53

GO TO TOURNAMENT MENU (OPTIONAL USE ONLY) 53
- TOURNAMENT ADJUSTMENT TABLES & TOURNAMENT AUDIT TABLE 54
- **Tournament Adjustments (01-13)** 55
- **Start Tournament ■ Stop Tournament ■ Tournament Prizes ■ Tournament Audits (01-12)** 56
- **Tournament Audits Continued ■ Sign Messages A-B (Tournie Adj. 14-15)** 57

Service Switch Set (Red, Green & Black Buttons) Access & Use

The ***Service Switch Set*** provides access for ***three (3) functions*** available for your use. They are **Volume Menu**, **Service Credits Menu** and **Portals™ Service Menu**. All are accessed separately depending on which colored button (**Red**, **Green** or **Black**) is ***pushed first***.

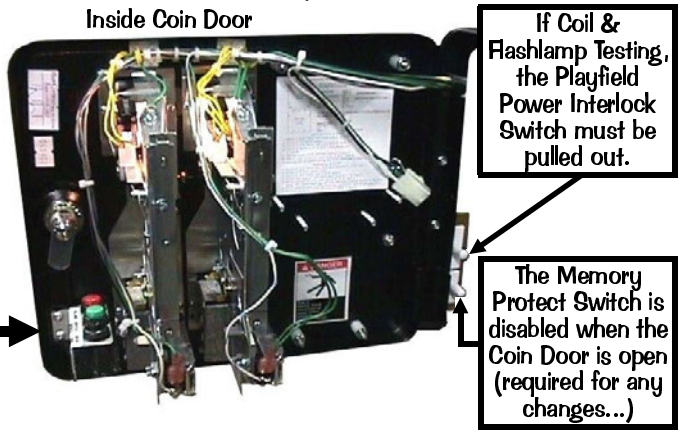

To access any of these ***three (3) functions*** you must first open the **Coin Door** (see pictorial above) with the Game in the ***Attract Mode*** *(not already in any Function or Menu stated below).*

Function 1, Volume Menu

Pushing the ***Red "VOLUME" Button*** first, enters the ***Volume Menu***. While in this Mode, to **DECREASE** the volume, hold down or depress the **Red "LEFT" Button** until desired the volume is achieved; to **INCREASE** the volume, hold down or depress the **Green "RIGHT" Button** until the desired volume is achieved.

Note: *Pushing the **Left** or **Right Flipper Buttons** operates the same as the **Red** or **Green Buttons** of the Service Switch Set, while in this Volume Mode.*

Set between **0-31**; Once your adjustments are made, this menu will ***automatically exit*** a few seconds after the last button depression.

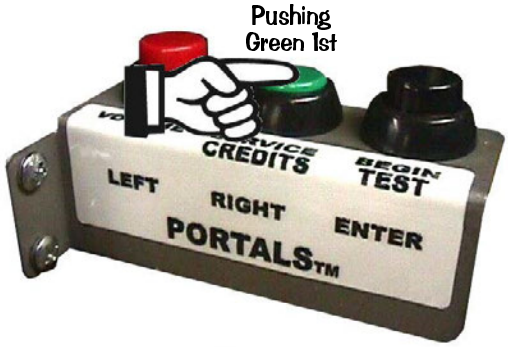

Function 2, Service Credits Menu

Pushing the ***Green "SERVICE CREDITS" Button*** first, adds ***Service Credits*** *(will not affect your audits as "paid" credits).* This is useful for the technician to test games in regular play without affecting the game audits. Each depression adds **1 credit**; up to **50 credits** can be applied. **Std. Adj. 16**, **Credit Limit**, determines this, however, it can be changed from 04-50; *for details see Chapter **4** of this Section **3***. Once your credits are added, this menu will ***automatically exit*** a few seconds after the last button depression.

Note: *This function is disabled if **Standard Adjustment 30**, **Free Play**, is set to **YES**. The Service Credits are limited to the Credit Limit in addition to any paid credits present in the game (e.g. If the Credit Limit is 30, and there are 8 paid credits present, only 22 Service Credits can be applied.).*

open Adjustments

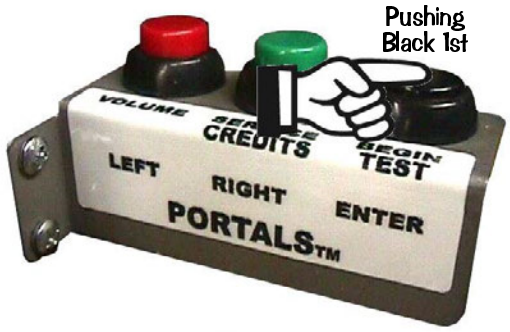

Function 3, Portals™ Service Menu

Pushing the ***Black "BEGIN TEST" Button*** first, enters the ***Portals™ Service Menu***. Once in, navigate through all menus depressing the **Red "LEFT"** or **Green "RIGHT" Buttons**.

Note: *Pushing the **Left** or **Right Flipper Buttons** operates the same as the **Red** or **Green Buttons** of the Service Switch Set, while in this Service Mode.*

Select or *activate* the *Icon* chosen *(the Icon will be "flashing")* by pushing down or depressing the **Black "ENTER" Button**.

Note: *Pushing the **Start Button** operates the same as the **Black Button** of the Service Switch Set, while in this Service Mode.*

Please read *the remainder of this Chapter for more information on the **Portals™ Service Menu**.*
*The remaining six (6) Chapters of this Section explains all **Icons & Menus** in detail.*
Read! Read! Read!

back to Page 8

Portals™ Service Menu Introduction

Important: The ***Dual Switch Bracket*** holds the ***Playfield Power Interlock*** & ***Memory Protect Switches***. It is located just inside the Coin Door frame *(see pictorial of the **Coin Door** on the previous page)*. The Button Switch at the top is the ***Playfield Power Interlock Switch***. It must be pulled out for electro-mechanical device testing or diagnostic purposes (this is required). If this button is pushed in, the ***Playfield Power*** is disabled while the **Coin Door** is **OPEN**. The Button Switch at the bottom is the ***Memory Protect Switch***. It is enabled while the **Coin Door** is **CLOSED**; *meaning any adjustment changes that are made **will not be written to memory***. If changing adjustments is required, ensure the **Coin Door** is **OPEN** to disable this switch, thus allowing for desired changes.

How to Use This Section

This section will cover all functions available in the **Portals™ Service Menu** in a *Step-By-Step* process. This section is divided into chapters which coincide with the **MAIN MENU**. The previous and following pages in this Chapter will instruct the operator on how to move through the Menus. It's simple, easy and fun to use!

To get into the **Service Menu Mode** review **"Function 3, Portals™ Service Menu"** on the previous page. After Power-Up, push down the **Black "BEGIN TEST" Button** to begin. Looking at the display you will momentarily see "**Service Menu**" with a *satellite flying from right to left pulling a banner* "**Portals©™**" followed by the **MAIN MENU**:

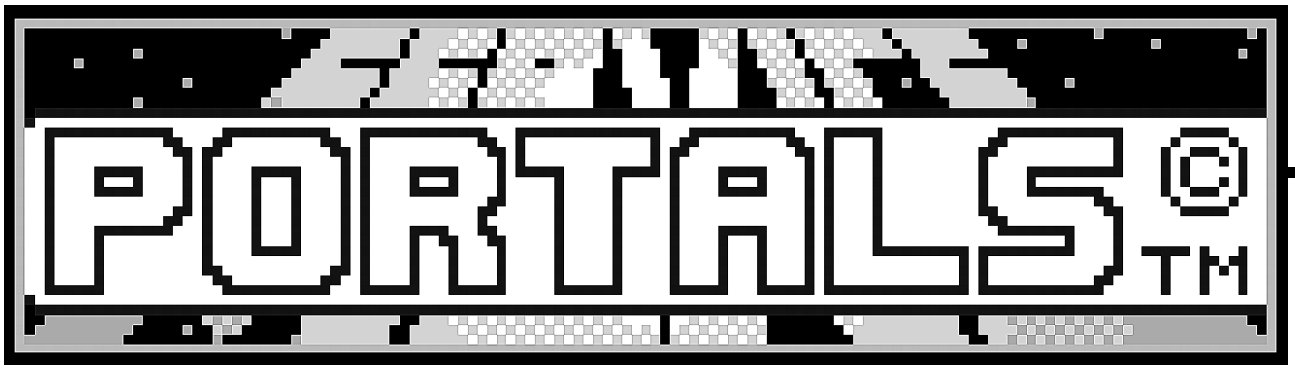

Use the **Red "LEFT" & Green "RIGHT" Buttons** (or **Left** & **Right Flipper Buttons**) to move the selected ***Icon*** left or right, and the **Black "ENTER" Button** (or **Start Button**) to activate the selected ***Icon***. The use of the Service Switch Set (**Red**, **Green**, & **Black Buttons**) *is required* in **Switch Test** or **Active Switch Test**, as the **Start & Flipper Buttons** are a part of this test.

The **MAIN MENU** now appears with the "DIAG" *Icon* (**GO TO DIAGNOSTICS MENU**) flashing:

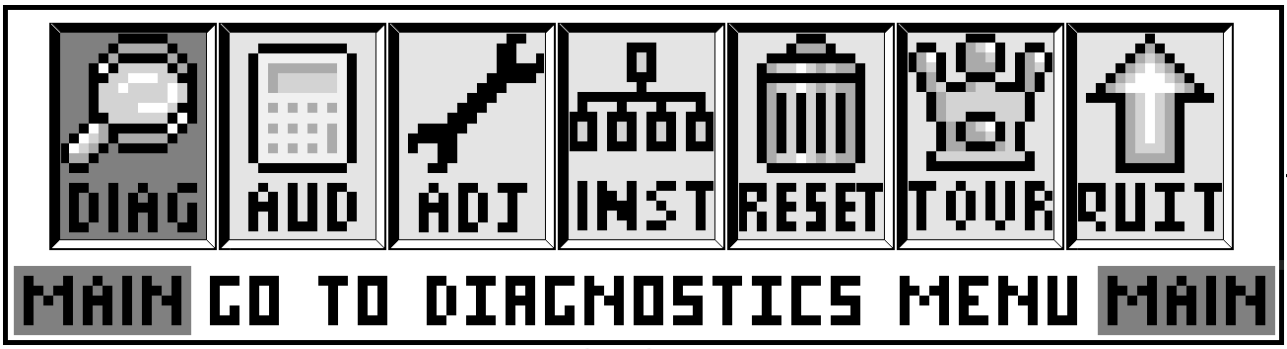

As the operator views the Menu Screen(s), the MORE MORE symbols indicates that there are more *Icons* to select in each direction. The *Icon* selected will blink. Pushing the **Black "ENTER" Button** (or **Start Button**) will select the *Icon* and the Menu Screen will change to the menu selected. Select the **"PREV"** *Icons* to move backwards through the menu levels. Select the **"QUIT"** *Icon* to completely exit the Service Mode.

View the **Portals™ Service Menu Icon Tree** on the next pages for a complete overview of all menus used in this system. The "HELP" *Icon* & "?" *Mini-Icon* provide explanation of **ICON** usage in the Menu where the "HELP" *Icon* or "?" *Mini-Icon* was selected. View **QUIT THIS SESSION** (**Exiting the Portals™ Service Menu**) at the end of this chapter *(reference Section **3**, Chapter **1**, **Portals™ Service Menu Introduction**)*.

The **chapters** in this **section**, which coincide with the **MAIN MENU**, will also provide more detailed information. ***Use both the manual and the display to help customize, troubleshoot and/or diagnose faults, if any.***

The Lord of the Rings Portals™ Service Menu Icon Tree

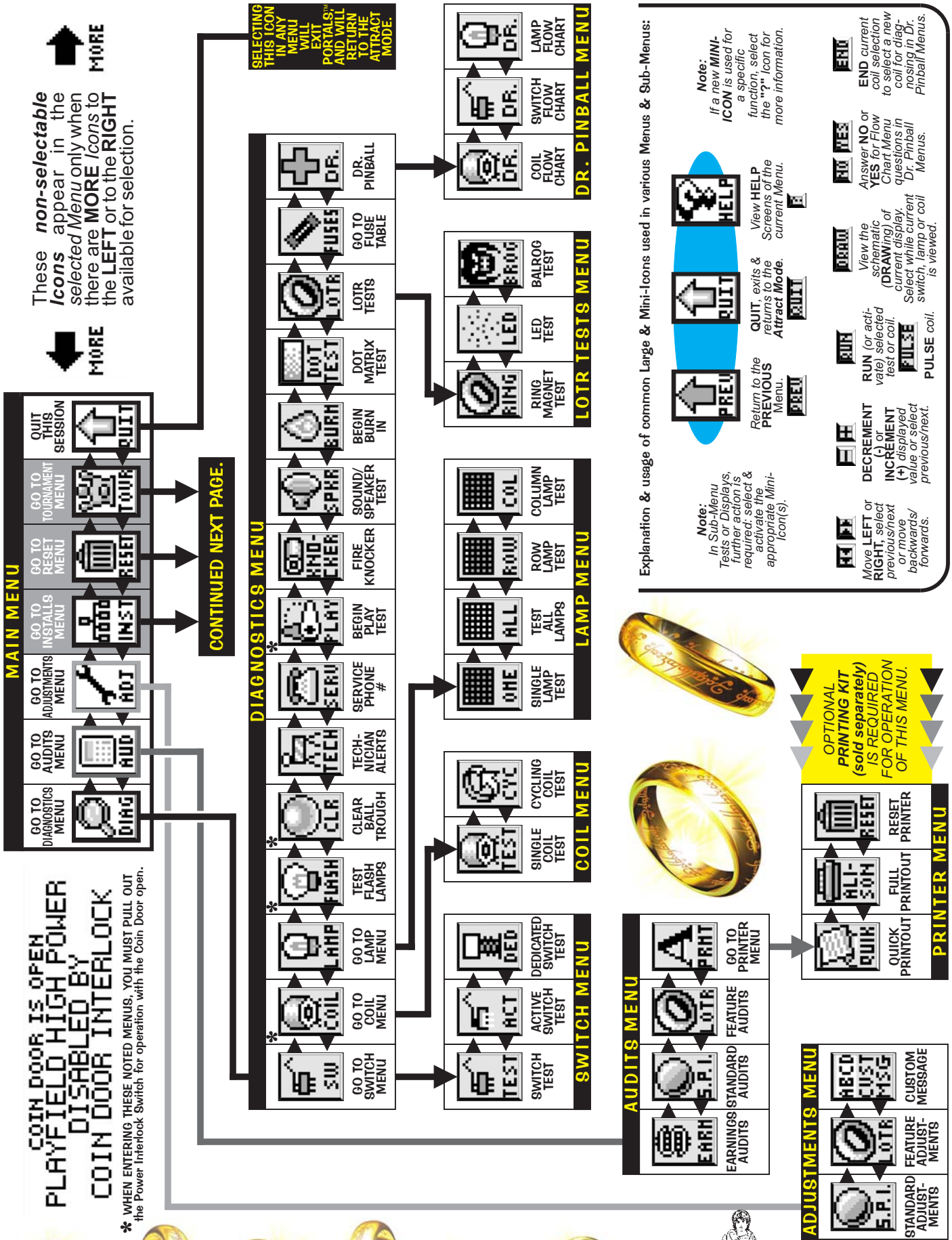

The Lord of the Rings Portals™ Service Menu Icon Tree Continued

Note: *After selection of any of the 1st* ***13 Install Icons****, the request is installed and returns to the* ***Install Menu****. The last icon activated before exiting this menu will supercede any previous Icon selected in the group.*

Note: *After selection of any of the 1st* ***4 Reset Icons****, the request is installed and returns to the* ***Reset Menu****. Selecting a "FACT" Icon, the request is installed and* ***exits the Portals™ Service Menu System****.*

SEE PREVIOUS PAGE.

MAIN MENU

GO TO DIAGNOSTICS MENU	GO TO AUDITS MENU	GO TO ADJUSTMENTS MENU	GO TO INSTALLS MENU	GO TO RESET MENU	GO TO TOURNAMENT MENU	QUIT THIS SESSION
DIAG	AUD	ADJ	INST	RESET	TOUR	QUIT

INSTALLS MENU

X.EZ	EASY	FACT	HARD	X.HD	DCUT	3BAL	5BAL	PAY	FREE	HOME	STAR	NOV	A.A.B	FACT
INSTALL EXTRA EASY	INSTALL EASY	INSTALL NORMAL	INSTALL HARD	INSTALL EXTRA HARD	INSTALL DIRECTORS CUT	INSTALL 3-BALL	INSTALL 5-BALL	$ .50 COMPETI-TION	FREE PLAY COMPETI-TION	INSTALL HOME PLAY	FILM STAR RESET	INSTALL NOVELTY	INSTALL ADD-A-BALL	INSTALL FACTORY

SELECTING THIS ICON IN ANY MENU WILL EXIT PORTALS™ AND WILL RETURN TO THE ATTRACT MODE.

RESET MENU

COIN	AUD	HSTD	CRED	FACT
RESET COIN AUDITS	RESET GAME AUDITS	RESET HIGH SCORES	RESET CREDITS	FACTORY RESET

AFTER FACTORY RESET IS INSTALLED, YOU WILL THEN EXIT PORTALS™ AND WILL RETURN TO THE ATTRACT MODE.

REQUEST INSTALLED

TOURNAMENT MENU

SET UP	STRT	END	PRIZ	AUD	A-B TEXT
TOURNAMENT ADJUST-MENTS	START TOURNA-MENT	STOP TOURNA-MENT	TOURNA-MENT PRIZES	TOURNA-MENT AUDITS	SIGN MESSAGES A-B

OPTIONAL ***TOURNAMENT KIT (sold separately)*** *IS REQUIRED FOR OPERATION OF THIS MENU.*

Chapter 2	Chapter 3	Chapter 4	Chapter 5	Chapter 6	Chapter 7
DIAG	AUD	ADJ	INST	RESET	TOUR

For more detailed information on these Menus, review Chapters 1-7 in this Section 3.

Portals™ Service Menu Example

This example will demonstrate activation of *Icons* in the **DIAGNOSTICS MENU**. The example will show activation of the "SW" *Icon* (**GO TO SWITCH MENU**). In this menu, the switches can be tested individually and also all active switches can be tested. Use the same technique to access all the *Icons* in the **Portals™ Service Menu**. Follow **Portals™ Service Menu Icon Tree** on the previous pages as a guide to help navigate through the entire system (Also, go to the chapter in this manual explaining the icon(s) selected.).

If the display is in any other menu other than the **MAIN MENU**, use the **Red "LEFT"** & **Green "RIGHT" Buttons** to select the "PREV" *Icon* and press the **Black "ENTER" Button** to *activate* the **ICON** thus moving back to the previous menu. Do so until **MAIN MENU** appears.

Chapters **2** through **7** will cover all menu items within the **Portals™ Service Menu**. The *Icon* is shown preceding the text. Find the *Icon* in the **Portals™ Service Menu** by navigating with the **Red** or **Green Buttons**. Each chapter started is from the **MAIN MENU**. Within the chapter, and Sub-Menu will be covered sequentially with their explanation & function. If the operator *"gets lost"*, select and *activate* the "PREV" *Icon* until the display indicates **MAIN MENU**. For more help on Button Usage, select & *activate* the "HELP" *Icon* or "?" *Mini-Icons.*

EXPLANATION & USAGE OF COMMON LARGE & MINI-ICONS USED IN VARIOUS MENUS & SUB-MENUS:

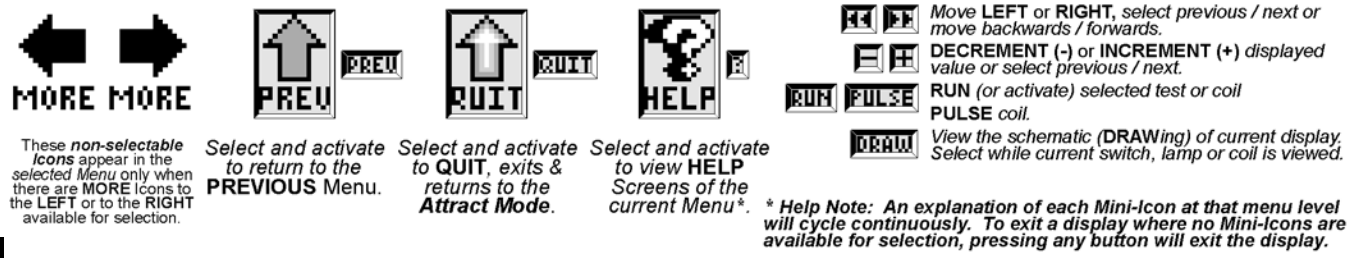

Example:

After entering **Portals™**, the **MAIN MENU** now appears with the **"DIAG"** *Icon* (**GO TO DIAGNOSTICS MENU**) flashing:

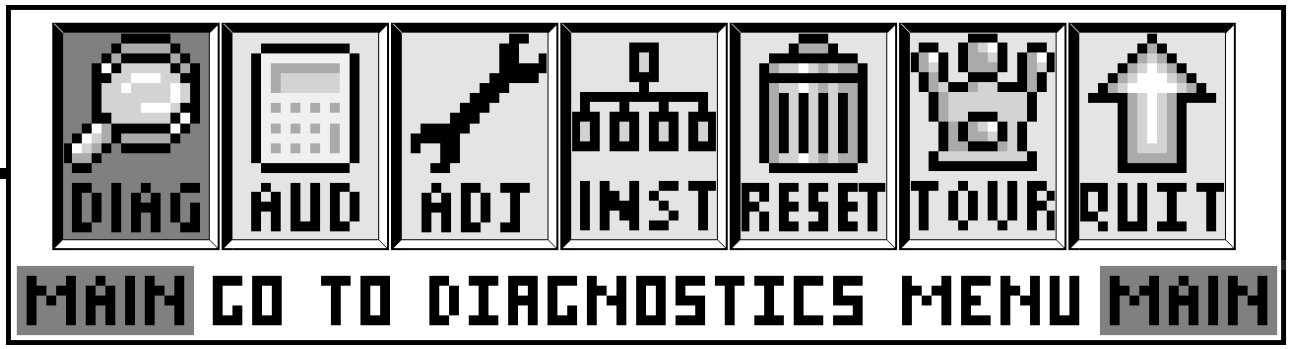

Press the **Black "ENTER" Button** to *activate* this **ICON**. The **DIAGNOSTICS MENU** now appears with the "SW" *Icon* (**GO TO SWITCH MENU**) flashing:

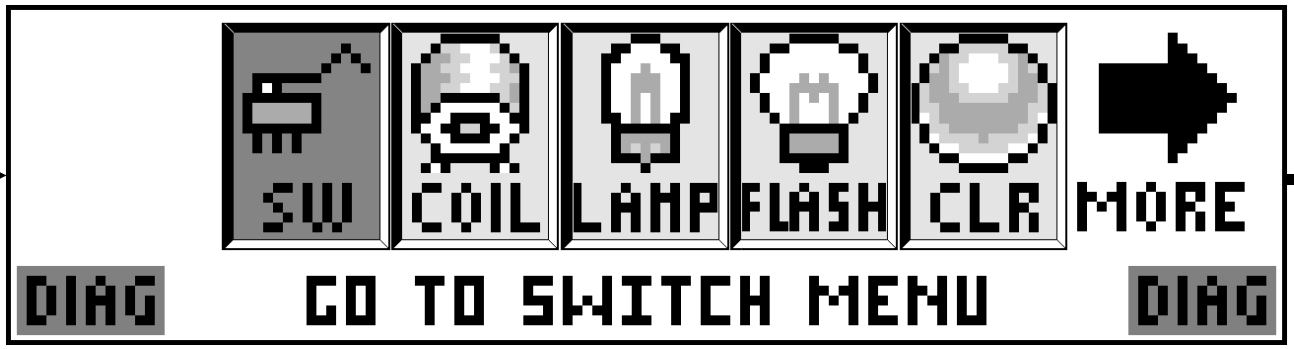

Press the **Black Button** to *activate* this **ICON**. The **SWITCH TEST MENU** now appears with the "TEST" *Icon* (**SWITCH TEST**) flashing:

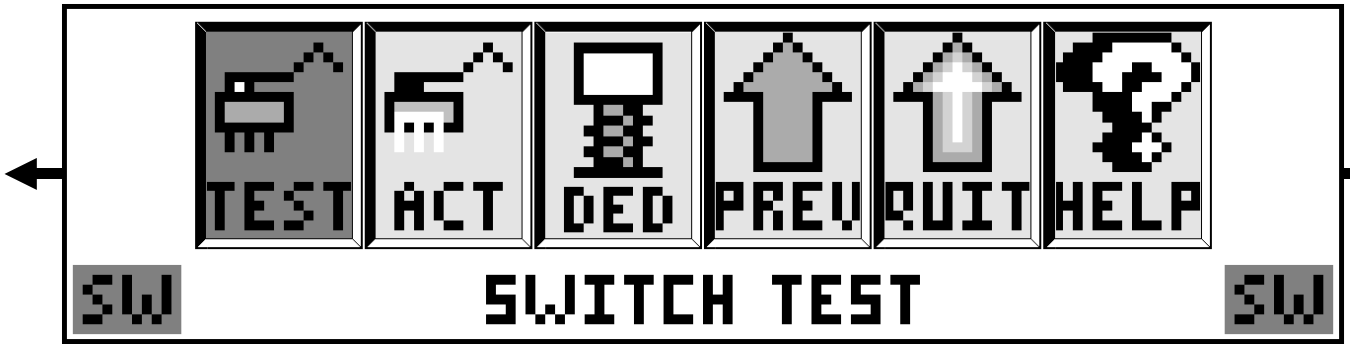

Press the **Black "ENTER" Button** to *activate* this icon. The **Switch Test Display** now appears.

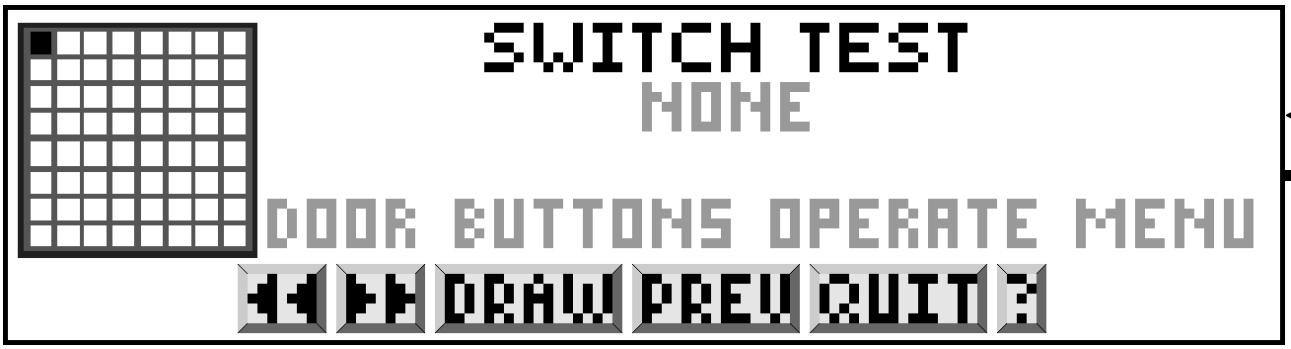

All switches can be tested one at a time. When possible, use a pinball to close any playfield switches; rolling the ball at Stand-Up Targets or over/under switches is suggested. Use finger for all non-playfield switches. As each switch is closed, the respective Switch Matrix Grid Position (1-64) will be lit.

To view the schematic for the switch selected, press either the **Red** or **Green Button** to select the "DRAW" *Mini-Icon*. Press the **Black Button** to *activate* this *Mini-Icon*; do so while the switch is momentarily closed. This will bring up the **Switch Schematic Display**. The display describes the switch in the Switch Matrix which includes the name of the switch, the Return (Row) Wire and the Drive (Column) Wire, drive transistor, and the "Pin-Outs" from the CPU/Sound Board. *Activating* the "DRAW" *Icon* when a switch is not closed, will give the generic switch schematic as shown below.

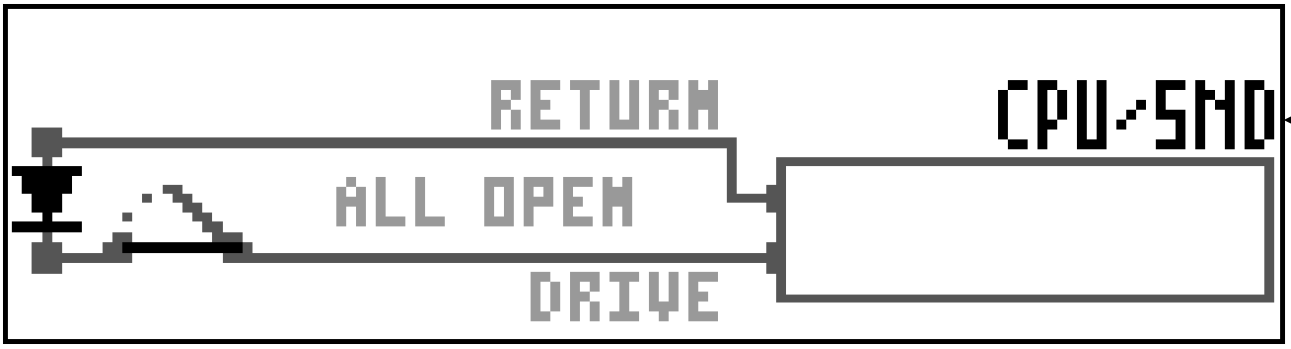

To ***exit any display where there are no Mini-Icons*** *(Schematics or Help Displays)*, ***press any button*** to return to the previous Menu.

While in **Switch Test** or **Active Switch Test**, the **Flipper & Start Buttons** are deactivated (because they can be part of these tests). Use the **Red "LEFT," Green "RIGHT"** and/or **Black "ENTER" Buttons** to select and *activate* the "**MINI-ICONS**" at the bottom of the display. In **Switch Test**, if the "<<" or ">>" *Mini-Icon* is *activated*, the display will go to (slip between) the previous tests *(Active & Dedicated Switch Tests).* Use either the **Red** or **Green Button** to select the "PREV" *Mini-Icon.* Press the **Black "ENTER" Button** to return to **Switch Test Menu**. To exit out of this Sub-Menu, select and *activate* the "PREV" *Icon* in the Menu. The **DIAGNOSTICS MENU** now appears with the "SW" *Icon* (**GO TO SWITCH MENU**) flashing. Go through other ***Diagnostics*** selections or exit.

To exit the **Portals™Service Menu**, select & *activate* the "QUIT" *Icon (see the next page).*

QUIT THIS SESSION (Exiting the Portals™ Service Menu)

In the **MAIN MENU** and in all **SUB-MENUS**, if the "QUIT" *Icon* or "QUIT" *Mini-Icon* is selected and *activated*, the **Portals™ Service Menu Session** will be exited and returned to the ***Attract Mode***.

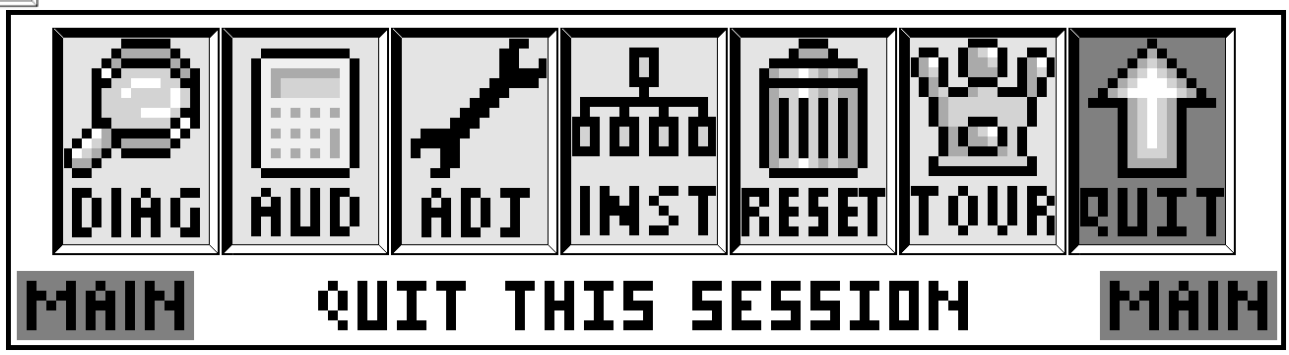

Exiting **Portals™** or turning game on/off will start the *Power-Up Routine.* Upon **Power-Up**, ***HOLD IN THE RIGHT FLIPPER BUTTON*** to view the CPU Game & Display Code Versions (+ Check-Sums), followed by the Location & Game ID Numbers and Alerts, if any *(see Sec. **3**, Chp. **2**, **GO TO DIAGNOSTICS MENU**, **Technician Alerts**).*

The below **Problem** / **Solution Table** was designed to answer some common problems frequently asked.

Problem / Solution Table

PROBLEM	SOLUTION
Will not enter the **Service Mode** after depressing the **Black "BEGIN TEST" Button**.	• Check the Service Switch(es) (**Red, Green & Black Buttons**) for loose connections or bad Ground. • Check the associated wiring harness to/from the CPU/Sound Board, Connector **CN6**. • Check CPU/Sound Board for possible failure.
All Service Buttons (**Red, Green** and **Black**) appear nonfunctional.	• Check the Service Switches wiring harness for poor or no connection and/or broken wires.
The **Green Service Button** in the Attract Mode will not enter the **SERVICE CREDITS MENU** to add Service Credits.	• Check to make sure the Game is not in "**Free Play**." *If the game is set to Free Play, adding Service Credits is not required.* • Check the Service Switches wiring harness for poor or no connection and/or broken wires.
The **Display** "blanks out."	• Check the Dot Matrix Display for loose wiring harness for poor or no connection and/or broken wires. • Check **F1** (3/4A Fuse) on the Display Power Supply Board. Refer to Section **5**, Chapter **4**, **SCHEMATICS & TROUBLESHOOTING**.
Icons *"scroll"* along continuously in the **MAIN MENU**.	• Check for a stuck switch on the **Green Button**. • If the Service Switch Set and/or the Coin Door was replaced, ensure the Locking Mechanism on the **Green Button** was removed. If the Green Button "clicks" and locks into an up/down position, the **Green Button** has this lock switch. Remove it. (Ref. to Svc. Bulletin #74.)
The **Start** and **Flipper Buttons** do not select or activate *Icons* in the **SWITCH TEST MENU**.	• This is normal. These switches are deactivated, as they are a part of the Switch Test. Use the **Red "LEFT"** or **Green "RIGHT" & Black "ENTER" Buttons** in this Sub-Menu. Refer to Section **3**, Chapter **2**, **GO TO DIAGNOSTICS MENU**, **Switch Test**.
Can't move selection of *Icon* with the **Left** and/or **Right Flipper Buttons**.	• Check the **Flipper Buttons** for loose connections or bad Ground and refer to Section **5**, Chapter **2**, Playfield Wiring, #-Flipper Circuit Wiring Diagram. • This is normal ***only*** in ***Diagnostic's Switch & Active Switch Tests*** *(see previous Problem).*
Some *Icons* appear non-functional in the **PRINTER MENU(S)**.	• If no printing equipment is connected, the "-" *Icon*, "+" *Icon* and "RUN" *Icon* will appear not to function. Refer Section **3**, Chapter **3**, **GO TO PRINTER MENU**.
Some *Icons* appear non-functional in the **GAME SPECIFIC MENU** under the **DIAGNOSTICS MENU**.	• If there is no other test under this Menu, the "<<" & ">>" *Mini-Icons* will appear not to function. The remaining *Icons* should function as normal. ***Note:*** *If there is no "Go To (Game Name) Test(s), the "GAME NAME" Icon will not invoke another display.*
The display returns to the **ATTRACT MODE** exiting the Service Session after a **FACTORY RESET**.	• This is normal. After a **FACTORY RESET**, the Service Session is automatically exited. Refer to Section **3**, Chapter **6**, **GO TO RESET MENU**, **Factory Reset**.
In **COIL TEST MENU**, the coils and flashlamps ***do not*** fire after activating the "RUN" *Icon*.	• Ensure the **POWER INTERLOCK SWITCH** ***is pulled out*** *(see the start of this Chapter).*
In **ADJUSTMENTS MENU**, with the Coin Door **CLOSED**, adjustments are not getting changed as desired (using the **Flipper** & **Start Buttons**).	• This is normal. The ***Memory Protect Switch*** is enabled when the Coin Door is **CLOSED**. Changes can be made with the Coin Door **OPEN** only.
In **Portals™ Service Menu**, the volume cannot be adjusted with the **Red** or **Green Buttons**.	• The Volume adjustment can only be made when in the **Attract Mode**. The **Volume Mode** is entered by pressing the **Red "VOLUME" Button**. Then use the **Red "LEFT"** to decrease / decrement (-) or **Green "RIGHT" Button** to increase / increment (+) the volume.
In **Portals™ Service Menu**, the display seems to lock up, or the Help Display appears to be non-functional.	• If you cannot clear the situation by exiting back one Menu, exit completely out of the **Portals™ Service Menu**, and re-enter. If the problem persists, call Technical Support for additional help.

Go To Diagnostics Menu

Overview

The **Portals™ Service Menu System** provides tests for sounds, display, lamps, switches and coils. Each feature may be tested manually or automatically after entering the **Portals™ Service Menu** *(see Chapter **1** of this Section)*. The automatic tests (e.g. **Cycling Coils**, **Test Flash Lamps**) may be used for a quick verification of automatic test functions and the manual tests (**Begin Play Test**, **Single Lamp** / **All** / **Row** / **Column Tests**, and **'Game Name' Tests**) may be used for troubleshooting. All *Icons* and there usages are explained throughout this chapter in order.

Important: *Upon **Power-Up** (Game Reset) or opening the **Coin Door** watch the **Display** for any **Alerts.****

OPEN THE DOOR

If this ***display flashes***, the game is indicating that **CMOS RAM** memory (CPU Loc. U212) has been corrupted. This is caused be either failure in memory *(e.g. batteries are dead and/or faulty **RAM**)* or upon installation of updated version of game code. Opening the **Coin Door** will initiate a *Factory Restore (Reset)*, by opening the ***Memory Protect Switch***. Check battery voltage at **VBATT Test Point** on the **CPU/Sound Bd.** *(more details in Sec. **5**, Chp. **4**, **PCBs**).*

COIN DOOR IS OPEN
PLAYFIELD HIGH POWER
DISABLED BY
COIN DOOR INTERLOCK

This ***flashing display*** is shown immediately upon opening the **Coin Door** as a reminder that **20v/50v DC** power to the playfield is **disabled**. All electro-mechanical devices *(such as Coils)* ***cannot be tested*** with the switch pushed in. **PULL OUT** the **Power Interlock Switch** ***ONLY*** if you're in a ***Testing Menu*** requiring power. See ***Access & Use*** in Chapter **1** of this Section for the location of this switch. *Closing the **Coin Door** will automatically reset this switch.*

OPERATOR ALERT!
#2 AUTO LAUNCH
COIL MALFUNCTION

This ***display*** is shown momentarily during **Game Mode** or **Power-Up** to alert the operator of a coil malfunction *(coil doesn't energize or coil fires a multiple number of times)*. **OPERATOR ALERT!** works by monitoring any *switch activated coil* that has the potential to trap a ball when disabled *(more details in this Chapter, **Technician Alerts**, **Pages 24-25**).*

PLEASE CHECK
TECH REPORT
PORTALS->DIAG->TECH

* If this ***Tech Report Alert flashes*** *(along with an audible sound)*, the game has detected faulty switches and/or missing pinballs. Select the "TECH" *Icon* for information *(review **Technician Alerts**, **Pages 24-25**).*
** For this **Alert display** to appear, Standard Adj. **49**, **must be changed** to **POWERUP**, **COIN DOOR** or **POWERUP AND COIN DOOR**, the default is **NEVER** (review Section **3**, Chp. **4**, **GO TO ADJUSTMENTS MENU**, Standard Adjustments, Page **44**).*

⚠ **CAUTION:** Remove all pinballs from the Ball Trough prior to lifting the playfield to it's full upright position for servicing. **PULL OUT** the **Power Interlock Switch** for operation. To eject pinballs, select the "DIAG" *Icon* from the **MAIN MENU** to go to the **DIAGNOSTICS MENU**, then select the "CLR" *Icon* to enter the **CLEAR BALL TROUGH MENU**. Select the "RUN" *Mini-Icon* and press the **Black "ENTER" Button** *or* **Start Button** to remove one pinball at a time *(this feature also useful to retrieve a pinball for game testing in **Begin Play Test** & **Game Specific Tests**).*

EXPLANATION & USAGE OF COMMON LARGE & MINI-ICONS USED IN VARIOUS MENUS & SUB-MENUS:

These ***non-selectable Icons*** appear in the *selected Menu* only when there are **MORE** Icons to the **LEFT** or to the **RIGHT** available for selection.

Select and activate to return to the **PREVIOUS** Menu.

Select and activate to **QUIT**, *exits & returns to the* ***Attract Mode***.

Select and activate to view **HELP** *Screens of the current Menu*.*

Select and activate to:

- *Move* **LEFT** or **RIGHT**, *select previous / next or move backwards / forwards.*
- **DECREMENT (-)** or **INCREMENT (+)** *displayed value or select previous / next.*
- **RUN** *(or activate) selected test or coil*
- **PULSE** *coil.*
- *View the schematic (***DRAW***ing) of current display. Select while current switch, lamp or coil is viewed.*

**** Help Note: An explanation of each Mini-Icon at that menu level will cycle continuously. To exit a display where no Mini-Icons are available for selection, pressing any button will exit the display.***

GO TO DIAGNOSTICS MENU

After entering **Portals™**, the **MAIN MENU** now appears. To initiate, from the **MAIN MENU**, select the "DIAG" *Icon* with either the **Red "LEFT"** or **Green "RIGHT" Buttons** (the **Flipper Buttons** operates in the same manner) and press the **Black "ENTER" Button** (the **Start Button** operates in the same manner). The **DIAGNOSTICS MENU** appears. Continue through this chapter for the explanation & usage of the *Icons* in the **DIAGNOSTICS MENU**. ***Usage Note:*** *Only in Switch & Active Switch Tests, the **Flipper & Start Buttons cannot be used** as the alternate navigation buttons as they are a part of these tests.* After exiting these tests, the **Left** & **Right Flipper** and **Start Buttons** can once again be used. Continue through this chapter for the explanation & usage of the *Icons* in the **DIAGNOSTICS MENU**.

Go To Switch Menu

To initiate, from the **DIAGNOSTICS MENU**, select the "SW" *Icon* with either the **Red "LEFT"** or **Green "RIGHT" Buttons** and press the **Black "ENTER" Button**. Switches are configured in an 8 x 8 Matrix of Columns (Switch Drives) and Rows (Switch Returns) with up to **64** possible switches. The **SWITCH TEST MENU** consists of three (3) parts: **Switch Test**, **Active Switches** & **Dedicated Switch Test**. ***Reminder:*** *The **Flipper & Start Buttons** (part of Switch Tests) cannot be used as **navigation buttons** during these test(s)*

Switch Test

To initiate, from the **SWITCH MENU**, select the "TEST" *Icon* with either the **Red** or **Green Buttons** & press the **Black Button**. In **Switch Test**, close each switch and observe the display. The display will describe the switch in the Switch Matrix Grid *(below),* which includes the switch name, Return (Row) Wire, Drive (Column) Wire and the "Pin-Outs" from the **CPU/Sound Board**. When the switch is closed, the information if displayed momentarily. To view the schematic for the switch selected, press either the **Red** or **Green Button** to select the "DRAW" *Mini-Icon*. Press the **Black Button** to *activate* this *Mini-Icon*; do so while the switch is momentarily closed. To return to **Switch Test**, press the **Black Button** again.

Active Switch Test

To initiate, from the **SWITCH MENU**, select the "ACT" *Icon* with either the **Red** or **Green Buttons** & press the **Black Button**. If still in a previous test, select the "PREV" *Mini-Icon* to return to **SWITCH MENU** or select either of the "<<" or ">>" *Mini-Icons* to move through the tests. In **Active Switch Test**, if any switches are stuck closed *(or made from the presence of a pinball),* the display sequences through the Switch Names, Return (Row) Wire, Drive (Column) Wire, Drive Transistor, Part Number and the "Pin-Outs" from the **CPU/Sound Board**. This cycle continues until all switches are cleared or until the test is exited.

Dedicated Switch Test

To initiate, from the **SWITCH MENU**, select the "DED" *Icon* with either **Flipper Button** & press the **Start Button** *(the Service Switches are deactivated during this test.).* In **Dedicated Switch Test**, the display will describe the switch which includes the Switch Name, Return (Row) Wire, Drive (Column) Wire, Part Number and the "Pin-Outs" from the **CPU/Sound Board**.

SWITCH MATRIX GRID & DEDICATED SWITCHES

Row (Return) / Column (Drive)	1: Q1 GRN-BRN CN5-P1	2: Q2 GRN-RED CN5-P3	3: Q3 GRN-ORG CN5-P4	4: Q4 GRN-YEL CN5-P5	5: Q5 GRN-BLK CN5-P6	6: Q6 GRN-BLU CN5-P7	7: Q7 GRN-VIO CN5-P8	8: Q8 GRN-GRY CN5-P9
1: U400 WHT-BRN CN7-P9	1 Cabinet Side LT BUTTON (UK ONLY) 180-5160-00	9 Below P/F LEFT VUK (DOTS) 180-5116-01	17 Above P/F SWORD LOCK HIGH 180-5119-02	25 Above P/F RIGHT RAMP ENTER (DOTS) 180-5010-01	33 Mini-P/F MINI PF U.L. 180-5057-00	41 Below P/F TOP VUK *See Sw. 41 Note*	49 Below P/F LEFT BUMPER 180-5015-03	57 Below P/F LEFT OUTLANE 500-6227-02
2: U400 WHT-RED CN7-P8	2 Coin Door 4TH COIN SLOT 180-5204-00	10 Below P/F STANDUP 515-6027-08	18 Above P/F SWORD LOCK MID 180-5119-02	26 NOT USED	34 Mini-P/F MINI PF U.R. 180-5057-00	42 Above P/F INNER LOOP 180-5190-28	50 Below P/F RIGHT BUMPER 180-5015-03	58 Below P/F LEFT RETURN LANE 500-6227-02
3: U400 WHT-ORG CN7-P7	3 Coin Door 6TH COIN SLOT *Future Use*	11 Below P/F 4-BALL TROUGH #1 (LEFT) 180-5119-02	19 Above P/F SWORD LOCK LOW 180-5119-02	27 NOT USED	35 Mini-P/F MINI PF L.L. 180-5057-00	43 Below P/F LEFT TOP LANE 500-6227-02	51 Below P/F BOTTOM BUMPER 180-5015-03	59 Below P/F LEFT SLINGSHOT 180-5054-00 (x2)
4: U400 WHT-YEL CN7-P6	4 Coin Door RIGHT COIN SLOT 180-5204-00	12 Below P/F 4-BALL TROUGH #2 180-5119-02	20 Below P/F RIGHT ORBIT LOW 500-6227-02	28 Above P/F BALROG HIT 180-5119-00	36 Mini-P/F MINI PF L.R. 180-5057-00	44 Below P/F MIDDLE TOP LANE 500-6227-02	52 Above P/F SPINNER 180-5190-28	60 Below P/F RIGHT OUTLANE 500-6227-02
5: U401 WHT-GRN CN7-P5	5 Coin Door CENTER COIN SLOT / DBA 180-5204-00	13 Below P/F 4-BALL TROUGH #3 180-5119-02	21 Above P/F RIGHT ORBIT HI 180-5190-28	29 Below P/F PALANTIR 515-5162-08	37 Below P/F LEFT ORBIT LOW 500-6227-02	45 Below P/F RIGHT TOP LANE 500-6227-02	53 Below P/F SPOT RING 515-5162-08	61 Below P/F RIGHT RETURN LANE 500-6227-02
6: U401 WHT-BLU CN7-P3	6 Coin Door LEFT COIN SLOT 180-5204-00	14 Below P/F 4-BALL TROUGH VUK OPTO *See Sw. 14 Note*	22 Above P/F RAIL RAMP EXIT 180-5197-00	30 Below P/F RIGHT VUK (DOTS) 180-5116-01	38 Below P/F LEFT ORBIT HI 500-6227-02	46 Below P/F TOP SAUCER 180-5186-00	54 In Cabinet START BUTTON 180-5174-00	62 Below P/F RIGHT SLINGSHOT 180-5054-00 (x2)
7: U401 WHT-VIO CN7-P2	7 Coin Door 5TH COIN SLOT *Future Use*	15 Below P/F 4-BALL STACKING OPTO *See Sw. 15 Note*	23 Above P/F RIGHT RAMP TARGET 515-6027-08	31 Below P/F BALROG OPEN 180-5119-02	39 Below P/F LEFT RAMP ENTER 500-6227-02	47 Back Panel RING MADE *See Sw. 47 Note*	55 In Cabinet TOURNAMENT START 180-5174-00	63 NOT USED
8: U401 WHT-GRY CN7-P1	8 Cabinet Side RT BUTTON (UK ONLY) 180-5160-00	16 Below P/F SHOOTER LANE 180-5157-00	24 Above P/F RIGHT RAMP MADE 180-5198-00	32 Below P/F BALROG CLOSED 180-5119-02	40 Above P/F LEFT RAMP MADE 180-5010-01	48 Back Panel BACK TROUGH 180-5057-00	56 In Cabinet PLUMB BOB TILT *See Sw. 56 Note*	64 NOT USED

GROUND / IC U206 INPUTS	GROUND BLK CN6-P1, -P11
1: U206 GRY-BRN CN6-P2	DS-1 on Cabinet Side #1 LEFT FLIPPER BUTTON 180-5160-00
2: U206 GRY-RED CN6-P3	DS-2 Below Playfield #2 LEFT FLIPPER E.O.S (End-of-Stroke) 180-5149-00 *on Flipper*
3: U206 GRY-ORG CN6-P4	DS-3 on Cabinet Side #3 RIGHT FLIPPER BUTTON 180-5160-00
4: U206 GRY-YEL CN6-P6	DS-4 Below Playfield #4 RIGHT FLIPPER E.O.S. (End-of-Stroke) 180-5149-00 *on Flipper*
5: U206 GRY-GRN CN6-P7	DS-5 NOT USED
6: U206 GRY-BLU CN6-P8	DS-6 on Coin Door #6 VOLUME (RED BUTTON) (In Test: LEFT) 180-5192-02
7: U206 GRY-VIO CN6-P9	DS-7 on Coin Door #7 SERV. CRED. (GREEN BUTTON) (In Test: RIGHT) 180-5192-04
8: U206 GRY-BLK CN6-P10	DS-8 on Coin Door #8 BEGIN TEST (BLACK BUTTON) (In Test: ENTER) 180-5192-00

SWITCH MATRIX GRID LOCATIONS

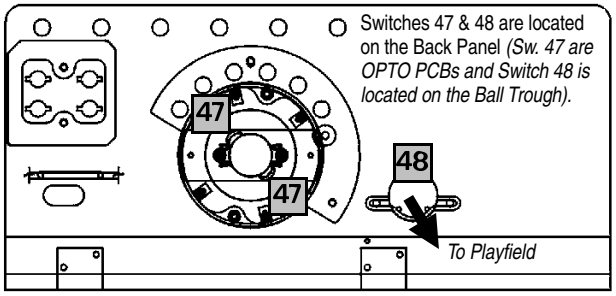

◀ Backpanel ▼

Mini-Upper Playfield ▶ shown moved off the Main Playfield for clarity.

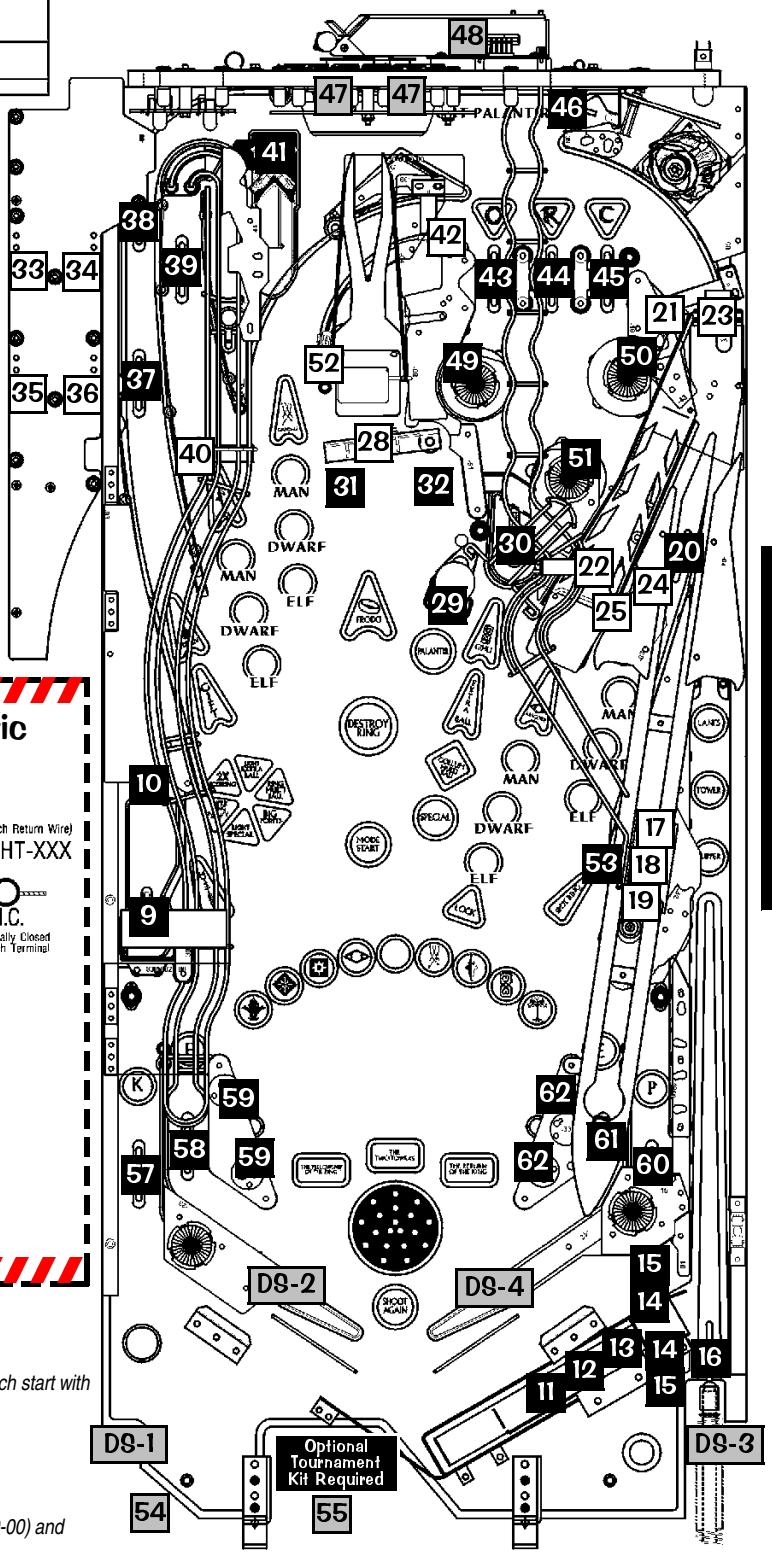

Typical Switch Wiring & Schematic

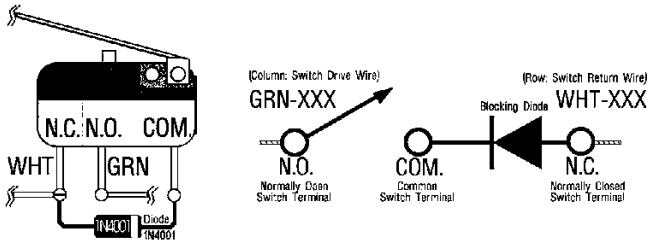

Dedicated Switch Schematic

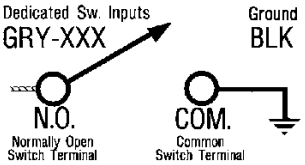

= Switches above Playfield. = Switches below Playfield.

= Switches not on Playfield.

Switch Part Notes: *¥ Yen Coin Switch is 180-5091-00. Part Numbers which start with 515- or 500- include the bracket, target, and/or housing.*

Sw. 14, 15, 41 & 47 Part Note: *OPTO PC Boards are used as Switches: Trans.: 515-0173-00 (Sw. 14 & 15); Receiver: 515-0174-00 (Sw. 14 &15); Transmitter 515-7307-00 (Sw. 41); Rec. 515-7308-00 (Sw. 41); Transmitter 500-6746-00 (Sw. 47); Receiver 500-6747-00 (Sw. 47);*

Sw. 56 Part Note: *The Switch is comprised of a Hanger Bracket (535-5319-00) and Contact Wire (535-7563-01) located in the Cabinet.*

Some Switch Diodes may be located under the playfield, in the Cabinet or Backbox *on Terminal Strips* ***or*** *Diode Boards and not on the assemblies.* **DOTS:** D iode O n T erminal S trip, *see Section* ***5,*** *Chapter* ***2,*** ***Playfield Wiring.***

▲ Playfield

Go To Coil Menu

To initiate, from the **DIAGNOSTICS MENU**, select the "COIL" *Icon* with either the **Red "LEFT"** or **Green "RIGHT" Buttons** and press the **Black "ENTER" Button**. The coils are listed in groups. Coils **01-16** are typically High Current Coils *(although Low Current Coils may be used in these positions & will be noted).* Coils **17-32** are typically Low Current Coils. Flash Lamps are typically used in positions **25-32** *(although may be used in any position & will be noted).*

```
COIN DOOR IS OPEN
PLAYFIELD HIGH POWER
DISABLED BY
COIN DOOR INTERLOCK
```

PULL OUT the Power Interlock Switch for operation with the Coin Door open.

Important: *The Partial Coils Detailed Chart Table is used as a reference against the Coil & Flash Lamp Locations on the next page. For the* ***complete*** *Coils Detailed Chart Table, see the reverse of the following page. The Chart is shown to compare against the Backbox I/O Power Driver Board Detailed Wiring Diagram (shown again in Sec.* ***5****, Chapter* ***1****,* ***Playfield Wiring****. For more on troubleshooting and diagnosing, see Sec.* ***5****, Chapter* ***4****,* ***Printed Circuit Boards****.*

Single Coil Test

To initiate, from the **COIL MENU**, select the "TEST" *Icon* with either the **Red** or **Green Buttons** and press the **Black Button**. Ensure the **Power Interlock Switch** is pulled out. Select either the "-" or "+" *Mini-Icons*. Start with the "+" *Mini-Icon* to start the manual **Single Coil Test** from #1 *(the test runs through all Coils and Flash Lamps #1-#32 & Optional UK Only Auxiliary Positions AUX 1-3).* Press the **Black Button** on the "+" *Mini-Icon*, as each coil is selected, the display will describe the Coil or Flash Lamp Name with the corresponding number, the wire with colors, the "Pin-Outs" from the I/O Power Driver Board, the Coil Voltage and Gauge-Turns *(e.g. 23-800).* Press the **Black Button** again to move forward in the test. To test and view a particular Coil or Flash Lamp, select the "RUN" *Mini-Icon* and press the **Black Button**. Each time the **Black Button** is pushed, the Coil or Flash Lamp will fire on the Playfield and/or Backbox, with the display indicating the Coil or Flash Lamp information. Continue with the same procedure to run through the entire test.

Cycling Coil Test

To initiate, from the **COIL MENU**, select the "CYC" *Icon* with either the **Red** or **Green Buttons** and press the **Black Button**. If still in a previous test, select the "PREV" *Mini-Icon* to return to **COIL MENU** or select either of the "<<" or ">>" *Mini-Icons* to move to **Cycling Coil Test** *(selecting again will return to* ***Coil Test****).* The test pulses each regular Coil or Flash Lamp sequentially *(cycling)* on the Playfield and in the Backbox *(if Coils are used).* The display indicates **CYCLING COILS**.

↻ **Coil Note:** ↻ Either -00**B** *or* -00**T** can be used for coil replacements. *B/T listed is preferable for easier diode access & may differ on game.*

PARTIAL COILS DETAILED CHART ...

High Current Coils Group 1		Drive Transistor	Coil GA-Turn or Bulb Type
#1	TROUGH UP-KICKER	Q1	26-1200 ↻ 090-5044-00T
#2	AUTO LAUNCH	Q2	24-940 ↻ 090-5036-00T
#3	LEFT VUK	Q3	26-1200 ↻ 090-5044-00B
#4	TOP VUK	Q4	26-1200 ↻ 090-5044-00B
#5	RIGHT VUK	Q5	26-1200 ↻ 090-5044-00B
#6	RING MAGNET	Q6	20½-480 ↻ 090-5064-02
#7	RIGHT TOWER (D O TS)	Q7	23-800 090-5001-NL
#8	LOOP DIVERTER	Q8	22-1080 ↻ 090-5032-00T

Diode **O**n **T**erminal **S**trip (if noted)

High Current Coils Group 2		Drive Transistor	Coil GA-Turn or Bulb Type
#9	LEFT BUMPER	Q9	26-1200 ↻ 090-5044-00T
#10	RIGHT BUMPER	Q10	26-1200 ↻ 090-5044-00T
#11	BOTTOM BUMPER	Q11	26-1200 ↻ 090-5044-00T
#12	NOT USED	Q12	
#13	ORBIT PIN	Q13	26-1200 ↻ 090-5044-00B
#14	FLASH: HELMS DEEP RT	Q14	#906 Bulb 165-5004-00
#15	LEFT FLIPPER (50v RED/YEL)	Q15	22-900 ↻ 090-5020-20T
#16	RIGHT FLIPPER (50v RED/YEL)	Q16	22-900 ↻ 090-5020-20T

Low Current Coils Group 1		Drive Transistor	Coil GA-Turn or Bulb Type
#17	LEFT SLINGSHOT	Q17	23-800 ↻ 090-5001-00T
#18	RIGHT SLINGSHOT	Q18	23-800 ↻ 090-5001-00T
#19	TOP SAUCER	Q19	26-1200 ↻ 090-5044-00B
#20	BALROG MOTOR RELAY	Q20	DC Relay 520-5066-00
#21	SWORD LOCK RELEASE	Q21	27-1500 ↻ 090-5004-00T
#22	BALROG MOTOR	Q22	Motor 041-5088-01
#23	FLASH: HELMS DEEP LT	Q23	#906 Bulb 165-5004-00
#24	OPTIONAL COIL	Q24	Opt. 5v

Low Current Coils Group 2		Drive Transistor	Coil GA-Turn or Bulb Type
#25	FLASH: POPS X3	Q25	#906 Bulb 165-5004-00
#26	FLASH: RING	Q26	#906 Bulb 165-5004-00
#27	FLASH: BACK PANEL	Q27	#906 Bulb 165-5004-00
#28	NOT USED	Q28	
#29	FLASH: RINGWRAITH	Q29	#906 *Red* 165-5004-02
#30	FLASH: SWORD	Q30	#906 Bulb 165-5004-00
#31	FLASH: DESTROY THE RING	Q31	#89 Bulb 165-5000-89
#32	FLASH: BALROG	Q32	#89 Bulb 165-5000-89

Auxiliary (UK ONLY)	Drive Transistor	Coil GA-Turn
AUX 1: LEFT UP/DOWN POST	Q1	26-1200 ↻ 090-5044-00T
AUX 2: CENTER UP/DOWN POST	Q2	23-1100 ↻ 090-5030-00T
AUX 3: RIGHT UP/DOWN POST	Q3	26-1200 ↻ 090-5044-00T

COIL & FLASH LAMP LOCATIONS

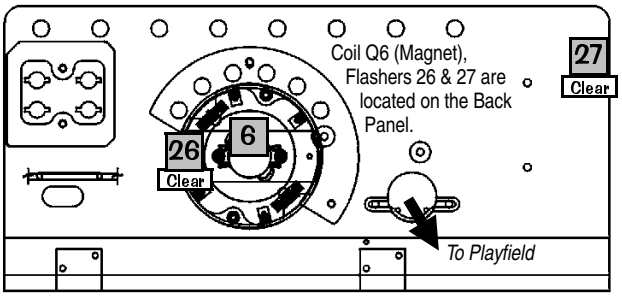

◀ Backpanel

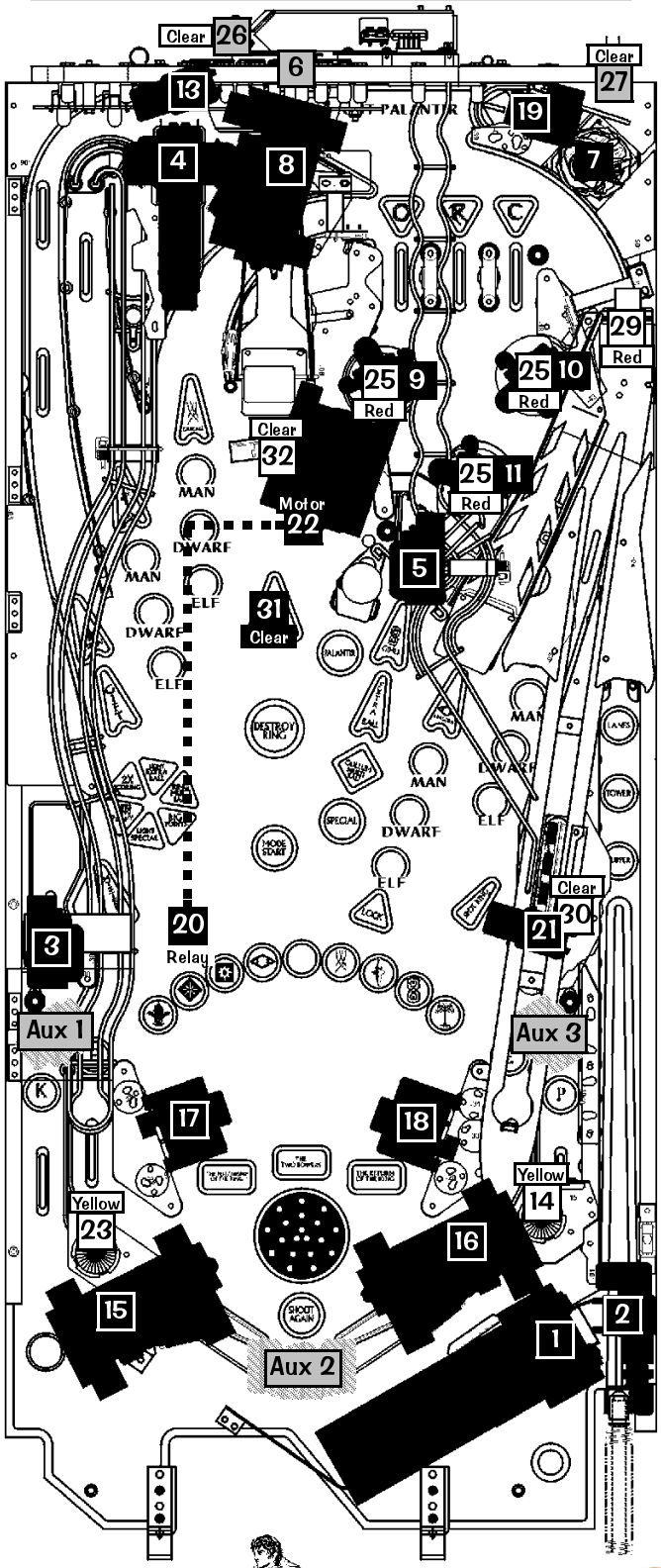

◀ Q32 (Flash Lamp) inside Balrog.

See Page 87 for better views.

◀ Playfield

Typical Coil Wiring

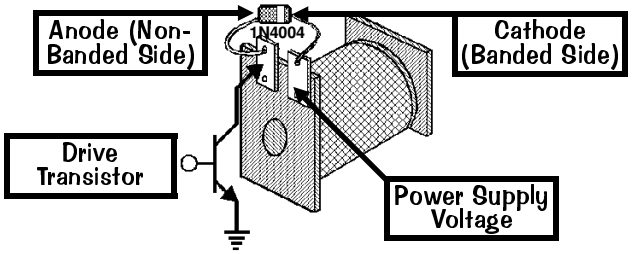

Bulb Types used for Flash Lamps

#89 Bulb
(Bayonet)
165-5000-89

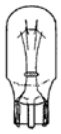

#906 Bulb
(Wedge Base)
165-5004-00

= Coils / Flash Lamps above Playfield.
= Coils / Flash Lamps below Playfield.
= Coils / Flash Lamps not on Playfield.
Color = Color of Mini-Mars of Flash Lamp Bulb.

Some Coil or Flash Lamp Diodes may be located under the playfield, in the Cabinet or Backbox *on Terminal Strips* ***or*** *Diode Boards and not on the assemblies.*
DOTS: Diode On Terminal Strip *See Section **5**, Chapter **2**, **Playfield Wiring**.*

Coil Q24 is Optional. *If either a Coin Meter, Token Dispenser or Knocker (all optional equipment) is required, call Technical Support for more information, 1-800-542-5377 or 1-708-345-7700.*

In COIL MENU also select:

CYCLING COIL TEST

COILS DETAILED CHART TABLE

	High Current Coils Group 1	Drive Transistor	Driver Ouput Board	Power Line Color	Power Line Connection	Power Voltage	Drive Transistor Control Line Color	D.T. Control Line Connect	Coil GA-Turn or Bulb Type
#1	TROUGH UP-KICKER	Q1	▲ I/O Power Driver ▼	YEL-VIO	J10-P4/5	50v DC	BRN-BLK	J8-P1	26-1200 ↻ 090-5044-00T
#2	AUTO LAUNCH	Q2		YEL-VIO	J10-P4/5	50v DC	BRN-RED	J8-P3	24-940 ↻ 090-5036-00T
#3	LEFT VUK	Q3		YEL-VIO	J10-P4/5	50v DC	BRN-ORG	J8-P4	26-1200 ↻ 090-5044-00B
#4	TOP VUK	Q4		YEL-VIO	J10-P4/5	50v DC	BRN-YEL	J8-P5	26-1200 ↻ 090-5044-00B
#5	RIGHT VUK	Q5		YEL-VIO	J10-P4/5	50v DC	BRN-GRN	J8-P6	26-1200 ↻ 090-5044-00B
#6	RING MAGNET	Q6		VIO-YEL	J10-P3	50v DC	BRN-BLU	J8-P7	20½-480 ↻ 090-5064-02
#7	RIGHT TOWER (DOTS)	Q7		YEL-VIO	J10-P4/5	50v DC	BRN-VIO	J8-P8	23-800 090-5001-NL
#8	LOOP DIVERTER	Q8		GRY-YEL~3A Fuse~YEL-VIO	J10-P1/2	50v DC	BRN-GRY	J8-P9	22-1080 ↻ 090-5032-00T

Diode On Terminal Strip (if noted)

	High Current Coils Group 2	Drive Transistor	Driver Ouput Board	Power Line Color	Power Line Connection	Power Voltage	Drive Transistor Control Line Color	D.T. Control Line Connect	Coil GA-Turn or Bulb Type
#9	LEFT BUMPER	Q9	▲ I/O Power Driver ▼	YEL-VIO	J10-P4/5	50v DC	BLU-BRN	J9-P1	26-1200 ↻ 090-5044-00T
#10	RIGHT BUMPER	Q10		YEL-VIO	J10-P4/5	50v DC	BLU-RED	J9-P2	26-1200 ↻ 090-5044-00T
#11	BOTTOM BUMPER	Q11		YEL-VIO	J10-P4/5	50v DC	BLU-ORG	J9-P4	26-1200 ↻ 090-5044-00T
#12	NOT USED	Q12					BLU-YEL	J9-P5	
#13	ORBIT PIN	Q13		BRN	J7-P1	20v DC	BLU-GRN	J9-P6	26-1200 ↻ 090-5044-00B
#14	FLASH: HELMS DEEP RT	Q14		ORG	J6-P10	50v DC	BLU-BLK	J9-P7	#906 Bulb 165-5004-00
#15	LEFT FLIPPER (50v RED/YEL)	Q15		GRY-YEL~3A Fuse~RED-YEL	J10-P1/2	50v DC	ORG-GRY	J9-P8	22-900 ↻ 090-5020-20T
#16	RIGHT FLIPPER (50v RED/YEL)	Q16		BLU-YEL~3A Fuse~RED-YEL	J10-P1/2	50v DC	ORG-VIO	J9-P9	22-900 ↻ 090-5020-20T

	Low Current Coils Group 1	Drive Transistor	Driver Ouput Board	Power Line Color	Power Line Connection	Power Voltage	Drive Transistor Control Line Color	D.T. Control Line Connect	Coil GA-Turn or Bulb Type
#17	LEFT SLINGSHOT	Q17	▲ I/O Power Driver ▼	BRN	J7-P1	20v DC	VIO-BRN	J7-P2	23-800 ↻ 090-5001-00T
#18	RIGHT SLINGSHOT	Q18		BRN	J7-P1	20v DC	VIO-RED	J7-P3	23-800 ↻ 090-5001-00T
#19	TOP SAUCER	Q19		BRN	J7-P1	20v DC	VIO-ORG	J7-P4	26-1200 ↻ 090-5044-00B
#20	BALROG MOTOR RELAY	Q20		BRN	J7-P1	20v DC	VIO-YEL	J7-P6	DC Relay 520-5066-00
#21	SWORD LOCK RELEASE	Q21		BRN	J7-P1	20v DC	VIO-GRN	J7-P7	27-1500 ↻ 090-5004-00T
#22	BALROG MOTOR	Q22		BRN	J7-P1	20v DC	VIO-BLU	J7-P8	Motor 041-5088-01
#23	FLASH: HELMS DEEP LT	Q23		ORG	J6-P10	20v DC	VIO-BLK	J7-P9	#906 Bulb 165-5004-00
#24	OPTIONAL COIL	Q24		RED	J16-P7	5v DC	VIO-GRY	J7-P10	Opt. 5v

	Low Current Coils Group 2	Drive Transistor	Driver Ouput Board	Power Line Color	Power Line Connection	Power Voltage	Drive Transistor Control Line Color	D.T. Control Line Connect	Coil GA-Turn or Bulb Type
#25	FLASH: POPS X3	Q25	▲ I/O Power Driver ▼	ORG	J6-P10	20v DC	BLK-BRN	J6-P1	#906 Bulb 165-5004-00
#26	FLASH: RING	Q26		ORG	J6-P10	20v DC	BLK-RED	J6-P2	#906 Bulb 165-5004-00
#27	FLASH: BACK PANEL	Q27		ORG	J6-P10	20v DC	BLK-ORG	J6-P3	#906 Bulb 165-5004-00
#28	NOT USED	Q28					BLK-YEL	J6-P4	
#29	FLASH: RINGWRAITH	Q29		ORG	J6-P10	20v DC	BLK-GRN	J6-P5	#906 *Red* 165-5004-02
#30	FLASH: SWORD	Q30		ORG	J6-P10	20v DC	BLK-BLU	J6-P6	#906 Bulb 165-5004-00
#31	FLASH: DESTROY THE RING	Q31		ORG	J6-P10	20v DC	BLK-VIO	J6-P7	#89 Bulb 165-5000-89
#32	FLASH: BALROG	Q32		ORG	J6-P10	20v DC	BLK-GRY	J6-P8	#89 Bulb 165-5000-89

Note: In Test Flash Lamps Menu ("Flash" Icon), Flashers tested are all Flash Lamps located between Q1-Q32 (This Game: Q14, Q23 & Q25-Q27, Q29-Q32)

	Auxiliary (UK ONLY)	Drive Transistor	Driver Ouput Board	Power Line Color	Power Line Connection	Power Voltage	Drive Transistor Control Line Color	D.T. Control Line Connect	Coil GA-Turn
	AUX 1: LEFT UP/DOWN POST	Q1	UK 3X Trans. Driver Board	BRN	J7-P1	20v DC	WHT	J2-P3	26-1200 ↻ 090-5044-00T
	AUX 2: CENTER UP/DOWN POST	Q2		BRN	J7-P1	20v DC	RED	J2-P4	23-1100 ↻ 090-5030-00T
	AUX 3: RIGHT UP/DOWN POST	Q3		BRN	J7-P1	20v DC	ORG	J2-P7	26-1200 ↻ 090-5044-00T

↻ **Coil Note:** ↻ Either -00**B** *or* -00**T** can be used for coil replacements. *B/T listed is preferable for easier diode access & may differ on game.*

Go To Diagnostics Menu

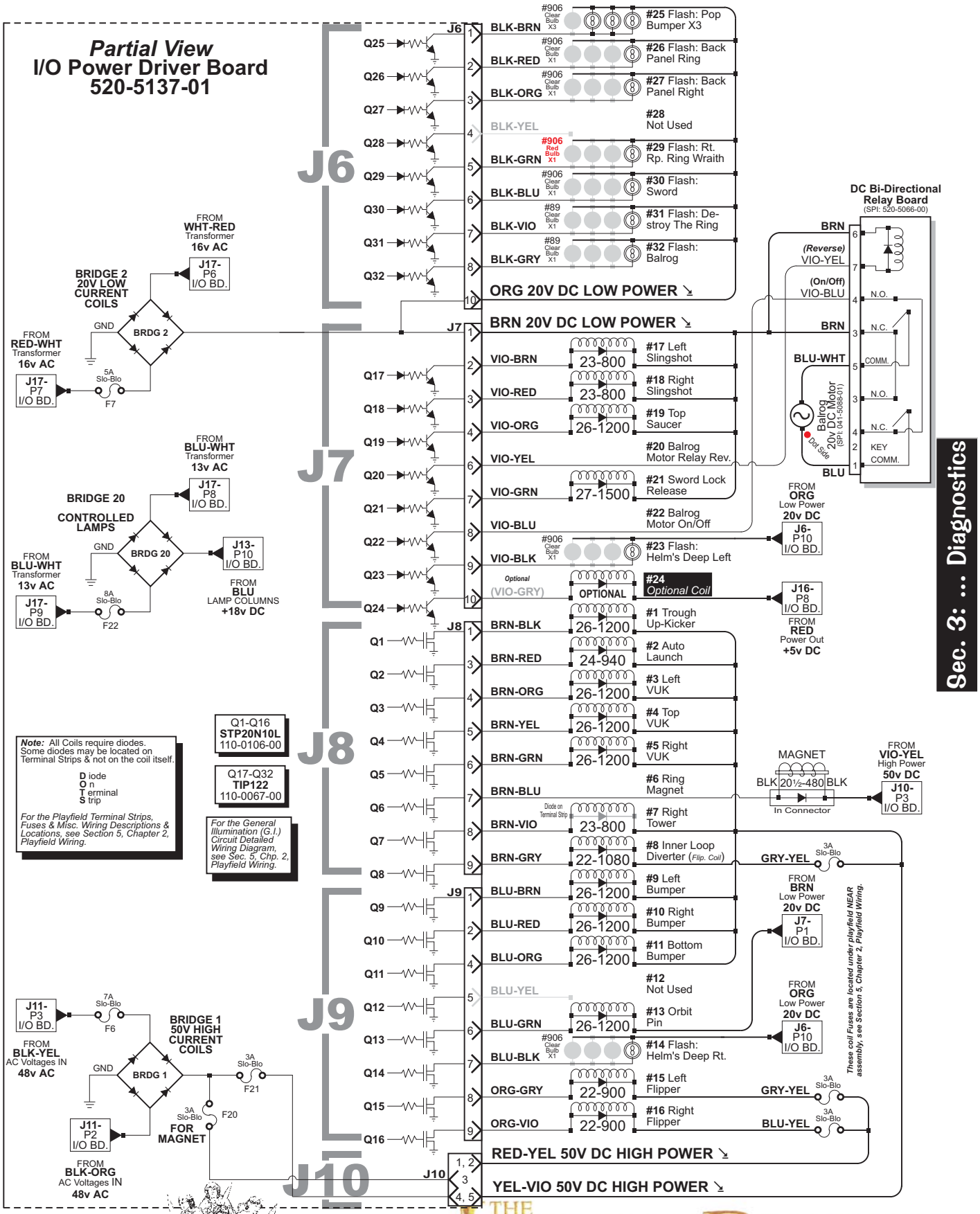
Partial View
I/O Power Driver Board
520-5137-01
J6
J7
J8
J9
J10
Q25
Q26
Q27
Q28
Q29
Q30
Q31
Q32
BLK-BRN
#25 Flash: Pop Bumper X3
BLK-RED
#26 Flash: Back Panel Ring
BLK-ORG
#27 Flash: Back Panel Right
BLK-YEL
#28 Not Used
BLK-GRN
#29 Flash: Rt. Rp. Ring Wraith
BLK-BLU
#30 Flash: Sword
BLK-VIO
#31 Flash: Destroy The Ring
BLK-GRY
#32 Flash: Balrog
ORG 20V DC LOW POWER
BRN 20V DC LOW POWER
Q17
Q18
Q19
Q20
Q21
Q22
Q23
Q24
VIO-BRN
#17 Left Slingshot
VIO-RED
#18 Right Slingshot
VIO-ORG
#19 Top Saucer
VIO-YEL
#20 Balrog Motor Relay Rev.
VIO-GRN
#21 Sword Lock Release
VIO-BLU
#22 Balrog Motor On/Off
VIO-BLK
#23 Flash: Helm's Deep Left
(VIO-GRY)
#24 Optional Coil
Q1
Q2
Q3
Q4
Q5
Q6
Q7
Q8
BRN-BLK
#1 Trough Up-Kicker
BRN-RED
#2 Auto Launch
BRN-ORG
#3 Left VUK
BRN-YEL
#4 Top VUK
BRN-GRN
#5 Right VUK
BRN-BLU
#6 Ring Magnet
BRN-VIO
#7 Right Tower
BRN-GRY
#8 Inner Loop Diverter (Flip. Coil)
Q9
Q10
Q11
Q12
Q13
Q14
Q15
Q16
BLU-BRN
#9 Left Bumper
BLU-RED
#10 Right Bumper
BLU-ORG
#11 Bottom Bumper
BLU-YEL
#12 Not Used
BLU-GRN
#13 Orbit Pin
BLU-BLK
#14 Flash: Helm's Deep Rt.
ORG-GRY
#15 Left Flipper
ORG-VIO
#16 Right Flipper
RED-YEL 50V DC HIGH POWER
YEL-VIO 50V DC HIGH POWER
DC Bi-Directional Relay Board
(SPI: 520-5066-00)
BRN
(Reverse) VIO-YEL
(On/Off) VIO-BLU
N.O.
N.C.
COMM.
BLU-WHT
Balrog 20v DC Motor
(SPI: 04-15086-01)
Dot Side
KEY COMM.
BLU
FROM ORG Low Power 20v DC
J6-P10 I/O BD.
FROM RED Power Out +5v DC
J16-P8 I/O BD.
MAGNET
BLK 20½-480 BLK
In Connector
FROM VIO-YEL High Power 50v DC
J10-P3 I/O BD.
GRY-YEL
3A Slo-Blo
FROM BRN Low Power 20v DC
J7-P1 I/O BD.
FROM ORG Low Power 20v DC
J6-P10 I/O BD.
These coil Fuses are located under playfield NEAR assembly, see Section 5, Chapter 2, Playfield Wiring.
BLU-YEL
FROM WHT-RED Transformer 16v AC
J17-P6 I/O BD.
BRIDGE 2 20V LOW CURRENT COILS
BRDG 2
GND
FROM RED-WHT Transformer 16v AC
J17-P7 I/O BD.
5A Slo-Blo
F7
FROM BLU-WHT Transformer 13v AC
J17-P8 I/O BD.
BRIDGE 20 CONTROLLED LAMPS
BRDG 20
J13-P10 I/O BD.
FROM BLU-WHT Transformer 13v AC
J17-P9 I/O BD.
8A Slo-Blo
F22
FROM BLU LAMP COLUMNS +18v DC
Note: All Coils require diodes. Some diodes may be located on Terminal Strips & not on the coil itself.
Diode On Terminal Strip
For the Playfield Terminal Strips, Fuses & Misc. Wiring Descriptions & Locations, see Section 5, Chapter 2, Playfield Wiring.
Q1-Q16 STP20N10L 110-0106-00
Q17-Q32 TIP122 110-0067-00
For the General Illumination (G.I.) Circuit Detailed Wiring Diagram, see Sec. 5, Chp. 2, Playfield Wiring.
J11-P3 I/O BD.
7A Slo-Blo
F6
FROM BLK-YEL AC Voltages IN 48v AC
BRIDGE 1 50V HIGH CURRENT COILS
BRDG 1
3A Slo-Blo
F21
3A Slo-Blo
F20
FOR MAGNET
J11-P2 I/O BD.
FROM BLK-ORG AC Voltages IN 48v AC

Go To Lamp Menu

To initiate, from the **DIAGNOSTICS MENU**, select the "LAMP" *Icon* with either the **Red "LEFT"** or **Green "RIGHT" Buttons** and press the **Black "ENTER" Button**. Controlled lamps are configured in and 8 x 10 Matrix of Columns (Lamp Drives) and Rows (Lamp Returns) with up to **80** lamps possible. The Lamp Test Menu consists of four (4) parts: **Single Lamp Test**, **Test All Lamps**, **Row Lamp Test** & **Column Lamp Test**.

Single Lamp Test

To initiate, from the **LAMP MENU**, select the "ONE" *Icon* with either the **Red** or **Green Buttons** and press the **Black Button**. Select either the "-" or "+" *Mini-Icons*. Start with the "+" *Mini-Icon* to start the manual **Single Lamp Test** from Column 1, Row 1, Switch 1. Press the **Black Button** on the "+" *Mini-Icon*, as each lamp is selected, the lamp will light at it's location on the playfield as well as the display, indicating the Lamp Matrix Grid Position *(below)*, lamp name with the corresponding number, Return (Row) Wire & Color, Drive (Column) Wire & Color, and associated drive transistors. Press the **Black Button** again to move forward in the test. To test and view a particular lamp, select the "RUN" *Mini-Icon* and press the **Black Button**. Each time the **Black Button** is pushed, the lamp will light-up on the playfield, with the display indicating the lamp information. *Continue with the same procedure to run through the entire test.*

Test All Lamps

To initiate, from the **LAMP MENU**, select the "ALL" *Icon* with either the **Red** or **Green Buttons** and press the **Black Button**. If still in **Single Lamp Test** (or any 1 of the 4 tests), select the "PREV" *Mini-Icon* to return to **LAMP MENU** or select either of the "<<" or ">>" *Mini-Icons* to move through the tests, keep activating until **Test All Lamps** is displayed. The display will indicate **ALL LAMPS ON** and the lamps on the playfield will be lit, alternating between the rows in the Lamp Matrix Grid.

Row & Column Lamp Tests

To initiate, from the **LAMP MENU**, select the "ROW" or "COL" *Icon* with either the **Red** or **Green Buttons** and press the **Black Button**. If still in a previous test, select the "PREV" *Mini-Icon* to return to **LAMP MENU** or select either of the "<<" or ">>" *Mini-Icons* to move through the tests, keep activating until **Row** or **Column Lamp Test** *(whichever desired)* is displayed. In this test, each set of lamps in each Row or Column of the Lamp Matrix Grid *(respective to each test)* will light-up on the playfield and is indicated in the display.

LAMP MATRIX GRID

Column (18v) / Row (Ground)	1: U17 YEL-BRN J13-P9	2: U16 YEL-RED J13-P8	3: U15 YEL-ORG J13-P7	4: U14 YEL-BLK J13-P6	5: U13 YEL-GRN J13-P5	6: U12 YEL-BLU J13-P4	7: U11 YEL-VIO J13-P3	8: U10 YEL-GRY J13-P1
1: Q33 RED-BRN J12-P1	1 #555 Bulb (K) EEP	2 #555 Bulb K (E) EP	3 #555 Bulb KE (E) P	4 #555 Bulb KEE (P)	5 #555 Bulb THE FELLOWSHIP OF THE RING	6 #555 Bulb THE TWO TOWERS	7 #555 Bulb THE RETURN OF THE KING	8 #555 Bulb SHOOT AGAIN
2: Q34 RED-BLK J12-P2	9 #555 Bulb PIPPIN	10 #555 Bulb MERRY	11 #555 Bulb SAM	12 #555 Bulb ARAGORN	13 #555 Bulb FRODO	14 #555 Bulb GANDALF	15 #555 Bulb LEGOLES	16 #555 Bulb GIMLI
3: Q35 RED-ORG J12-P3	17 #555 Bulb BOROMIR	18 #555 Bulb MYSTERY	19 #555 Bulb FRODO ARROW	20 #44 Bulb DESTROY RING	21 #555 Bulb MODE START	22 #555 Bulb PALANTIR	23 #44 Bulb PALANTIR GLOBE	24 #555 Bulb SPOT RING
4: Q36 RED-YEL J12-P4	25 #555 Bulb PIPPIN ARROW	26 #555 Bulb GIFT OF THE ELVES	27 #555 Bulb LIGHT EXTRA BALL	28 #555 Bulb RING MULTIBALL	29 #555 Bulb BIG POINTS	30 #555 Bulb LIGHT SPECIAL	31 #555 Bulb SUPER RING FRENZY	32 #555 Bulb 2X SCORING
5: Q37 RED-GRN J12-P5	33 #555 Bulb LEGOLES ARROW	34 #555 Bulb L RAMP MAN RING	35 #555 Bulb L RAMP DWARF RING	36 #555 Bulb L RAMP ELF RING	37 #555 Bulb GANDALF ARROW	38 #555 Bulb C LOOP MAN RING	39 #555 Bulb C LOOP DWARF RING	40 #555 Bulb C LOOP ELF RING
6: Q38 RED-BLU J12-P6	41 #555 Bulb GIMLI ARROW	42 #555 Bulb EXTRA BALL	43 #555 Bulb GOLLUM MULTIBALL	44 #555 Bulb SPECIAL	45 #555 Bulb MERRY ARROW	46 #555 Bulb R ORBIT MAN RING	47 #555 Bulb R ORBIT DWARF RING	48 #555 Bulb R ORBIT ELF RING
7: Q39 RED-VIO J12-P8	49 #555 Bulb ARAGORN ARROW	50 #555 Bulb R RAMP MAN RING	51 #555 Bulb R RAMP DWARF RING	52 #555 Bulb R RAMP ELF RING	53 #555 Bulb LOCK	54 #555 Bulb LANES	55 #555 Bulb TOWER	56 #555 Bulb FLIPPER
8: Q40 RED-GRY J12-P9	57 #555 Bulb (O) RC	58 #555 Bulb O (R) C	59 #555 Bulb OR (C)	60 #555 Grn. Bulb POTD U.L.	61 #555 Grn. Bulb POTD U.R.	62 #555 Grn. Bulb POTD L.L.	63 #555 Grn. Bulb POTD L.R.	64 #44 Bulb SHOOTER LANE #1 BOT
9: Q41 RED-WHT J12-P10	65 #44 Bulb SHOOTER LANE #2	66 #44 Bulb SHOOTER LANE #3	67 #44 Bulb SHOOTER LANE #4	68 #44 Bulb SHOOTER LANE #5	69 #44 Bulb SHOOTER LANE #6	70 #44 Bulb SHOOTER LANE #7	71 #44 Bulb SHOOTER LANE #8	72 #44 Bulb SHOOTER LANE #9 TOP
10: Q42 RED J12-P11	73 #44 Bulb ESCAPE THE RINGWRAITHS	74 #44 Bulb GANDALF VS SARUMAN	75 #44 Bulb WARG ATTACK	76 #44 Bulb WAR OF THE ENTS	77 #44 Bulb BATTLE WITH SHELOB	78 #44 Bulb DESTROY THE WITCH-KING	79 #555 Bulb TOURNAMENT BUTTON	80 #555 Bulb START BUTTON

Go To Diagnostics Menu

LAMP MATRIX GRID LOCATIONS

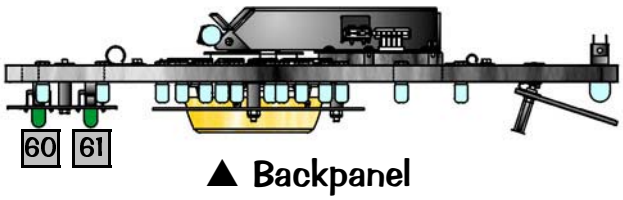

▲ Backpanel

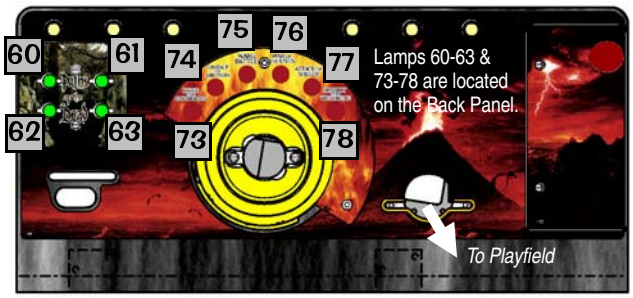

▲ Backpanel

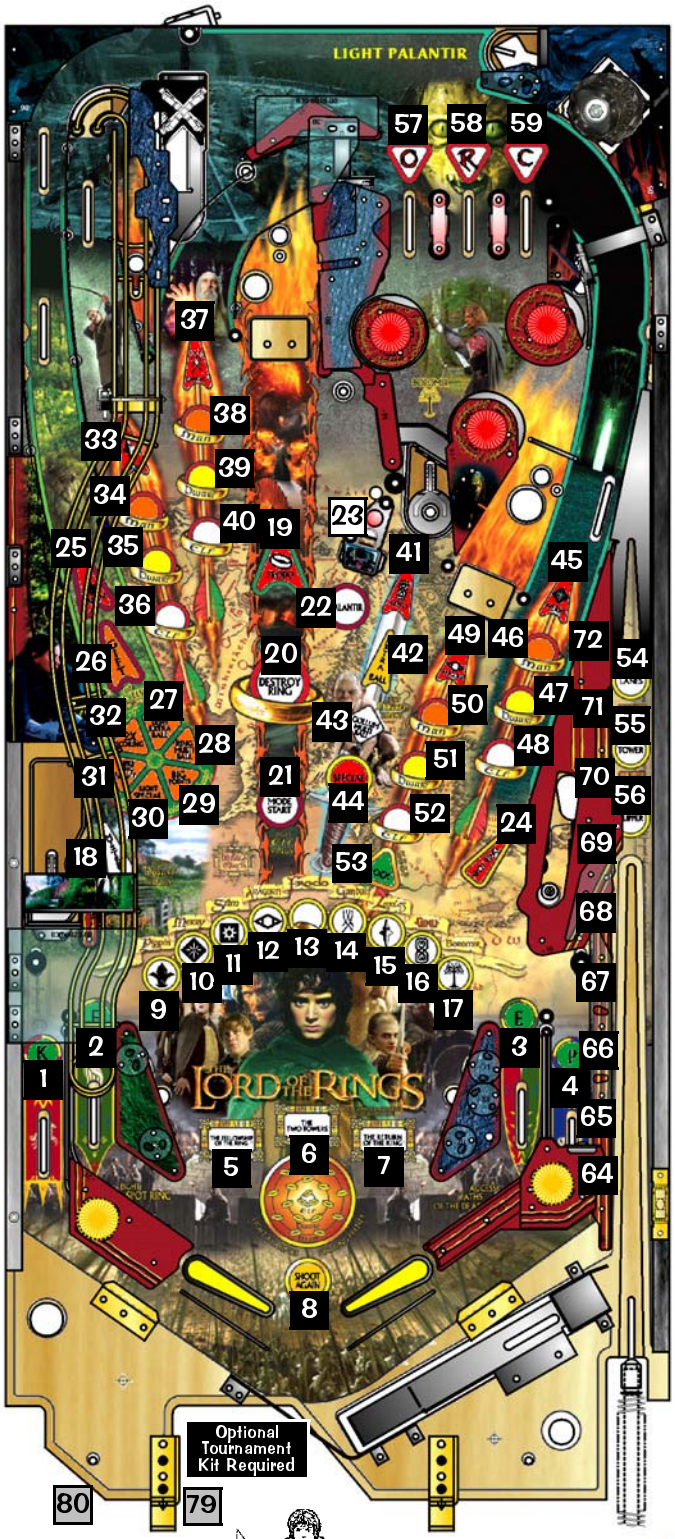

◀ Playfield

Typical Lamp Wiring & Schematic

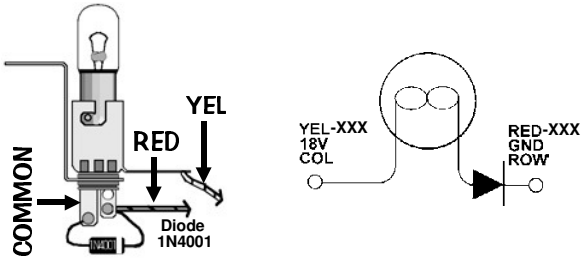

Bulb Types used for Lamps

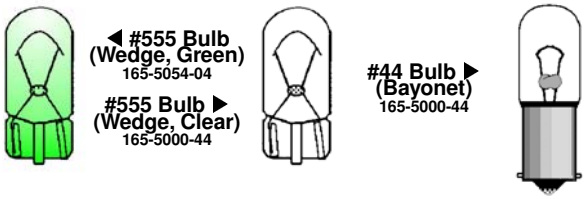

= Lamps above Playfield.
= Lamps below Playfield.
= Lamps not on Playfield.

Lamp Part Notes: *#555 Bulb Clear = 165-5002-00. #555 Bulb Green = 165-5054-04 . #44 Bulb Clear = 165-5000-44.*
*See Section **4**, Chapter **1**, **Parts Identification & Location**, Pages **72-74** for more details on bulbs and corresponding sockets.*
***Some Lamp Diodes may be located under the playfield, in the Cabinet or Backbox** on Terminal Strips* and not on or with the Lamp Socket.
DOTS: **D**iode **O**n **T**erminal **S**trip, *see Section **5**, Chapter **2**, **Playfield Wiring**.*

Test Flash Lamps

```
COIN DOOR IS OPEN
PLAYFIELD HIGH POWER
DISABLED BY
COIN DOOR INTERLOCK
```

PULL OUT the Power Interlock Switch for operation with the Coin Door open.

To initiate, from the **DIAGNOSTICS MENU**, select the "FLASH" *Icon* with either the **Red "LEFT"** or **Green "RIGHT" Buttons** and press the **Black "ENTER" Button**. After selecting this *Icon* the display will indicate **CYCLING FLASHERS**. The Flash Lamps will cycle continuously until the test is exited. This test allows the technician to easily spot any burned-out bulbs and replace them. Flashers tested are Flash Lamps in Positions: **Q1-Q32** and in this game Flash Lamp(s) are : **Q14, Q23, Q25-Q27 & Q29-Q32.**

Clear Ball Trough

```
COIN DOOR IS OPEN
PLAYFIELD HIGH POWER
DISABLED BY
COIN DOOR INTERLOCK
```

PULL OUT the Power Interlock Switch for operation with the Coin Door open.

To initiate, from the **DIAGNOSTICS MENU**, select the "CLR" *Icon* with either the **Red "LEFT"** or **Green "RIGHT" Buttons** and press the **Black "ENTER" Button**. This Menu is provided to allow the technician a simple method of removing the balls from the trough and also, to test functionality of the trough, ensuring proper trough operation. After selecting this *Icon* the display will show a graphic of the ball trough with balls in the trough with it's corresponding switch number. Select the "RUN" *Mini-Icon* to eject the ball in the first position. Simultaneously, the display and the playfield will eject the ball to the Trough Up-Kicker, eject from the Trough Up-Kicker into the Shooter Lane and will be ejected onto the playfield where the technician can easily retrieve the pinball or allow the ball(s) to re-enter the trough to continue **Clear Ball Trough Test**.

⚠ **CAUTION:** *Continuous use of above test may overheat the Trough Up-Kicker Coil.* ⚠

Technician Alerts

To initiate, from the **DIAGNOSTICS MENU**, select the "TECH" *Icon* with either the **Red "LEFT"** or **Green "RIGHT" Buttons** and press the **Black "ENTER" Button**. This Menu is provided to show any switch problems and/or missing pinballs.

After selecting this *Icon*, and if any of the below criteria is met, the display will indicate *any or all* of the following categories: **POSSIBLY BROKEN SWITCH**, **CHECK SWITCHES** and/or **HYPERSENSITIVE SWITCH** *(Sw. #16, Shooter Lane, is used as an example).* If more than one switch is reported, the Switch Number and Name will cycle within the category, and then will cycle the categories. To return to the **DIAGNOSTICS MENU**, select the "PREV" *Mini-Icon* and press the **Black "ENTER" Button**.

Switch Detection

During game play, activation of switches are monitored. In programming, every switch is given a minimum & maximum value based on the game. The switches are monitored every 5 minutes of game play with a "sliding window" of 15 minutes. If a switch is determined to be faulty, game play is compensated.

- Switches noted as **POSSIBLY BROKEN SWITCH** should be checked, then adjusted or replaced. ***Important:*** *A switch reported as "possibly broken" may actually be an unused switch due to* ***lack of usage*** *and* ***not because they're broken.*** *This can happen, if a switch is located in a "hard" shot position, and the players are not making the shot. Game programming will still compensate for this unplayed switch.*

```
PLAYFIED STATUS
POSSIBLY BROKEN SWITCH
#02 SHOOTER LANE
PREV QUIT
```

- Switches noted as **CHECK SWITCHES** are determined to be stuck closed or open depending on switch usage. Free up the switch actuator adjust or replace if necessary.

```
PLAYFIED STATUS
CHECK SWITCHES
#02 SHOOTER LANE
PREV QUIT
```

- Switches noted as **HYPERSENSTIVE SWITCH** means just that, the switch should be readjusted or replace if necessary.

```
PLAYFIED STATUS
HYPERSENSITIVE SWITCH
#02 SHOOTER LANE
PREV QUIT
```

Determination of switch usage can be checked in **Audits** *(review Section **3**, Chapter **3**, **GO TO AUDITS MENU**).* Find the associated Audit with the switch in question and check usage; compare it to commonly used switches for comparison. After any switch is checked and repaired or replaced, it's suggested to test the switch in the **PLAY TEST MENU** *(see the **next page**)* or **Single Coil Test** *(reviewed earlier in this chapter, **Page 18**)* where the associated coil to the switch can be tested as well. After correcting the problem, the switch will still be reported until the game is played and the switch is again monitored as specified above. *Only you can determine if a switch getting reported is bad or if the switch is currently not getting actuated during game play.*

Technicians Alerts continued on the next page.

Pinball Detection

```
PLAYFIED STATUS
PINBALL MISSING

PREV QUIT 3
```

While in **Technician Alerts** Menu, if the following is displayed, the game has detected one (1) or more pinball(s) missing and has compensated for the lost pinball(s) to provide normal game play.

Important: *Determine where the pinball is!* ***Do not add pinball(s)*** *until it is determined the pinball(s) are indeed missing & not just stuck. If pinball(s) are added, & if the original stuck pinball has freed itself, the pinball game will not operate properly with the extra pinball(s). When the pinball is recovered, the above display* ***will not*** *appear the next time* ***Technician Alerts*** *is visited (a game must be played for the pinball to be determined as found).*

During game play, a ball can get trapped or stuck. If after approximately 15 seconds of inactivity or "no scoring," **Ball Search** is started. ***Note:*** *If the pinball is in the Plunger Lane or "held" on the flipper, no* ***Ball Search*** *will be performed.* The game will perform one **Ball Search** in an attempt to "find" or free-up the pinball.

```
LOOKING FOR
PINBALLS      20
PLEASE WAIT
```

If the game does not see a switch closure *(indicating the pinball has not been found),* this display will appear with a count-down timer of 20 seconds, during which **Ball Search** will continue until the timer runs out *(this feature will not happen if the game is in Competition Mode; Ball Search will continue until the pinball is found, unstuck and/or replaced manually).* The display will momentarily acknowledge the missing pinball(s). The game will provide another pinball into play and will compensate for the lost pinball. Game play will appear normal.

Note: *This detection and compensation will happen with every pinball, if each suffers the same fate of a ball trap. If* ***all*** *balls get trapped, the game cannot be played or started until the situation is rectified.*

Tech Report Alert Option

This game has the capability of ***automatically alerting*** the operator upon **Power-Up** and/or opening the **Coin Door** if any switch problems and/or missing pinballs has occurred. *Review Section* ***3****, Chapter* ***4****,* ***GO TO ADJUSTMENTS MENU****, Standard Adjustments.* The Standard Adjustment to change is **49**. The default for this feature is **NEVER**. The options are: **POWERUP**, **COIN DOOR** or **POWERUP AND COIN DOOR**.

```
PLEASE CHECK
TECH REPORT
PORTALS->DIAG->TECH
```

Upon **Power-Up** *(Game Reset)* and/or opening the **Coin Door** *(depending on the option selected)*, this ***display*** will flash three (3) times along with an audible sound. To find out the problem, enter this **Technicians Alert Menu** and wait for the displays.

Note: Coils ***are not reported*** in **Technician Alerts**, ***h o w e v e r****, if a faulty switch is the culprit, the switch will then be reported.* The below ***display*** is shown momentarily during **Game Mode** or **Power-Up** to alert the operator of a coil malfunction *(coil doesn't energize or coil fires a multiple number of times).* **" OPERATOR ALERT! "** works by monitoring any *switch activated coil* that has the potential to trap a ball when disabled *(e.g. in the Auto Launch, Scoop, Eject, etc.).* This alert can also appear if a switch associated with a coil *(example shown is #2 Auto Launch)* is stuck closed *(caused by a switch jam or stuck ball)*; the **CPU/Sound Board** will *activate* the coil approximately ten times and if the switch remains closed, the game will report this switch in **Technician Alerts** as **CHECK SWITCHES**. *The display alert* ***" PLEASE CHECK TECH REPORT "*** *will be shown (****o n l y i f*** *POWERUP, COIN DOOR or POWERUP AND COIN DOOR is selected in Standard Adjustment* ***49****).*

```
OPERATOR ALERT!
#2 AUTO LAUNCH
COIL MALFUNCTION
```

Service Phone

To initiate, from the **DIAGNOSTICS MENU**, select the "SERV" *Icon* with either the **Red "LEFT"** or **Green "RIGHT" Buttons** and press the **Black "ENTER" Button**. After selecting this *Icon* the display will indicate a phone number to call if technical assistance is required *(In USA Code: 1-800-KICKERS).*

Begin Play Test

```
COIN DOOR IS OPEN
PLAYFIELD HIGH POWER
DISABLED BY
COIN DOOR INTERLOCK
```

PULL OUT the Power Interlock Switch for operation with the Coin Door open.

To initiate, from the **DIAGNOSTICS MENU**, select the "PLAY" *Icon* with either the **Red "LEFT"** or **Green "RIGHT" Buttons** and press the **Black "ENTER" Button**. After selecting this *Icon* the technician can test certain play functions to insure all switch activated coils function without entering game play. For example, by rolling the ball over the Shooter Lane switch, the Autoplunger should fire. If it kicks to early or too late, the switch actuator should be adjusted to compensate for this error. If it fails to fire, use the **Switch Test** or **Coil Test** to help determine the cause of the failure. *During this Play Test, check all coil assemblies with related switches in the game. For unique Game Test(s), select the* ***"Ring"*** *Icon in the* ***DIAGNOSTICS MENU****, reviewed on Pages* ***27-28****.*

Fire Knocker

To initiate, from the **DIAGNOSTICS MENU**, select the "KNOCKER" *Icon* with either the **Red "LEFT"** or **Green "RIGHT" Buttons** and press the **Black "ENTER" Button**. The digitally mastered "Knocker" is sounded.

Sound / Speaker Test

To initiate, from the **DIAGNOSTICS MENU**, select the "SPKR" *Icon* with either the **Red "LEFT"** or **Green "RIGHT" Buttons** and press the **Black "ENTER" Button**. The BSMT 2000 Sound System produces true digital stereo sound from Backbox & Cabinet Speakers or *"Mono"* on the Cabinet Speaker (when used by itself). After selecting this *Icon*, select the "-" or "+" *Mini-Icons* and press the **Black "ENTER" Button** to *activate* the first test. Repeat to visually see & hear all tests. Select the "RUN" *Mini-Icon* to *activate* the test chosen without moving to the next test.

Note: *During Sound Tests, the display shows the speaker identification and the corresponding sound(s). The sound functions allow verification that both channels are functioning properly & that the speaker connections are correct.*

Speaker Phase Testing

Connections to each of speakers are polarized and each must be connected appropriately for the best quality sound. If one speaker has the positive and negative connections reversed with respect to the other one, bass frequencies will not be produced properly and the overall sound quality will be poor. To test for proper speaker phasing, use the sound test to cycle through the Backbox & Cabinet, and Backbox Sine (repeated) functions. If the Cabinet Sine produces more volume and bass than the Left Sine, the speakers are connected properly. If it produces the same or less, one speaker is connected improperly. To isolate and correct reversed speaker connections, one of two methods may be used.

1. Check each speaker for polarity markings. If the speakers have polarity markings, verify that the Backbox Speaker **RED-WHT** Wire and the Cabinet Speaker **YEL-WHT** Wire is connected to the negative (-) terminal.

2. Disconnect the speaker output connector from the CPU / Sound Board and connect a 1.5-volt battery across each speaker pair one at a time while observing the speakers. Make sure the positive battery terminal is connected to the positive lead (CN4, Pin-3 (**RED-BLK**) or Pin-6 (**YEL-BLK**)) each time. As the connection is made, check speaker cone movement; proper connections are indicated by outward movement.

Note: *For ROM Usage (Summary Table) & Locations, see Page* **DR. ❶** *in the* ***"Find-It-In-Front: Dr. Pinball Section"****. Voice ROMs (****U17****,* ***U21****,* ***U36*** *and/or* ***U37****) which are* ***8MB must have a Jumper at W6*** *on the* ***CPU/Sound Board*** *to function properly.*

Auto / Manual Tests	Sounds Produced
Speaker Test	**Tone**
Sound/OPSYS EPROM (Loc. U7)	**Level 1-3+ (Music Test)**
Voice ROMs: 1 (U17) 2 (U21) 3 (U36) 4 (U37)	**Speech Pattern 1-3+**

Begin Burn In

To initiate, from the **DIAGNOSTICS MENU**, select the "BURN" *Icon* with either the **Red "LEFT"** or **Green "RIGHT" Buttons** and press the **Black "ENTER" Button**. After selecting this *Icon* the ***Begin Burn-In Test*** will start. At this stage the game will exercise all CPU I/O Functions (**Dot Matrix Display Test**, **Coil Testing**, **Lamp Testing**, **Sound...**, etc.). This is provided to constantly exercise sounds, coils, etc... Cumulative Burn-In minutes will be displayed. ***Note:*** *To reset Burn-In minutes to* ***00*** *see Section* ***3****, Chapter* ***6****,* ***GO TO RESET MENU****,* ***Factory Reset****.* ***Caution:*** *Performing a Factory Reset will reset all other information as well.*

Dot Matrix Test

To initiate, from the **DIAGNOSTICS MENU**, select the "DOT TEST" *Icon* with either the **Red "LEFT"** or **Green "RIGHT" Buttons** and press the **Black "ENTER" Button**. After selecting this *Icon* the **Dot Matrix Test** immediately begins. ***Note:*** Pressing any button will exit the test & return to **DIAGNOSTICS MENU**. The display will immediately illuminate & cycle for 1 pass of each test continuously for each of the following:

Test 1

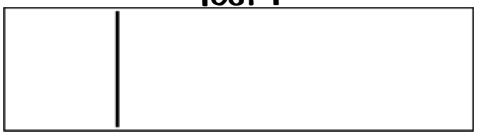

Illuminates **1 vertical column of dots**, turning it off & illuminating the *next column*, until each *column* has been individually lit, while the other *columns* are off.

Test 2

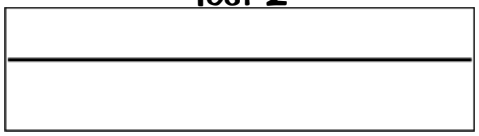

Illuminates **1 horizontal row of dots**, turning it off & illuminating the *next row*, until each *row* has been individually lit, while the other *rows* are off.

Go To Diagnostics Menu

Test 3

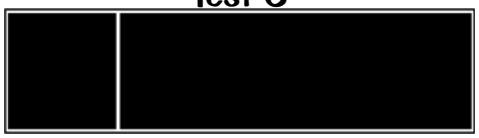

Illuminates **all the dots, except for one column** from left to right.

Test 4

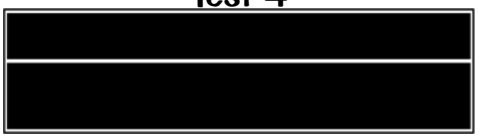

Illuminates **all the dots, except for one row** from top to bottom.

Test 5

Illuminates **every other dot lit**, in both the *rows and columns*.

Note: Pressing the **Red**, **Green**, **Black** or **Flipper Buttons** will exit the test & return to **DIAGNOSTICS MENU**.

Dot Matrix Display Explained

The display utilizes a **Micro-Processor Control Board** mounted in piggyback fashion to the **Dot Matrix Display (128 X 32) Driver Board**. The purpose behind this board is to provide more information to the operator as well as displaying graphics to the player.

The board is controlled by a **6809E Microprocessor** and its personality ROM (Unique to the Game). It receives Data, Reset & Clock Information from the **CPU/Sound Board** via the ribbon cable and sends back multiple Status and Busy Signals to the **CPU**. This is to insure synchronized communication between the **CPU** and the **Display Controller Board**. The Drivers for the rows and columns are provided on 5 surface mounted integrated circuits on the **Dot Matrix Display Driver Board**.

LOTR Tests

To initiate, from the **DIAGNOSTICS MENU**, select the "LOTR" *Icon* with either the **Red "LEFT"** or **Green "RIGHT" Button** and press the **Black "ENTER" Button**.

PULL OUT the Power Interlock Switch for operation with the Coin Door open.

This will bring up the **LOTR TESTS MENU**, with the "RING" *Icon (RING MAGNET TEST)* flashing. This Sub-Menu is used to test the operation of the **Ring OPTO Switches, Back Panel Trough Switch & Spinner (Center Ramp) Switch and the Magnet Coil Operation** ("RING" *Icon*); **19-LEDs (these are not Controlled Lamps)** ("LED" *Icon*); **Balrog Open, Close & Bash Switches and the Balrog Motor Operation** ("BROG" *Icon*). To initiate, from the **LOTR TESTS MENU**, select one of the 3 *Icons* with either the **Red** or **Green Buttons** and press the **Black Button**. After finishing the Test, select the "PREV" *Icon* to return to the Sub-Menu or select either of the ">>" *Icon* to slip between the 3 Testing Menus.

Ring Magnet Test

Selecting the "RING" *Icon* will bring up the **RING MAGNET TEST MENU** with the "+" *Mini-Icon* flashing and the ***Magnet Test*** set to **OFF**. These tests are provided to allow a method of testing the **Ring Made (OPTOs) (Sw. 47)**, **Back Trough (Sw. 48)**, **Spinner (Sw. 52)**, and **Ring Magnet (Q6)** operation. *Switches 47, 48 & 52 are in a Normally Open state.*

Select and *activate* the "+" *Mini-Icon* to cycle between the two (2) Magnet Tests: **GRAB AND DROP** *(ball will release forward) or* **GRAB AND THROW** *(ball will enter the Back Panel to test the Back Trough Switch). With ball-in-hand*, roll onto the Center Ramp. As the **Spinner (Sw. 52)** is closed, the □ box will turn solid ■; the ball should launch into the Magnet Ring. The **Magnet (Q6)** is then pulsed, grabbing the ball and either will drop it forwards or throw it backwards *(depends chosen test).* As the **Ring Made (Sw. 47)** is momentarily closed, the □ box will turn solid ■ then □ again. If test is "Grab & Throw", the ball will enter the Back Panel Trough and the **Back Trough (Sw. 48)** will momentarily close, the □ box will turn solid ■ then □ again *(with the ball returning on the Center Wire Ramp). You can also hand check the 3 switches as well.* The OPTOs are in the ring *(break the light path by placing finger into the hole).* The trough switch can be accessed through the other hole above the Wire Ramp. *See Sec.* ***4****, Chp.* ***2****, Drawings..., Pgs.* ***94-96*** *and Sec.* ***5****, Chp.* ***4****, PCBs, Page* ***143*** *for a close up view on the OPTO Switches and the OPTO Transmitter / Receiver Amplifier Board.*

LOTR Tests continued on the next page.

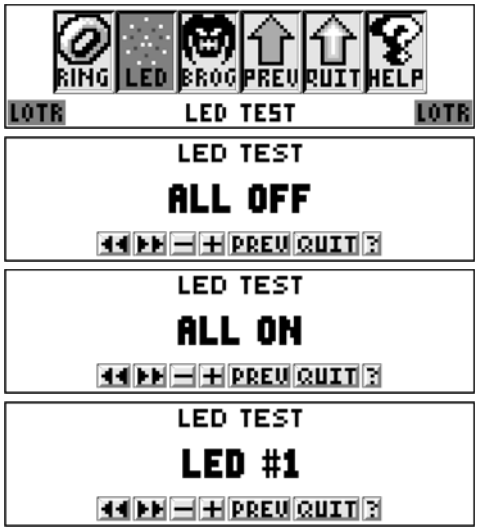

LED Test

Selecting the"LED" *Icon* will bring up the **LED TEST MENU** with the "+" *Mini-Icon* flashing and the ***LED Test*** set to **ALL OFF**. This test is provided to allow a method of testing the **19-LED PCB** located between the flippers. ***Note:*** *These LEDs are not Controlled Lamps (i.e. not part of the Lamp Matrix.)*

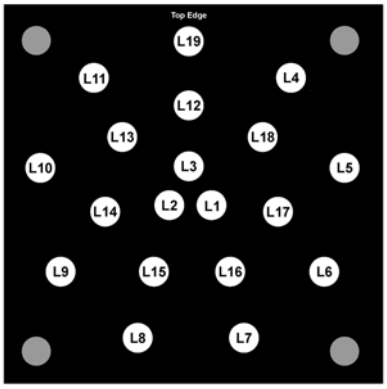

Select and *activate* the "+" *Mini-Icon* to cycle between the twenty (20) LED Tests (**ALL ON**, **LED #1** through **LED #19**). **ALL ON** = All 19 LEDs will blink **ON** and **OFF** until the test is exited. **LED #1** = L1 will blink **ON** and **OFF**. **LED #2** through **LED #19** will follow suit.

*See Section **5**, Chapter **4**, PCBs, Page **144** for a close up view of the 19-LED PCB.*

CAUTION: Be careful of moving parts!
The following test has a moving part and will activate upon selection of this test. Keep fingers clear.

Balrog Test

PULL OUT the Power Interlock Switch for operation with the Coin Door open.

Selecting the"BROG" *Icon* will bring up the **BALROG TEST MENU** with the "RUN" *Mini-Icon* flashing. ***Note:*** *Upon selection of the "BROG" Icon, (and with the Power Interlock Switched pulled out), the motor will cycle, moving the Balrog, blocking the entrance of the Center Ramp (**Fig. 1**).* This test is provided to allow a method of testing the **Balrog Open (Sw. 31)**, **Balrog Closed (Sw. 32)** and **Balrog (Bash) Hit (Sw. 28)** and **Balrog Motor (Q32)** operation *in conjunction with the* **Motor Relay Board (Q20).** *Switches 31, 32 & 28 are in a Normally Closed state (Switches 31 & 32 are under the playfield on the Motor Assembly; Switch 28 is located inside the Balrog Assembly). With the Balrog now blocking the Center Ramp (**Fig. 1**), with ball-in-hand*, roll the ball at the front hit plate *(knocking the Balrog Over)*, and note the **Bash (Sw. 28, Balrog Hit)** ■ box will turn □, thus indicating proper operation.

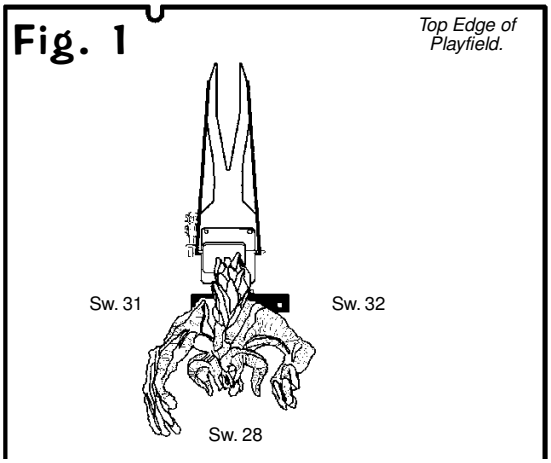

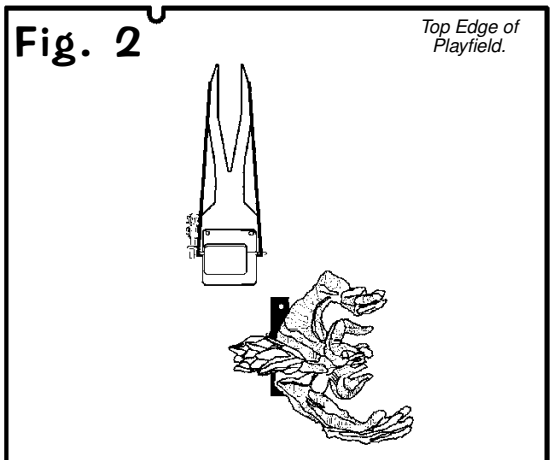

Select and *activate* the "RUN" *Mini-Icon* to cycle the Motor. As the Balrog opens the Center Ramp (**Fig. 2**) and comes to a rest, the **Balrog Closed (Sw. 32)** will open, the solid ■ box will turn □ and **Balrog Open (Sw. 31)** will close, the □ box will turn solid ■.

*For more details of the Switches & Coils (Part Numbers & views) tested on this and the previous page, review Section **4**, Chapter **2**, Drawings for Major Assemblies & Ramps, Pages **93-97**.*

Go To Fuse Table

To initiate, from the **DIAGNOSTICS MENU**, select the "FUSES" *Icon* with either the **Red "LEFT"** or **Green "RIGHT" Buttons** and press the **Black "ENTER" Button**. The **FUSE TABLE MENU** now appears. This provides the technician with the current **Fuse Table** for this game *(also noted on a decal in the Backbox).*The fuses are located in the Backbox *(on the **Display Power Supply Board** and the **I/O Power Driver Board**)*, and also in the Cabinet *(under the playfield by the Flippers and/or by any unique assembly requiring an additional fuse, such as magnets)*. For the complete **Fuse List** in the *Quick Reference Fuse Chart & Pictorials*, *see the next page or Page* DR. ❶ *(front of this manual).*

Example:

After entering **Portals™**, the **MAIN MENU** now appears with the "DIAG" *Icon* (**GO TO DIAGNOSTICS MENU**) flashing:

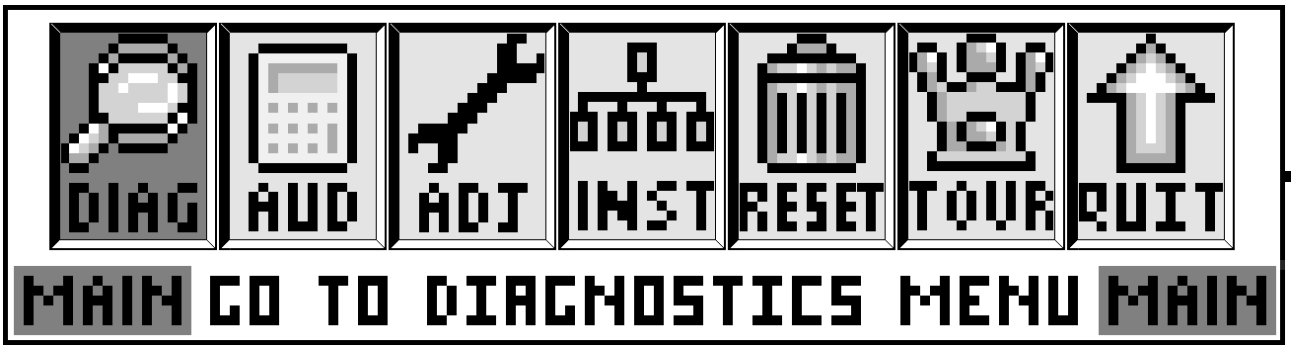

Press the **Black "ENTER" Button** to *activate* this **ICON**. The **DIAGNOSTICS MENU** now appears with the "SW" *Icon* (**GO TO SWITCH MENU**) flashing; use the **Red "LEFT"** or **Green "RIGHT" Buttons**, until the "FUSES" *Icon* (**GO TO FUSE TABLE**) is flashing:

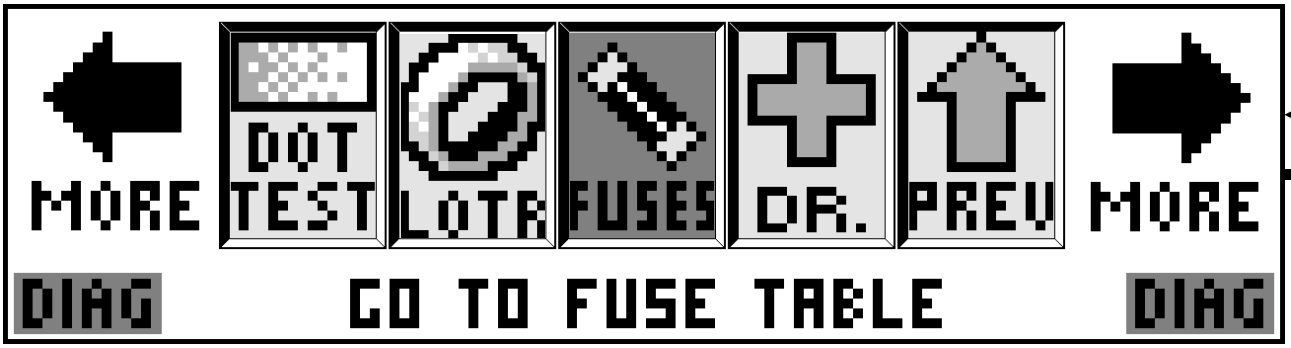

Press the **Black Button** to *activate* this **ICON**. The **FUSE TABLE** now appears.

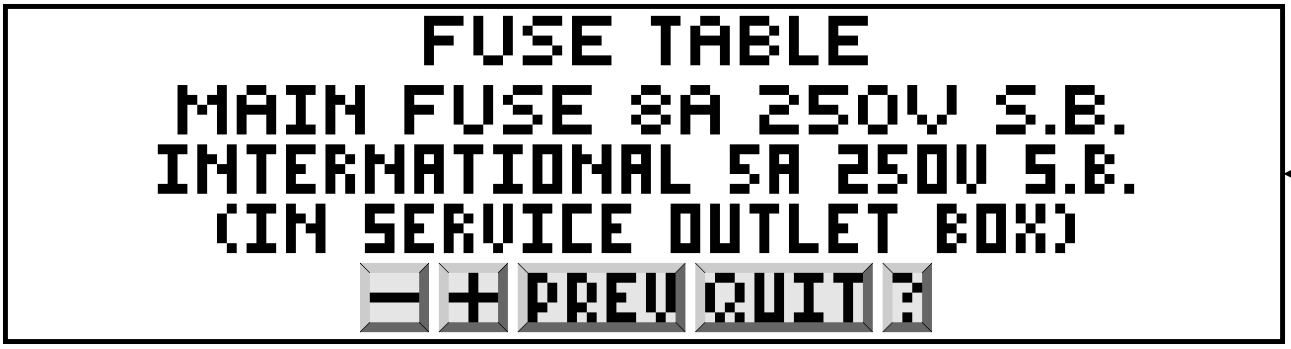

Select and *activate* the "+" *Mini-Icon* to view the next fuse in the group. Continue to select either the "+" or "-" *Mini-Icons* to view each fuse one at a time. The display will describe the fuse identification number (e.g. Main, F1, F6, F7, etc.), rating of fuse (e.g. 5A 250v S.B. - i.e. 5 Amp, 250 volt, Slo-Blo), location of fuse (i.e. Backbox: Board Name located on; or Cabinet: Under the playfield or in Service Outlet), and 'use of fuse' (e.g. 90v DC High Voltage Power, etc.). The current fuse listed will remain in the display until the next fuse is chosen or when the Sub-Menu is exited by selecting & *activating* the "PREV" or "QUIT" *Mini-Icons*.

Go To Fuse Table continued on the next page.

Backbox PCB Fuses, ROMs, Bridges, Relays, P/F & Cabinet Fuses, Cab. Switches

CAUTION: *For continued protection against risk of fire, replace only with same type of fuse having the same electrical rating!*

QUICK REFERENCE FUSE CHART

Backbox Fuses			
LOC: DISPLAY POWER SUPPLY (P.S.) BOARD			
F1	¾A 250v S.B.	90v DC	High Voltage Display
LOC: I / O POWER DRIVER BOARD			
F6	7A 250v S.B.	50v DC	Primary High Power Coils/Flippers
F7	5A 250v S.B.	20v DC	Low Power Coils
F8	5A 250v S.B.	12v DC	Logic Power
F9	5A 250v S.B.	12v DC	Logic Power
F20	**4A 250v S.B.**	50v DC	Magnet ◄◄◄ **THIS GAME ONLY**
F21	3A 250v S.B.	50v DC	Coils
F22	8A 250v S.B.	18v DC	Controlled Lamps
F23	4A 250v S.B.	5v DC	Logic
F24	5A 250v S.B.	6.3v AC	G.I. Lamps (BRN-WHT to WHT-BRN)
F25	5A 250v S.B.	6.3v AC	G.I. Lamps (YEL to WHT-YEL)
F26	5A 250v S.B.	6.3v AC	G.I. Lamps (GRN to WHT-GRN)
F27	5A 250v S.B.	6.3v AC	G.I. Lamps (VIO to WHT-VIO)
F28	3A 250v S.B.	24v AC	**Not Used / Spare**
Cabinet Fuses			
LOC: SERVICE (AC) OUTLET BOX (Cabinet Bottom)			
n/a	8A 250v S.B.	115v AC	Main Fuse Line (Domestic or USA)
n/a	5A 250v S.B.	220v AC	Main Fuse Line (International)
Playfield (P/F) Fuses			
LOC: UNDER PLAYFIELD (near Flippers)			
n/a	3A 250v S.B.	50v DC	Right Flipper (BLU-YEL⇆RED-YEL)
n/a	3A 250v S.B.	50v DC	Left Flipper (GRY-YEL⇆RED-YEL)
n/a	3A 250v S.B.	50v DC	Loop Diverter (GRY-YEL⇆YEL-VIO)

For locations & more information on fuses, see Sec. ***5***, *Chapter* ***2***.

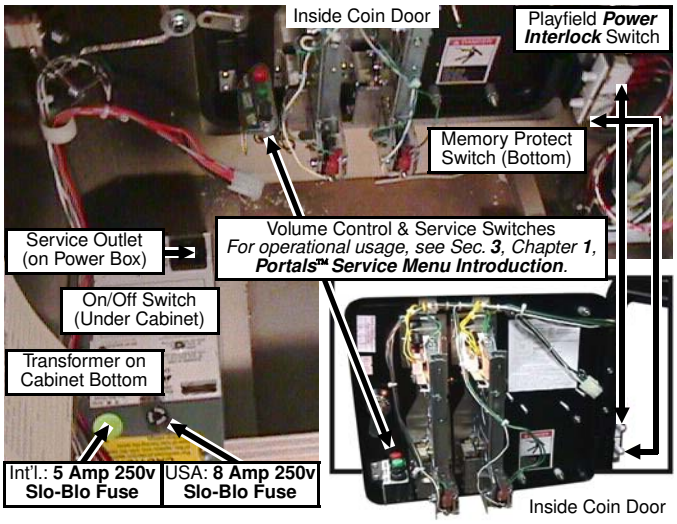

ROM TYPE on BD	LOCATION	SIZE	PART NUMBER
CPU Sound	U7	512K	965-0401-80
CPU Game	U210	1 MB	965-0402-80
CPU Voice ROM 1	U17	8 MB	965-0403-80
CPU Voice ROM 2	U21	8 MB	965-0404-80
CPU Voice ROM 3	U36	8 MB	965-0405-80
CPU Voice ROM 4	U37	8 MB	965-0406-80
DISPLAY Controller	U5	4 MB	965-0407-80

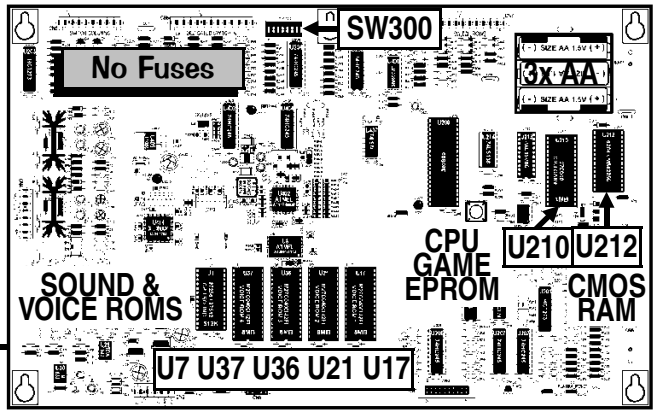

◄ Display Power Supply Bd.

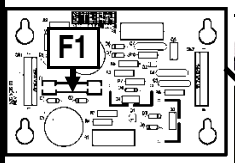

Solenoid Expander Board ‡

Tournament Interface Board ‡

‡ UK or Tournament GAMES ONLY

*For more info., see Section **5**, Chp. **4**, **PCBs** (Yellow Pages)*

For Schematics and/or Component Parts on PC Boards shown on this page, review Section 5, Chapter 4, Printed Circuit Boards (The Yellow Pages).

CPU/Sound Bd. II w/ATMEL ▲

I/O Power Driver Board ▼

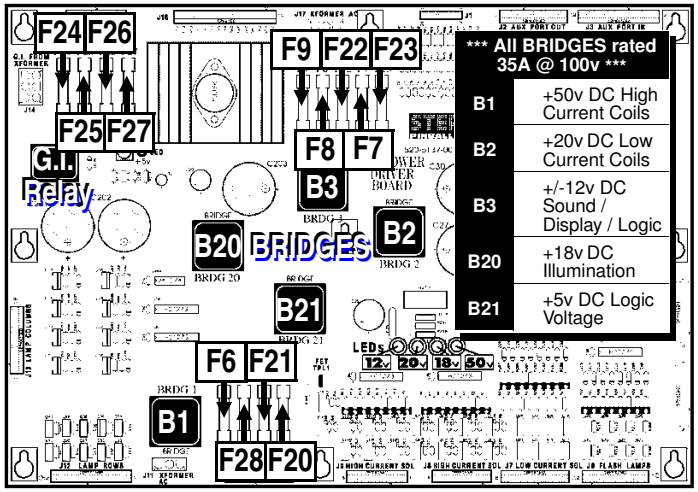

Display Controller Bd. ►

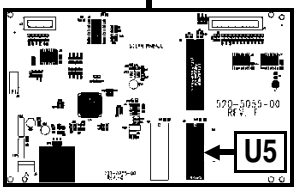

The Display Controller has the Display EPROM (Location: U5 / ROM 0). This board is located behind the 128 X 32 Dot Matrix Display Board.

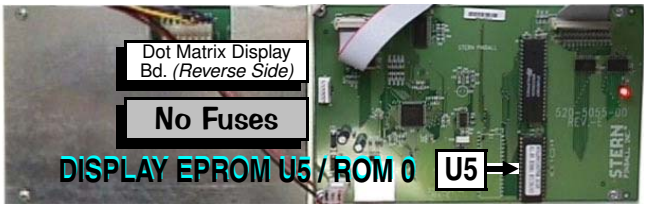

Go To Diagnostics Menu

Dr. Pinball

To initiate, from the **DIAGNOSTICS MENU**, select the Cross "DR." *Icon* with either the **Red "LEFT"** or **Green "RIGHT" Buttons** and press the **Black "ENTER" Button**. This will bring you (the operator / technician) into **DR. PINBALL** (**Flow Chart Menus**) which offers you a choice of three (3) *Icons:* Coil "DR.", Switch "DR." and Lamp "DR." *Icons.* Selecting a particular *Icon* will give you a choice of which specific Coil *(any and all coil assemblies such as Flippers, VUKs, Magnets, etc.),* Switch or Lamp circuit needs to be diagnosed. *Dr. Pinball* will now display a question or give a procedure to follow such as "Does the lamp turn on?" or "Check bridge rectifier BR-20, if short replace." When *Dr. Pinball* displays a question or requests a procedure, *Dr. Pinball* will expect a response such as "NO" or "YES" *(see below examples of the Mini-Icons* which will prompt the operator). You the operator/technician must respond by using the **Red** or **Green Buttons** to "SELECT" a *Mini-Icon* and the **Black Button** to "ACTIVATE or ENTER" your selection.

Coil Flow Chart

To initiate, from the **DR. PINBALL MENU**, select the Coil "DR." *Icon* with either the **Red** or **Green Buttons** and press the **Black Button**. This is the **Coil Flow Chart**. Follow the questions, answering by using the *Mini-Icons* in the display.

Switch Flow Chart

To initiate, from the **DR. PINBALL MENU**, select the Switch "DR." *Icon* with either the **Red** or **Green Buttons** and press the **Black Button**. This is the **Switch Flow Chart**. Follow the questions, answering by using the *Mini-Icons* in the display.

Lamp Flow Chart

To initiate, from the **DR. PINBALL MENU**, select the Lamp "DR." *Icon* with either the **Red** or **Green Buttons** and press the **Black Button**. This is the **Lamp Flow Chart**. Follow the questions, answering by using the *Mini-Icons* in the display.

The following are the *Mini-Icons* with explanations for the **DR. PINBALL** Sub-Menus:

Select and *activate* either the "-" or "+" *Mini-Icons* to diagnose a Coil, Lamp or Switch. Select and *activate* the "RUN" *Mini-Icon* to test selected item. The "PREV" *Mini-Icon* allows you to go back to previous question. Select the "QUIT" *Mini-Icon* to exit **Portals™** completely. Select the "?" *Mini-Icon* (Help) to see directions on button usage.

Select and *activate* either the "NO or "YES" *Mini-Icons* to answer a question given. Select and *activate* the "END" *Mini-Icon* to change to a new item to test. The "PREV" *Mini-Icon* allows you to go back to previous question. Select the "QUIT" *Mini-Icon* to exit **Portals™** completely. Select the "?" *Mini-Icon* (Help) to see directions on button usage.

After a diagnosis is given, select and *activate* the "END" *Mini-Icon* to change to a new item to test. The "PREV" *Mini-Icon* allows you to go back to previous display. Select the "QUIT" *Mini-Icon* to exit **Portals™** completely. Select the "?" *Mini-Icon* (Help) to see directions on button usage.

In **COIL FLOW CHART MENU**, select and *activate* the "PULSE" *Mini-Icon* to pulse the coil selected. Select and *activate* the "END" *Mini-Icon* to change to a new item to test. The "PREV" *Mini-Icon* allows you to go back to previous question. Select the "QUIT" *Mini-Icon* to exit **Portals™** completely. Select the "?" *Mini-Icon* (Help) to see directions on button usage.

STARTING METER Reading : ☐☐☐☐☐☐

STARTING METER Date (MM/DD/YR) : ☐☐☐☐0☐

AUDITOR'S NAME :

CURRENT VOLUME SETTING: ▶ ▶ ▶ ☐☐

CURRENT METER Reading : ☐☐☐☐☐☐

AUDIT Date (MM/DD/YR) : ☐☐☐☐0☐

CPU Version : ☐☐.☐☐

DISPLAY Version : ☐☐.☐

GAME LOCATION NAME :

EARNINGS & STANDARD AUDIT TABLES

EARNINGS AUDITS

01-14 ✍ = ✎

Audit definitions follow in this Chapter.

01	TOTAL PAID CREDITS
02	FREE GAME PERCENTAGE
03	AVERAGE BALL TIME
04	AVERAGE GAME TIME
05	COINS THRU LEFT SLOT
06	COINS THRU RIGHT SLOT
07	COINS THRU CENTER SLOT
08	COINS THRU 4TH SLOT
09	COINS THRU 5TH SLOT
10	COINS THRU 6TH SLOT
11	TOTAL COINS
12	TOTAL EARNINGS
13	METER CLICKS
14	SOFTWARE METER

STANDARD AUDITS

01-68 ✍ = ✎

Audit definitions follow in this Chapter.

To track Feature & Tournament Audits, see Pages 36 or 54.

01	TOTAL BALLS PLAYED
02	TOTAL EXTRA BALLS
03	EXTRA BALL PERCENT
04	REPLAY 1 AWARDS
05	REPLAY 2+ AWARDS
06	TOTAL REPLAYS
07	REPLAY PERCENT
08	TOTAL SPECIALS
09	SPECIAL PERCENT
10	TOTAL MATCHES
11	HIGH SCORE AWARDS
12	HIGH SCORE PERCENT
13	TOTAL FREE PLAYS
14	TOTAL PLAYS
15	0–1.9M SCORES
16	2M–3.9M SCORES
17	4M–5.9M SCORES
18	6M–7.9M SCORES
19	8M–9.9M SCORES
20	10M–12.4M SCORES
21	12.5M–14.9M SCORES
22	15M–17.4M SCORES
23	17.5M–19.9M SCORES
24	20M–22.4M SCORES
25	22.5M–24.9M SCORES
26	25M–34.9M SCORES
27	35M–49.9M SCORES
28	50M–74.9M SCORES
29	75M–99.9M SCORES
30	100M–149.9M SCORES
31	150M+ SCORES
32	AVERAGE SCORES
33	SERVICE CREDITS
34	BALL SEARCH STARTED
35	LOST BALL FEEDS
36	LOST BALL GAME STARTS
37	LEFT DRAINS
38	CENTER DRAINS
39	RIGHT DRAINS
40	TILTS
41	TOTAL BALLS SAVED
42	PROPRIETARY
43	PROPRIETARY
44	PROPRIETARY
45	PROPRIETARY
46	PROPRIETARY
47	PROPRIETARY
48	PROPRIETARY
49	PROPRIETARY
50	BASE REPLAY
51	LEFT FLIPPER USED
52	RIGHT FLIPPER USED
53	PROPRIETARY
54	PROPRIETARY
55	0–1 MINUTE GAMES
56	1 – 1.5 MINUTE GAMES
57	1.5 – 2 MINUTE GAMES
58	2 – 2.5 MINUTE GAMES
59	2.5 – 3 MINUTE GAMES
60	3 – 3.5 MINUTE GAMES
61	3.5 – 4 MINUTE GAMES
62	4 – 5 MINUTE GAMES
63	5 – 6 MINUTE GAMES
64	6 – 8 MINUTE GAMES
65	8 – 10 MINUTE GAMES
66	10 – 15 MINUTE GAMES
67	15+ MINUTE GAMES
68	RECENT REPLAY PERCENT

Note: *Audits are subject to change (with or without notice).*

Go To Audits Menu

back to Page 32

Go To Audits Menu

Overview

The **Portals™ Service Menu System** provides **236** Audits for accounting purposes and for evaluation of *Game Programming*. The Audits are divided into 3 groups: • **Earnings Audits** (Audits **01-14**), • **Standard Audits** (Audits **01-68**) and • **Feature Audits (Programming Use Only)** (Audits **01-154**). *For details on **Tournament Audits**, see Section **3**, Chapter **7**, **GO TO TOURNAMENT MENU**.* Audits which are named **Proprietary** are also for ***Future Expansion*** or ***Programming***. Game code may get upgraded during production; compare all Audits in the display with the manual and make any corrections to the Audit Table *(previous page)*, as necessary. Audits are subject to change (with or without notice). To view Audits in the display, enter the **Portals™ Service Menu System**. *For how to **RESET** Audits, see Section **3**, Chapter **6**, **GO TO RESET MENU**.*

EXPLANATION & USAGE OF COMMON LARGE & MINI-ICONS USED IN VARIOUS MENUS & SUB-MENUS:

These ***non-selectable Icons*** appear in the *selected Menu* only when there are **MORE** Icons to the **LEFT** or to the **RIGHT** available for selection.

Select and activate to return to the **PREVIOUS** Menu.

Select and activate to **QUIT**, *exits & returns to the* ***Attract Mode***.

Select and activate to view **HELP** *Screens of the current Menu*.*

Select and activate to:

Move **LEFT** *or* **RIGHT**, *select previous / next or move backwards / forwards.*

**** Help Note: An explanation of each Mini-Icon at that menu level will cycle continuously. To exit a display where no Mini-Icons are available for selection, pressing any button will exit the display.***

GO TO AUDITS MENU

After entering **Portals™**, the **MAIN MENU** now appears. Select the "AUD" *Icon* in the **MAIN MENU** with either the **Red "LEFT"** or **Green "RIGHT" Buttons** (the **Flipper Buttons** operates in the same manner) and press the **Black "ENTER" Button** (the **Start Button** operates in the same manner). The **AUDITS MENU** appears. Continue through this chapter for the explanation & usage of the *Icons* in the **AUDITS MENU**.

Earnings Audits (01-14)

To initiate, from the **AUDITS MENU**, select the "EARN" *Icon* with either the **Red "LEFT"** or **Green "RIGHT" Buttons** and press the **Black "ENTER" Button**. Select and *activate* either of the ">>" *Mini-Icons* to view the next or previous Audit in this group. The display will describe the **Audit Number**, **Audit Name** and the **Current Audit Total** (Value). The current Audit will remain in the display until the next Audit is viewed or when this Menu is exited.

Nr.	EARNINGS AUDIT NAME: Definition
01	**TOTAL PAID CREDITS:** Provides the total number of *Paid Credits.*
02	**FREE GAME PERCENTAGE:** Provides the percentage total by dividing Standard Audit **13**, **TOTAL FREE PLAYS**, by Standard Audit **14**, **TOTAL PLAYS**.
03	**AVERAGE BALL TIME:** In seconds, the average ball time is derived from the total play time divided by Standard Audit **01**, **TOTAL BALLS PLAYED**.
04	**AVERAGE GAME TIME:** The average game time is expressed in minutes and seconds (0:00).
05	**COINS THRU LEFT SLOT:** Provides the total number of times Coin Mechanism Switch 06 was closed.
06	**COINS THRU RIGHT SLOT:** Provides the total number of times Coin Mechanism Switch 04 was closed.
07	**COINS THRU CENTER SLOT:** Provides the total number of times Coin Mechanism Switch 05 was closed.
08	**COINS THRU 4TH SLOT:** Provides the total number of times Coin Mechanism Switch 02 was closed.
09	**COINS THRU 5TH SLOT:** Provides the total number of times Coin Mechanism Switch 07 was closed.
10	**COINS THRU 6TH SLOT:** Provides the total number of times Coin Mechanism Switch 03 was closed.
11	**TOTAL COINS:** Provides the total amount of coins registered through all the *Coin Slots.*
12	**TOTAL EARNINGS:** The total cash value accumulated since the last Factory Reset occurred. *See Section **3**, Chapter **6**, **GO TO RESET MENU**, **Reset Coin Audits**.*
13	**METER CLICKS:** Provides the total number of money clicks accumulated. *Based on the country's lowest coin denomination used for the game credit.*
14	**SOFTWARE METER:** Provides the continuing total of Meter Clicks. *This audit cannot be reset; the display shows the constant addition of Meter Clicks.*

Standard Audits (01-68)

To initiate, from the **AUDITS MENU**, select the "S.P.I." *Icon* with either the **Red "LEFT"** or **Green "RIGHT" Buttons** and press the **Black "ENTER" Button**. Select and *activate* either of the ">>" *Mini-Icons* to view the next or previous Audit in this group. The display will describe the **Audit Number**, **Audit Name** and the **Current Audit Total** (Value). The current Audit will remain in the display until the next Audit is viewed or when this Menu is exited.

Nr.	STANDARD AUDIT NAME: Definition
01	**TOTAL BALLS PLAYED:** Provides the total number of *Regular* and *Extra Balls.*
02	**TOTAL EXTRA BALLS:** Provides the total number of *Extra Balls* awarded.
03	**EXTRA BALLS PERCENT:** Provides the percentage total by dividing Standard Audit **02**, **TOTAL EXTRA BALLS**, by Standard Audit **14**, **TOTAL PLAYS**.
04	**REPLAY 1 AWARDS:** Provides the total *Awards (Credits, Extra Balls or Scores)* for Level 1.
05	**REPLAY 2+ AWARDS:** Provides the total *Awards (Credits, Extra Balls or Scores)* for Level 2 or higher.
06	**TOTAL REPLAYS:** Provides the total *Awards (Credits, Extra Balls or Scores)* for exceeding *Replay Score Levels.*
07	**REPLAY PERCENT:** Provides the percentage total from dividing Standard Audit **06**, **TOTAL REPLAYS**, by Standard Audit **14**, **TOTAL PLAYS**. The percentage reflects replay total awards for exceeding replay score levels.
08	**TOTAL SPECIALS:** Provides the total *Awards (Credits, Extra Balls, or Scores)* for making *Specials.*
09	**SPECIAL PERCENT:** Provides the percentage total by dividing Standard Audit **08**, **TOTAL SPECIALS**, by Standard Audit **14**, **TOTAL PLAYS**.
10	**TOTAL MATCHES:** Provides the total *Credits* awarded for matching the last two digits of the score with the *System-Generated Match Number* at the end of the game. Percentage of *Match Credits* is adjustable from **0%** to **10%** by Standard Adjustment **13**, **MATCH PERCENTAGE**, if enabled. *See Section **3**, Chapter **4**, **GO TO ADJUSTMENTS MENU**, **Standard Adjustments**.*
11	**HIGH SCORE AWARDS:** Provides the total *Awards (Credits, Extra Balls, or Scores)* for exceeding the High-Score-To-Date scores.
12	**HIGH SCORE PERCENT:** Provides the percentage total by dividing Standard Audit **11**, **HIGH SCORE AWARDS**, by Standard Audit **14**, **TOTAL PLAYS**.
13	**TOTAL FREE PLAYS:** Provides the total *Free Credits* for *Replays, High-Score-To-Date, Specials and Match.*
14	**TOTAL PLAYS:** This total is derived by adding the sum of Earnings Audit **01**, **TOTAL PAID CREDITS**, and Standard Audit **13**, **TOTAL FREE PLAYS**. ***Note:*** *Free Credits are not recorded in the Audit until they are actually used.*
15	**0–1.9M SCORES:** Provides the total number of games the Player's final score was **0** and **1,999,990** points.
16	**2M–3.9M SCORES:** ... and the Player's final score was between **2,000,000** and **3,999,990** points.
17	**4M–5.9M SCORES:** ... and the Player's final score was between **4,000,000** and **5,999,990** points.
18	**6M–7.9M SCORES:** ... and the Player's final score was between **6,000,000** and **7,999,990** points.
19	**8M–9.9M SCORES:** ... and the Player's final score was between **8,000,000** and **9,999,990** points.
20	**10M–12.4M SCORES:** ... and the Player's final score was between **10,000,000** and **12,499,990** points.
21	**12.5M–14.9M SCORES:** ... and the Player's final score was between **12,500,000** and **14,499,990** points.
22	**15M–17.4M SCORES:** ... and the Player's final score was between **15,000,000** and **17,499,990** points.
23	**17.5M–19.9M SCORES:** ... and the Player's final score was between **17,500,000** and **19,999,990** points.
24	**20M–22.4M SCORES:** ... and the Player's final score was between **20,000,000** and **22,499,990** points.
25	**22.5M–24.9M SCORES:** ... and the Player's final score was between **22,500,000** and **24,999,990** points.
26	**25M–34.9M SCORES:** ... and the Player's final score was between **25,000,000** and **34,999,990** points.
27	**35M–49.9M SCORES:** ... and the Player's final score was between **35,000,000** and **49,999,990** points.
28	**50M–74.9M SCORES:** ... and the Player's final score was between **50,000,000** and **74,999,990** points.
29	**75M–99.9M SCORES:** ... and the Player's final score was between **75,000,000** and **99,999,990** points.
30	**100M–149.9M SCORES:** ... and the Player's final score was between **100,000,000** and **149,999,990** points.
31	**150M+ SCORES:** Provides the total number of games the Player's final score was **150,000,000** points and over.
32	**AVERAGE SCORES:** This total is derived from adding the *Final Score* of each game to a table and dividing this sum by Standard Audit **14**, **TOTAL PLAYS**.

Standard Audits 33-68 continued on the next page.

	STANDARD AUDIT NAME: Definition
33	**SERVICE CREDITS:** Provides the total number of times the **Portals™ Green Button** (Dedicated Switch 7) was pushed in **Attract Mode**. *See Section **3**, Chapter **1**, **Service Switch Set Access & Use**, for how to receive Service Credits. See Sec. **3**, Chp. **6**, **GO TO RESET MENU**, **Reset Credits**, for how to delete Service (and Paid Credits).*
34	**BALL SEARCH STARTED:** Provides the total number of times the game performed a *Ball Search*.
35	**LOST BALL FEEDS:** Provides the total number of times the game added a pinball to play when it could not find a pinball after *Ball Search*. *See Section **3**, Chapter **2**, **GO TO DIAGNOSTICS MENU**, **Technicians Alert** [Pinball Detection].*
36	**LOST BALL GAME STARTS:** Provides the total number of times the game started with a pinball missing from the ball trough at the start of a game. *See Section **3**, Chapter **2**, **GO TO DIAGNOSTICS MENU**, **Technicians Alert** [Pinball Detection].*
37	**LEFT DRAINS:** Provides the total number of times Rollover Switch 57 was closed.
38	**CENTER DRAINS:** Provides the total number of times the pinball had drained when the last switch closed was not Switch 57 or Switch 60.
39	**RIGHT DRAINS:** Provides the total number of times Rollover Switch 60 was closed.
40	**TILTS:** Provides the total number of times Contact Switch 56 was closed.
41	**TOTAL BALLS SAVED:** Provides the total number of times this feature was used *(this feature can be turned ON or OFF, see Standard Adj. **38**, **FREEZE TIME** in Section **3**, Chapter **4**, **GO TO ADJUSTMENTS MENU, Standard Adjustments**).* This feature is enabled at the start of each pinball and is disabled as soon as a predetermined number of switches are "closed" ***or*** the allocated time has expired.
>>	**42 - 49 PROPRIETARY:** Proprietary Audits are used for ***Future Expansion*** or ***Programming***.
50	**BASE REPLAY:** Provides the current base *Replay Level Score*.
51	**LEFT FLIPPER USED:** Provides the total number of times the **Left Flipper Button** (Dedicated Switch 1) was pushed in **Game Mode**.
52	**RIGHT FLIPPER USED:** Provides the total number of times the **Right Flipper Button** (Dedicated Switch 3) was pushed in **Game Mode**.
>>	**53 - 54 PROPRIETARY:** Proprietary Audits are used for ***Future Expansion*** or ***Programming***.
55	**0 - 1 MINUTE GAMES:** Provides the total number of games the total game time was between **0:00** and **1:00** minute.
56	**1 – 1.5 MINUTE GAMES:** Provides the total number of games the total game time was between **1:00** and **1:30** minutes.
57	**1.5 – 2 MINUTE GAMES:** Provides the total number of games the total game time was between **1:30** and **2:00** minutes.
58	**2 – 2.5 MINUTE GAMES:** Provides the total number of games the total game time was between **2:00** and **2:30** minutes.
59	**2.5 – 3 MINUTE GAMES:** Provides the total number of games the total game time was between **2:30** and **3:00** minutes.
60	**3 – 3.5 MINUTE GAMES:** Provides the total number of games the total game time was between **3:00** and **3:30** minutes.
61	**3.5 – 4 MINUTE GAMES:** Provides the total number of games the total game time was between **3:30** and **4:00** minutes.
62	**4 – 5 MINUTE GAMES:** Provides the total number of games the total game time was between **4:00** and **5:00** minutes.
63	**5 – 6 MINUTE GAMES:** Provides the total number of games the total game time was between **5:00** and **6:00** minutes.
64	**6 – 8 MINUTE GAMES:** Provides the total number of games the total game time was between **6:00** and **8:00** minutes.
65	**8 – 10 MINUTE GAMES:** Provides the total number of games the total game time was between **8:00** and **10:00** minutes.
66	**10 – 15 MINUTE GAMES:** Provides the total number of games the total game time was between **10:00** and **15:00** minutes.
67	**15+ MINUTE GAMES:** Provides the total number of games the total game time was **15:00** and over.
68	**RECENT REPLAY PERCENT:** *Percent figured with programming thresholds for a determined number of games (again based on programming thresholds). The percentage reflects replay total awards for exceeding replay score levels.*

Feature Audits (01-154)

To initiate, from the **AUDITS MENU**, select the "LOTR" *Icon* with either the **Red "LEFT"** or **Green "RIGHT" Buttons** and press the **Black "ENTER" Button**. Select and *activate* either of the ">>" *Mini-Icons* to view the next or previous Audit in this group. The display will describe the **Audit Number**, **Audit Name** and the **Current Audit Total** (Value). The current Audit will remain in the display until the next Audit is viewed or when this Menu is exited. **Audits Definition: Programming Use Only.** *The proprietary information provides the total number of times a feature was started, awarded, lit, played and/or completed (awarded); also, the total number of Switch Closures during certain modes or features are tracked (a predetermined single/multiple variations of switch closures are used to determine the lighting and/or completion of the feature stated).*

FEATURE AUDIT TABLE

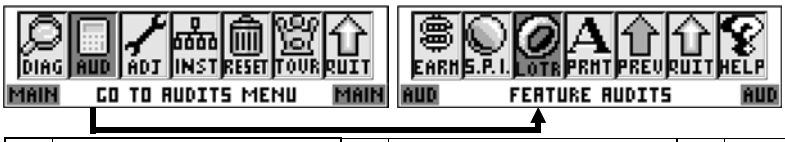

FEATURE AUDITS
**01-154 = **
***** PROGRAMMING USE ONLY *****
UNLABELED BOXES ARE FOR FUTURE EXPANSION.

01	LEFT VUK	40	DWARF RINGS COMPLETD	79	FOTR MB 2+ STARTED	118	DESTROY RING STARTED
02	LEFT VUK DIRECT HIT	41	ELF RINGS COMPLETED	80	FOTR MB WON	119	DESTROY RING WON
03	LEFT ORBIT	42	RING MANIA STARTED	81	TROLL HITS	120	GIFT OF THE ELVES LT
04	LEFT RAMP	43	RING MANIA 2+ STARTED	82	TROLL KILLS	121	GIFT EXTRA BALL
05	CENTER LOOP	44	MANIA RINGS COLLECTD	83	BALROG HITS	122	GIFT RING MB
06	SPINS	45	MANIA SHOTS COMPLETD	84	BRIDGE CROSSES	123	GIFT BIG POINTS
07	RING	46	MANIA 1X JACKPOT	85	BALROG KILLS	124	GIFT SPECIAL
08	RIGHT VUK	47	MANIA 2X JACKPOT	86	SWORD LOCKS LIT	125	GIFT 2X SCORING
09	RT VUK BEHIND	48	MANIA 3X JACKPOT	87	SWORD LOCK 1	126	GIFT SUPER MANIA
10	RIGHT RAMP	49	MANIA 4X JACKPOT	88	SWORD LOCK 2	127	GIFT WIZARD MODE
11	RINGWRAITH	50	MANIA 5X JACKPOT	89	TTT MB STARTED	128	PALANTIR LIT
12	RIGHT ORBIT	51	MANIA EXTRA BALL LIT	90	TTT MB 2+ STARTED	129	PALANTIR COLLECTED
13	SPOT RING TARGET	52	RING MODE LIT	91	TTT 1X JACKPOT	130	RING MB RING SHOTS
14	ORTHANC ARRIVALS	53	ESCAPE MODE STARTED	92	TTT 2X JACKPOT	131	RING MB S. JACKPOTS
15	BARAD-DûR ARRIVALS	54	ESCAPE MODE WON	93	TTT 3X JACKPOT	132	RING MB 2.5M
16	ORC LANES	55	BATTLE MODE STARTED	94	TTT 4X JACKPOT	133	RING MB LIGHT E. BALL
17	POP HITS	56	BATTLE MODE WON	95	TTT 5X JACKPOT	134	RING MB 5M
18	LEFT OUTLANE	57	WARG MODE STARTED	96	TTT 6X JACKPOT	135	RING MB LITE SPECIAL
19	LEFT INLANE	58	WARG MODE WON	97	TTT 7X JACKPOT	136	RING MB 7.5M
20	RIGHT INLANE	59	ENT MODE STARTED	98	TTT STAGES SURVIVED	137	SRMMB RING SHOTS
21	RIGHT OUTLANE	60	ENT MODE WON	99	TTT S. JACKPOT LIT	138	SRMMB SHOTS COMPLETE
22	LANE S. S. PICKED	61	SHELOB MODE STARTED	100	TTT SJP COLLECTED	139	SRMMB JACKPOTS
23	TOWER S. S. PICKED	62	SHELOB MODE WON	101	TTT MB WON	140	SRMMB TOTAL JACKPT X
24	FLIPPER S. S. PICKED	63	WITCHKING MODE STRTD	102	PATH ADVANCED	141	SRMMB SUPER JACKPOTS
25	LANE SKILL SHOT MADE	64	WITCHKING MODE WON	103	PATH ACCESSED	142	VALINOR STARTED
26	LANE S. S. MADE	65	BOOK MODE LIT	104	PATH TIME SOULS	143	BALROG STARTED
27	TOWER S. S. MADE	66	MOOK MODE STARTED	105	PATH UNLIT SOULS	144	BALROG HITS
28	FLIPPER S. S. MADE	67	BOOK MODE JACKPOTS	106	PATH LIT SOULS	145	CAVE SHOTS
29	ORC COMPLETED	68	BOOK MODE WON	107	PATH BLINKING SOULS	146	CAVE BALROG
30	HUMAN RINGS COLLECTD	69	MYSTERY LIT	108	SOULS COMPLETED	147	CAVE SUPER SPINNER
31	DWARF RINGS COLLECTD	70	MYSTERY COLLECTED	109	ROTK MB STARTED	148	CAVE SUPER POPS
32	ELF RINGS COLLECTED	71	MYSTERY E. B. LIT	110	ROTK MB 2+ STARTED	149	CAVE SUPER RAMPS
33	RINGS SPOTTED	72	MYSTERY SPECIAL LIT	111	ROTK JACKPOTS	150	CAVE SUPER LOOPS
34	HUMAN RING BONUS	73	GOLLUM MULTIBALL LIT	112	ROTK LEVELS COMPLETE	151	CAVE SUPER EVERYTHING
35	DWARF RING BONUS	74	GOLLUM MBALL STARTED	113	ROTK MULT INCREASED	152	BARAD-DÛR HOLD RING VALUE
36	ELF RING BONUS	75	GOLLUM MBALL 2+ STRTD	114	ROTK S. JACKPOT LIT	153	BARAD-DÛR LIGHT EXTRA BALL
37	RING COMBOS	76	FELLOWSHIP COLLECTED	115	ROTK SJP COLLECTED	154	BARAD-DÛR POINTS
38	RING COMBO THRSHLDS	77	FELLOWSHIP COMPLETED	116	ROTK MB WON		
39	HUMAN RINGS COMPLETD	78	FOTR MB STARTED	117	DESTROY RING LIT		

Note: *Audits are subject to change (with or without notice).*

Go To Audits Menu

Go To Printer Menu (OPTIONAL USE ONLY)

Operational Usage Note: *The use of the following Sub-Menus are* ***OPTIONAL*** and provided as a *convenience only.* ***No special equipment was included with your Pinball Game.*** To initiate, from the **AUDITS MENU**, select the "PRNT" *Icon* with either the **Red "LEFT"** or **Green "RIGHT" Button** and press the **Black "ENTER" Button**. The **PRINTER MENU** appears. A **Tournament Serial Interface (TSI) Board** and a **RS-232 Communication Device** *(which can download serial information)* are required for proper operation of these Sub-Menus. *Entering the menus & selecting/activating the Icons without the equipment mentioned, will not affect the Pinball Game nor the operation of the* ***Portals™ Service Menu System*** *in any way.* An optional Printer Kit is available for purchase *(contact your local distributor).*

Quick Printout

To initiate, from the **PRINTER MENU**, select the "QUIK" *Icon* with either the **Red** or **Green Button** and press the **Black Button**. Select either the "-" or "+" *Mini-Icon* and press the **Black Button** to start the printout. Per the display instruction, the **Start Button** can also be pressed to start the printout. Only the **Earnings Audits** can be retrieved and/or printed for further processing.

Full Printout

To initiate, from the **PRINTER MENU**, select the "ALISON" *Icon* with either the **Red** or **Green Button** and press the **Black Button**. Select either the "-" or "+" *Mini-Icon* and press the **Black Button** to start the download. Per the display instruction, the **Start Button** can also be pressed to start the download. All **Earnings**, **Standard**, **Feature** & **Tournament Audits** can be retrieved and/or printed for further processing.

Reset Printer

To initiate, from the **PRINTER MENU**, select the "RESET" *Icon* with either the **Red** or **Green Button** and press the **Black Button**. Select either the "-" or "+" *Mini-Icon* and press the **Black Button** to clear the "Nº of copies printed" count total appearing in the display. ***Operational Usage Note:*** *Activating the "QUIK" Icon (in the previous Quick Printout)* ***without*** *the special equipment and unique software, will still provide a "count total" in this Reset Printer Menu, which does not affect the operation of the* ***Portals™ Service Menu System*** *in any way.* Activating this "RESET" *Icon* will reset the "count total" in the display to **00**.

FEATURE AUDIT ABBREVIATIONS USED IN THIS CHAPTER:

FOTR : The Fellowship of the Ring™		**TTT :** The Two Towers™		**ROTK :** The Return of the King™	
	E. B. : Extra Ball		**LT :** Lit		**MB :** Multiball
S. S. : Skill Shot		**S. JACKPOT / SJP :** Super Jackpot		**SRMMB :** Super Ring Mania Multiball	

For how to RESET Audits, see Section 3, Chapter 6, GO TO RESET MENU.

STARTING METER Reading : _____

STARTING METER Date (MM/DD/YR) : _____ 0 _____

AUDITOR'S NAME :

CURRENT VOLUME SETTING: ▶ ▶ ▶ _____

CURRENT METER Reading : _____

AUDIT Date (MM/DD/YR) : _____ 0 _____

CPU Version : _____ . _____

DISPLAY Version : _____ . _____

GAME LOCATION NAME :

EARNINGS & STANDARD AUDIT TABLES

EARNINGS AUDITS 01-14 ✍ = ✎

01	TOTAL PAID CREDITS
02	FREE GAME PERCENTAGE
03	AVERAGE BALL TIME
04	AVERAGE GAME TIME
05	COINS THRU LEFT SLOT
06	COINS THRU RIGHT SLOT
07	COINS THRU CENTER SLOT
08	COINS THRU 4TH SLOT
09	COINS THRU 5TH SLOT
10	COINS THRU 6TH SLOT
11	TOTAL COINS
12	TOTAL EARNINGS
13	METER CLICKS
14	SOFTWARE METER

STANDARD AUDITS 01-68 ✍ = ✎

01	TOTAL BALLS PLAYED
02	TOTAL EXTRA BALLS
03	EXTRA BALL PERCENT
04	REPLAY 1 AWARDS
05	REPLAY 2+ AWARDS
06	TOTAL REPLAYS
07	REPLAY PERCENT
08	TOTAL SPECIALS
09	SPECIAL PERCENT
10	TOTAL MATCHES
11	HIGH SCORE AWARDS
12	HIGH SCORE PERCENT
13	TOTAL FREE PLAYS
14	TOTAL PLAYS
15	0–1.9M SCORES
16	2M–3.9M SCORES
17	4M–5.9M SCORES
18	6M–7.9M SCORES
19	8M–9.9M SCORES
20	10M–12.4M SCORES
21	12.5M–14.9M SCORES
22	15M–17.4M SCORES
23	17.5M–19.9M SCORES
24	20M–22.4M SCORES
25	22.5M–24.9M SCORES
26	25M–34.9M SCORES
27	35M–49.9M SCORES
28	50M–74.9M SCORES
29	75M–99.9M SCORES
30	100M–149.9M SCORES
31	150M+ SCORES
32	AVERAGE SCORES
33	SERVICE CREDITS
34	BALL SEARCH STARTED
35	LOST BALL FEEDS
36	LOST BALL GAME STARTS
37	LEFT DRAINS
38	CENTER DRAINS
39	RIGHT DRAINS
40	TILTS
41	TOTAL BALLS SAVED
42	PROPRIETARY
43	PROPRIETARY
44	PROPRIETARY
45	PROPRIETARY
46	PROPRIETARY
47	PROPRIETARY
48	PROPRIETARY
49	PROPRIETARY
50	BASE REPLAY
51	LEFT FLIPPER USED
52	RIGHT FLIPPER USED
53	PROPRIETARY
54	PROPRIETARY
55	0–1 MINUTE GAMES
56	1 – 1.5 MINUTE GAMES
57	1.5 – 2 MINUTE GAMES
58	2 – 2.5 MINUTE GAMES
59	2.5 – 3 MINUTE GAMES
60	3 – 3.5 MINUTE GAMES
61	3.5 – 4 MINUTE GAMES
62	4 – 5 MINUTE GAMES
63	5 – 6 MINUTE GAMES
64	6 – 8 MINUTE GAMES
65	8 – 10 MINUTE GAMES
66	10 – 15 MINUTE GAMES
67	15+ MINUTE GAMES
68	RECENT REPLAY PERCENT

Note: *Audits are subject to change (with or without notice).*

Comments:

FEATURE AUDIT TABLE

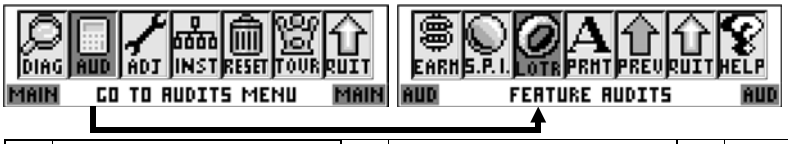

FEATURE AUDITS
01-154 ✍ = ✎
***** PROGRAMMING USE ONLY *****

UNLABELED BOXES ARE FOR FUTURE EXPANSION.

01	LEFT VUK	40	DWARF RINGS COMPLETD	79	FOTR MB 2+ STARTED	118	DESTROY RING STARTED
02	LEFT VUK DIRECT HIT	41	ELF RINGS COMPLETED	80	FOTR MB WON	119	DESTROY RING WON
03	LEFT ORBIT	42	RING MANIA STARTED	81	TROLL HITS	120	GIFT OF THE ELVES LT
04	LEFT RAMP	43	RING MANIA 2+ STARTED	82	TROLL KILLS	121	GIFT EXTRA BALL
05	CENTER LOOP	44	MANIA RINGS COLLECTD	83	BALROG HITS	122	GIFT RING MB
06	SPINS	45	MANIA SHOTS COMPLETD	84	BRIDGE CROSSES	123	GIFT BIG POINTS
07	RING	46	MANIA 1X JACKPOT	85	BALROG KILLS	124	GIFT SPECIAL
08	RIGHT VUK	47	MANIA 2X JACKPOT	86	SWORD LOCKS LIT	125	GIFT 2X SCORING
09	RT VUK BEHIND	48	MANIA 3X JACKPOT	87	SWORD LOCK 1	126	GIFT SUPER MANIA
10	RIGHT RAMP	49	MANIA 4X JACKPOT	88	SWORD LOCK 2	127	GIFT WIZARD MODE
11	RINGWRAITH	50	MANIA 5X JACKPOT	89	TTT MB STARTED	128	PALANTIR LIT
12	RIGHT ORBIT	51	MANIA EXTRA BALL LIT	90	TTT MB 2+ STARTED	129	PALANTIR COLLECTED
13	SPOT RING TARGET	52	RING MODE LIT	91	TTT 1X JACKPOT	130	RING MB RING SHOTS
14	ORTHANC ARRIVALS	53	ESCAPE MODE STARTED	92	TTT 2X JACKPOT	131	RING MB S. JACKPOTS
15	BARAD-DûR ARRIVALS	54	ESCAPE MODE WON	93	TTT 3X JACKPOT	132	RING MB 2.5M
16	ORC LANES	55	BATTLE MODE STARTED	94	TTT 4X JACKPOT	133	RING MB LIGHT E. BALL
17	POP HITS	56	BATTLE MODE WON	95	TTT 5X JACKPOT	134	RING MB 5M
18	LEFT OUTLANE	57	WARG MODE STARTED	96	TTT 6X JACKPOT	135	RING MB LITE SPECIAL
19	LEFT INLANE	58	WARG MODE WON	97	TTT 7X JACKPOT	136	RING MB 7.5M
20	RIGHT INLANE	59	ENT MODE STARTED	98	TTT STAGES SURVIVED	137	SRMMB RING SHOTS
21	RIGHT OUTLANE	60	ENT MODE WON	99	TTT S. JACKPOT LIT	138	SRMMB SHOTS COMPLETE
22	LANE S. S. PICKED	61	SHELOB MODE STARTED	100	TTT SJP COLLECTED	139	SRMMB JACKPOTS
23	TOWER S. S. PICKED	62	SHELOB MODE WON	101	TTT MB WON	140	SRMMB TOTAL JACKPT X
24	FLIPPER S. S. PICKED	63	WITCHKING MODE STRTD	102	PATH ADVANCED	141	SRMMB SUPER JACKPOTS
25	LANE SKILL SHOT MADE	64	WITCHKING MODE WON	103	PATH ACCESSED	142	VALINOR STARTED
26	LANE S. S. MADE	65	BOOK MODE LIT	104	PATH TIME SOULS	143	BALROG STARTED
27	TOWER S. S. MADE	66	MOOK MODE STARTED	105	PATH UNLIT SOULS	144	BALROG HITS
28	FLIPPER S. S. MADE	67	BOOK MODE JACKPOTS	106	PATH LIT SOULS	145	CAVE SHOTS
29	ORC COMPLETED	68	BOOK MODE WON	107	PATH BLINKING SOULS	146	CAVE BALROG
30	HUMAN RINGS COLLECTD	69	MYSTERY LIT	108	SOULS COMPLETED	147	CAVE SUPER SPINNER
31	DWARF RINGS COLLECTD	70	MYSTERY COLLECTED	109	ROTK MB STARTED	148	CAVE SUPER POPS
32	ELF RINGS COLLECTED	71	MYSTERY E. B. LIT	110	ROTK MB 2+ STARTED	149	CAVE SUPER RAMPS
33	RINGS SPOTTED	72	MYSTERY SPECIAL LIT	111	ROTK JACKPOTS	150	CAVE SUPER LOOPS
34	HUMAN RING BONUS	73	GOLLUM MULTIBALL LIT	112	ROTK LEVELS COMPLETE	151	CAVE SUPER EVERYTHING
35	DWARF RING BONUS	74	GOLLUM MBALL STARTED	113	ROTK MULT INCREASED	152	BARAD-DÛR HOLD RING VALUE
36	ELF RING BONUS	75	GOLLUM MBALL 2+ STRTD	114	ROTK S. JACKPOT LIT	153	BARAD-DÛR LIGHT EXTRA BALL
37	RING COMBOS	76	FELLOWSHIP COLLECTED	115	ROTK SJP COLLECTED	154	BARAD-DÛR POINTS
38	RING COMBO THRSHLDS	77	FELLOWSHIP COMPLETED	116	ROTK MB WON		
39	HUMAN RINGS COMPLETD	78	FOTR MB STARTED	117	DESTROY RING LIT		

MULTI-WEEK TOURNAMENT AUDIT TABLES

STARTING METER Reading :

STARTING METER Date (MM/DD/YR) :

AUDITOR'S NAME :

CURRENT VOLUME SETTING:

CURRENT METER Reading :

AUDIT Date (MM/DD/YR) :

CPU Version :

DISPLAY Version :

GAME LOCATION NAME :

01	TOTAL PLAYS	06	NET EARNINGS	11	ACCUM. JACKPOT
02	TOURNAMENT PLAYS	07	ACCUM. TOTAL PLAYS	12	# TOURNAMENTS
03	TOTAL GAME EARNINGS	08	ACCUM. TOUR. PLAYS		
04	TOTAL TOUR. EARNINGS	09	ACCUM. EARNINGS		
05	JACKPOT	10	ACCUM. TOUR EARNINGS		

STARTING METER Reading :

STARTING METER Date (MM/DD/YR) :

AUDITOR'S NAME :

CURRENT VOLUME SETTING:

CURRENT METER Reading :

AUDIT Date (MM/DD/YR) :

CPU Version :

DISPLAY Version :

GAME LOCATION NAME :

01	TOTAL PLAYS	06	NET EARNINGS	11	ACCUM. JACKPOT
02	TOURNAMENT PLAYS	07	ACCUM. TOTAL PLAYS	12	# TOURNAMENTS
03	TOTAL GAME EARNINGS	08	ACCUM. TOUR. PLAYS		
04	TOTAL TOUR. EARNINGS	09	ACCUM. EARNINGS		
05	JACKPOT	10	ACCUM. TOUR EARNINGS		

STARTING METER Reading :

STARTING METER Date (MM/DD/YR) :

AUDITOR'S NAME :

CURRENT VOLUME SETTING:

CURRENT METER Reading :

AUDIT Date (MM/DD/YR) :

CPU Version :

DISPLAY Version :

GAME LOCATION NAME :

01	TOTAL PLAYS	06	NET EARNINGS	11	ACCUM. JACKPOT
02	TOURNAMENT PLAYS	07	ACCUM. TOTAL PLAYS	12	# TOURNAMENTS
03	TOTAL GAME EARNINGS	08	ACCUM. TOUR. PLAYS		
04	TOTAL TOUR. EARNINGS	09	ACCUM. EARNINGS		
05	JACKPOT	10	ACCUM. TOUR EARNINGS		

STARTING METER Reading :

STARTING METER Date (MM/DD/YR) :

AUDITOR'S NAME :

CURRENT VOLUME SETTING:

CURRENT METER Reading :

AUDIT Date (MM/DD/YR) :

CPU Version :

DISPLAY Version :

GAME LOCATION NAME :

01	TOTAL PLAYS	06	NET EARNINGS	11	ACCUM. JACKPOT
02	TOURNAMENT PLAYS	07	ACCUM. TOTAL PLAYS	12	# TOURNAMENTS
03	TOTAL GAME EARNINGS	08	ACCUM. TOUR. PLAYS		
04	TOTAL TOUR. EARNINGS	09	ACCUM. EARNINGS		
05	JACKPOT	10	ACCUM. TOUR EARNINGS		

MULTI-WEEK TOURNAMENT AUDIT TABLES

STARTING METER Reading :

STARTING METER Date (MM/DD/YR) : 0

AUDITOR'S NAME :

CURRENT VOLUME SETTING:

CURRENT METER Reading :

AUDIT Date (MM/DD/YR) : 0

CPU Version :

DISPLAY Version :

GAME LOCATION NAME :

01	TOTAL PLAYS	06	NET EARNINGS	11	ACCUM. JACKPOT
02	TOURNAMENT PLAYS	07	ACCUM. TOTAL PLAYS	12	# TOURNAMENTS
03	TOTAL GAME EARNINGS	08	ACCUM. TOUR. PLAYS		
04	TOTAL TOUR. EARNINGS	09	ACCUM. EARNINGS		
05	JACKPOT	10	ACCUM. TOUR EARNINGS		

STARTING METER Reading :

STARTING METER Date (MM/DD/YR) : 0

AUDITOR'S NAME :

CURRENT VOLUME SETTING:

CURRENT METER Reading :

AUDIT Date (MM/DD/YR) : 0

CPU Version :

DISPLAY Version :

GAME LOCATION NAME :

01	TOTAL PLAYS	06	NET EARNINGS	11	ACCUM. JACKPOT
02	TOURNAMENT PLAYS	07	ACCUM. TOTAL PLAYS	12	# TOURNAMENTS
03	TOTAL GAME EARNINGS	08	ACCUM. TOUR. PLAYS		
04	TOTAL TOUR. EARNINGS	09	ACCUM. EARNINGS		
05	JACKPOT	10	ACCUM. TOUR EARNINGS		

STARTING METER Reading :

STARTING METER Date (MM/DD/YR) : 0

AUDITOR'S NAME :

CURRENT VOLUME SETTING:

CURRENT METER Reading :

AUDIT Date (MM/DD/YR) : 0

CPU Version :

DISPLAY Version :

GAME LOCATION NAME :

01	TOTAL PLAYS	06	NET EARNINGS	11	ACCUM. JACKPOT
02	TOURNAMENT PLAYS	07	ACCUM. TOTAL PLAYS	12	# TOURNAMENTS
03	TOTAL GAME EARNINGS	08	ACCUM. TOUR. PLAYS		
04	TOTAL TOUR. EARNINGS	09	ACCUM. EARNINGS		
05	JACKPOT	10	ACCUM. TOUR EARNINGS		

STARTING METER Reading :

STARTING METER Date (MM/DD/YR) : 0

AUDITOR'S NAME :

CURRENT VOLUME SETTING:

CURRENT METER Reading :

AUDIT Date (MM/DD/YR) : 0

CPU Version :

DISPLAY Version :

GAME LOCATION NAME :

01	TOTAL PLAYS	06	NET EARNINGS	11	ACCUM. JACKPOT
02	TOURNAMENT PLAYS	07	ACCUM. TOTAL PLAYS	12	# TOURNAMENTS
03	TOTAL GAME EARNINGS	08	ACCUM. TOUR. PLAYS		
04	TOTAL TOUR. EARNINGS	09	ACCUM. EARNINGS		
05	JACKPOT	10	ACCUM. TOUR EARNINGS		

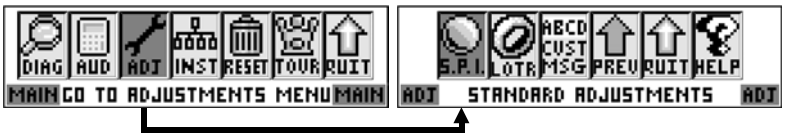

STANDARD & FEATURE ADJUSTMENT TABLES

(Review Overview regarding changes)

STANDARD ADJUSTMENTS 01-55 ✍ = ✎

Nr.	ADJUSTMENT NAME	USA DEFAULT	YOUR SETTING
01	REPLAY TYPE	AUTO	
02*	REPLAY PERCENTAGE	10%	
03	REPLAY AWARD	CREDIT	
04*	REPLAY LEVELS	1: 20,000,000	
05	REPLAY BOOST	YES	
06	SPECIAL AWARD	CREDIT	
07*	SPECIAL PERCENTAGE	2%	
08	FREE GAME LIMIT	05	
09*	EXTRA BALL LIMIT	09	
10*	EXTRA BALL PERCENTAGE	25%	
11	GAME PRICING	USA 5	
12	MATCH AWARD	CREDIT	
13*	MATCH PERCENTAGE	9%	
14	BALLS PER GAME	03	
15	TILT WARNINGS	01	
16	CREDIT LIMIT	30	
17	ALLOW HIGH SCORES	YES	
18	GRAND CHAMPION AWARDS	01	
19	HIGH SCORE #1 AWARDS	01	
20	HIGH SCORE #2 AWARDS	00	
21	HIGH SCORE #3 AWARDS	00	
22	HIGH SCORE #4 AWARDS	00	
23*	GRAND CHAMPION SCORE	75,000,000	
24*	DEFAULT HIGH SCORE #1	60,000,000	
25*	DEFAULT HIGH SCORE #2	50,000,000	
26*	DEFAULT HIGH SCORE #3	45,000,000	
27*	DEFAULT HIGH SCORE #4	40,000,000	
28	HSTD RESET COUNT	2,000	

Nr.	ADJUSTMENT NAME	USA DEFAULT	YOUR SETTING
29	HIGH SCORE INITIALS	3 INITIALS	
30	FREE PLAY	NO	
31	CUSTOM MESSAGE	ON	
32	FLASH LAMP POWER	NORMAL	
33	COIL PULSE POWER	NORMAL	
34	KNOCKER VOLUME	NORMAL	
35	GAME RESTART	YES	
36	BILL VALIDATOR	NO	
37	BKGRND MUSIC VOLUME	01	
38*	FREEZE TIME	OFF	
39	UK POST SAVE ENABLED	NO	
40	TIMED PLUNGER	OFF	
41	FLIPPER BALL LAUNCH	DISABLED	
42	COINDOOR BALL SAVER	NO	
43	COMPETITION MODE	NO	
44	CONSOLATION BALL	YES	
45	FAST BOOT	YES	
46	Q24 OPTION	COIN METER	
47	TICKET DISP. INSTALLED	NO	
48	ALLOW PLAYER COMP. MODE	YES	
49	TECH ALERT WARNING	NEVER	
50	TEAM SCORES	NO	
51	LOCATION ID	00	
52	GAME ID	00	
53	FLIPPER ADJ 1	10	
54	FLIPPER ADJ 2	50	
55	FLIPPER ADJ 3	3	

**** Defaults are subject to change during production (especially 02, 04, 07, 09, 10, 13, 23-27 & 38).***

Note: *If **Game & Display ROMs** other than USA are installed, along with the proper Dip Switch Settings, different Defaults will appear. If changes are made (or your Defaults are not USA), enter them with pencil in the **YOUR SETTING** spaces provided for reference.*

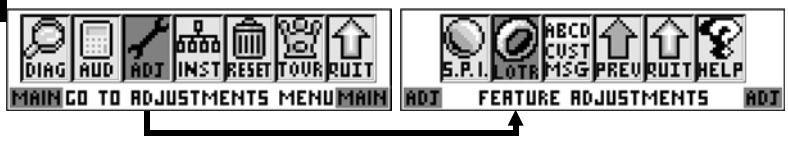

Shortcut to Standard Adjustment 31.

FEATURE ADJUSTMENTS 01-35 ✍ = ✎

Nr.	ADJUSTMENT NAME	USA DEFAULT	YOUR SETTING
01	NUM. RING COMBOS-LEVEL	10	
02	TWO TOWERS MBALL DIFF	MODERATE	
03	1ST HARD TTT MB	1	
04	TTT LOCK DIFFICULTY	EX. EASY	
05	PALANTIR DIFFICULTY	EASY	
06	FELLOWSHIP DIFFICULTY	EASY	
07	RING MULTIBALL DIFF	MODERATE	
08	RING MBALL E. BALL MEM	NO	
09	RING MBALL SPECIAL MEM	NO	
10	ELF GIFT E. BALL MEM	YES	
11	ELF GIFT SPECIAL MEM	YES	
12	RING FRENZY E. BALL DIFF	MODERATE	
13	RING FRENZY E. BALL MEM	NO	
14	RING MODE DIFFICULTY	EASY	
15	PATHS OF THE DEAD DIFF	MODERATE	
16	MYSTERY DIFFICULTY	HARD	
17	MYSTERY EB MEM	NO	

Nr.	ADJUSTMENT NAME	USA DEFAULT	YOUR SETTING
18	MYSTERY SPECIAL MEM	NO	
19	SPOT RING DIFF.	EASY	
20	ELF RING SPOTTING	MODERATE	
21	DWARF RING SPOTTING	EASY	
22	HUMAN RING SPOTTING	MODERATE	
23	FELLOWSHIP MBALL DIFF	MODERATE	
24	ROTK MBALL DIFF	MODERATE	
25	CONSOLATION MYSTERY	YES	
26	ALLOW VOLUME EFFECTS	YES	
27	GAME START BALROG ROAR	YES	
28	BARAD-DÛR DIFFICULTY	MODERATE	
29	BARAD-DÛR E. B. MEMORY	YES	
30	SPOT FELLOWSHIP MBRS.	YES	
31	GOLLUM'S CAVE DIFF.	MODERATE	
32	EARLY BARAD-DÛR CRASH	YES	
33	CAVE TROLL SEQUENCE	OFF	
34	CONSOLATION BALROG	BOTH	
35	DESTROY RING # BALLS	1	

back to Page 38

Go To Adjustments Menu

Overview

The **Portals™ Service Menu System** provides **90** Adjustments to vary Game Functions to customize for your particular needs. The Adjustments are divided into 2 groups: • **Standard Adjustments** (**01-55**) and • **Feature Adjustments** (**01-35**). Game code may get upgraded during production; compare all Adjustments in the display with the manual and make any corrections to the Adjustment Table *(previous page)*, as necessary. Adjustments are subject to change *(with or without notice)*. To view Adjustments in the display, enter the **Portals™ Service Menu System**. When a change is made and then the next / previous Adjustment is selected *(or the Sub-Menu is exited)*, the display will momentarily flash **REQUEST INSTALLED**. *For **further customization** of **Game Play Difficulty** or **Game Play Type** or how to **RESET ONLY** the **Adjustments**, see Section **3**, Chapter **5**, **GO TO INSTALLS MENU**.*

***Important:** The **Coin Door** must be **OPEN** allowing the **Memory Protect Switch** to be disabled, so any Adjustment changes can be made.*

EXPLANATION & USAGE OF COMMON LARGE & MINI-ICONS USED IN VARIOUS MENUS & SUB-MENUS:

These ***non-selectable Icons*** appear in the *selected Menu* only when there are **MORE** Icons to the **LEFT** or to the **RIGHT** available for selection.

Select and activate to return to the **PREVIOUS** Menu.

Select and activate to **QUIT**, *exits & returns to the* ***Attract Mode***.

Select and activate to view **HELP** *Screens of the current Menu*.*

Select and activate to:

Move **LEFT** or **RIGHT**, *select previous / next or move backwards / forwards.*

DECREMENT (-) or **INCREMENT (+)** *displayed value or select previous / next.*

**** Help Note: An explanation of each Mini-Icon at that menu level will cycle continuously. To exit a display where no Mini-Icons are available for selection, pressing any button will exit the display.***

GO TO ADJUSTMENTS MENU

After entering **Portals™**, the **MAIN MENU** now appears. Select the "ADJ" *Icon* in the **MAIN MENU** with either the **Red "LEFT"** or **Green "RIGHT" Buttons** (the **Flipper Buttons** operates in the same manner) and press the **Black "ENTER" Button** (the **Start Button** operates in the same manner). The **ADJUSTMENTS MENU** appears. Continue through this chapter for the explanation & usage of the *Icons* in the **ADJUSTMENTS MENU**.

Standard Adjustments (01-55)

To initiate, from the **ADJUSTMENTS MENU**, select the "S.P.I." *Icon* with either the **Red "LEFT"** or **Green "RIGHT" Buttons** and press the **Black "ENTER" Button**. Select and *activate* either of the ">>" *Mini-Icons* to view the next or previous Adjustment in this group. Select and *activate* either of the "-" or "+" *Mini-Icons* to change the setting, if desired *(the Default Setting is noted in the definitions below)*. The display will describe the **Adjustment Number**, **Adjustment Name** and the **Current Adjustment Setting**. The current Adjustment will remain in the display until the next Adjustment is view or when this Menu is exited.

WARNING: Changes made in any Adjustments will be lost after a FACTORY RESET or removal of the CPU/Sound Board Batteries.

Nr.	STANDARD ADJUSTMENT NAME: Definition
	REPLAY TYPE: Set to **AUTO**, **DYNAMIC**, **FIXED** or **NONE**. Default is **AUTO**. Selecting **NONE** will make Standard Adjustments **2-5** ***NOT AVAILABLE***. Selecting **FIXED** will make Standard Adjustment **2** ***NOT AVAILABLE***. If selected **AUTO**, **DYNAMIC** or **FIXED**, you will need to then select the number of Replay Levels and Score Threshold *(in Standard Adj. **4**)* desired for the player to receive a Replay Award *(select type in Standard Adj. **3**)*. The Default Score appears as a starting point after the Level amount is selected. **AUTO** & **DYNAMIC** will then get based on the Replay Percentage *(in Standard Adjustment **2**)*.
01	• Select **FIXED** to give the player a Replay Award as the Score Threshold is reached. This Score Threshold ***will not*** adjust up or down. • Select **AUTO** to give the player a Replay Award as the Score Threshold is reached. This Score Threshold ***will automatically*** adjust up or down based on the Replay Percentage chosen *(in Std. Adj. **2**)*. The game periodically adjusts based upon the Player Base Skill Level. • Select **DYNAMIC** to give the player a Replay Award as the Score Threshold is reached. This Score Threshold will go down every game based on the Replay Percentage selected. *For (Dynamic) example, if the Score Threshold is 50,000,00 and the Replay Percentage selected is 10%, every game a player does not reach the Score Threshold, the score to reach will drop by 5,000,000 (10% of 50M). This will continue every game until the Threshold Score is reached. Thus, if the score then drops to 15,000,000 after 7 games and is then achieved, the Replay Award is given. The original Score Threshold is added to 15,000,000 and is now 65,000,000. It will then take the same player 10 games to reach 15,000,000.*
02	**REPLAY PERCENTAGE:** Set between **01% - 50**. Default is **10%**. This Adjustment is required if Standard Adjustment **1** is set to **AUTO** or **DYNAMIC**.

Standard Adjustments 03-11 continued on the next page.

STANDARD ADJUSTMENT NAME: Definition

03 **REPLAY AWARD:** Set to **EXTRA BALL**, **CREDIT**, **TICKET*** or **TOKEN***. Default is **CREDIT**. Select **EXTRA BALL** if awarding a ***CREDIT***, ***TICKET/TOKEN*** is prohibited in your area.

***TICKET or TOKEN is selected, the game will require an optional Ticket or Token Dispenser**
If selected Token, then Standard Ajustment 46, Q24 Option, must be changed accordingly.

04 **REPLAY LEVELS:** Set between **1 - 4** for the number of Replay Levels to be active. Default is **1**. A "Drop-Down" Table appears showing Replay Level 1. Adjust the Replay Level between 10M - 9.99B *(Default Score appears as a starting point)* using the "-" or "+" *Mini-Icons*, then use the *">>" Mini-Icon* to go to next Level *(if selected more than 1)* and select the next highest Threshold Score(s) desired.

05 **REPLAY BOOST:** Set to **YES** or **NO**. Default is **YES**. *This Adjustment works only when Standard Adjustment **1**, **Replay Type**, is set to **FIXED** or **AUTO**.*
When set to **YES**, while **FIXED** or **AUTO** maintains the Replay Levels, Replay Boost works as follows: If the Replay Level is 7,000,000 *(regardless of the Replay Percentage)*, and the Player scores 20M, and receives the Replay Award, the next game the Current Replay Level is added to this base. Thus the next game, the Replay Level is 14,000,000. The Player agains scores 20M. The next game the Player will need to achieve 21,000,00 to earn the Replay Award. If the Player does not achieve 21,000,000, the next game reverts back to the original 7,000,000 or the new adjusted level maintained by the Fixed or Autopercentaging Feature.

06 **SPECIAL AWARD:** Set to **EXTRA BALL**, **CREDIT**, **TICKET***, **TOKEN*** or **POINTS**. Default is **CREDIT**. Select **EXTRA BALL** or **POINTS** if awarding a ***CREDIT*** or ***TICKET/TOKEN*** is prohibited in your area.

07 **SPECIAL PERCENTAGE:** Set between **1% - 5%**. Default is **2%**. This adjustment allows the operator to adjust how frequently the ***Special Feature*** is made available to the player.

08 **FREE GAME LIMIT:** Set between **01 - 09**, **NO FREE GAMES** or **UNLIMITED**. Default is **05**. Set the maximum number of *Free Games* that may be accumulated per game.

09 **EXTRA BALL LIMIT:** Set between **01 - 09**, **NO EXTRA BALLS** or **UNLIMITED**. Default is **09**. Set the number of *Extra Balls* that may be accumulated per game.

10 **EXTRA BALL PERCENTAGE:** Set between **01% - 50%**. Default is **25%**. This adjustment allows the operator to adjust how frequently the ***Extra Ball Feature*** is made available to the player.

11 **GAME PRICING:** There are two (2) methods available for *Coin Switch Programming*: **Standard** & **Custom**. Set between **USA 1** thru **EURO 12** or **CUSTOM**. *USA Factory Default Setting* is **USA 5**.

The **Dip Switch Settings (Sw. 300)** on the **CPU/Sound Board** for each Country ***must match*** *with what is shown in the **USA & Int'l. Standard Pricing Select Tables** for your country to have correct operation (see the next page).* For a **Standard** Selection *(**USA** or **International**):* Select & *activate* either of the "-" or "+" *Mini-Icons* to move backward or forward in the Display; With your choice appearing in the display, select & *activate* the ">>" *Mini-Icon* to advance and "lock-in" the change *(display will momentarily flash **REQUEST INSTALLED**).*

If **CUSTOM** is selected *(appears in display)*, after selecting & *activating* any *Mini-Icon (except for "-" or "+")*, the display will momentarily flash **REQUEST INSTALLED** with the display "**LEFT COIN: 0 PULSE**" appearing. Use the "<<" or ">>" *Mini-Icons* to ***select*** the next choice *(see Table Examples below)* and the "-" or "+" *Mini-Icons* to ***customize*** the PULSES, CREDITS & CLICKS from **0** to **99**.

The prescribed number of **PULSES** required for **1 CREDIT** must be set according to the ***Pricing Scheme*** *desired*. Some simple calculations are required to get the proper set-up. After customizing, ***test*** *the set-up* with appropriate Coins or Bills and adjust, if necessary. ***Note:*** *Clicks can be changed if an optional Coin Meter is installed.*

LEFT	CENTER	RIGHT	4TH	Example 1			LEFT COIN:	CENTER COIN:	RIGHT COIN:	FOURTH COIN:	ONE CREDIT:	BONUS 1:	BONUS 2:	BONUS 1:	BONUS 2:	LEFT COIN:	CENTER COIN:	RIGHT COIN:	FOURTH COIN:
25¢	$1.00	25¢	Not Used	1 /50¢	2 /75¢	3/ $1.00	**3**	**12**	**3**	1	**4**	0	0	0	0	1	4	1	1
Coin Mechanisms Used				**Pricing Scheme Desired**			PULSES	PULSES	PULSES	PULSE	PULSES	PULSES	PULSES	CREDITS	CREDITS	CLICK	CLICKS	CLICK	CLICK

In **Example 1**, note the **LEFT** (and **RIGHT**) **COIN: 3 PULSES** and **ONE CREDIT: 4 PULSES**. Since every Coin inserted produces 3 Pulses & every Credit requires 4 Pulses, 2 Coins (50¢) will produce 6 Pulses (*4 Pulses for the 1st Credit + 2 Pulses remains in escrow).* The 3rd Coin (75¢) provides another 3 Pulses for a total of 5 Pulses *(4 Pulses for the 2nd Credit + 1 Pulse remains in es crow).* The 4th Coin ($1.00) provides another 3 Pulses for a total of 4 Pulses (*4 Pulses for the 3rd Credit + 0 Pulses remain).* The **CENTER COIN: 12 PULSES** is set this way *(with a Bill Validator attached);* every $1-Bill inserted produces 12 Pulses or 3 Credits.

LEFT	CENTER	RIGHT	4TH	Example 2			LEFT COIN:	CENTER COIN:	RIGHT COIN:	FOURTH COIN:	ONE CREDIT:	BONUS 1:	BONUS 2:	BONUS 1:	BONUS 2:	LEFT COIN:	CENTER COIN:	RIGHT COIN:	FOURTH COIN:
25¢	$1.00	25¢	Not Used	1 /50¢	2 /75¢	7/ $2.00	3	12	3	1	4	**24**	0	**1**	0	1	4	1	1
Coin Mechanisms Used				**Pricing Scheme Desired**			PULSES	PULSES	PULSES	PULSE	PULSES	PULSES	PULSES	CREDIT	CREDITS	CLICK	CLICKS	CLICK	CLICK

In **Example 2**, *similar to Example 1*, however, **BONUS CREDITS** are implemented. In addition to receiving 3 plays for every $1.00, the player is awarded an extra Credit for every 2nd dollar inserted before game start.

LEFT	CENTER	RIGHT	4TH	Example 3			LEFT COIN:	CENTER COIN:	RIGHT COIN:	FOURTH COIN:	ONE CREDIT:	BONUS 1:	BONUS 2:	BONUS 1:	BONUS 2:	LEFT COIN:	CENTER COIN:	RIGHT COIN:	FOURTH COIN:
25¢	$1.00	25¢	Not Used	1 /25¢	6/ $1.00	13/ $2.00	5	20	5	0	4	20	**40**	**1**	0	1	4	1	1
Coin Mechanisms Used				**Pricing Scheme Desired**			PULSES	PULSES	PULSES	PULSES	PULSES	PULSES	PULSES	CREDIT	CREDITS	CLICK	CLICKS	CLICK	CLICK

In **Example 3**, a ***Pricing Scheme*** for a cheaper game is shown. An extra Pulse is put in escrow for every 25¢, thus at 4X 25¢ inserted, another Credit is given, and the **BONUS 1: 20 PULSES** threshold is also met, so 6/ $1.00 is achieved. **BONUS 2: 40 PULSES** is set, so when this threshold is met with $2.00, 13 Credits are produced.

LEFT	CENTER	RIGHT	4TH	Example 4			LEFT COIN:	CENTER COIN:	RIGHT COIN:	FOURTH COIN:	ONE CREDIT:	BONUS 1:	BONUS 2:	BONUS 1:	BONUS 2:	LEFT COIN:	CENTER COIN:	RIGHT COIN:	FOURTH COIN:
10p	50p	£1	20p	1 /30p	2 /50p	5 /£1	**1**	**6**	**15**	**2**	**3**	0	0	0	0	1	4	1	1
Coin Mechanisms Used				**Pricing Scheme Desired**			PULSE	PULSES	PULSES	PULSES	PULSES	PULSES	PULSES	CREDITS	CREDITS	CLICK	CLICKS	CLICK	CLICK

In **Example 4**, a ***Pricing Scheme*** using a different currency *(i.e. British Sterling)* is shown to provide another way coins *(or tokens)* can be utilized to custom tailor to your own needs.

Standard Adjustment 11, Custom Pricing, continued on the next page.

STANDARD ADJUSTMENT NAME: Definition

USA & International Standard Pricing Select Tables

CPU/SOUND BOARD DIP SWITCH 300 SETTING (Pos. 1 2 3 4 5 6 7 8)	COUNTRY SETTING OPTION(S)	COIN MECHANISMS (SWITCHES) COINS THRU ... SLOT: LEFT	CENTER	RIGHT	4TH	PRICING SCHEME Number of Plays (Credits) for Price Amount Shown See "Appendix J" for Coin Cards Examples & Info!			Requires SPI Coin Card(s) Part Number
ON / OFF	USA 1	$.25	$1.00	$.25		1 /$.25			755-5400-01
▼▼▼▼▼▼▼▼	USA 2					1 /$.50	2 /$.75	3 /$1.00	755-5400-02
	USA 3					1 /$.50			755-5400-02
	USA 4					1 /$.50	*For USA Defaults 6 & 7 use:*		755-5400-02
	USA 5 »					1 /$.50	5 /$2.00	**755-5400-02**	755-5400-00
	USA 6					1 /$.50	2 /'4 X 25¢'	3 /$1.00 Bill	◀ Used to promote the Bill Validator.
	USA 7					1 /$.50	4 /$1.50	6 /$2.00	
	USA 8					1 /$.50	3 /$1.00		755-5400-00
Pos. 1 2 3 4 5 6 7 8	For different Euro Pricing Scheme (other than below default), go to Adjustment 06 and scroll through Euro 1-12 for new setting (see end of table Euro 1-12).								
ON ▲ / OFF ▼▼▼▼▼▼▼	Austria **Euro 9**	€.50	€1.00	€2.00		1 /€1.00	2 /€1.50	3 /€2.00	755-5401-09
Pos. 1 2 3 4 5 6 7 8									
ON ▲▲▲ / OFF ▼▼▼▼▼	**Australia 1** «	20¢	$A1	$A2		1 /$A1	3 /$A2		755-5406-00
	Australia 2					1 /$A1			(Side 1)
Pos. 1 2 3 4 5 6 7 8	For different Euro Pricing Scheme (other than below default), go to Adjustment 06 and scroll through Euro 1-12 for new setting (see end of table Euro 1-12).								
ON ▲ / OFF ▼▼▼▼▼▼▼	Belgium **Euro 1**	€.50	€1.00	€2.00		1 /€.50			755-5401-01
Pos. 1 2 3 4 5 6 7 8									
ON ▲▲ / OFF ▼▼▼▼▼▼	**Canada**	Can$.25	Can$.25	Can$1	Can$2	1 /50¢	2 /75¢	3/ Can$1	755-5400-00 *or -01 or -02*
Pos. 1 2 3 4 5 6 7 8									
ON ▲▲ / OFF ▼▼▼▼▼▼	**Denmark 1** «	1 DKr	5 DKr	10 DKr	20 DKr	1 /3 DKr	2 /5 DKr		755-5402-00
	Denmark 2					1 /2 DKr	3 /5 DKr	7 /10 DKr	(2-Sided)
Pos. 1 2 3 4 5 6 7 8	For different Euro Pricing Scheme (other than below default), go to Adjustment 06 and scroll through Euro 1-12 for new setting (see end of table Euro 1-12).								
ON ▲▲ / OFF ▼▼▼▼▼▼	Finland **Euro 8**	€.50	€1.00	€2.00		1 /€1.00	3 /€2.00		755-5401-08
Pos. 1 2 3 4 5 6 7 8	For different Euro Pricing Scheme (other than below default), go to Adjustment 06 and scroll through Euro 1-12 for new setting (see end of table Euro 1-12).								
ON ▲▲ / OFF ▼▼▼▼▼▼	France **Euro 10**	0,50 €	1,00 €	2,00 €		1 /1,00 €	3 /2,00 €	7 /3,00 €	755-5401-10
Pos. 1 2 3 4 5 6 7 8	*Germany: For different Euro Pricing Scheme (other than below settings), go to Adjustment 06 and scroll to Custom for this Unique Coin Door & Mech.*								
ON ▲▲▲ / OFF ▼▼▼▼▼	Germany 1					1 /0,50¢			755-5401-01
	Germany 2 «	€0,50	€1,00	€2,00		1 /0,50¢	5 /€2,00		755-5401-02
	Germany 3					1 /0,50¢	6 /€2,00		755-5401-04
Pos. 1 2 3 4 5 6 7 8	For different Euro Pricing Scheme (other than below default), go to Adjustment 06 and scroll through Euro 1-12 for new setting (see end of table Euro 1-12).								
ON ▲▲▲▲ / OFF ▼▼▼▼	Greece **Euro 6**	€.50	€1.00	€2.00		2 /€.50			755-5401-06
Pos. 1 2 3 4 5 6 7 8	*Italy: For different Euro Pricing Scheme (other than below settings), go to Adjustment 06 and scroll to Custom for this Unique Coin Door & Mech.*								
ON ▲ / OFF ▼▼▼▼▼▼▼	**Italy 1** «	€.50		€.50		1 /.50¢			755-5401-01 &
	Italy 2					1 /€1.00	3 /€2.00		755-5401-08
Pos. 1 2 3 4 5 6 7 8	For different Euro Pricing Scheme (other than below default), go to Adjustment 06 and scroll through Euro 1-12 for new setting (see end of table Euro 1-12).								
ON ▲ / OFF ▼▼▼▼▼▼▼	Netherlands **Euro 3**	€.50	€1.00	€2.00		1 /€.50	3 /€1.00		755-5401-03
Pos. 1 2 3 4 5 6 7 8									
ON ▲ / OFF ▼▼▼▼▼▼▼	**New Zealand 1** «	$NZ1		$NZ2		1 /$NZ1			755-5406-00
	New Zealand 2					1 /$NZ1	3 /$NZ2		(Side 2)
Pos. 1 2 3 4 5 6 7 8									
ON ▲ / OFF ▼▼▼▼▼▼▼	**Norway 1** «	10 NKr	5 NKr	20 NKr		1 /5 NKr			755-5403-00
	Norway 2					1 /10 NKr	3 /20 NKr		(2-Sided)
Pos. 1 2 3 4 5 6 7 8	*Portugal: For different Euro Pricing Scheme (other than below settings), go to Adjustment 06 and scroll to Custom for this Unique Coin Door & Mech.*								
ON ▲ / OFF ▼▼▼▼▼▼▼	**Portugal**	€.50		€.50		1 /€.50			755-5401-01
Pos. 1 2 3 4 5 6 7 8	For different Euro Pricing Scheme (other than below default), go to Adjustment 06 and scroll through Euro 1-12 for new setting (see end of table Euro 1-12).								
ON ▲ / OFF ▼▼▼▼▼▼▼	Spain **Euro 3**	€.50	€1.00	€2.00		1 /€.50	3 /€1.00		755-5401-03
Pos. 1 2 3 4 5 6 7 8									
ON ▲▲▲ / OFF ▼▼▼▼▼	**Sweden 1** «	1 SKr	5 SKr	10 SKr		1 /10 SKr	2 /15 SKr	3 /20 SKr	755-5404-00
	Sweden 2					1 /5 SKr			(2-Sided)
Pos. 1 2 3 4 5 6 7 8									
ON ▲▲ / OFF ▼▼▼▼▼▼	**Switzerland 1** «	1 SwF	2 SwF	5 SwF		1 /1 SwF	6 /5 SwF		755-5405-00
	Switzerland 2					1 /1 SwF	3 /2 SwF	9 /5 SwF	(2-Sided)

Pos. 1 2 3 4 5 6 7 8		LEFT	CENTER	RIGHT	4TH	5TH	UK also utilizes the 5th Coin Slot Switch (not available with Custom Pricing).			
ON ▲▲▲ / OFF ▼▼▼▼▼	UK 1	10p	50p	£1	20p	£2	3 /£1	7 /£2		755-5407-00
	UK 2						4 /£1			755-5407-01*
	UK 3						1 /50p	5 /£2		755-5407-01
	UK 4						1 /30p	4 /£1		755-5407-01*
	UK 5 «						1 /£1	3 /£2		755-5407-00
	UK 6						3 /£2		*use blank side	755-5407-01*

Note: *The Country Setting Option above noted with "«" & "»" denotes the Factory Default Setting (subject to change).*

Std. Adj. 11, Custom Pricing, and Std. Adj. 12-31 continued on the next page.

STANDARD ADJUSTMENT NAME: Definition

Euro Summary Pricing Select Table

Pos.	1	2	3	4	5	6	7	8
ON	S	E	E	A	B	O	V	E
OFF	S	E	T	T	I	N	G	S

Euro 1-12 are alternate settings for countries using the Euro:

If choosing an alternate Euro Setting other than your Country's Default, please remember to use your Country Dip Switch Setting.

Alternate Settings	LEFT	CENTER	RIGHT	4TH				
Euro 1	€.50	€1.00	€2.00	optional €.20 optional	1 /€.50			755-5401-01
Euro 2					1 /€.50	5 /€2.00		755-5401-02
Euro 3					1 /€.50	3 /€1.00		755-5401-03
Euro 4					1 /€.50	6 /€2.00		755-5401-04
Euro 5					1 /€.50	3 /€1.00	7 /€2.00	755-5401-05
Euro 6					2 /€.50			755-5401-06
Euro 7					1 /€1.00	5 /€4.00		755-5401-07
Euro 8					1 /€1.00	3 /€2.00		755-5401-08
Euro 9					1 /€1.00	2 /€1.50	3 /€2.00	755-5401-09
Euro 10					1 /€1.00	3 /€2.00	7 /€3.00	755-5401-10
Euro 11					1 /€1.00	4 /€2.00		755-5401-11
Euro 12					2 /€1.00	9 /€4.00		755-5401-12

12 **MATCH AWARD:** Set to **CREDIT**, **TICKET*** or **TOKEN***. Default is **CREDIT**. **read note under Std. Adjustment 3.*

13 **MATCH PERCENTAGE:** Set between **0% - 10%** or **OFF**. Default is **9%**. At **0**% the match display occurs at the end of the game but never awards a Credit. Set to **OFF**, no ***Match Animation Feature*** is shown.

14 **BALLS PER GAME:** Set between **02 - 10**. Default is **03**. Set the number of balls per game.

15 **TILT WARNINGS:** Set to **00**, **01** or **03**. Default is **01**. Set the number of Plumb Bob Tilt Switch closures before the ball in play is tilted.

16 **CREDIT LIMIT:** Set between **04 - 50**. Default is **30**. Set the maximum credits allowed.

17 **ALLOW HIGH SCORES:** Set to **YES** or **NO**. Default is **YES**. When set to **YES** if a player exceeds any 1 of the 4 High Scores, the player may receive an award *(depending on Standard Adjustment **03, Replay Award**)*. Set to **NO** to disable this feature. There are 5 High Scores that will allow the player to enter their initials *(or name) (see Standard Adjustment **29, High Score Initials**)*.

18 **GRAND CHAMPION AWARDS:** Set between **00 - 05**. Default is **01**. Set the number of awards, awarded for exceeding Level 1 *(the highest of the five (5) Levels)*.

19 **HIGH SCORE #1 AWARDS:** Set between **00 - 03**. Default is **01**. Set the number of awards, awarded for exceeding Level 2.

20 **HIGH SCORE #2 AWARDS:** Set between **00 - 02**. Default is **00**. Set the number of awards, awarded for exceeding Level 3.

21 **HIGH SCORE #3 AWARDS:** Set between **00 - 01**. Default is **00**. Set the number of awards, awarded for exceeding Level 4.

22 **HIGH SCORE #4 AWARDS:** Set between **00 - 01**. Default is **00**. Set the number of awards, awarded for exceeding Level 5.

23 **GRAND CHAMPION SCORE:** Set between **1,000,000 - 9,999,000,000** or **00** *(increments of 1M)*. Default is **75,000,000**. Set the desired ***High Score Level*** to which Level 1 may be achieved. A score higher than the default, cannot be reset by Standard Adjustment **28**, **HSTD Reset Count**. *The High Score will revert to the Default Score **ONLY** if a **Factory Reset** is done or the batteries are removed from the CPU/Snd. Bd.*

24 **DEFAULT HIGH SCORE #1:** Set between **1,000,000 - 9,999,000,000** or **00** *(increments of 1M)*. Default is **60,000,000**. Set the desired ***High Score Level*** to which Level 2 may be achieved. *Read Std. Adj. **28**.*

25 **DEFAULT HIGH SCORE #2:** Set between **1,000,000 - 9,999,000,000** or **00** *(increments of 1M)*. Default is **50,000,000**. Set the desired ***High Score Level*** to which Level 3 may be achieved. *Read Std. Adj. **28**.*

26 **DEFAULT HIGH SCORE #3:** Set between **1,000,000 - 9,999,000,000** or **00** *(increments of 1M)*. Default is **45,000,000**. Set the desired ***High Score Level*** to which Level 4 may be achieved. *Read Std. Adj. **28**.*

27 **DEFAULT HIGH SCORE #4:** Set between **1,000,000 - 9,999,000,000** or **00** *(increments of 1M)*. Default is **40,000,000**. Set the desired ***High Score Level*** to which Level 5 may be achieved. *Read Std. Adj. **28**.*

28 **HSTD RESET COUNT:** Set between **100 - 9,900** or **OFF** *(increments of 100)*. Default is **2,000**. **HSTD** *(**H**igh **S**core **T**o **D**ate)*. Set the number of games between "automatic resets of High Score Levels" to "Default Scores" for ***ONLY*** Standard Adj. **24-27, Default High Score #1-#4**.

29 **HIGH SCORE INITIALS:** Set to **3 INITIALS** or **10 LETTER**. Default is **3 INITIALS**. When set to **3 INITIALS**, the player is allowed only 3 initials to input. When set to **10 LETTER NAME**, the player is allowed to enter 10 initials to input.

30 **FREE PLAY:** Set to **YES** or **NO**. Default is **NO**. When set to **YES**, no coins are required for *Game Play.*

31 **CUSTOM MESSAGE:** Set to **ON, CHANGE** or **OFF**. Default is **ON**. When set to **CHANGE**, a new message can be set or the old one can be edited *(select the "+" Mini-Icon to change settings until "CHANGE" appears in the display, then select the ">>" Mini-Icon to access.)*. This adjustment can be accessed in two (2) ways by either selecting the "S.P.I." *Icon* and advancing to this Adjustment, **or** can be directly accessed by selecting the "ABCD CUST MSG" *Icon* in the **ADJUSTMENTS MENU**.

View the Custom Message Shortcut summary (end of this chapter) for how to enter text or symbols.

Standard Adjustments 32-48 continued on the next page.

	STANDARD ADJUSTMENT NAME: Definition
32	**FLASH LAMP POWER:** Set to **NORMAL**, **DIM** or **OFF**. Default is **NORMAL**. When set to **DIM**, the Flash Lamps impulse power is reduced by **25**% and when set to **OFF** the Flash Lamps will not flash.
33	**COIL PULSE POWER:** Set to **NORMAL, HARD** or **SOFT**. Default is **NORMAL**. When set to **HARD**, the coil pulse power is ***increased*** by **12.5**% of the normal pulse rate. When set to **SOFT** the coil pulse power is ***decreased*** by **12.5**% of the normal pulse rate. This adj. is provided to compensate for *Low Line* or *High Line voltage* conditions where the solenoids (coils) appear to *kicking too weak or too hard*. Adjust as required.
34	**KNOCKER VOLUME:** Set to **NORMAL, LOW** or **OFF**. Default is **NORMAL**. When set to **LOW**, the volume is decreased 50%. When set to **OFF**, no sound is heard when the "knocker" is sounded.
35	**GAME RESTART:** Set to **YES** or **NO**. Default is **YES**. When set to **YES**, a new game may be started during any ball after the first ball is completed *(if credits are available).* Pressing the **Start Button** during the first ball will add additional players. When set to **NO**, the game disables the **Start Button** after the first ball until the final ball is in play. *Review Sec. **2**, Chp. **1**, **GAME OPERATIONS & FEATURES**, for details.*
36	**BILL VALIDATOR:** Set to **YES** or **NO**. Default is **NO**. When set to **YES**, in *Game Attract Mode* the Display will show an "*Insert Bill Animation*." When set to **NO,** the Display will show an "*Insert Coin Animation*."
37	**BKGRND (BACKGROUND) MUSIC VOLUME:** Set between **01** - **15**. Default is **01**. After volume is set via Portals Service Buttons *(see Section **3**, Chapter **1**, **PORTALS™ SERVICE MENU INTRODUCTION**)* this adjustment can be utilized to adjust the background music *(1 all the way on, 15 all the way off)* while keeping the Special Sound FX the same level.
38	**FREEZE TIME (BALL SAVE):** Set to **OFF**, **0:01-0:15** or **AUTO**. Default is **OFF**. When set to **OFF** this feature is unavailable. Set between **0:01** through **0:15** *(single increments)* for the ball to be sent back into play if the time set is not met *(per ball).* Set to **AUTO** to automatically adjust the Freeze Timer based on the average ball time.
39	***UK ONLY*** ***Dip Switch Must Be Set*** **UK POST SAVE ENABLED:** Set to **YES** or **NO**. Default is **NO**, *(UK Default is **YES**).* When set to **YES** this feature is available when lit. Set to **NO** to disable this feature. *(UK Games have Outlane/Center Post Save Devices which are accessed in differently; Non-UK Games cannot adjust this setting.)*
40	**TIMED PLUNGER:** Set to **OFF** or **0:15 - 1:00**. Default is **OFF**. When set to **0:15** to **1:00**, the plunger will "Autoplunge" the ball *(at the time set)* when the ball is at the beginning of play, awaiting the skill shot by the player.
41	**FLIPPER BALL LAUNCH:** Set to **DISABLED**, **LEFT FLIPPER**, **RIGHT FLIPPER**, **EITHER FLIPPER** or **BOTH FLIPPERS**. Default is **DISABLED**. This feature allows the player to operate the *Auto Ball Launch* with the **FLIPPER BUTTON(S)** depending on which setting is chosen.
42	**COINDOOR BALL SAVER:** Set to **YES** or **NO**. Default is **NO**. When set to **NO**, this feature is not available. When set to **YES**, this feature allows the **Coin Door** to be opened during game play; the ball will drain but the game will be placed "on hold". When the **Coin Door** is closed, the pinball will return to the Shooter Lane, and the game will resume.
43	**COMPETITION MODE:** Set to **YES** or **NO**. Default is **NO**. When set to **NO**, this feature is not available. If an **Install** of either **$.50** or **Free Play Comp.** was made *(changing default to **YES**)*, and was changed back to **NO**, the **COMPETITION MODE** will be turned **OFF** *(see Sec. **3**, Chp. **5**, **GO TO INSTALLS MENU**, **$. 50** or **Free Play Competition**).* Set to **YES**, this feature is available *(required for Competition Modes)*; this feature will equalize random game features and global score values during multi-player games.
44	**CONSOLATION BALL:** Set to **YES** or **NO**. Default is **YES**. When set to **YES**, the ***EXTRA BALL*** *(Playfield Light Insert, location varies)* will be lit on the last ball in play, if certain programming criteria is met.
45	**FAST BOOT:** Set to **YES** or **NO**. Default is **YES**. When set to **NO** *or if you hold the RIGHT Flipper Button during Power-Up*, this feature is not available and will display all normal Power-Up screens. When set to **YES**, the game will not display the normal informative Power-Up screens, specifically the CPU Version screen and the Location/Game ID screen. Regardless of the setting, normal Power-Up safety checks are still performed.
46	**Q24 OPTION:** Set to **COIN METER**, **TOKEN DISPENSER** or **KNOCKER**. Default is **COIN METER**. This Coil (Solenoid) Location is left "open" at the Factory to allow for these optional Mechanisms to be added to the game. If selecting **TOKEN DISPENSER**, Standard Adjustments 03, 06 & 12 should be changed to **TOKEN**. *Call Technical Support at 1-800-542-5377 if more information is required on this option.*
47	**TICKET DISP. INSTALLED:** Set to **YES** or **NO**. Default is **NO**. *This adjustment is required only for games which have an optional Deltronics (DL-1275-2 PCB Style, SPI Part Nr. 515-7275-00) Ticket Dispenser installed. Unique CPU Sound Bd. Dip Switch (Sw. 300) Setting required, changes the Default to **YES**.*
48	**ALLOW PLAYER COMP. MODE:** Set to **YES** or **NO**. Default is **YES**. ***Competition Mode*** unrandomizes feature events, and standardizes game play and rule sets *(varies from game to game)* for fair competitions. With adequate credit, to enter ***Competition Mode***, hold the **Flipper Button** in while pressing the **Start Button**. ***Watch the Dot Display for more details*** *(rules and operation are subject to change).* General rules are covered in the Instruction Card. Other *Hints and/or Rules* can be made known on this game either visually *(the Dot Display or Flashing Light Inserts)* or can be audible.

Standard Adjustments 49-55 continued on the next page.

Standard Adjustments Continued.

	STANDARD ADJUSTMENT NAME: Definition
49	**TECH ALERT WARNING:** A Portals™ Function. *Review Sec. **3**, Chp. **2**, **GO TO DIAGNOSTICS MENU**, Page **25**, regarding **Technician Alerts** and its' functions.* Set to **NEVER**, **POWERUP**, **COIN DOOR** or **POWERUP AND COIN DOOR**. Default is **NEVER**. When set to **NEVER**, the Tech Report Alert display will not appear upon Power-Up or opening the Coin Door, if the game detects any problems. When set to **POWERUP**, the display will appear only upon Power-Up *(if problems detected).* When set to **COIN DOOR**, the display will appear only when the Coin Door is opened *(if problems detected).* When set to **POWERUP AND COIN DOOR**, the display will appear upon Power-Up and if the Coin Door is opened *(if problems detected).*
50	**TEAM SCORES:** Set to **YES** or **NO**. Default is **NO**. Set to **YES**, then Team Play will be made available. ***Team Play only works in a 4-Player Game.*** The totals for Players 1 / 3 (Team 1) & Players 2 / 4 (Team 2) are then displayed individually ***as well as*** the combined score for **BOTH TEAMS** to enable **Team Play (Doubles)**. *See Section **2**, Chapter **1**, **Game Operation & Features**, for non-adjustable Features.*
51	**LOCATION ID:** Set between **00** to **9999**. Default is **00**. This adjustment allows the operator to assign a location identification number to the audit print-out sheet. *(Will not be affected by Factory Reset.)*
52	**GAME ID:** Set between **00** to **9999**. Default is **00**. This adjustment allows the operator to assign a game identification number to the audit print-out sheet. *(Will not be affected by Factory Reset.)*
53	**FLIPPER ADJ 1:** Set between **05** to **40**. Default is **10**. This adjustment sets the ***minimum*** fire time for a flipper coil in milliseconds.
54	**FLIPPER ADJ 2:** Set between **40** to **60**. Default is **50**. This adjustment sets the ***maximum*** fire time for a flipper coil in milliseconds.
55	**FLIPPER ADJ 3:** Set between **0** to **10**. Default is **3**. This adjustment sets the amount of time to fire the coil ***after the EOS switch is seen*** in milliseconds.

Standard Adjustments 53-55 Note: • Flippers will now fire when the button is pushed until the End-of-Stroke (EOS) Switch closure is seen. When EOS is seen, continue firing for the amount of time in Std. Adj. 55. When this time is expired, if the minimum time has not yet been met (Std. Adj. 53), then keep firing until it has. Otherwise switch to hold power. • If the flipper has been firing and it reaches the maximum (Std. Adj. 54), then switch to hold power. • If the flipper caves-in (EOS re-closes) while the button is still held, then refire the flipper at full power. Switch to hold power as soon as EOS is seen, no minimum times are enforced in this situation. • If the flipper caves in several times on the same single flipper button press, then stop refiring at full power and just stay at hold. • If the flipper fails to open the EOS switch several times, then assume it isn't working and fall back to a "safe" fire time so as not to burn up the coil.

Feature Adjustments (01-35)

To initiate, from the **ADJUSTMENTS MENU**, select the "LOTR" *Icon* with either the **Red "LEFT"** or **Green "RIGHT" Buttons** and press the **Black "ENTER" Button**. Select and *activate* either of the ">>" *Mini-Icon*s to view the next or previous Adjustment in this group. Select and *activate* either of the "-" or "+" *Mini-Icons* to change the setting, if desired *(the Default Setting is noted in the definitions below)*. The display will describe the **Adjustment Number**, **Adjustment Name** and the **Current Adjustment Setting**. The current Adjustment will remain in the display until the next Adjustment is view or when this Menu is exited. ***Game Play, Rules, Settings and Explanation Subject to Change.***

Nr.	FEATURE ADJUSTMENT NAME: Definition
01	**NUMBER RING COMBOS - (PER) LEVEL :** Set between **5 - 15**. Default is **10**. *Note: This adjustment controls how many combos until the difficulty and points increase.*
02	**TWO TOWERS MULTIBALL DIFFICULTY :** Set to **EXEASY, EASY, MODERATE, HARD** or **EXHARD**. Default is **MODERATE**. *Note: This adjustment controls how long we need to survive.*
03	**1ST HARD THE TWO TOWERS MULTIBALL :** Set between **1 - 03**. Default is **1**. *Note: This adjustment determines which Multiball does the player need to light the locks for.*
04	**THE TWO TOWERS LOCK DIFFICULTY :** Set to **EXEASY, EASY, MODERATE, HARD** or **EXHARD**. Default is **EXEASY**. *Note: This adjustment controls how hard it is to light locks.* **EXTRA EASY** = No Locks Lit, 2 KEEP Letters, Lane Memory and Locks Stackable. **EASY** = No Locks Lit, 1 KEEP Letter, Lane Memory and Locks Stackable. **MODERATE** = No Locks Lit, 1 KEEP Letter, Lane Memory and Locks Unstackable. **HARD** = No Locks Lit, 1 KEEP Letter, No Lane Memory and Locks Unstackable. **EXTRA HARD** = No Locks Lit, 1 KEEP Letter, Lanes Toggle and Locks Unstackable.
05	**PALANTIR DIFFICULTY :** Set to **EASY, MODERATE, HARD** or **EXHARD**. Default is **EASY**. *Note: This adjustment controls how often the Palantir is lit.* **EASY** = At Ball Start. **MODERATE** = At Game Start. **HARD** = Never. **EXTRA HARD** = Off at Ball Start.
06	**FELLOWSHIP (OF THE RING) MBALL DIFF. :** Set to **EASY, MODERATE, HARD** or **EXHARD**. Default is **EASY**. *Note: This adjustment controls how many shots for each member.* **EASY** = 1 shot. **MODERATE** = 1 shot (only 1 lit at a time, randomly). **HARD** = 2 shots. **EXTRA HARD** = 2 shots per member in-a-row.

Feature Adjustments 7-25 continued on the next page.

	FEATURE ADJUSTMENT NAME: Definition
07	**RING MULTIBALL DIFFICULTY :** Set to **EASY, MODERATE** or **HARD**. Default is **MODERATE**. Note: This adjustment controls how hard it is to get cool awards.
08	**RING MULTIBALL EXTRA BALL MEMORY :** Set to **YES** or **NO**. Default is **NO**. When set to **YES**, this feature bonus *(Ring MB EB) lit* will be retained in memory from *ball-to-ball* for the same player. When set to **NO**, this feature will go out at the end of each ball.
09	**RING MULTIBALL SPECIAL MEMORY :** Set to **YES** or **NO**. Default is **NO**. When set to **YES**, this feature bonus *(Ring MB Special) lit* will be retained in memory from *ball-to-ball* for the same player. When set to **NO**, this feature will go out at the end of each ball.
10	**ELF GIFT EXTRA BALL MEMORY :** Set to **YES** or **NO**. Default is **YES**. When set to **YES**, this feature bonus *(Elf Gift EB) lit* will be retained in memory from *ball-to-ball* for the same player. When set to **NO**, this feature will go out at the end of each ball.
11	**ELF GIFT SPECIAL MEMORY :** Set to **YES** or **NO**. Default is **YES**. When set to **YES**, this feature bonus *(Elf Gift Special) lit* will be retained in memory from *ball-to-ball* for the same player. When set to **NO**, this feature will go out at the end of each ball.
12	**RING FRENZY EXTRA BALL DIFFICULTY :** Set to **EXEASY, EASY, MODERATE, HARD** or **EXHARD**. Default is **MODERATE**. *Note: This adjustment determines the multiplier needed.*
13	**RING FRENZY EXTRA BALL MEMORY :** Set to **YES** or **NO**. Default is **NO**. When set to **YES**, this feature bonus *(Ring Frenzy EB)) lit* will be retained in memory from *ball-to-ball* for the same player. When set to **NO**, this feature will go out at the end of each ball.
14	**RING MODE DIFFICULTY :** Set to **EASY, MODERATE, HARD** or **EXHARD**. Default is **EASY**. *Note: This adjustment controls how often the Ring Mode is lit.* **EASY** = Lit at Ball Start. **MODERATE** = Lit at Game Start, with Memory. **HARD** = Off at Game Start, with Memory. **EXTRA HARD** = Off at Ball Start.
15	**PATHS OF THE DEAD DIFFICULTY :** Set to **EXEASY, EASY, MODERATE, HARD** or **EXHARD**. Default is **MODERATE**. *Note: This adjustment controls how Spots are lit.* **EXTRA EASY** = 5 Spots Lit. **EASY** = 4 Spots Lit. **MODERATE** = 3 Spots Lit. **HARD** = 2 Spots Lit. **EXTRA HARD** = 1 Spot Lit.
16	**MYSTERY DIFFICULTY :** Set to **EASY, MODERATE, HARD** or **EXHARD**. Default is **HARD**. *Note: This adjustment controls how often the Mystery Mode is lit.* **EASY** = Lit at Ball Start. **MODERATE** = Lit at Game Start, with Memory. **HARD** = Off at Game Start, with Memory. **EXTRA HARD** = Off at Ball Start.
17	**MYSTERY EXTRA BALL MEMORY :** Set to **YES** or **NO**. Default is **NO**. When set to **YES**, this feature bonus *(Mystery EB) lit* will be retained in memory from *ball-to-ball* for the same player. When set to **NO**, this feature will go out at the end of each ball.
18	**MYSTERY SPECIAL MEMORY :** Set to **YES** or **NO**. Default is **NO**. *When set to* **YES**, this feature bonus *(Mystery Special) lit* will be retained in memory from *ball-to-ball* for the same player. When set to **NO**, this feature will go out at the end of each ball.
19	**SPOT RING (TARGET) DIFFICULTY :** Set to **EASY, MODERATE, HARD** or **EXHARD**. Default is **EASY**. *Note: Controls when the spot ring target is lit.* **EASY** = On at ball start. **MODERATE** = On at game start with memory. **HARD** = Off at game start with memory. **EXTRA HARD** = Off at ball start.
20	**ELF RING SPOTTING (DIFFICULTY) :** Set to **EXEASY, EASY, MODERATE** or **HARD** Default is **MODERATE**. *Note: Controls the number of cycles through the modes (i.e. a player has played all 6 modes) where shooting an unlit ring during normal play will spot an elf ring towards relighting the ring.* **EXTRA EASY** = 3 cycles. **EASY** = 2 cycles. **MODERATE** = 1 cycle. **HARD** = Never.
21	**DWARF RING SPOTTING (DIFFICULTY) :** Set to **EXEASY, EASY, MODERATE** or **HARD**. Default is **EASY**. *Note: Controls the number of mystery awards that can be collected where shooting an unlit mystery shot (Left VUK) will spot a dwarf ring towards relighting mystery.* **EXTRA EASY** = 3 mysteries. **EASY** = 2 mysteries. **MODERATE** = 1 mystery. **HARD** = Never.
22	**HUMAN RING SPOTTING (DIFFICULTY) :** Set to **EXEASY, EASY, MODERATE** or **HARD**. Default is **MODERATE**. *Note: Controls the number of Gollum Multiballs that can be collected where shooting an unlit Gollum Multiball shot (Right VUK) will spot a human ring towards lighting Gollum Multiball.* **EXTRA EASY** = 3 Multiballs. **EASY** = 2 Multiballs. **MODERATE** = 1 Multiball. **HARD** = Never.
23	**FELLOWSHIP (OF THE RING) MULTIBALL DIFFICULTY :** Set to **EASY, MODERATE** or **HARD**. Default is **MODERATE**. *Note: Controls which shots are lit to start Fellowship of the Ring Multibal.* **EASY** = Left VUK / Orthanc / Top Saucer / Rt. VUK. **MODERATE** = Top Saucer / Rt. VUK. **HARD** = Top Saucer.
24	**RETURN OF THE KING MULTIBALL DIFFICULTY :** Set to **EASY, MODERATE** or **HARD**. Default is **MODERATE**. *Note: Controls which shots are lit to start Return of the King Multiball.* **EASY** = Lt VUK / Orthanc / Top Saucer / Rt VUK. **MODERATE** = Orthanc / Rt VUK. **HARD** = Orthanc.
25	**CONSOLATION MYSTERY :** Set to **YES** or **NO**. Default is **YES**. *Note: Controls whether the game can light the mystery award for free on ball 3 if the player is having a poor game. If the game is set on competition mode, this adjustment will be treated as if set to No.*

Feature Adjustments 26-35 continued on the next page.

	FEATURE ADJUSTMENT NAME: Definition
26	**ALLOW VOLUME EFFECTS:** Set to **YES** or **NO**. Default is **YES**. Set to **NO** to disable this feature. Set to **YES**, the volume will automatically adjust louder and softer, depending on which feature (or certain events) is being played and/or how well the player is performing (or awards received). *Note: If the game volume is set to 0, this adjustment will be treated as if set to NO.*
27	**GAME START BALROG ROAR:** Set to **YES** or **NO**. Default is **YES**. Set to **NO** to disable this feature. *Note: This controls whether or not the Balrog roars as it closes at the start of a game.*
28	**BARAD-DÛR DIFFICULTY:** Set to **EXEASY, EASY, MODERATE, HARD** or **EXHARD**. Default is **MODERATE**. *Note: This controls how may shots are required for the initial award from Barad-dûr.*
29	**BARAD-DÛR EXTRA BALL MEMORY:** Set to **YES** or **NO**. Default is **YES**. Set to **NO** to disable this feature. When set to **YES**, this feature bonus *(Barad-dûr EB) lit* will be retained in memory from *ball-to-ball* for the same player. When set to **NO**, this feature will go out at the end of each ball.
30	**SPOT FELLOWSHIP MEMBERS:** Set to **YES** or **NO**. Default is **YES**. Set to **NO** to disable this feature. When set to **YES**, after a player's 1st ball, 1 Fellowship member will be spotted at each ball start until the Fellowship of the Ring Multiball is played.
31	**GOLLUM'S CAVE DIFFICULTY:** Set to **EXEASY, EASY, MODERATE, HARD** or **EXHARD**. Default is **MODERATE**. *Note: This controls how many shots are required for the initial award from Gollum's Cave.*
32	**EARLY BARAD-DÛR CRASH:** Set to **YES** or **NO**. Default is **YES**. Set to **NO** to disable this feature. *Note: This controls whether Barad-dûr can "fall over" other than winning "Destroy the Ring."*
33	**CAVE TROLL SEQUENCE:** Set to **ON** or **OFF**. Default is **OFF**. If set to **ON**, game adds the Cave Troll sequence to the start of The Fellowship of the Rings Multiball. If set to **OFF**, it goes straight to Balrog intro.
34	**CONSOLATION BALROG:** Set to **NONE**, **MYSTERY**, **CAVE** or **BOTH**. Default is **BOTH**. Set to **NONE** to disable this feature. *Note: This controls whether a player hasn't seen the Balrog, it allows it to come out on the following awards.* **MYSTERY** = can be randomly awarded, especially on Ball 3; **CAVE** = Will be the first award given from Cave Shots; **BOTH** = can be awarded by either Mystery or Cave, but at any rate there will only be one Consolation Balrog; **NONE** = no consolation Balrog will ever be awarded.
35	**DESTROY RING # BALLS:** Set between **1 - 2**. Default is **1**. When set to **1**, when the first magnet shot is made, the ball will be held briefly, then let go. In order to win *Destroy the Ring*, you must make the ring shot clean through the ring *(the magnet will not turn on)* so that the ball registers the *Backpanel Trough Switch.* When set to **2**, you must shoot the 4 shots, then shoot the ring. This ball is then held in the magnet indefinitely, and the goal is to knock out the first ball with a new ball launched into play.

For further customization of Game Play Difficulty or Game Play Type or how to RESET ONLY the Adjustments, see Section 3, Chapter 5, GO TO INSTALLS MENU.

Custom Message

To go directly to ***Standard Adjustment 31, Custom Message,*** from the **ADJUSTMENT MENU**, select the "CUST MSG" *Icon* with either the **Red "LEFT"** or **Green "RIGHT" Buttons** and press the **Black "ENTER" Button**. At the top left corner of the Display, the letter **A** is indicated *(blinking)* in the first available position *(Thirty-Six (36) characters including spaces are available).* Vary the letter(s) by operating the Left and Right Flipper Buttons *(or **"RED"** or **"GREEN" Buttons**).* With the desired letter indicated, depress the **Start Button** to lock in the letter and advance to the next character. Repeat this procedure until the desired message is completed in the display. Select the "<" or ">" characters to back-space *(erase)* and/or to move forward in an already typed message. After completion, press the **"BLACK" Button**, **"REQUEST INSTALLED"** is indicated and then exits this sub-menu.

For further customization of Game Play Difficulty or Game Play Type or how to RESET ONLY the Adjustments, see Section 3, Chapter 5, GO TO INSTALLS MENU.

Go To Adjustments Menu

Go To Installs Menu

Overview

The **Portals™ Service Menu System** provides **15 Installs** to vary **Game Play (Feature Adjustments) Difficulty** or **Game Play Type** and **Install Factory** *(restores all adjustments to Factory Defaults)*.

Important: *The **Coin Door** must be **OPEN** allowing the **Memory Protect Switch** to be disabled, so any Install changes can be made.*

For **detailed customization** or to check current **Adjustments Defaults** *(either changed by YOU in the Adjustments Menu or by this* **Installs** *Menu or for Factory Default Settings), see Section **3**, Chapter **4**, **GO TO ADJUSTMENTS MENU**. **Important: Before preceding***, write down any *previously changed Adjustment Defaults.* After completing one or more of the **Installs** in this Chapter, go back to the **ADJUSTMENTS MENU** to see which **Standard and/or Feature Adjustments** have changed *(Feature Adjustments and/or settings are subject to change during production, and may differ than what is described in the tables at the end of this chapter). If the settings are not to your liking, perform **one** of the following:*

1.: **Manually** change the **Standard & Feature Adjustments** Settings *(perform task in the **ADJUSTMENTS MENU**, see Section **3**, Chapter **4**, **GO TO ADJUSTMENTS MENU**).*

2.: **Install Factory** *(see opposite this page)* on how to reset all of the **Standard & Feature Adjustments** back to the *Factory Default Settings*.

Multiple **Installs can be set** to vary game play; however, for **Installs** that have *one or more* Adjustments in common, the ***last*** "Install" selected & *activated*, will **supersede** any previously changed Adjustment(s) from any prior **Installs**. Any adjustments which you changed and are not affected by the Install will remain as set.

For example, if you want a **5-BALL Game** *set to* **EXTRA EASY**: Select and *activate* the "5BAL" *Icon* first (which will typically change any ***Feature*** Difficulty Adjustments to **HARD**), then select & *activate* the "X.EZ" *Icon* to **change back** the Difficulty Adjustments to **EXTRA EASY**. However, if the "X.EZ" *Icon* was selected & *activated* first, then the "5BAL" *Icon* was selected & *activated*, the game will be set to a **5-BALL Game** *set to* **HARD**.

EXPLANATION & USAGE OF COMMON LARGE ICONS USED IN THIS MENU:

These ***non-selectable Icons*** appear in the *selected Menu* only when there are **MORE** Icons to the **LEFT** or to the **RIGHT** available for selection.

Select and activate to return to the **PREVIOUS** Menu.

Select and activate to **QUIT**, *exits & returns to the* ***Attract Mode***.

Select and activate to view **HELP** *Screens of the current Menu*.*

⚠ WARNING: ⚠
Selection & activation of the "Install Factory" Icon, will change all Adjustments & Installs to the Factory Default!

**** Help Note: An explanation of each Icon at that menu level will cycle continuously. To exit a display where no Icons are available for selection, pressing any button will exit the display.***

GO TO INSTALLS MENU

After entering **Portals™**, the **MAIN MENU** now appears. Select the "INST" *Icon* in the **MAIN MENU** with either the **Red "LEFT"** or **Green "RIGHT" Buttons** (the **Flipper Buttons** operates in the same manner) and press the **Black "ENTER" Button** (the **Start Button** operates in the same manner). The **INSTALLS MENU** appears. Continue through this chapter for the explanation & usage of the *Icons* in the **INSTALLS MENU**.

*View Pages **49** & **50** for an Overview of the Standard & Feature Adjustment(s) which have changed upon selection.*

Install Extra Easy, Easy, Normal, Hard or Extra Hard

To initiate, from the **INSTALLS MENU**, select the "X.EZ," "EASY," "FACT," "HARD," *or* "X.HD" *Icons* with either the **Red "LEFT"** or **Green "RIGHT" Buttons** and press the **Black "ENTER" Button**. **Game Play Difficulty** is set to **EXTRA EASY. "REQUEST INSTALLED"** is indicated and returns to the **INSTALLS MENU** with the previously selected *Icon* flashing.

*View Pages **49** & **50** for an Overview of the Standard & Feature Adjustment(s) which have changed upon selection.*

Install Directors Cut

To initiate, from the **INSTALLS MENU**, select the "DCUT" *Icon* with either the **Red "LEFT"** or **Green "RIGHT" Buttons** and press the **Black "ENTER" Button**. **Game Play Type** is set to programmers choice. **"REQUEST INSTALLED"** is indicated and returns to the **INSTALLS MENU** with the "DCUT" *Icon* flashing.

Install 3-Ball or 5-Ball

To initiate, from the **INSTALLS MENU**, select the "3BAL" *or* "5BAL" *Icon* with either the **Red "LEFT"** or **Green "RIGHT" Buttons** and press the **Black "ENTER" Button**. **Game Play Type** is set to **3-** *or* **5-BALL PLAY**. **"REQUEST INSTALLED"** is indicated and returns to the **INSTALLS MENU** with the previously selected *Icon* flashing.

$ .50 Competition (a.k.a. IFPA)

To initiate, from the **INSTALLS MENU**, select the "PAY" *Icon* with either the **Red "LEFT"** or **Green "RIGHT" Buttons** and press the **Black "ENTER" Button**. **Game Play Type** is set to **TOURNAMENT PAY MODE**. **"REQUEST INSTALLED"** is indicated and returns to the **INSTALLS MENU** with the "PAY" *Icon* flashing.

Free Play Competition (a.k.a. EXPO or PAPA)

To initiate, from the **INSTALLS MENU**, select the "FREE" *Icon* with either the **Red "LEFT"** or **Green "RIGHT" Buttons** and press the **Black "ENTER" Button**. **Game Play Type** is set to **TOURNAMENT FREE MODE**. **"REQUEST INSTALLED"** is indicated and returns to the **INSTALLS MENU** with the "FREE" *Icon* flashing.

Install Home Play

To initiate, from the **INSTALLS MENU**, select the "HOME" *Icon* with either the **Red "LEFT"** or **Green "RIGHT" Buttons** and press the **Black "ENTER" Button**. **Game Play Type** is set to **NORMAL HOME PLAY**. **"REQUEST INSTALLED"** is indicated and returns to the **INSTALLS MENU** with the "HOME" *Icon* flashing.

Film Star Reset

To initiate, from the **INSTALLS MENU**, select the "STAR" *Icon* with either the **Red "LEFT"** or **Green "RIGHT" Buttons** and press the **Black "ENTER" Button**. **Game Play Type** is set to **EASY HOME PLAY**. **"REQUEST INSTALLED"** is indicated and returns to the **INSTALLS MENU** with the "STAR" *Icon* flashing.

Install Novelty

This setting is recommended where ***local laws restrict certain game features***.

To initiate, from the **INSTALLS MENU**, select the "NOV" *Icon* with either the **Red "LEFT"** or **Green "RIGHT" Buttons** and press the **Black "ENTER" Button**. **Game Play Type** is set to **RESTRICTED PLAY**. **"REQUEST INSTALLED"** is indicated and returns to the **INSTALLS MENU** with the "NOV" *Icon* flashing.

Install Add-A-Ball

This setting is recommended where ***local laws restrict certain game features***.

To initiate, from the **INSTALLS MENU**, select the "A.A.B" *Icon* with either the **Red "LEFT"** or **Green "RIGHT" Buttons** and press the **Black "ENTER" Button**. **Game Play Type** is set to **RESTRICTED PLAY**. **"REQUEST INSTALLED"** is indicated and returns to the **INSTALLS MENU** with the "A.A.B" *Icon* flashing.

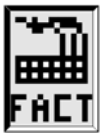

Install Factory (ONLY affects all Adjustments/Installs)

To initiate, from the **INSTALLS MENU**, select the "FACT" *Icon* with either the **Red "LEFT"** or **Green "RIGHT" Buttons** and press the **Black "ENTER" Button**. ⚠ All Standard & Feature Adjustments which were changed in the **INSTALLS** or **ADJUSTMENTS MENU** are returned to the ***Factory Defaults***.

Overview of Standard Adjustment Changes upon selection of an Install:

ONLY THE STANDARD ADJUSTMENTS LISTED ARE AFFECTED AS NOTED IN THE TABLES BELOW.

Nr.	STANDARD ADJUSTMENT NAME	INSTALL EXTRA EASY	INSTALL EASY	INSTALL NORMAL	INSTALL HARD	INSTALL EXTRA HARD	INSTALL DIRECTORS CUT	INSTALL 3-BALL	INSTALL 5-BALL
10	EXTRA BALL PERCENTAGE	30%	25%	20%	15%	10%		20%	10%
14	BALLS PER GAME							03	05
38	FREEZE TIME	0:12	0:10	0:08	OFF	OFF		0:08	AUTO

ONLY THE STANDARD ADJUSTMENTS LISTED ARE AFFECTED AS NOTED IN THE TABLES BELOW.

Nr.	STANDARD ADJUSTMENT NAME	$ .50 COMPE-TITION *	FREE PLAY COMP. *	INSTALL HOME PLAY	FILM STAR RESET	INSTALL NOVELTY	INSTALL ADD-A-BALL	INSTALL FACTORY
01	REPLAY TYPE					NONE		
03	REPLAY AWARD						EX. BALL	
04	REPLAY LEVELS					NONE		
06	SPECIAL AWARD					POINTS	EX. BALL	
08	FREE GAME LIMIT					NO FREE..	NO FREE..	
09	EXTRA BALL LIMIT					NO EXTRA...	09	
10	EXTRA BALL PERCENTAGE			20%	20%			
11	GAME PRICING	USA 3						
13	MATCH PERCENTAGE			10%		OFF	OFF	
15	TILT WARNINGS	02	02					
18	GRAND CHAMPION AWARDS					00	00	
19	HIGH SCORE #1 AWARDS					00	00	
20	HIGH SCORE #2 AWARDS					00	00	
21	HIGH SCORE #3 AWARDS					00	00	
22	HIGH SCORE #4 AWARDS					00	00	
23	GRAND CHAMPION SCORE			25,000,000				
24	DEFAULT HIGH SCORE #1			20,000,000				
25	DEFAULT HIGH SCORE #2			15,000,000				
26	DEFAULT HIGH SCORE #3			10,000,000				
27	DEFAULT HIGH SCORE #4			5,000,000				
30	FREE PLAY	NO	YES	YES	YES			
35	GAME RESTART	NO	NO					
38	FREEZE TIME				0:10			
42	COINDOOR BALL SAVER **	(YES) **	(YES) **					
43	COMPETITION MODE ***	YES ***	YES ***					

CAUTION! : Upon selection of **Install Factory** *("FACT" Icon)*, all Standard & Feature Adjustments which were changed in the **INSTALLS** or **ADJUSTMENTS MENU** are returned to the ***Factory Defaults*** *(see the Adjustment Tables on Page 38 for details).*

* If ***Competition Mode*** was set, it is suggested to **Install Factory** to restore all Adjustments *to the Factory Defaults.* Then recustomize, if desired.

*** Adjustment 42 Default **will not change**; Installing $ .50 **or** Free Play Competition will override this Adjustment regardless of the setting.*
**** If Adjustment 43 is changed back to **NO** after this Install, the Competition Mode Install will be canceled (turned off).*

Overview of Feature Adjustment Changes upon selection of an Install:

ONLY THE FEATURE ADJUSTMENTS LISTED ARE AFFECTED AS NOTED IN THE TABLES BELOW.

Nr.	FEATURE ADJUSTMENT NAME	INSTALL EXTRA EASY	INSTALL EASY	INSTALL NORMAL (FACTORY)	INSTALL HARD	INSTALL EXTRA HARD	INSTALL DIRECTORS CUT	INSTALL 3-BALL	INSTALL 5-BALL
01	NUM. RING COMBOS-LEVEL	15	12	10	8	5		10	10
02	TWO TOWERS MB DIFF	EX. EASY	EASY	MODERATE	HARD	EX. HARD		MODERATE	HARD
03	1ST HARD TTT MB	2	1	1	1	1		1	1
04	TTT LOCK DIFFICULTY	EX. EASY	EX. EASY	EASY	HARD	HARD		EASY	HARD
05	PALANTIR DIFFICULTY	EASY	EASY	EASY	MODERATE	HARD		EASY	MODERATE
06	FELLOWSHIP DIFFICULTY	EASY	EASY	EASY	MODERATE	HARD		EASY	EASY
07	RING MULTIBALL DIFF	EASY	EASY	MODERATE	MODERATE	HARD		MODERATE	MODERATE
08	RING MBALL E. BALL MEM	YES	YES	NO	NO	NO		NO	NO
09	RING MBALL SPECIAL MEM	YES	NO	NO	NO	NO		NO	NO
10	ELF GIFT E. BALL MEM	YES	YES	YES	YES	NO		YES	YES

Overview of Feature Adjustment Changes (this table) ... continued on the next page.

Overview of Feature Adjustment Changes upon selection of an Install Continued:

ONLY THE FEATURE ADJUSTMENTS LISTED ARE AFFECTED AS NOTED IN THE TABLES BELOW.

Nr.	FEATURE ADJUSTMENT NAME	INSTALL EXTRA EASY	INSTALL EASY	INSTALL NORMAL (FACTORY)	INSTALL HARD	INSTALL EXTRA HARD	INSTALL DIRECTORS CUT	INSTALL 3-BALL	INSTALL 5-BALL
11	ELF GIFT SPECIAL MEM	YES	YES	YES	NO	NO		YES	NO
12	RING FRENZY E. BALL DIFF	EX. EASY	EASY	MODERATE	HARD	EX. HARD		MODERATE	HARD
13	RING FRENZY E. BALL MEM	YES	YES	NO	NO	NO		NO	NO
14	RING MODE DIFFICULTY	EASY	EASY	EASY	MODERATE	HARD		EASY	MODERATE
15	PATHS OF THE DEAD DIFF	EX. EASY	EASY	MODERATE	HARD	EX. HARD		MODERATE	HARD
16	MYSTERY DIFFICULTY	EASY	MODERATE	HARD	HARD	HARD		HARD	HARD
17	MYSTERY EB MEMORY	YES	YES	NO	NO	NO		NO	NO
18	MYSTERY SPECIAL MEM.	YES	NO	NO	NO	NO		NO	NO
19	RING TARGET DIFF.	EASY	EASY	EASY	HARD	EX. HARD		EASY	HARD
20	ELF RING DIFFICULTY	EX. EASY	EASY	MODERATE	HARD	HARD		MODERATE	MODERATE
21	DWARF RING DIFF	EX. EASY	EASY	EASY	MODERATE	HARD		EASY	MODERATE
22	HUMAN RING DIFF	EX. EASY	EASY	MODERATE	HARD	HARD		MODERATE	MODERATE
23	FOTR MB START DIFF	EASY	HARD	HARD	HARD	HARD		HARD	MODERATE
24	ROTK MB START DIFF	EASY	EASY	MODERATE	HARD	HARD		MODERATE	MODERATE
25	CONSOLATION MYSTERY	YES	YES	YES	NO	NO		YES	NO
27	GAME START BALROG ROAR						NO		
28	BARAD-DÛR DIFFICULTY	EX. EASY	EASY	MODERATE	HARD	EX. HARD		MODERATE	HARD
29	BARAD-DÛR E. B. MEMORY	YES	YES	YES	YES	NO		YES	YES
30	SPOT FELLOWSHIP MBRS.	YES	YES	YES	NO	NO		YES	NO
31	GOLLUM'S CAVE DIFF.	EX. EASY	EX. EASY	EASY	HARD	HARD		EASY	MODERATE
32	EARLY BARAD-DÛR CRASH						NO		
33	CAVE TROLL SEQUENCE						ON		
34	CONSOLATION BALROG						NONE		
35	DESTROY RING # BALLS						2		

ONLY THE FEATURE ADJUSTMENTS LISTED ARE AFFECTED AS NOTED IN THE TABLES BELOW.

Nr.	FEATURE ADJUSTMENT NAME	$ .50 COMPE-TITION *	FREE PLAY COMP. *	INSTALL HOME PLAY	FILM STAR RESET	INSTALL NOVELTY	INSTALL ADD-A-BALL	INSTALL FACTORY
01	NUM. RING COMBOS-LEVEL				15			
02	TWO TOWERS MB DIFF				EX. EASY			
03	1ST HARD TTT MB				2			
04	TTT LOCK DIFFICULTY				EX. EASY			
05	PALANTIR DIFFICULTY				EASY			
06	FELLOWSHIP DIFFICULTY				EASY			
07	RING MULTIBALL DIFF				EASY			
08	RING MBALL E. BALL MEM				YES			
09	RING MBALL SPECIAL MEM				YES			
10	ELF GIFT E. BALL MEM				YES			
11	ELF GIFT SPECIAL MEM				YES			
12	RING FRENZY E. BALL DIFF				EX. EASY			
13	RING FRENZY E. BALL MEM				YES			
14	RING MODE DIFFICULTY				EASY			
15	PATHS OF THE DEAD DIFF				EX. EASY			
16	MYSTERY DIFFICULTY				EASY			
17	MYSTERY EB MEMORY				YES			
18	MYSTERY SPECIAL MEM.				YES			
19	RING TARGET DIFF.				EASY			
20	ELF RING DIFFICULTY				EX. EASY			
21	DWARF RING DIFF				EX. EASY			
22	HUMAN RING DIFF				EX. EASY			
23	FOTR MB START DIFF				EASY			
24	ROTK MB START DIFF				EASY			
25	CONSOLATION MYSTERY				YES			
28	BARAD-DÛR DIFFICULTY				EASY			
29	BARAD-DÛR E. B. MEMORY				YES			
30	SPOT FELLOWSHIP MBRS.				YES			
31	GOLLUM'S CAVE DIFF.				EASY			

CAUTION! :
Upon selection of **Install Factory** *("FACT" Icon)*, all Standard & Feature Adjustments which were changed in the **INSTALLS** or **ADJUSTMENTS MENU** are returned to the ***Factory Defaults*** *(see the Adjustment Tables on Page 38 for details).*

Go To Installs Menu

Go To Reset Menu

Overview

The **Portals™ Service Menu System** provides five (5) functions to reset **Coin & Game Audits**, **High Scores**, **Credits** *or to reset* **ALL AUDITS, ADJUSTMENTS & INSTALLS** back to the ***Factory Default Settings***.

Important: *The **Coin Door** must be **OPEN** allowing the **Memory Protect Switch** to be disabled, so any Reset changes can be made.*

EXPLANATION & USAGE OF COMMON LARGE ICONS USED IN THIS MENU:

These ***non-selectable Icons*** appear in the *selected Menu* only when there are **MORE** Icons to the **LEFT** or to the **RIGHT** available for selection.

Select and activate to return to the **PREVIOUS** Menu.

Select and activate to **QUIT**, *exits & returns to the* ***Attract Mode***.

Select and activate to view **HELP** *Screens of the current Menu*.*

⚠ WARNING: ⚠
As soon as any Reset Icon is selected & activated, the information associated with the Reset Icon, is lost!

**** Help Note: An explanation of each Icon at that menu level will cycle continuously. To exit a display where no Icons are available for selection, pressing any button will exit the display.***

GO TO RESET MENU

After entering **Portals™**, the **MAIN MENU** now appears. Select the "RESET" *Icon* in the **MAIN MENU** with either the **Red "LEFT"** or **Green "RIGHT" Buttons** (the **Flipper Buttons** operates in the same manner) and press the **Black "ENTER" Button** (the **Start Button** operates in the same manner). The **RESET MENU** appears. Continue below for the explanation & usage of the *Icons* in the **RESET MENU**.

Reset Coin Audits

To initiate, from the **RESET MENU**, select the "COIN" *Icon* with either the **Red** or **Green Buttons** and press the **Black Button**. ⚠ **ONLY** the **Coin Audits (05-13)** will be reset to zero (0), *Factory Default Settings.* **"REQUEST INSTALLED"** is indicated and returns to the **RESET MENU** with the "COIN" *Icon* flashing.

Reset Game Audits

To initiate, from the **RESET MENU**, select the "AUD" *Icon* with either the **Red** or **Green Buttons** and press the **Black Button**. ⚠ **ONLY** the **Game Audits *(01-04)*** & ***Standard Audits (01-67)*** will be reset to zero (0), *Factory Default Settings.* ***Note: Coin Audits (05-13)*** & ***Software Meter Audit (14)*** *will not be reset.* **"REQUEST INSTALLED"** is indicated and returns to the **RESET MENU** with the "AUD" *Icon* flashing.

Reset High Scores

To initiate, from the **RESET MENU**, select the "HSTD" *Icon* with either the **Red** or **Green Buttons** and press the **Black Button**. ⚠ **ONLY** the **High Scores** will be reset to the current values. ***Note:*** *If these five (5) adjustments were not personally changed by you, the Factory Default Settings will be used (see Section **3**, Chapter **4**, **GO TO ADJUSTMENTS MENU**, **Standard Adjustments** 18-22).* **"REQUEST INSTALLED"** is indicated and returns to the **RESET MENU** with the "HSTD" *Icon* flashing.

Reset Credits

To initiate, from the **RESET MENU**, select the "CRED" *Icon* with either the **Red** or **Green Buttons** and press the **Black Button**. ⚠ All **Credits** will be reset to zero (0), *Factory Default Settings.* **"REQUEST INSTALLED"** is indicated and returns to the **RESET MENU** with the "CRED" *Icon* flashing.

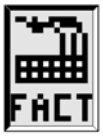

Factory Reset

To initiate, from the **RESET MENU**, select the "FACT" *Icon* with either the **Red** or **Green Buttons** and press the **Black Button**. ⚠ All **Audits** *(except for Audit **14**, **Software Meter**)*, all **Adjustments** and **Installs** will be reset to the *Factory Default Settings.* ***Note:*** *To **RESET ONLY** the ADJUSTMENTS & INSTALLS (leaving all the Audits alone), see Section **3**, Chapter **5**, **GO TO INSTALLS MENU**, **Install Factory**.* **"REQUEST INSTALLED"** is indicated and the **Service Menu** is exited, returning to the ***Attract Mode***.

Example:

After entering **Portals**™, the **MAIN MENU** now appears. Use the **Red "LEFT"** or **Green "RIGHT" Buttons** to select the "RESET" *Icon* (**GO TO RESET MENU**).

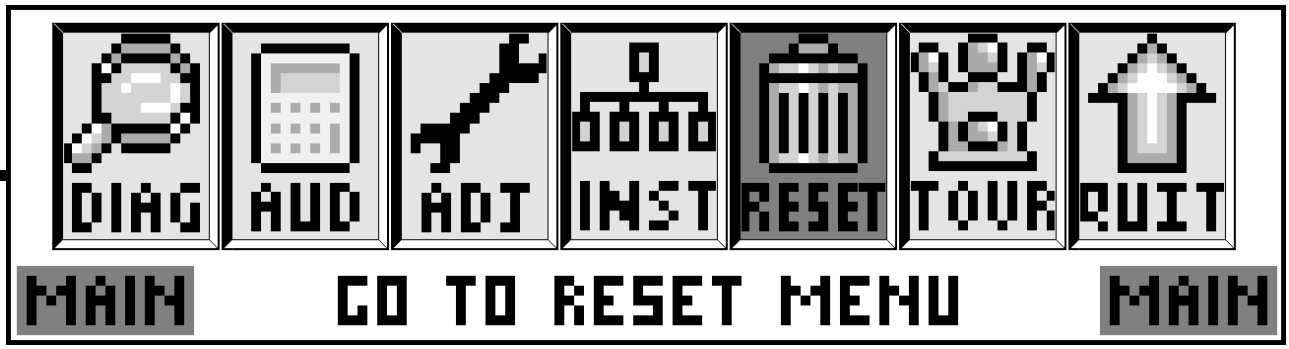

Press the **Black "ENTER" Button** to *activate* this **ICON**. The **RESET MENU** now appears with the "COIN" *Icon* (**RESET COIN AUDITS**) flashing:

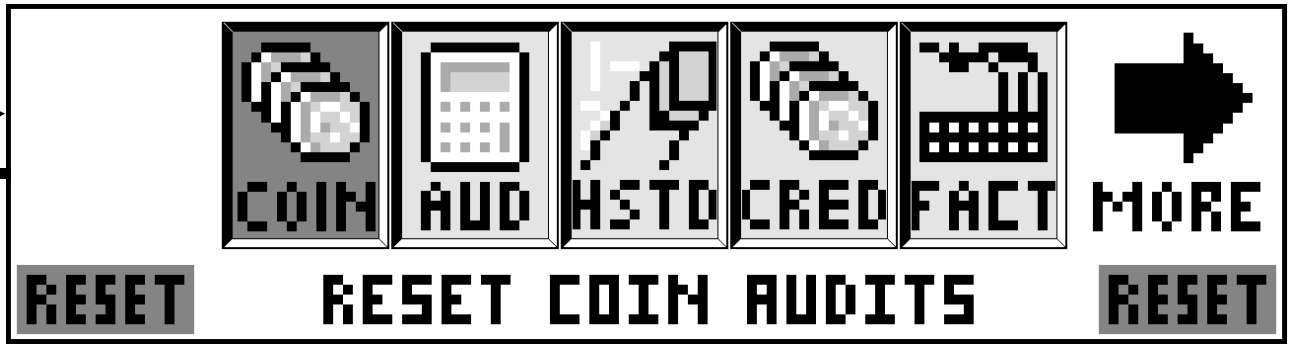

From the **RESET MENU**, select any of the *Icons* ("COIN", "AUD", "HSTD", "CRED") with either the **Red** or **Green Buttons** and press the **Black Button** to *activate* the **ICON** chosen. After the **ICON** is selected & *activated*, **"REQUEST INSTALLED"** is indicated and is returned to the **RESET MENU** with the previously selected *Icon* flashing.

Important:

AT THIS TIME, ***DO NOT*** PRESS THE **START BUTTON** OR **BLACK BUTTON** AFTER SELECTING ANY OF THE FIVE (5) ICONS UNLESS THIS IS WHAT IS DESIRED. ***THE INFORMATION ASSOCIATED WITH THE RESET ICON WILL BE LOST!*** *PLEASE READ THE PREVIOUS PAGE* FOR EXACTLY WHAT WILL HAPPEN IF ANY OF THESE FIVE (5) ICONS ARE *SELECTED & ACTIVATED.*

*Before performing any **RESET**, write down your **last Audit Totals** (see Section **3**, Chapter **3**, **GO TO AUDITS MENU**) and any **personalized Adjustment changes** you may have made (see Section **3**, Chapter **4**, **GO TO ADJUSTMENTS MENU**).*

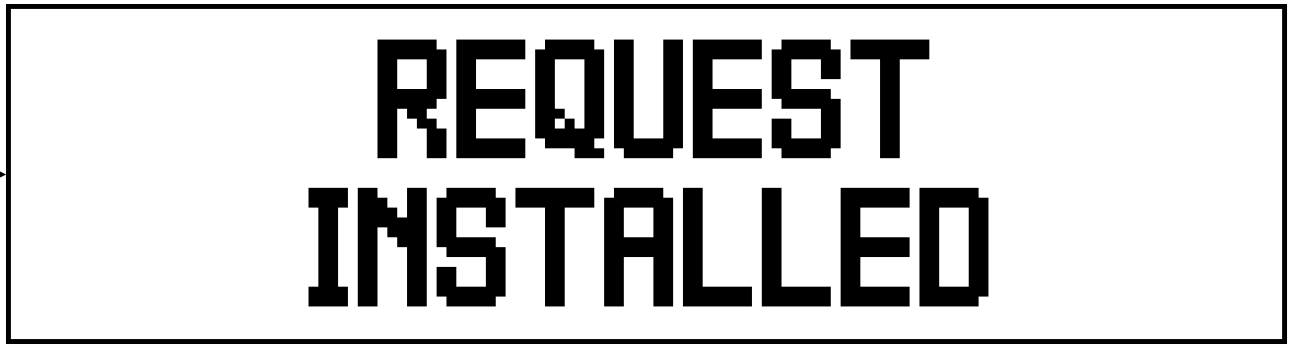

If the "FACT" *Icon* is select and *activated*, "**REQUEST INSTALLED"** is indicated and the **Service Menu** is exited, returning to the ***Attract Mode***. *See the previous page for explanation & usage of the Icons in the **RESET MENU**.*

Go To Reset Menu

Go To Tournament Menu

Overview

The **Portals™ Service Menu System** provides **6** Steps necessary to **SET-UP**, **START**, **MONITOR** and **END** Pinball Tournaments on your *Tournament Pinball System Ready Pinball Game.* ***OPTIONAL EQUIPMENT & HARDWARE (SOLD SEPARATELY) ARE REQUIRED FOR PROPER OPERATION AND USE OF THIS MENU.***

Game code may get upgraded during production; compare all Tournament Adjustments & Audits in the display with the manual and make any corrections to the Tournament Adjustments and/or Audits Tables *(next page),* as necessary. Tournament Adjustments & Audits are subject to change *(with or without notice)*. To view Tournament Adjustments & Audits in the display, enter the **Portals™ Service Menu System**. When any change is made and then the next / previous item is selected *(or the Sub-Menu is exited)*, the display will momentarily flash **REQUEST INSTALLED**. *For details on* ***Earnings, Standard & Feature Audits****, see Section* ***3****, Chapter* ***3****,* ***GO TO AUDITS MENU****. For details on* ***Standard & Feature Adjustments****, see Section* ***3****, Chapter* ***4****,* ***GO TO ADJUSTMENTS MENU****.*

Tournament Operation Note:

The use of the *Tournament Equipment* and/or running a Tournament is **OPTIONAL** and to be used solely in the discretion of the owner.

It is the sole responsibility of the operator to ensure that this product is used in conformity with all applicable laws. Stern Pinball, Inc.® disclaims any such responsibility.

Due to continuing product innovation, information in this chapter is subject to change without notice.

For more details on the equipment & hardware required, Installation and Set-up, read the **ToPS™ Tournament Pinball System Kit Installation Manual** *(SPI Part Number: 780-6011-00)* provided in the ***Optional Tournament Kit*** *(SPI Part Number: 502-5011-00),* not included with this *ToPS™ Ready Pinball Game.*

The equipment & hardware consists of: BETAbrite **Electronic 7 X 80 Multi-Color Dot Display** (*secured above the Backbox*), **Tournament Serial Interface (TSI) Board** *(secured in the Backbox)*, **Tournament Button + Lamp** (*secured onto the Front Molding)* and all necessary wiring, hardware and documentation *(which also provides suggestions and Tips for ToPS™).*

To order, contact your local Distributor *(view Pages* ***DR.*** ❽ *&* ❾ *in the* ***Find-It-In-Front: Dr. Pinball****).* You can also call Technical Support or visit our website *(details on the back cover of this manual).*

Important: *The* ***Coin Door*** *must be* ***OPEN*** *allowing the* ***Memory Protect Switch*** *to be disabled, so any Tournament changes can be made.*

EXPLANATION & USAGE OF COMMON LARGE & MINI-ICONS USED IN VARIOUS MENUS & SUB-MENUS:

These ***non-selectable Icons*** appear in the *selected Menu* only when there are **MORE** Icons to the **LEFT** or to the **RIGHT** available for selection.

Select and activate to return to the **PREVIOUS** Menu.

Select and activate to **QUIT**, *exits & returns to the* ***Attract Mode****.*

Select and activate to view **HELP** *Screens of the current Menu*.*

Select and activate to:

Move **LEFT** *or* **RIGHT**, *select previous / next or move backwards / forwards.*

DECREMENT (-) *or* **INCREMENT (+)** *displayed value or select previous / next.*

**** Help Note: An explanation of each Mini-Icon at that menu level will cycle continuously. To exit a display where no Mini-Icons are available for selection, pressing any button will exit the display.***

GO TO TOURNAMENT MENU (OPTIONAL USE ONLY)

After entering **Portals™**, the **MAIN MENU** now appears. Select the "TOUR" *Icon* in the **MAIN MENU** with either the **Red "LEFT"** or **Green "RIGHT" Buttons** (the **Flipper Buttons** operates in the same manner) and press the **Black "ENTER" Button** (the **Start Button** operates in the same manner). The **TOURNAMENT MENU** appears. Continue through this chapter for the explanation & usage of the *Icons* in the **TOURNAMENT MENU**.

Tournament Adjustment & Audit Tables on the next page.

TOURNAMENT ADJUSTMENT TABLES

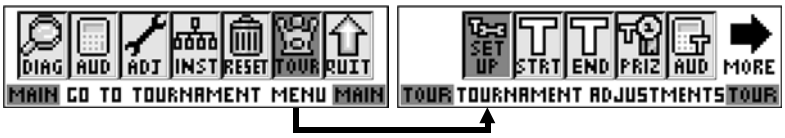

TOURNAMENT ADJUSTMENTS 01-13 ✍ = ✎

Nr.	ADJUSTMENT NAME	USA DEFAULT	YOUR SETTING
01	CREDITS PER PLAY	02	
02	JACKPOT BASE	$20.00	
03	JACKPOT INCREMENT	$00.50	
04	JACKPOT MAX.	$2,500.00	
05	CURRENT DATE/TIME	JANUARY...	
06	START DATE	JANUARY 1	
07	END DATE	FEBRUARY 1	

Nr.	ADJUSTMENT NAME	USA DEFAULT	YOUR SETTING
08	# OF PRIZES	03	
09	AWARD TYPE	CASH	
10	SHOW PLAYER'S CASH	YES	
11	TOURNAMENT TYPE	REGULAR	
12	BUMP N' WIN BASE	20,000,000	
13	BALLS PER TOURNAMENT	03	

Note: *The above adjustments must be set just before selecting and activating the "STRT" Icon (**START TOURNAMENT**). See the following pages for explanation and more details.*

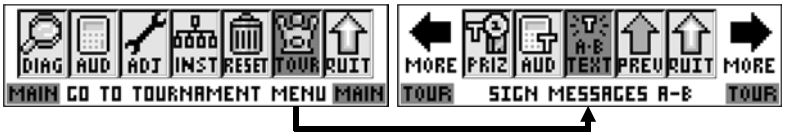

SIGN MESSAGES A-B (ADJUSTMENTS 14-15) ✍ = ✎

Nr.	ADJUSTMENT NAME	USA DEFAULT	YOUR SETTING
14	LOCATION MESSAGE	ON	

Nr.	ADJUSTMENT NAME	USA DEFAULT	YOUR SETTING
15	PRIZE MESSAGE	ON	

STARTING METER Reading :

STARTING METER Date (MM/DD/YR) : 0

AUDITOR'S NAME :

CURRENT VOLUME SETTING:

CURRENT METER Reading :

AUDIT Date (MM/DD/YR) : 0

CPU Version : .

DISPLAY Version : .

GAME LOCATION NAME :

See Adj. 06 & 07 above >>

TOURNAMENT START DATE : 0

TOURNAMENT END DATE : 0

TOURNAMENT AUDIT TABLE

TOURNAMENT AUDITS 01-12 ✍ = ✎

Audit definitions follow in this Chapter.

01	TOTAL PLAYS	06	NET EARNINGS	11	ACCUM. JACKPOT
02	TOURNAMENT PLAYS	07	ACCUM. TOTAL PLAYS	12	# TOURNAMENTS
03	TOTAL GAME EARNINGS	08	ACCUM. TOUR. PLAYS		
04	TOTAL TOUR. EARNINGS	09	ACCUM. EARNINGS		
05	JACKPOT	10	ACCUM. TOUR EARNINGS		

Tournament Adjustments (01-13)

To initiate, from the **TOURNAMENT MENU**, select the "SET UP" *Icon* with either the **Red "LEFT"** or **Green "RIGHT" Buttons** and press the **Black "ENTER" Button**. Select and *activate* either of the ">>" *Mini-Icon*s to view the next or previous Tournament Adjustment in this group. Select and *activate* either of the "-" or "+" *Mini-Icons* to change the setting, if desired *(the Default Setting is noted in the definitions below)*. The display will describe the **Tournament Adjustment Number**, **Tournament Adjustment Name** and the **Current Tournament Adjustment Setting**. The current Tournament Adjustment will remain in the display until the next Tournament Adjustment is viewed or when this Menu is exited.

IMPORTANT FOR TOURNAMENT USERS: *Select the settings carefully.* For **Tips for ToPS™** *(different Tournament Sample Set-Ups, etc.),* view the **ToPS™Tournament Pinball System Kit Installation Manual** *(SPI Part Number: 780-6011-00)* provided in the ***Optional Tournament Kit*** *(SPI Part Number: 502-5011-00).* Before allowing players to begin after you've started a Tournament, double-check the **Normal Mono-Color Dot Display** and **Top Multi-Color Dot (Beta Brite®) Display** to ensure everything you want is displayed correctly. Once a Tournament is started, no adjustments can be made until you end the Tournament *(by selecting the "END" Icon).* Allowing players to qualify, then ending a Tournament prematurely to make corrections will affect the outcome of the Tournament. *View the **ToPS™** Manual for more details.*

WARNING: Changes made in any Adjustments will be lost after a FACTORY RESET or removal of the CPU/Sound Board Batteries.

Nr.	TOURNAMENT ADJUSTMENT NAME: Definition
01	**CREDITS PER PLAY:** Set between **01 - 10**. Default is **02**. Set the maximum number of *Credits* that may be accumulated per game.
02	**JACKPOT BASE:** Set between **$00.00 - $999,999.00** *(increments of $1).* Default is **$20.00**. Set the initial *Prize Pool Amount* to be offered for the Tournament. ***Note:*** *The displays will present the words "**PRIZE POOL**" in lieu of the word "JACKPOT".*
03	**JACKPOT INCREMENT:** Set between **$00.00 - $999,999.99** *(increments of 1¢).* Default is **$00.50**. Set the *Prize Pool Increment* which will increase the *Prize Pool Amount* with each Tournament Game played.
04	**JACKPOT MAX.:** Set between **$00.00 - $999,999.00** *(increments of $1).* Default is **$2,500.00**. Set the maximum cap to be placed on the *Prize Pool* during a Tournament. ***Note:*** *The displays will present the words "**PRIZE POOL**" in lieu of "JACKPOT".*
05	**CURRENT DATE/TIME:** Set the current date and time. After setting the Start and End Dates in Tournament Adjustments 6 & 7, the Tournament will then start automatically*. **Requires the TIMEKEEPER™ IC (included in the kit) installed in Location U212 on the CPU/Sound Board.*
06	**START DATE:** Set between **JANUARY** through **DECEMBER**. Default is **JANUARY**. After the month desired is set, a **valid day** must be set. To **Start a Tournament**, go back to the **TOURNAMENT MENU** and select the "STRT" *Icon (see the next page).*
07	**END DATE:** Set between **JANUARY** through **DECEMBER**. Default is **FEBRUARY**. After the month desired is set, a **valid day** must be set. To **End a Tournament**, go back to the **TOURNAMENT MENU** and select the "END" *Icon (see the next page).*
08	**# OF PRIZES:** Set between **01 - 05**. Default is **03**. Set the maximum number of *Prize Positions* to be awarded during a Tournament. Selections *(cannot be changed)* are as follows: Set to **01**, the Tournament Winner is awarded **100%** of the Prize Pool. Set to **02**, the 1st & 2nd place winners are awarded **70%** / **30%**, respectively. Set to **03**, the 1st, 2nd & 3rd place winners are awarded **50%** / **30%** / **20%**, respectively. Set to **04**, the 1st, 2nd, 3rd & 4th place winners are awarded **50%** / **25%** / **15%** / **10%**, respectively. Set to **05**, the 1st, 2nd, 3rd, 4th & 5th place winners are awarded **50%** / **20%** / **15%** / **10%** / **5%**, respectively.
09	**AWARD TYPE:** Set to **CASH**, **POINTS**, **TICKET**, **NONE** or **PRIZE**. Default is **CASH**. ***This adjustment determines how the Prize Pool is to be represented in the Attract Mode on both the Normal and top Beta-Brite® Displays.*** Select **CASH** for the displays to represent the Prize Pool amount *(based on Jackpot Base and Max.)* in ***$Dollars***. Select **POINTS** for the displays to represent the Prize Pool amount in ***Points***. Select **TICKET** for the display to represent the Prize Pool amount in ***Tickets***. Select **NONE** ***NOT TO*** represent the Prize Pool amount *(if prize(s) to be awarded are not Cash, Points or Tickets).* Select **PRIZE**, if applicable.
10	**SHOW PLAYER'S CASH:** Set to **YES** or **NO**. Default is **YES**. When set to **YES**, both the **Beta-Brite® Multi-Color** and the **Normal Mono-Color Dot Displays** exhibit the Cash amount in the ***Attract Mode***.
11	**TOURNAMENT TYPE:** Set to **REGULAR** or **BUMP N' WIN**. Default is **REGULAR**.
12	**BUMP N' WIN BASE:** Set between **5,000,000 - 50,000,000** *(increments of 1M).* Default is **20,000,000**. Set the desired ***Bump N' Win Tournament*** base score. ***Tournament Adj. 11*** *must be set to* ***BUMP N' WIN.***
13	**BALLS PER TOURNAMENT:** Set between **02 - 09**. Default is **03**. Set the max. number of balls per game.

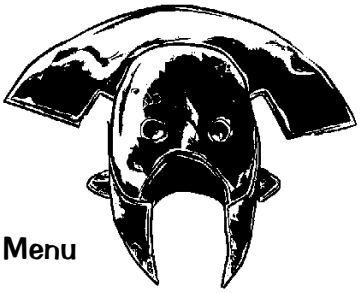

Start Tournament (select only after Set-Up is completed)

To initiate, from the **TOURNAMENT MENU**, select the "STRT" *Icon* with either the **Red "LEFT"** or **Green "RIGHT" Buttons** and press the **Black "ENTER" Button**. The **"START TOURNAMENT?" MENU** appears with the "NO" *Mini-Icon* flashing.

START TOURNAMENT?

NO YES QUIT ?

If ***Set-Up (Tournament Adjustments)*** *was not completed* ***OR*** the ***Tournament Audits were not recorded from the prior Tournament***, exit this Menu by activating the "NO" *Mini-Icon*. If ***Set-Up*** *was completed and the* ***Tournament Audits*** *were recorded,* select and activate the "YES" *Mini-Icon.* The Pinball Game is set to **Tournament Ready Mode** *(the* ***Flashing Tournament Button*** *must be depressed for a Tournament Game after the proper credit is inserted).* **"REQUEST INSTALLED"** is indicated and returns to the **TOURNAMENT MENU** with the "STRT" *Icon* flashing. ***Note:*** *If the "STRT" Icon appears to be non-functioning, it is because a Tournament is in progress. The Tournament must first be stopped (select and activate the "END" Icon in the* ***TOURNAMENT MENU****).*

Stop Tournament (select only after a Tournament is started)

To initiate, from the **TOURNAMENT MENU**, select the "END" *Icon* with either the **Red "LEFT"** or **Green "RIGHT" Buttons** and press the **Black "ENTER" Button**. The **"END TOURNAMENT?" MENU** appears with the "NO" *Mini-Icon* flashing. If the ***Tournament*** *was not completed*, exit this Menu by activating the "NO" *Mini-Icon*. If the ***Tournament*** *was completed (the End Date set has passed)*, select and activate the "YES" *Mini-Icon. The Pinball Game is taken out of* **Tournament Ready Mode** *(to readjust any Tournament Adjustments, the Tournament must be "stopped").* **"REQUEST INSTALLED"** is indicated and returns to the **TOURNAMENT MENU** with the "END" *Icon* flashing. ***Record your Tournament Audits at this time as they will be reset (except for the "Accumulative Audits) if another Tournament is started!***

END TOURNAMENT?

NO YES QUIT ?

Tournament Prizes

To initiate, from the **TOURNAMENT MENU**, select the "PRIZ" *Icon* with either the **Red "LEFT"** or **Green "RIGHT" Buttons** and press the **Black "ENTER" Button**. Select and *activate* either of the ">>" *Mini-Icons* to view the next or previous Leader in this group. The display will describe the **Leader Placement (1st, 2nd, 3rd, 4th & 5th)**, **Leader Name**, **4-Digit Pin-Code**, and **Prize Pool** portion for the *Current and Previous Tournaments.* The current Leader *(and related information)* will remain in the display until the next Leader is chosen or when the Sub-Menu is exited.

Tournament Audits (01-12)

To initiate, from the **TOURNAMENT MENU**, select the "AUD" *Icon* with either the **Red "LEFT"** or **Green "RIGHT" Buttons** and press the **Black "ENTER" Button**. Select and *activate* either of the ">>" *Mini-Icons* to view the next or previous Tournament Audit in this group. The display will describe the **Tournament Audit Number**, **Tournament Audit Name** and the **Current Tournament Audit Total** (Value). The current Tournament Audit will remain in the display until the next Tournament Audit is viewed or when this Menu is exited.

IMPORTANT FOR TOURNAMENT USERS: ***>>>> A L L*** *of the Tournament Audits* ***01-12 are RESET O N L Y if a Factory Reset is done*** *(see Section* ***3****, Chapter* ***6****,* ***GO TO RESET MENU****).* ***>>>> Tournament Audits 01-06 are RESET ONLY if a new Tournament is started****.* ***>>>> Tournament Audits 07-12*** *are* ***NOT RESET****, they're accumulative (totals accumulate since the first Tournament was played).* **if no Factory Reset is done.*

Nr.	TOURNAMENT AUDIT NAME: Definition
01	**TOTAL PLAYS:** Provides the total number of *Regular* and *Tournament Games* played while a *Tournament is active (in progress).* This total is derived by adding Tournament Audit **02**, **TOURNAMENT PLAYS,** with ***Regular Plays.***
02	**TOURNAMENT PLAYS:** Provides the total number of *Tournament Games* played while a *Tournament is active (in progress).*
03	**TOTAL GAME EARNINGS:** Provides the total Gross Earnings *accepted,* while a *Tournament is active (in progress).*
04	**TOTAL TOUR. EARNINGS:** Provides the total Tournament Earnings *(Audit* ***03*** *less Regular Game Earnings)* while a *Tournament is active (in progress).*
05	**JACKPOT (PRIZE POOL TOTAL):** Provides the total Prize Pool *(Jackpot)* Amount to be paid out while a *Tournament is active (in progress).*
06	**NET EARNINGS:** Provides the total Net Earnings *(Gross Earnings less Prize Pool)* while a *Tournament is active (in progress).*

Tournament Audits 07-12 continued on the next page.

	TOURNAMENT AUDIT NAME: Definition

The following Tournament Audits WILL NOT BE RESET if a new Tournament is started. ALL AUDITS can be reset if a Factory Reset is done!

07	**ACCUM. TOTAL PLAYS:** Provides the accumulative total amount of *Regular & Tournament Games* played since the first Tournament was played.
08	**ACCUM. TOUR. PLAYS:** Provides the accumulative total amount of *Tournament Games* played since the first Tournament was played.
09	**ACCUM. EARNINGS:** Provides the total Gross Earnings *accepted,* since the first Tournament was played.
10	**ACCUM. TOUR EARNINGS:** Provides the accumulative total Tournament Game Earnings since the first Tournament was played.
11	**ACCUM. JACKPOT:** Provides the accumulative total of Prize Pool *(Jackpot)* Amounts paid out since the first Tournament was played.
12	**# TOURNAMENTS:** Provides the number of Tournaments *(not individual Tournament Games)* since the first Tournament was played.

Sign Messages A-B (Tournie Adj. 14-15)

To initiate, from the **TOURNAMENT MENU**, select the "A-B TEXT" *Icon* with either the **Red "LEFT"** or **Green "RIGHT" Buttons** and press the **Black "ENTER" Button**. Select and *activate* either of the ">>" *Mini-Icon*s to view the next or previous Tournament Adjustment in this group. Select and *activate* either of the "-" or "+" *Mini-Icons* to change the setting, if desired *(the Default Setting is noted in the definitions below)*. The display will describe the **Tournament Adjustment Number**, **Tournament Adjustment Name** and the **Current Tournament Adjustment Setting**. The current Tournament Adjustment will remain in the display until the next Tournament Adjustment is viewed or when this Menu is exited.

Nr.	TOURNAMENT ADJUSTMENT NAME: Definition
14	**LOCATION MESSAGE:** Set to **ON, CHANGE** or **OFF**. Default is **ON**. When set to **CHANGE**, a new message can be set or the old one can be edited *(select the "+" Mini-Icon to change settings until "CHANGE" appears in the display, then select the ">>" Mini-Icon to access.)*. At the top left corner of the Display, the letter **A** is indicated *(blinking)* in the first available position. Vary the letter(s) by operating the Left and Right Flipper Buttons *(or* **"RED"** *or* **"GREEN" Buttons***)*. With the desired letter indicated, depress the **Start Button** to lock in the letter and advance to the next character. Repeat this procedure until the desired message is completed in the display. Select the "<" or ">" characters to back-space *(erase)* and/or to move forward in an already typed message. After completion, press the **"BLACK" Button**, **"REQUEST INSTALLED"** is indicated and then exits this sub-menu.
15	**PRIZE MESSAGE:** Set to **ON, CHANGE** or **OFF**. Default is **ON**. *Procedure identical to Tournament Adjustment* ***14, Location Message****.*

The ***DEFAULT LOCATION MESSAGE*** is:

STERN PINBALL PROUDLY PRESENTS...

The ***DEFAULT PRIZE MESSAGE*** is:

YOU CAN BE THE NEXT BIG WINNER!

IMPORTANT FOR TOURNAMENT USERS:
2 additional messages can be added by using the **Beta Brite® Remote**. More details in the **ToPS™ Tournament Pinball System Kit Installation Manual** *(SPI Part Number: 780-6011-00)* provided in the ***Optional Tournament Kit*** *(SPI Part Number: 502-5011-00)*.

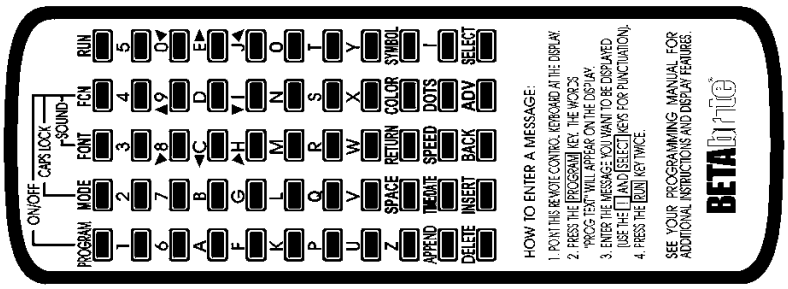

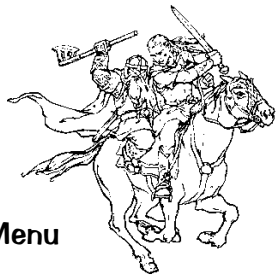

Go To
Tournament Menu

THE LORD OF THE RINGS
LIGHT ALL RINGS FOR RING FRENZY
SHOOT AGAIN
50¢ = ×1
SUPER VALUE
$2.00 = ×5

back to Page 58

Parts Identification & Location (The Pink Pages)

Overview

This section provides the Part Nºs and locations of all the components in this Pinball Machine. The parts are arranged in 3 groups: **BACKBOX**, **CABINET** and **PLAYFIELD**. Generic parts which may change as production continues (quantity and/or size) are listed together. Quantities greater than 0 indicates that the part is used in this game. Since quantity changes *may occur*, an item indicating no quantity *may be used*. Compare the item which needs to be replaced with the drawings provided *(the Posts, Sockets, Bulbs & Rubber Rings are drawn actual size). Major Assemblies & Ramps are detailed in the* ***Blue Pages****, Pages* ***75-98****.*

Important: *Read all "**Take Note:**" items.*

Pinball Location Maint. Kit Available
502-6002-80
This kit consists of 8 oz. Novus Wax #2 Fine (Red) (675-0003-01), cloth and all Rubber Rings & Bulbs used in this Pinball Machine.

Ask your distributor about the Deluxe Pinball Location Maintenance Kit which includes Flipper Rebuild Kits!

Section 4, Table of Contents

Chapter 1: The Pink Pages

Overview 59

BACKBOX:

Lord of the Rings
Backbox Assy. 60
Speaker Panel Assy. for the Backbox & Assoc. Parts: ... 61

CABINET:

Cabinet -General Parts & Switches 62-63

PLAYFIELD:

Playfield - General Parts, Metal Rails/Ball Guides & Switches (Above) 64-65
Playfield - General Parts & Switches (Below) 66
Playfield Plastics (Screened & Clear) & Decals 67
Playfield - Rubber Parts Black 68
Playfield - Metal Posts (Screws) & Nuts 69
Playfield - Hex Spacers 70
Playfield - Posts & Spacers 71
Playfield - Small Bayonet Type Bulbs & Sockets 72
Playfield - Large Bayonet Type Bulb & Sockets 73
Playfield - Wedge Base Bulbs & Sockets 74

Chapter 2: The Blue Pages

Overview 75
Drawings for Major Assemblies & Ramps 76-98

Not sold as an assembly, order the individual part(s) actually required.

The Lord of the Rings Backbox Assembly, 505-6002-80-80 (Items 1-27)

‡ **Item 20, Button Hole Plug (Black)** *is the optional ToPS™ Access Hole; if removing for the Optional ToPS™ Kit, save with the game.*

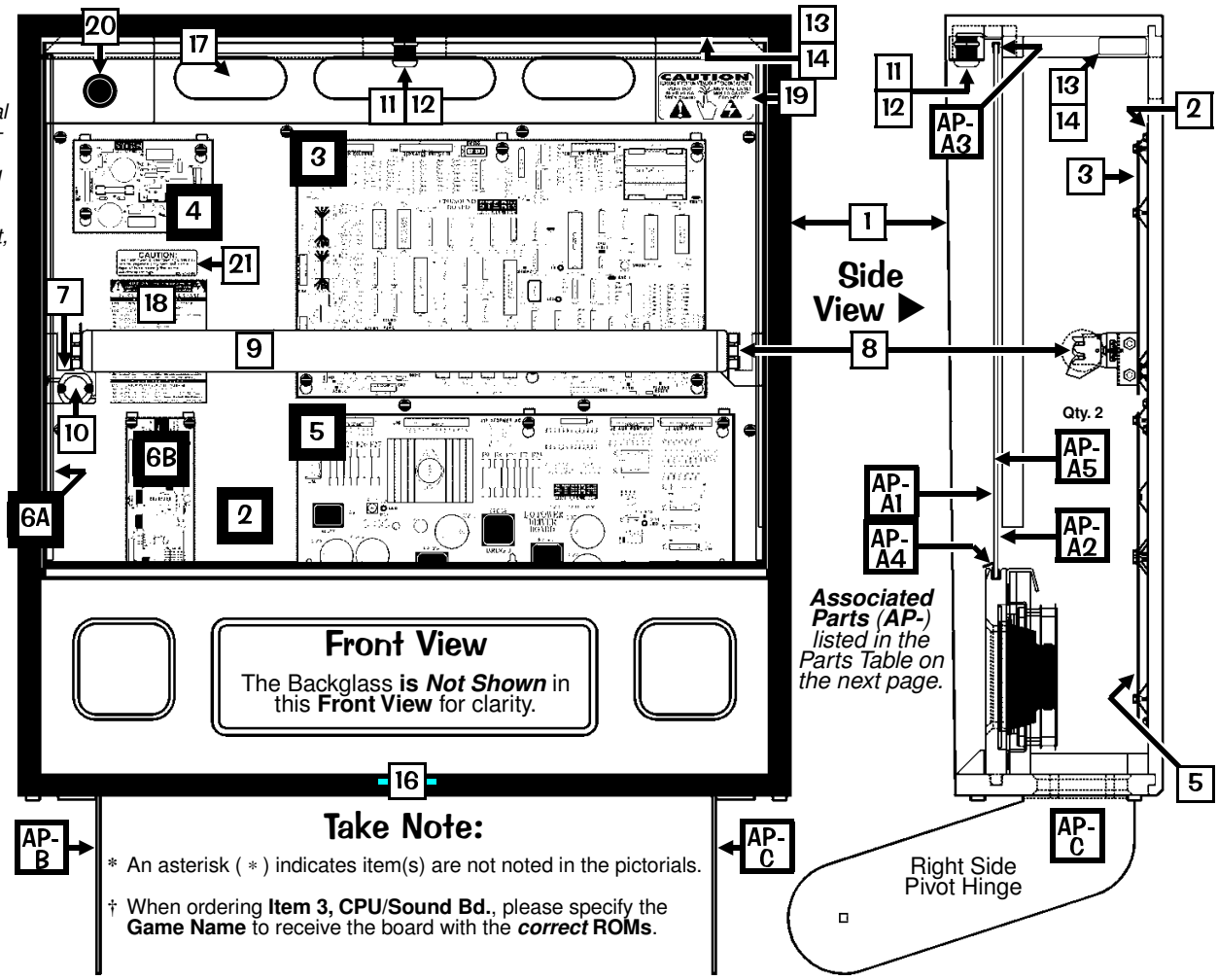

Take Note:

* An asterisk (*) indicates item(s) are not noted in the pictorials.

† When ordering **Item 3, CPU/Sound Bd.**, please specify the **Game Name** to receive the board with the ***correct*** **ROMs**.

Sec. .4: Parts Id. ...

№	BACKBOX PART NAME	QTY.	SPI PART №
1	Backbox **LOTR Screened No Parts**	1	**525-5631-18-80**
	Item 1 Note: *Black & Gold T-Molding is installed and cannot be ordered separately.*		
2	PCB Metal Mounting Plate	1	535-5809-14
	Item 2 is secured to Item 1 by: #8 X 1/2" HWH AB (Zinc) (Qty. 13) (234-5101-00) **and** #10 Washer 7/32" I.D. X .5" O.D. X 1/16" Thick (Qty. 4) (242-5003-00)		
3 †	CPU/Snd. Bd. **w/ATMEL Sound Processor**	1	**520-5300-00**
4	Display Power Supply Board	1	520-5138-00
5	I/O Power Driver Board	1	520-5137-01
	Items 3, 4 & 5 are secured to Item 2 by: #8-32 X 3/8" HWH MS (Qty. 19) (237-5903-00)		
6A	3X Trans. Drvr. Bd. **(UK/Special Apps.Only)**		520-5068-01
6B	Tournament Serial Interface (TSI) Bd. **ToPS™**		520-5220-00
	Item 6A is required for UK Games *to support Auxiliary assemblies listed under the Coil Matrix of Q1-Q32; also used for* ***Special Applications*** *such as Ticket / Coin Dispensers used in conjunction with* ***Item 6B ToPS™ Tournament Serial Board.***		
7	Fluorescent Light Bracket Assy. Left	1	515-6545-00
	For Individual Items use : Fluorescent Light Bracket Left (**535-7739-00**), Lamp Holder** (Self-Locking) (**077-5214-00**) **and** Starter Base *(with Leads)**** (**077-5213-00**).		
8	Fluorescent Light Bracket Assy. Right	1	515-6545-01
	For Individual Items use : Fluorescent Light Bracket Right (**535-7739-01**), Lamp Holder** (Self-Locking) (**077-5214-00**) **and** Starter Base *(with Leads)**** (**077-5213-00**). ** **secured by:** #6-32 X 5/8" PPH MS (Sems) Zinc (Qty. 1) (232-5203-00) *** **secured by:** #4-40 X 1/2" PPH MS (Sems) Zinc (Qty. 2) (237-5813-00)		
	Items 7 & 8 are secured to Item 1 by: #10-24 X 1-1/4" Carriage Bolt Sq. Neck (Qty. 2/per) (231-5012-00), #10-24 Keps Nut (Qty. 2/per) (240-5207-00) **and** 3/4" X 3" Reinforced Strapping Tape (Qty. 1, Sold in 12" Lengths only) (626-5040-00)		
9	Fluorescent Tube 24" (F18T8CW)	1	165-5061-00
10	Starter - Fluorescent (FS2 Light)	1	165-5011-01
11	Lock Mounting Plate	1	535-8128-01
12	Lock 5/8" Barrel, 3/4"ø, 1.5" Flat Cam	1	355-5055-00
	Items 11-12 are secured by: #8 X 5/8" TP Torx T20 (Qty. 4) (237-5947-00)		

№	BACKBOX PART NAME	QTY.	SPI PART №
13	Ballast Mounting Plate	1	535-8657-00
14	Ballast *CU45Z-W 1/2" Core 120v 60 Hz 13W*	1	010-5015-00
	Ballast, EU / UK Only 5/8" Core 50/60 Hz		010-5015-01
	Items 13 & 14 are secured to Item 1 by: #6 X 5/8" HWH AB (Zinc) (Qty. 2) (234-5102-04)		
15*	*#1 Roto Lock Male (on Cabinet)*	*1*	*355-5006-01*
16	#1 Roto Lock Female (R2-0002-02)	1	355-5006-02
	Item 16 is secured by: #10-24 X 1-3/4" CBSN (Qty. 2) (231-5022-00), #10-24 Keps Nut (Qty. 2) (240-5207-00) **and** #10 Washer 7/32" ID X .5" OD X 1/16" (Qty. 2) (242-5003-00)		
17	Back Vent Grill 2-1/2" X 18"	1	545-5072-02
	Item 17 is secured by: Staple 5/16" (Qty. 24) (631-5000-00)		
18	Fuse Description Decal (Generic)	1	820-6152-01
19	"CAUTION - VERY HOT" Decal	1	820-6266-00
20‡	Button Hole Plug (Blk) **(Happ #52-6214-00)**	1	500-6566-00
21	Fuse Label (UL)	1	820-6143-00
22*	Backbox Date Label	1	820-5091-00
23*	Ribbon Cable, 20-Pin (4")	1	036-5000-04
	Item 23 (20-Pin) connects the *CPU/Sound Board to the I/O Power Driver Board.*		
24*	Ribbon Cable, 26-Pin (40")	1	036-5001-40
	Item 24 (26-Pin) connects *the CPU/Sound Board to the Display Controller Board.*		
25*	1/4" Clamp (Double)	2	040-5000-23
26*	1/2", 3/4" & 1" Clamp (Single)	9	040-5000-XX
	Items 25-26 are secured to Item 1 by: #8 X 1/2" HWH AB (Zinc) (Qty. 13) (234-5101-00) ***-XX Note:*** for **1/2"** use **-06** (Qty. 1); for **3/4"** use **-08** (Qty. 2); for **1"** use **-09** (Qty. 6)		
27*	Ground Strap (5") *(by Item 12)*	1	600-5006-05

Not sold as an assembly, order the individual part(s) actually required.

The Lord of the Rings Speaker Panel Assy. for the Backbox, 515-6888-03 (Items 1-15) and Assoc. Parts: Backglass Assembly & Pivot Hinges (Left & Right) (Items AP-A - AP-C)

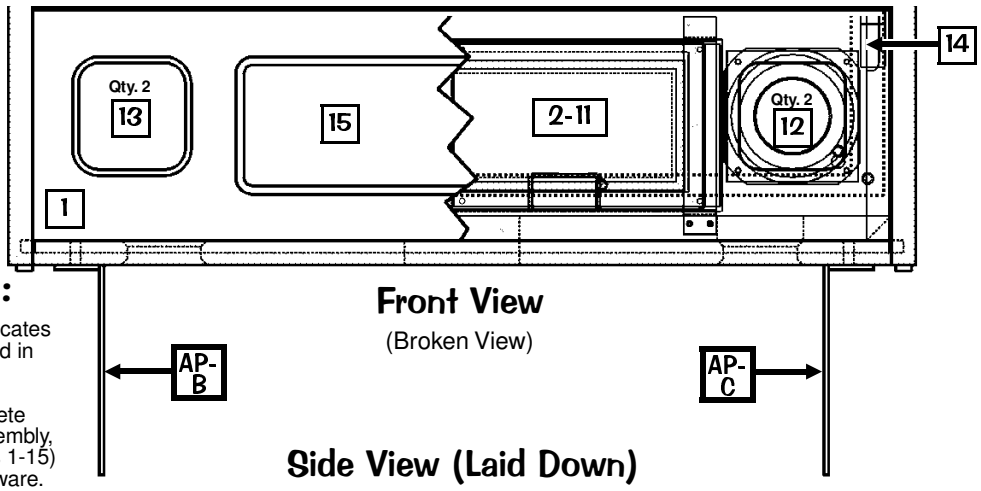

Take Note:

* An asterisk (*) indicates item(s) are not noted in the pictorials.

1. Ordering the complete Speaker Panel Assembly, 515-6888-03 (Items 1-15) will include all hardware.

Front View
(Broken View)

Side View (Laid Down)

For clarity, the below drawing ***does not show*** the speaker(s).

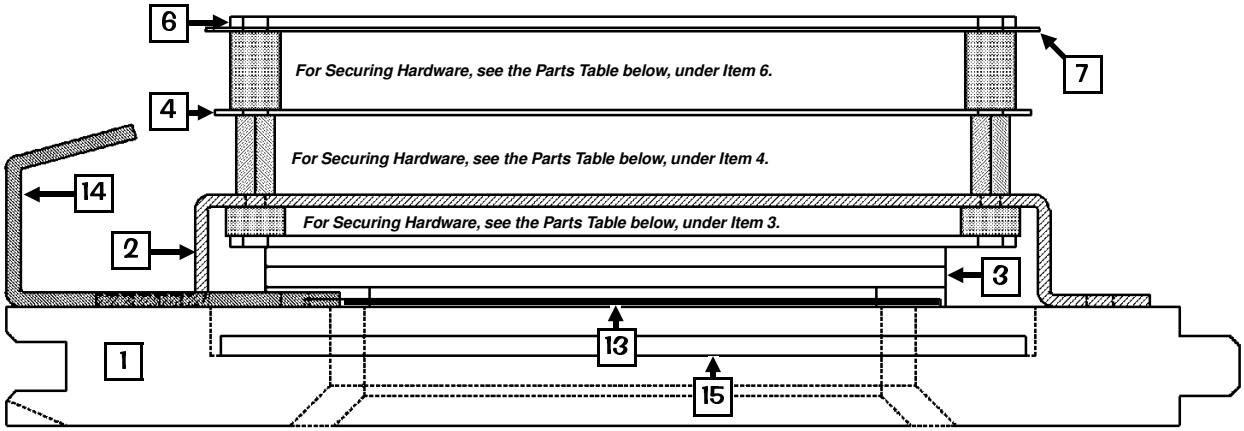

№	SPEAKER PANEL PART NAME	QTY.	SPI PART №
1	Speaker Panel (Black Wood)	1	525-5515-00
2	Dot Matrix Disp. Bd. Mounting Bracket	2	535-8368-01
	Item 2 is secured to Item 1 by: #8 X 3/4" HWH AB (Zinc) (Qty. 4/per) (234-5103-00)		
3	Dot Matrix Display Board 128 X 32	1	520-5052-00
	Item 3 is secured to Item 2 by (at corners): 3/16" X 3/8" Spacer Gray (Qty. 4) (254-5000-18) **and** #6-32 X 1/2" HWH Swage (Serr) Zinc (Qty. 4) (237-5976-03) **Item 3 is secured to Item 4 (at the top center) by:** 3/4" X 1/4" Hex Spacer #6-32 Tap (Qty. 1) (254-5008-04) **and** #6-32 X 1/4" PPH MS (Sems) Zinc (Qty. 1) (232-5200-00)		
4	Static Shield (Steel Plate)	1	535-6437-00
	Item 4 is secured to Item 2 by: 1/2" X 1/4" Hex Spacer #6-32 Tap (Qty. 4) (254-5008-03) **and** #6-32 X 1/2" PPH MS (Sems) Zinc (Qty. 2, on Left Side only) (232-5202-00)		
5*	Edge Protector (on Item 4)	2	545-5592-01
6	Display Controller Board FCC-FEB98	1	520-5055-03
	Item 6 is secured to Item 4 by: 1/2" X 5/16" X .144 ID Spacer Tap (Qty. 3) (254-5014-00), #6-32 X 3/4" PPH MS (Sems) Zinc (Qty. 3) (237-5504-00), 1/2" X 1/4" Hex Spacer #6-32 Tap. (Qty. 1) (254-5008-03) **and** #6-32 X 1/4" PPH MS (Sems) Zinc (Qty. 2) (232-5200-00)		
7	RF Shield	1	820-5092-00
	Item 7 is secured inbetween: "Item 6" and its' mounting hardware described.		
8*	Ground Strap (25") (on Items 4, 6, 12)	4	600-5006-25
9*	1/2" Clamp (Single) (on Item 4)	1	040-5000-06
10*	Ribbon Cable, 14-Pin	1	036-5260-00
	Item 10 Note: *The 14-Pin cable connects the Dot Matrix Disp. Bd. to the Disp. Controller Bd.*		
11*	Foam 3/16" Thk. X 1/4" X 36"	6	626-5026-00
	Above Item 11 is self-adhesive. *Located between Items 3 & 17. Sold in 12" Lengths only.*		
12	Speaker (Shld.) 4" 8Ω MG Elec #4060SH	2	031-5004-01
13	Speaker Grill (Black w/no Artwork)	2	535-8081-01

№	INDIVIDUAL PART NAME	QTY.	SPI PART №
14	Speaker Panel Hook Bracket	2	535-7009-02
	Items 12, 13 & 14 are secured by: #8 X 3/4" HWH AB (Zinc) (**Items 12/13:** Qty. 4/per; **Item 14:** Qty. 2/per) (234-5103-00)		
15	Plastic Shield (Display Cover)	1	545-5884-00
	Item 15 is secured to Item 2 by: #6 X 3/8" HWH AB (Zinc) (Qty. 8) (234-5000-00)		

The Associated Parts AP-A thru AP-C are also noted in the Backbox Assembly drawings on the previous page.

ASSOC. PARTS **ARE NOT INCLUDED** WITH BACKBOX/SPKR. PANEL ASSY'S.

№	ASSOC. BACKBOX PART NAME	QTY.	SPI PART №
AP-A	Backglass Assembly (Game № 80)	1	*See Parts Below*
	ORDER ONLY INDIVIDUAL PART(S) NEEDED:		
AP-A1	Clear Backglass 25.906" X 19.187"	1	660-5038-02
AP-A2	**LOTR Film Art (#80)**	1	**830-5280-00**
AP-A3	Top Plastic Channel - 26"	1	545-5018-15
AP-A4	Bottom Plastic Lift Channel - 26-1/16"	1	545-5021-01
AP-A5	Plastic Edging (Left/Right) - 18-1/8"	2	545-5018-14
AP-A6*	Tape (double-sided) (12" Length)	1	626-5005-00
	Note: AP-A6 secures AP-A3--A5 to AP-A1		*(only 6" required)*
AP-B	Pivot Hinge Left	1	535-7999-00
AP-C	Pivot Hinge Right	1	535-7999-01
	Items AP-B & AP-C are secured to Backbox by: 1/4"-20 X 1-1/4" C.B. Sq. Neck (Qty. 4) (231-5003-00), 1/4"-20 Flange Nut (Qty. 4) (240-5300-00) **and** Fend Washer 1/4" I.D. X 1" O.D. (Qty. 1) (242-5009-00) **Items AP-B & AP-C are secured to Cabinet by:** 1/4"-20 X 7/8" Carriage Bolt Sq. Neck (Qty. 2) (231-5014-00), Hinge Spacer (Qty. 2) (530-5099-00), Washer 1/4" I.D. X 7/8" O.D. X 1/8" Yellow (Qty. 1/per) (242-5016-01), Fend Washer 1/4" I.D. X 1" O.D. (Qty. 1/per) (242-5009-00) **and** 1/4"-20 Flange Nut (Qty. 1/per) (240-5300-00)		

Cabinet - General Parts ■ & Switches □

Enlarged View of Item 19 inside the Coin Door, Item 17. Buttons, Bracket & Decal sold separately. For usage, see Section 3, Chapter 1, Portals Service Menu Introduction, Page 8.

Item 32J (On/Off Switch) is located under the Cabinet (Front Right) directly below the Power Box.

32J

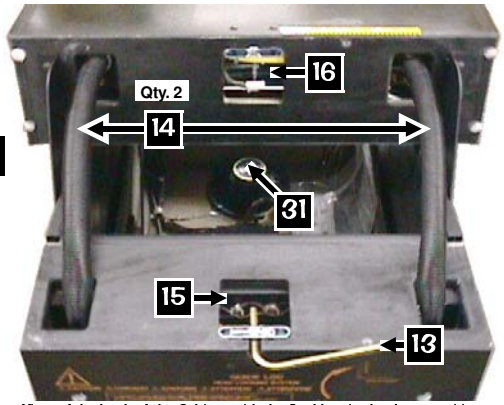

View of the back of the Cabinet with the Backbox in the down position.

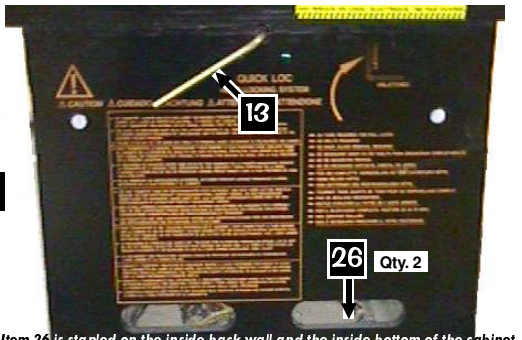

Item 26 is stapled on the inside back wall and the inside bottom of the cabinet.

Take Note:

‡ **Item 11**, **Button Hole Plug (Black)** is the *Optional* Tournie Button Access Hole. *If removing for the Optional Tournament Button, save with the game.*

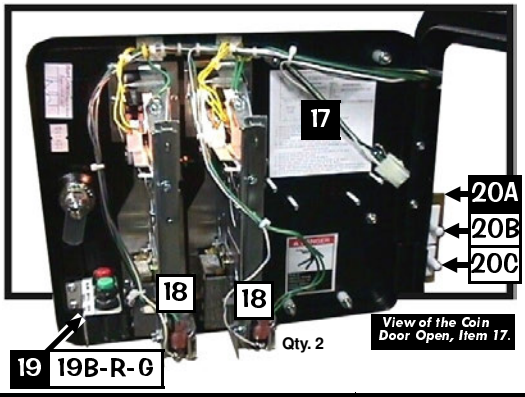

View of the Coin Door Open, Item 17.

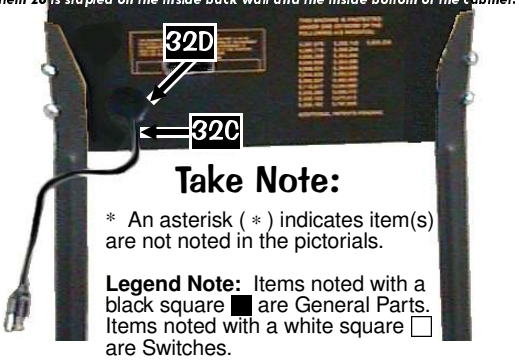

Take Note:

* An asterisk (*) indicates item(s) are not noted in the pictorials.

Legend Note: Items noted with a black square ■ are General Parts. Items noted with a white square □ are Switches.

№	CABINET PART NAME	QTY.	SPI PART №
1	**LOTR** Screened Cabinet (No Parts)		525-5395-15P-80
2	Black Leg & Leveler Assembly	4	500-5921-50
	Item 2 is secured by: Leg Bolt Back Plate (535-5703-00) **and** Leg Bolt 3/8" X 16 X 2-1/2" Hex 5/8" Hd. (2/per) (231-5001-01) *To order just a Leg Leveler (3/8" - 16 X 3") use SPI Nº: 500-5017-00. A Leg "without" a Leg Leveler is not available.*		
3	Start Button (Red) + Lamp Assembly	1	500-6388-02
	Item 3 includes the Switch.* FOR SWITCH ONLY *see Item 25 on the Next Page.		
4*	#555 Wedge Base Bulb (Clear)	1	165-5002-00
	Item 4 is included with Item 3, for just a replacement Bulb use the above number.		
5	Ball Shooter (Plunger) Assembly	1	500-6146-00-07
	Item 5 is secured by: Support Plate (Qty. 1) (535-5027-00), #10-32 X 3/8" SHWH (Serr) Swage (Qty. 3) (237-5985-00) **and** #6 X 5/8" HWH AB (Zinc) (Qty. 2) (234-5002-00).		
	IFOR A BREAKDOWN OF PARTS SEE THE BLUE PAGES: ***Sec. 4, Chp. 2, Page 76.***		
6	Flipper Button (Red) Assembly	2	500-5026-32
	Item 6 is secured by: Pal Nut for Flipper Button (Metal) (Qty. 2) (240-5003-01) **and is fitted with:** O-Ring 11/32" X 7/32" X 1/16" (Qty. 1/per) (545-5850-00) **Item 6** ***DOES NOT*** **include the Switch. FOR SWITCHES ONLY** ***see Items 23A/B on the Next Page.***		
7	Rear Glass Channel 20-3/8" Length	1	545-5038-00
8	Plastic Channel 42-5/8" Lg. (Left/Rt.)	2	545-5017-00
9	Side Armor "with holes" (Left & Right)	2	535-7297-02
	Item 9 is secured by: Pem Stud 1/4 X 1" FH (Qty. 2/per) (237-6116-01), 1/4-20 Flange Nut (Qty. 2/per) (240-5300-00) **and** #8 X 5/8" T20 Tamper Proof (Qty. 2/per) (237-5947-00)		
10	Front Molding - Black	1	500-5757-02-00
	Item 10 requires: Self-Adhesive Foam Rubber 3/8" X 3/16" X 20-3/8" (626-5001-00).		
11‡	Button Hole Plug (Blk) **(Happ #52-6214-00)**	1	500-6566-00
12	P/F Glass (Tmprd.) 21" X 43" X 3/16"	1	660-5001-00

№	CABINET PART NAME	QTY.	SPI PART №
13	Hex Key Allen Wrench 5/16"	1	777-0001-00
14	Corrugated Tubing Black 1¼"ø X 2.6' Lg.	2	605-5008-00
	*Above Item **14** covers the Cables Wiring Harnesses going into the Backbox from the Cab.*		
15	#1 Roto Lock Male (R2-0055-02)	1	355-5006-01
	Item 15 is secured by: #10-24 X 1-3/4" Carr. Bolt Sq. Neck (Qty. 2) (231-5022-00), #10-24 Nylon Stop Nut (Qty. 2) (240-5206-00) **and** #10 Washer 7/32" X .5" X 1/16" (Qty. 2) (242-5003-00)		
16	*#1 Roto Lock Female (on Backbox)*	*1*	*355-5006-02*
17	Coin Door (with Validator) USA only	1	500-5018-172
	Item 17 is secured by: 1/4"-20 X 1-1/4" Carriage Bolt Sq. Neck (Qty. 4) (231-5003-00) 1/4"-20 Flange Nut (Qty. 4) (240-5300-00) **and** Fend Washer 1/4" I.D. X 1" O.D. (Qty. 3) (242-5009-00) ***Note:*** *For Coin Door other than USA call Technical Support for SPI Part Nº.*		
18	Coin Door Sw. (USA) (Happ Control)	2	180-5024-**01**
	FYI: Coin Dr. Sw. (USA) (Coin Control)	0	180-5024-00
	FYI: Coin Door Switch (¥ Japan)	0	180-5091-00
19	Bracket for below Portals™ Switches	1	535-6860-03
19B	Push-Button Portals™ Switch (Black)	1	180-5192-00
19R	Push-Button Portals™ Switch (Red)	1	180-5192-02
19G	Push-Button Portals™ Switch (Green)	1	180-5192-04
	Ordering Note: *Securing hardware for switches included. For Decal Kit, see Page **63**.*		
20	Dual Switch Assembly	1	500-5808-00
	ORDERING ABOVE (ITEM 20) ASSEMBLY PART Nº WILL INCLUDE:		
20A	Mounting Bracket	1	535-6958-00
20B	Playfield Power Interlock Sw. (Top)	1	180-5136-00
20C	Memory Protect Switch (Bottom)	1	180-5000-01
	Item 20 is secured to Cabinet by: #8 X 1/2" HWH AB (Zinc) (Qty. 2) (234-5101-00)		

Parts Table & Views continue on the next page.

Cabinet Back Lights are located on the Wood Back Panel:

See the Blue Pages, Section 4, Chapter 2, Drawings for Major Assemblies ... , Pages 94-95.

For General Bulbs & Sockets:

See these Pink Pages, Section 4, Chapter 1, Parts Identification & Location, Pages 72-74

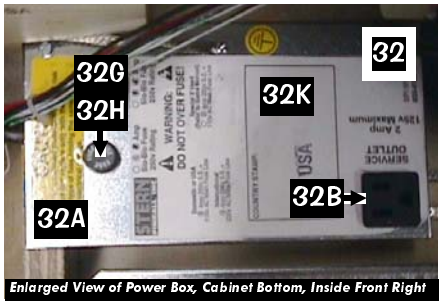

Enlarged View of Power Box, Cabinet Bottom, Inside Front Right

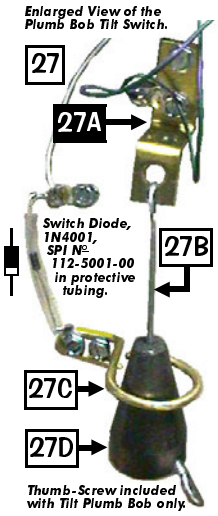

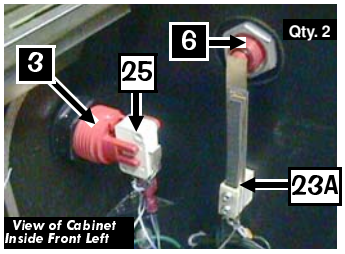

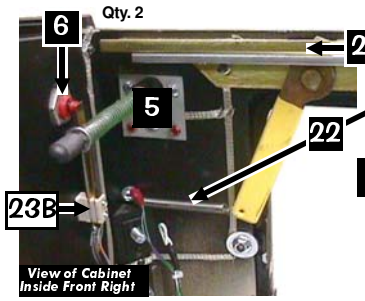

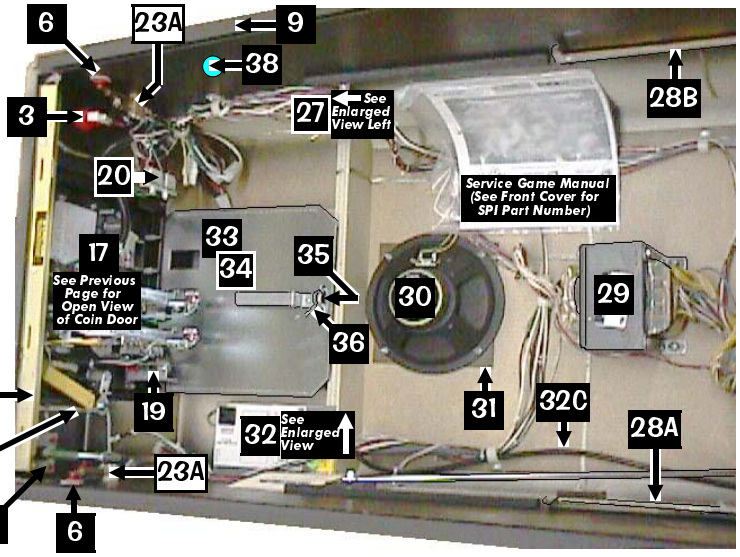

Take Note:

* An asterisk (*) indicates item(s) are not noted in the pictorials.

Legend Note: Items noted with a black square ■ are General Parts. Items noted with a white square □ are Switches.

№	INDIVIDUAL PART NAME	QTY.	SPI PART №
Parts Table & Views continue on the previous page.			
21	Front Molding Lockdown Assembly	1	500-6509-00
Item 21 is secured by: #10-24 X 1-1/4" Carr. Bolt (Qty. 2) (231-5012-00), #10-24 Keps Nut (Qty. 2) (240-5207-00), #8 X 5/8" HWH AB Zinc (Qty. 4) (234-5102-04) **and** #10 Washer 7/32" ID X 1/2" OD X 1/16" (Qty. 2) (242-5003-00)			
22	Lockdown Spring (connected to handle)	1	265-5008-00
23A	Flipper Switch - **Self-Cleaning**	**2**	180-5160-00
23B	Flipper Sw. - **X2 Stack for Lwr./Upr. Flipper(s)**	**0**	180-5164-00
24*	Foam Strip (2 on 23A; 1 on 23B)	3	626-5042-00
25	Start Button Switch **(ONLY)**	1	180-5174-00
26	Grills 2-1/2" X 18" (on Back & Bottom)	2	545-5072-02
27	Cabinet Plumb Bob Tilt Switch	1	*See Parts Below*
ORDER ONLY INDIVIDUAL PART(S) NEEDED:			
27A	Bracket for Hanger Wire	1	535-5221-00
27B	Hanger Wire	1	535-5319-00
27C	Contact Wire Form	1	535-7563-01
27D	Plumb Bob Weight (includes Thumb-Screw)	1	535-5029-00
Items 27A & 27C are secured by: #8 X 1/2" HWH AB (Zinc) (Qty. 4) (234-5101-00)			
28A	Slide & Pivot Support Bracket - Right	1	535-5990-00
28B	Slide & Pivot Support Bracket - Left	1	535-5989-00
Items 28A & 28B are secured by: #10-24 X 1-1/4" Carriage Bolt Sq. Neck (3/per) (231-5012-00) **and** #10-24 KEPS Nut (3/per) (240-5207-00)			
29	Transformer 5.7v AC (with Ballast Winding)	1	010-5012-01
Item 29 is secured by: 1/4"-20 X 5/8" PPH MS (Zinc) (Qty. 4) (237-5854-00) **and** 1/4" Split Lock Washer (Qty. 4) (244-5000-00)			
30	Speaker 8" ø Rd. 8010 4Ω	1	031-5007-00

№	INDIVIDUAL PART NAME	QTY.	SPI PART №
31	Speaker Grill 7" X 7"	1	545-5072-03
Items 30 & 31 are secured by: #6-32 X 1-1/4" Fin Shank Screw (Qty. 4) (237-5883-00) **and** #6-32 Keps Nut (Qty. 4) (240-5008-00)			
32	Power Input Box Sub-Assy.	1	515-5360-07
ORDERING ABOVE (ITEM 32) SUB-ASSY. PART № WILL INCLUDE:			
32A	Power Box (Plain)	1	535-5932-00
32B	Service Outlet (for USA)	1	180-5008-01
32C	Line Cord 10' ROJ 3" Max.	1	034-5000-10
32D	Recessed Cup for Line Cord	1	545-5122-00
32E*	Line Filter	1	150-5000-00
32F*	Varistor TNR159211KM	1	150-5001-00
32G	Fuse 8 Amp 250v Slo-Blo (Domestic)	1	200-5000-05
32H	Fuse Holder	1	205-5001-00
32I*	On/Off Switch Bracket	1	535-8318-00
32J	On/Off Rocker Sw. (APEM R2101C5NBB)	1	180-5001-03
32K	Power Box Decal	1	820-6123-03
33	Cash Box Plastic Bottom	1	545-5090-00
34	Cash Box Cover (Validator)	1	535-5013-03
35	Cash Box Lock Bracket (wire)	1	535-7562-00
36	Large Hair-Pin Clip	1	535-7772-00
37	Bracket *(to position playfield in cabinet.)*	1	535-7354-00
38*	Optional Meter **(+12v DC w/Diode & Bracket)**		**G-0053-013-102**
	Optional Meter **(+12v DC w/Diode, No Bracket)**		**G-0053-013-102A**

Pinball Location Maintenance Kit Available: 502-6002-80
This kit consists of 8 oz. Novus Wax #2 Fine (Red) (675-0003-01), cloth and all Rubber Rings & Bulbs used in this Pinball Machine.

№	ABOVE PLAYFIELD PART NAME	QTY.	SPI PART №
PF	P/F Screened w/ Inserts & **NO** Parts	1	830-5100-80
	P/F Complete w/ Inserts & **ALL** Parts	1	505-6004-80-80

General Items

1	Arch (Black Metal) for **LOTR**	1	535-8392-01

Item 1 is secured to the playfield by Item 12 and: #10-32 X 5/16" PH FL U/C MS STL Zinc (Qty. 2) (237-6013-00). ***Usage Note:*** *When replacing the Arch,* order new replacement **Nelson Protect Strips** *(not included)* (Qty. 2) (545-5212-02).

2	Instruction Card (USA) **LOTR**	1	755-5180-00

Note: *Visit* ***www.sternpinball.com*** *for a PDF copy of the Game Instruction Card which will also have any translated Instruction Cards made for this game. Find Game Link or Archives.* ***Spanish*** *755-5179-**02**;* ***German*** *755-5179-**03**;* ***Italian*** *755-5179-**04**;* ***French*** *755-5179-**05**.*

3a	Coin Card (2-Sided)	1	755-5400-00

Usage Notes: *Use* ***Item 3a*** *(**Back: 1 Play 50¢ - 5 Plays $2**) for Adj. 6, Game Pricing,* ***USA 5*** *Setting, or (**Front: 1 Play 50¢ - 3 Plays $1**) for Adj. 6, Game Pricing,* ***USA 8*** *Setting.*

3b	Coin Card (2-Sided)	1	755-5400-02

Usage Notes: *Use* ***Item 3b*** *(**Front: 1 Play 50¢**) for Adj. 6, Game Pricing,* ***USA 2-7*** *Setting, (**Back: is Blank**) for Custom Settings.* ***Availability:*** *See* ***Appendix J*** *(back of manual) for all current Coin Cards (**USA**, **Canada**, **Euro** & other **International**). If this is a non-US Game, Coin Card(s) provided will differ.*

4	Rubber Lite Cover Red	1	545-5014-02
5	Light Reflector (Silver Color Plastic)	2	545-5409-01
6a	Mini-Mars Lite Cover **(Snap-In)** Yellow	2	550-5030-06
6b	Mini-Mars Lite Cover **(Snap-In)** Red	3	550-5030-02
7	Level Assembly	1	515-7214-00

For Individual Items use : .882" 8MM **Vial Mtg. Flange** (545-6027-00), **Level** .8mm Empire #0224 (545-6001-01) or **Level Bracket** (535-9010-00). **Flange secured by:** #6-32 X 1/4" PPH MS (no Sems) Zinc (237-5500-00) **and** #6-32 Keps Nut (240-5008-00)
Item 10 is secured to the Wood Rail by: #6 X 1/2" HWH AB Zc Red (Qty. 2) (234-5001-02)

8	Pinball (Steel) 1 1/16" ø	4	260-5000-00
n/a	Plug-Cap (3/16") Black Plastic	**0**	545-5232-01

Note: *Plug-Cap should plug hole if a Center Post (@ Drain) is used, then removed.*

Brackets with Wire Gates

9	1-Way Gate Mounting Bracket	1	535-9339-01
	Wire Gate (for above)	1	535-9340-00
10	1-Way Gate Mounting Bracket	1	535-9171-01
	Wire Gate (for above)	1	535-9403-00

Brackets for Mounting

11	Playfield Hanger Bracket	2	535-8385-00

Item 11 is secured to the P/F by: #8-32 X 7/8" HWH MS Zinc (Qty. 2/per) (237-5890-00)

12	Arch Retaining (Hold-Down) Brackets	2	535-8394-00

Item 12 is secured to the P/F by: #8 X 1/2" HWH AB (Zinc) (Qty. 3/per) (234-5101-00)

13	Bracket, Pad (Blue Rubber) Mount	1	535-9366-00

Item 13 is secured to Item 25 by: #4-40 X 5/16" PFH Under Cut (Qty. 1) (237-6151-00)

14	Bracket, Crystal Ball Mount	1	535-9381-00
15	Bracket, Ramp Mounting	6	515-6508-00

Item 15 is secured by: #6 X 1/2" PTH A (Zinc) (Qty. 2/per) (237-5809-00)

Brackets for Ball Stops, Traps or Protect

16	Snubber Wire 3⅛" *(below Flippers)*	2	535-5373-01
17	Bracket, P/F Protect VUK Hole Edge	1	535-9399-00

Item 17 is secured by: #8 X 1/2" HWH AB (Zinc) (Qty. 1) (234-5101-00)

18	Bracket, Gold **(under Wire Ramp, Plastic -14)**	1	535-9401-00

Item 18 is secured by: #6-32 X 3/8" PPH (Qty. 2) (232-5201-00) **and** #6-32 Nylon Stop Nut (Qty. 2) (240-5005-00)

19	Bracket, Snubber VUK Ball Stop	1	535-8250-00

Item 19 is secured by: #8 X 1/2" HWH AB (Zinc) (Qty. 2) (234-5101-00)

Wood Back Panel & Wood Rails

20	Back Panel **(Plain, No Parts)**	1	525-5636-00
21	Wood Rail **(Left)** 38"	1	525-5007-03
22	Wood Rail **(Right)** 40½"	1	525-5007-16

Items 21 & 22 are secured by: #6 X 1¼" PFH A Zinc (Qty. 5/per) (237-5804-00)

Metal Flat Rails, Wire Forms & Ball Guides

23	Metal Rail **(Center Drain under Arch)**	1	535-8393-00
24	Metal Rail **(#1, Left)**	1	535-9280-00
25	Metal Rail **(#2, Inner Left, with Blue Rubber)**	1	535-9281-00
26	Metal Rail **(Inner Left Short)**	1	535-9283-00
27	Metal Rail **(Short Curve)** *(Welded Asm.)*	1	515-7331-00
28	Metal Rail **(#5, Left of Top Lanes)**	1	535-9284-00
29	Metal Rail **(#3, Right)**	1	535-9282-00
30	Metal Rail *(Welded Assembly)*	1	515-7332-00

Items 23-30 are secured at Pem Studs by: #8 Washer (Qty. 1/per) (242-5005-00), #8-32 Nylon Stop Nut (Qty. 1/per) (240-5102-00) **and/or** #8 X 1/2" HWH AB (Zinc) (Qty. 1/per tab where required) (234-5101-00)

31	Wire Form **(on Plastic Ball Guide, Item 35)**	2	535-5642-00
32	Ball Guide Rail (.12" ø) 2.75"	1	535-5356-15
33	Ball Guide Rail (.12" ø) **(#4 Right)**	1	535-9285-00
34	Ball Guide Rail (.12" ø) 1.5"	1	535-5356-20
35	Ball Guide **(Plastic, Long Clear)**	2	550-5037-01

Miscellaneous

36	Pad *(Blue Rubber)*	1	626-5057-00

Item 36 is secured to Item 25 by: #4-40 X 5/16" PFH U-Cut (Qty. 1) (237-6151-00)

37	Crystal Ball *(Drilled)* 1¼" ø **(#AF1370108)**	1	**515-7344-00R**
	Crystal Ball (Non-Drilled)		*545-6091-02*
38	Balrog ***(Plain, No Parts)***	1	545-5083-00

Item 38 Note: For Associated Parts & better views, see The Blue Pages (Pg. 87).

39	Barad-dûr Tower ***(Plain, No Parts)***	1	545-5082-00

Item 39 Note: For Associated Parts & better views, see The Blue Pages (Pg. 89).

40	Saruman	1	880-5080-00
41	Gandalf The White ***(riding Shadowfax)***	1	880-5076-00
42	Uruk-Hai Warrior ***(no helmet, carrying head)***	1	880-5068-00
43	Ringwraith	1	880-5064-00
44	Aragorn ***(with Torch, riding horse)***	1	880-5075-00
45	Uruk-Hai Warrior ***(with helmet on)***	1	880-5070-00
46	Uruk-Hai Mauhur ***(no helmet)***	1	880-5069-00
47	Frodo	1	880-5072-00
48	Gollum	1	880-5063-00
49	Samwise	1	880-5073-00
50	Pippin	1	880-5071-00
51	Merry	1	880-5078-00

Items 40-51 Note: For better views, see The Blue Pages (Pg. 90).

Switches

A	Micro Switch (Roll-Under Gate)	2	180-5190-28

Switch has a Diode (1N4004) (112-5003-00). *Can be replaced with (1N4001) (112-5001-00).*

Items A requires a Switch Body Protect Plate (Qty. 1/per) (535-6539-00) & is secured by: #2-56 X 1/2" HWH Sr (Qty. 2/per) (237-5937-02)

Pinball Location Maintenance Kit Available: 502-6002-80
This kit consists of 8 oz. Novus Wax #2 Fine (Red) (675-0003-01), cloth and all Rubber Rings & Bulbs used in this Pinball Machine.

Ask your distributor about the Deluxe Pinball Location Maintenance Kit which includes Flipper Rebuild Kits!

For Assemblies, Ramps, Switches on Assemblies, Back Panel Parts and other Individual Parts, not listed on this page, view the Blue Pages (75-98).

Playfield - General Parts ■, ...Rails... ■ & Switches □ (Above) Continued

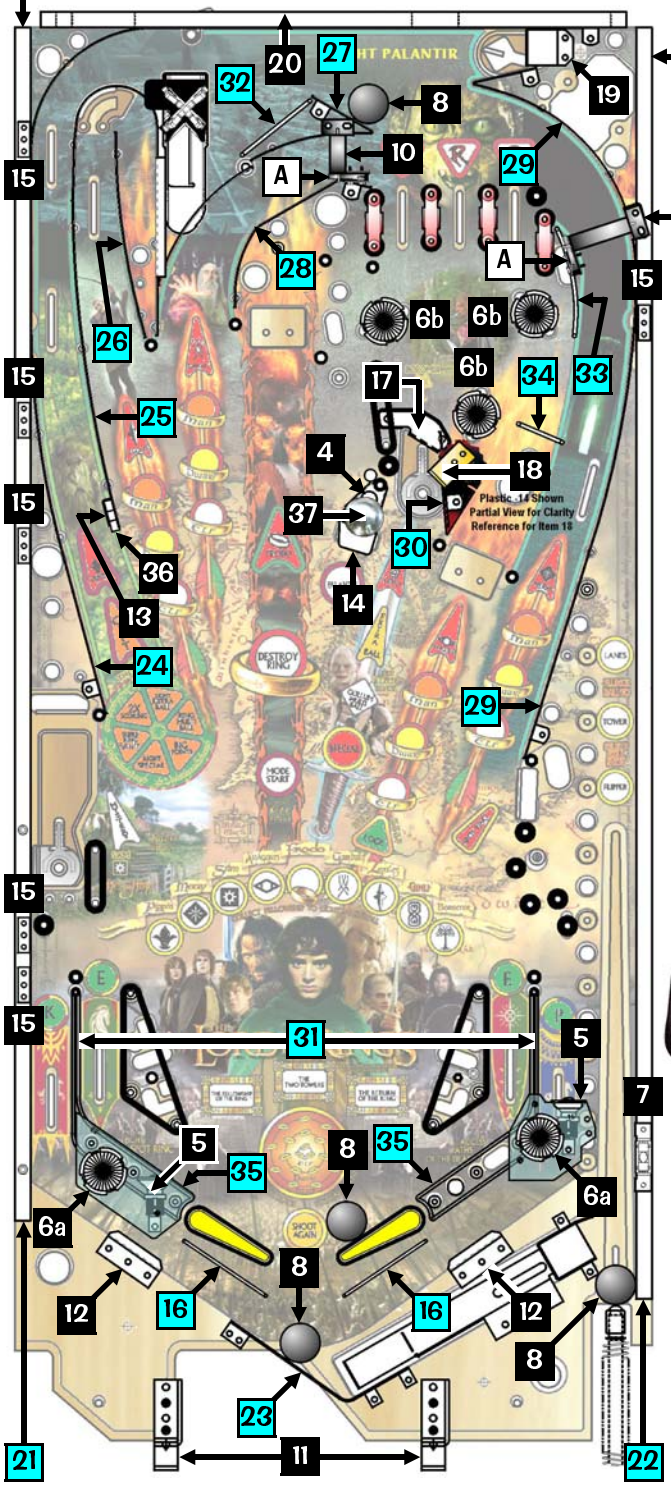

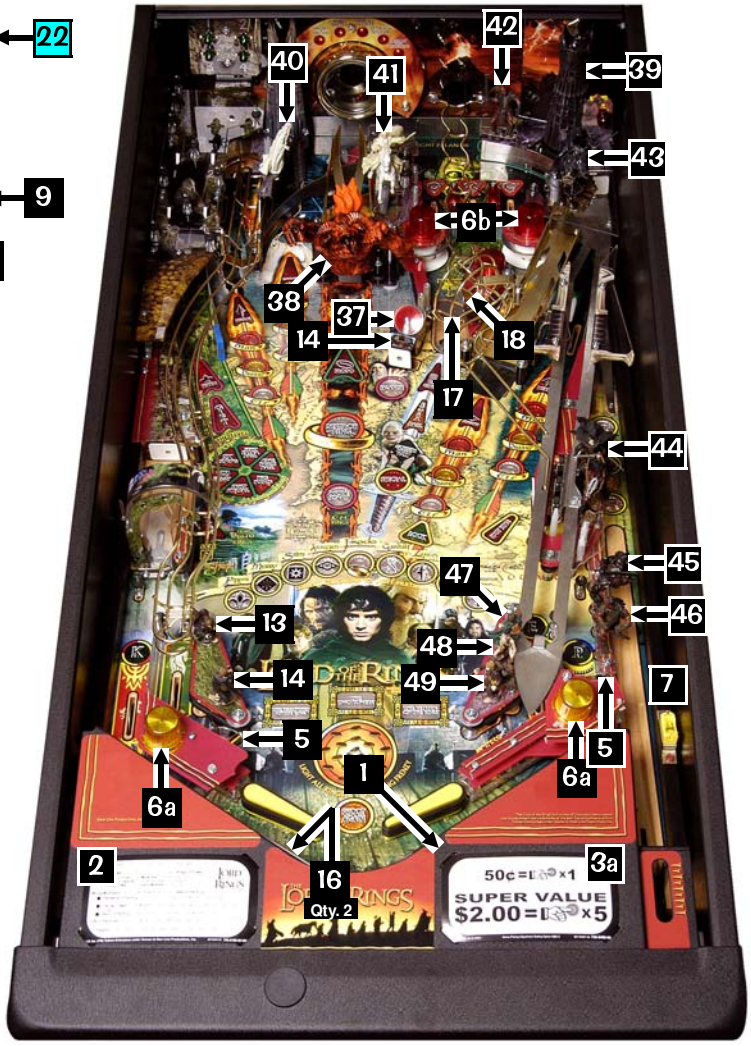

See Appendix J at the back of this manual for all current Cards (USA, Canada, Euro & International) available through your distributor or download via our website (see back of manual cover).

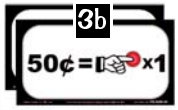

Items 38-51 Not Shown in above view for clarity. For locations see photo above right and for better views, see the Blue Pages, (Pg. 90).

Take Note:

1. Some items or parts *may be included with* **or** *associated with* a Major Assembly or Ramp Assembly; **see the Blue Pages, Sec. 4, Chp. 2**. for parts required not appearing on this page. If you still cannot find the part required, Call Stern® Pinball, Inc. Technical Support, 1-800-542-5377 or 1-708-345-7700 (Opt. 1).
2. Items **1 & 14** have associated ***Individual Plastics and/or Decals.*** *These pieces are not available individually. For the Plastic and/or Decal Kits (or views), see the page after next,* ***Playfield - Plastics (Screened & Clear) & Decals***, ***Page 67.***
3. **Legend Note:** Items noted with a black square ■ are General Parts. Items noted with a cyan square ■ are Rails. Items noted with a white square □ are Switches.

Playfield - General Parts ■ & Switches □ (Below)

№	BELOW PLAYFIELD PART NAME	QTY.	SPI PART №

General Items

1	Insulation Fiche Paper **(under Flippers)**	2	545-5721-00
2	Diode Terminal Strip 2-Lug (810) Isolated	5	055-5203-00

Note: Item 2 (Qty. 1) is located in the Cabinet on the Coin Door.

Item 2 is secured by: #6 X 3/8 HWH AB Zinc (Qty. 1/per) (234-5000-00).
Note: *1N4004 Diodes (112-5003-00) are used in all Diode applications. 1N4001 Diodes can be used for Switches and/or Coils. See Sec.* ***5****, Chp.* ***2****,* ***P/F Diode Terminal Strip****...*

3	3A 250v Slo-Blo Fuse	3	200-5000-08
	Fuse Clip Holder (Socket)	3	205-5000-01

Item 3 is secured by: #6 X 1/2" PPH AB (Qty. 1/per) (237-5805-00)
Note: *Item* ***3****, Fuse Clip Holder (Socket) 205-5000-01 is part of a set of 12 (205-5000-12). You can order them as individuals (...-01) or a set of 12 (...-12).*

4*	Diode Terminal Strip/Fuse Decals	1	820-6221-80

Note: *For Decal Descriptions & Locations, see Sec.* ***5****, Chp.* ***2****,* ***Playfield Wiring****, Page 105.*

Brackets for Mounting

5	Playfield Support Slide Bracket	2	535-6862-02

Item 5 is secured by: #8 X 1/2" HWH AB (Zinc) (Qty. 2/per) (234-5101-00) **and** #8-32 X 5/8" HWH Swage (Serr) Zinc (Qty. 1/per) (237-5975-03)

6	Edge Slide Bracket (Extended)	2	535-5988-01

Item 6 is secured by: #4 X 1/2" PFH (Zinc) (Qty. 5/per) (237-5840-00)

7	Pivot Pin Bracket Welded Assembly	2	500-5329-03

Item 7 is secured by: #8-32 X 5/8" HWH Swage (Serr) Zinc (Qty. 2/per) (237-5975-03)

8	Bracket, Back Panel Mounting	2	535-8964-00

Item 8 secures Item 23 *(prev. page)* by: #8 X 1/2" HWH AB (Zc) (Qty. 3/per) (234-5101-00)

Switches & Misc. PC Boards

A	Micro Sw. **(Roller Actuator, Lite Force)**	5	180-5119-02
B	EOS Switch Flipper **(on Flippers)**	2	180-5149-00
C	Stack (Blade) Switch **(on Slingshots)**	4	180-5054-00
D	Switch Asm. *(180-5157-00)* **(Shooter Lane)**	1	500-6096-00
E	Micro Sw. Roll-Over Right Brkt. Assy.	11	500-6227-02

Items D & E are secured by: #8 X 1/2" HWH AB (Zinc) (Qty. 2/per) (234-5101-00)

F	Micro Sw. **(Heavy Duty "Y" Flat Actuator)**	2	180-5116-01

Items A, D & F require a Switch Body Protect Plate (535-6539-00) which is secured by: #2-56 X 1/2" HWH Serr (Qty. 2) (237-5937-02) **and** #2-56 Hex Nut (Qty. 2) (240-5301-00).

G	Micro Switch **(on Pop Bumpers)**	3	180-5015-03
H	Switch Asm. *(180-5186-00)* **(30° Eject)**	1	500-6521-00
I	Switch & Target Assy. 1" Sq. (White)	2	515-5162-08
J	Sw. & Target Assy. 1½" Rect. (Wht.)	1	515-5027-08

Items I & J are secured by: #8 X 1/2" HWH AB (Zinc) (Qty. 2) (234-5101-00)

Note: *For more details on Items* ***I & J*** *and/or a break-down of parts, see* ***Appendix I****.*

K	Dual OPTO TRANS Bd. **(on Ball Trough)**	1	515-0173-00
	Dual OPTO REC Board **(on Ball Trough)**	1	515-0174-00
L/M	Single OPTO TRANS Bd. **(Orthanc Trough)**	1	515-7307-00
	Single OPTO REC Board **(Orthanc Trough)**	1	515-7308-00
N	Playfield 19-LED PC Board	1	520-5242-00

Note: *For how Items* ***A-C, F-N*** *are secured or for a better view, see Section* ***4****, Chapter* ***2****,* ***Drawings for Major Assemblies & Ramps****, on the individual assemblies noted. For Switches located on the Back Panel, see the* ***Blue Pages****, Pages* ***94-97****.*

Note: *For more details on Item* ***K, L/M & N*** *and/or a break-down of parts, see Section* ***5****, Chapter* ***4****,* ***Printed Circuit Boards****, Pages 109 (K) & 142 (L/M), 144 (N).*

O	DC Bi-Directional Relay Board	1	520-5066-00

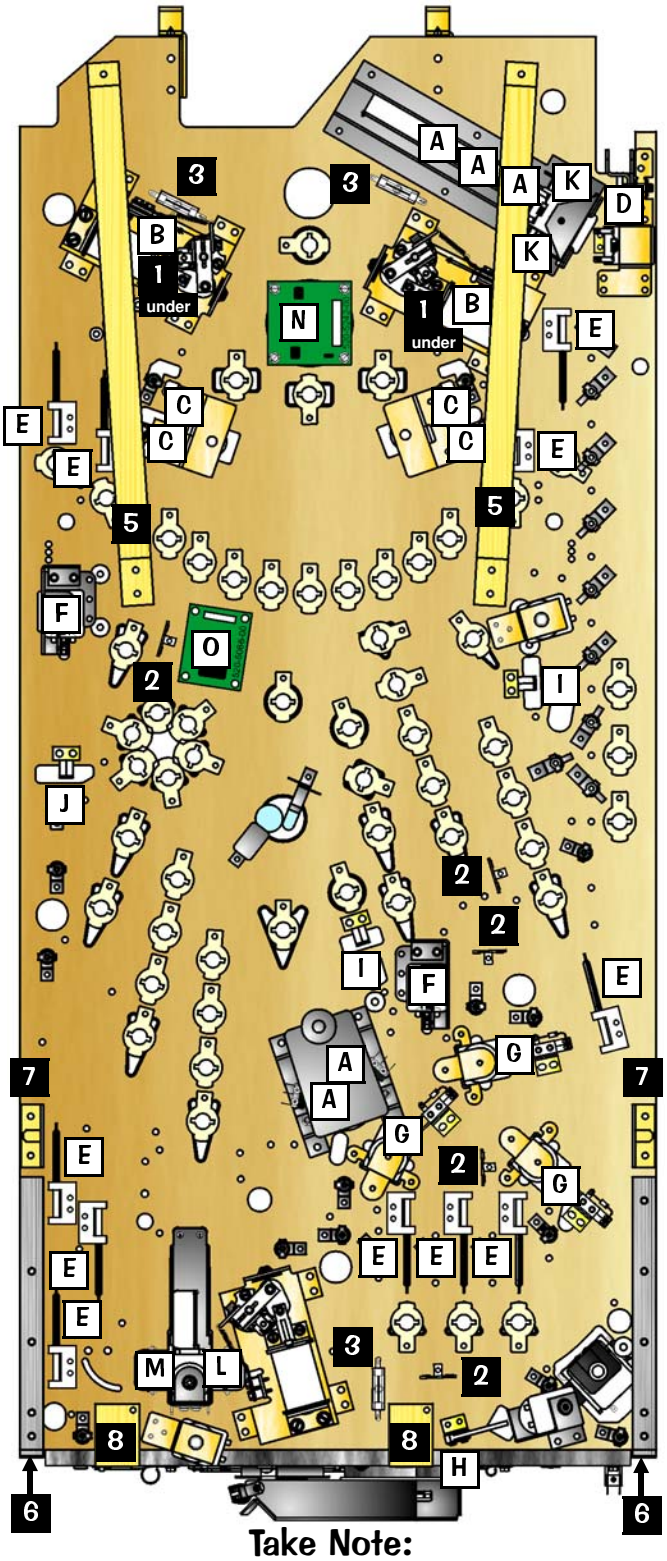

Take Note:

* An asterisk (*) indicates item(s) are not noted in the pictorials.

1. For Sockets & Bulbs (drawings & part numbers) see Pgs. **72-74**.
2. Some items or parts *may be included with* **or** *associated with* a Major Assembly or Ramp Assembly; **see the Blue Pages, Sec. 4, Chp. 2**. for parts required not appearing on this page. If you still cannot find the part required, Call Stern® Pinball, Inc. Technical Support, 1-800-542-5377 or 1-708-345-7700 (Opt. 1).
3. **Legend Note:** Items noted with a black square ■ are General Parts. Items noted with a white square □ are Switches and Miscellaneous PC Board(s).

Pinball Location Maintenance Kit Available: 502-6002-80
This kit consists of 8 oz. Novus Wax #2 Fine (Red) (675-0003-01), cloth and all Rubber Rings & Bulbs used in this Pinball Machine.

Ask your distributor about the Deluxe Pinball Location Maintenance Kit which includes Flipper Rebuild Kits!

Playfield - Plastics (Screened & Clear) & Decals

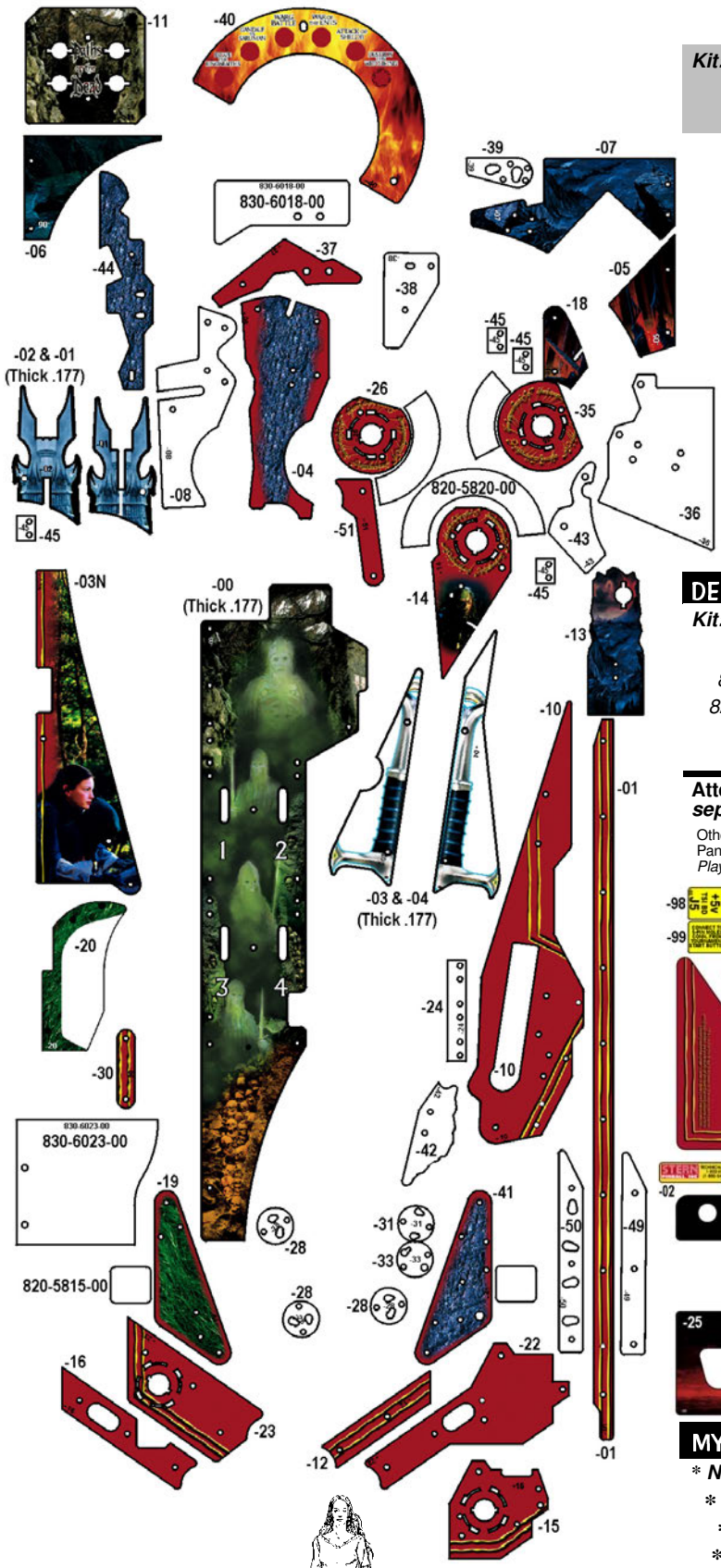

PLASTICS KIT — SPI PART №

Kit: **P/F Plastics (Screened & Clear) :**

803-5000-80 ***Kit includes:***

Screened & Clear 830-6009-XX Set,
Clear Piece 830-6018-00 & Clear Piece 830-6023-00

Kit: **P/F THICK (.177") Plastics (Screened) :**

803-5001-80 ***Kit includes:***

Screened 830-6019-XX Set

Attention: ***No individual Plastic or Decal can be ordered separately, unless noted otherwise.*** *

Screened Plastic Piece -20 *is located on the Exit Scoop (Lower Right Side of Playfield).* The piece is riveted into place and must be drilled out to replace *(see the Blue Pages, Page **85**, for view).*

DECALS KIT — SPI PART №

Kit: **Game Specific Decals**

802-5000-80 ***Kit includes:***

820-6297-01 (Mirror Panel), 820-6342-XX Set, 820-6342-98, 820-6342-99, 820-6347-00 (Mirror Eye), 820-6348-00 (Manget Ring Cover) ***and*** *820-6349-XX (Bottom Arch Lt. & Rt.)*

Attention: ***No individual Plastic or Decal can be ordered separately, unless noted otherwise.*** *

Other miscellaneous plastics and/or decals can be found on the Backbox & Speaker Panel Assemblies (Pages ***60-61***), *Cabinet - General Parts (Pages **62-63**) and Playfield - General Parts & Switches (Below) (Page **66**).*

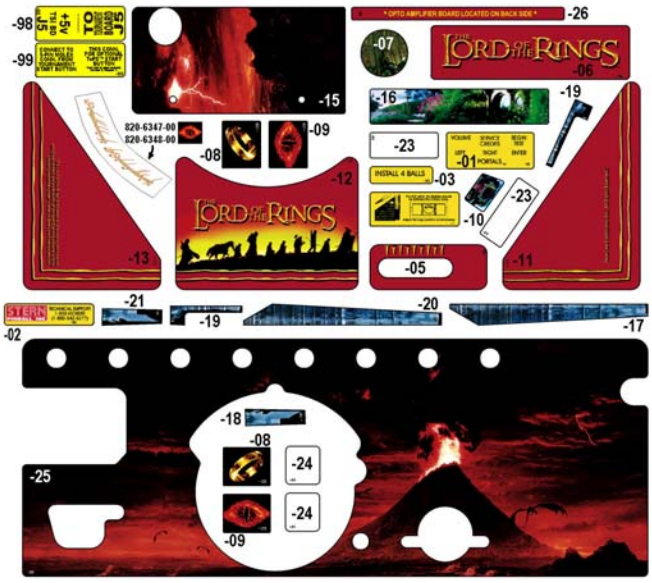

MYLAR — SPI PART №

* ***Not included*** *in the Decals Kit (must be ordered separately):*

*** Bumper Protectors (Qty. 3) Mylar, 820-5820-00**
*** Square Ball Drop Pads (Qty. 2), 820-5815-00**
*** Full Playfield Clear Mylar Sheet, 820-5889-00**

Playfield - Rubber Parts Black ■ (Rings Actual Size) †

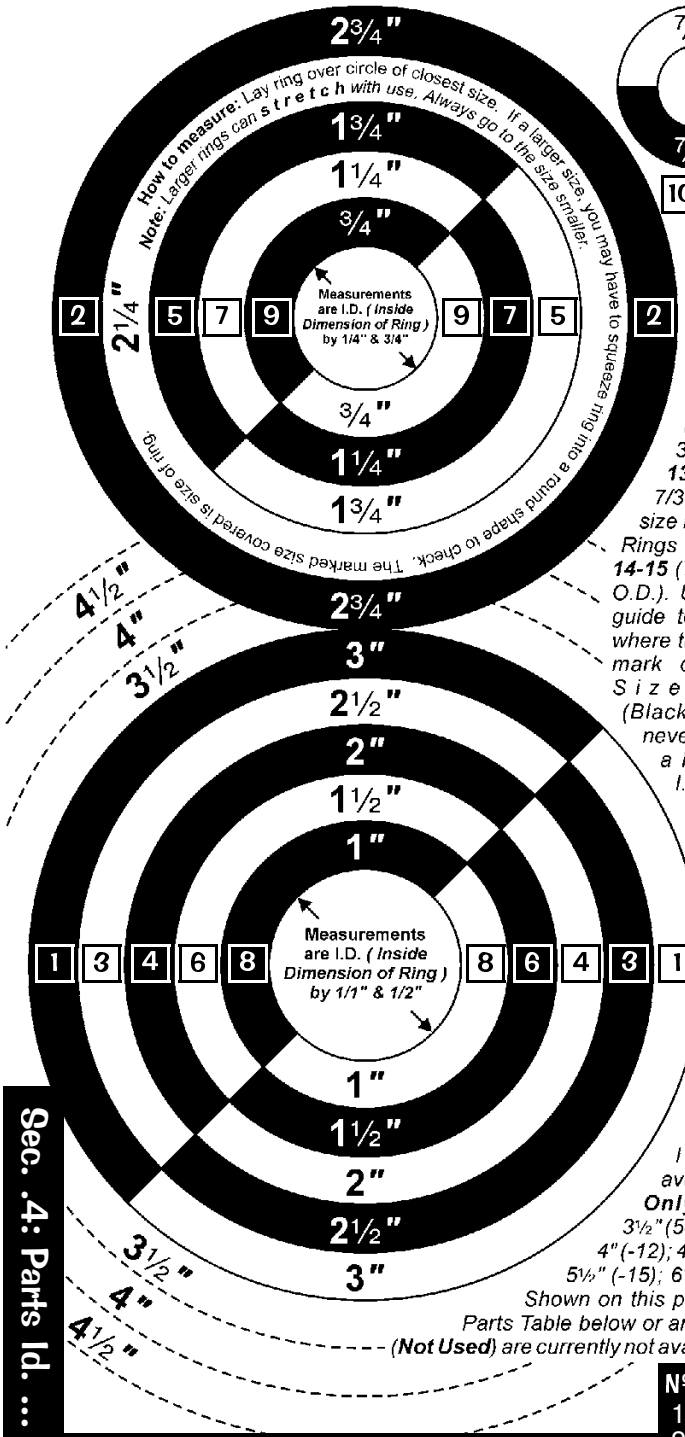

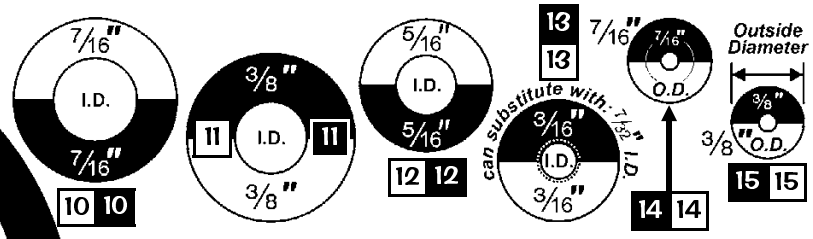

*Items **1-13** are measured by the Inside Diameter (I.D.). Items **1-9** and **11** are approximately 1/4" thick. Items **10**, **12-15** are approximately 3/16" thick. Item **13** can also be a 7/32" I.D Ring. The size is imprinted on all Rings except for Items **14-15** (7/16" O.D. & 3/8" O.D.). Use this page as a guide to measure rings where the size imprint or mark does not exist. Size 2¼" I.D. (Black or White) was never used. Choose a Ring Size +/- ¼" I.D. if required.*

***Note:** Sizes larger than 3" I.D. currently available in **Black Only (Not Used)**: 3½"(545-5348-11); 4"(-12); 4½"(-13); 5"(-14); 5½" (-15); 6" (-16). Sizes Not Shown on this page, listed in the Parts Table below or are noted with **N/U** (**Not Used**) are currently not available.*

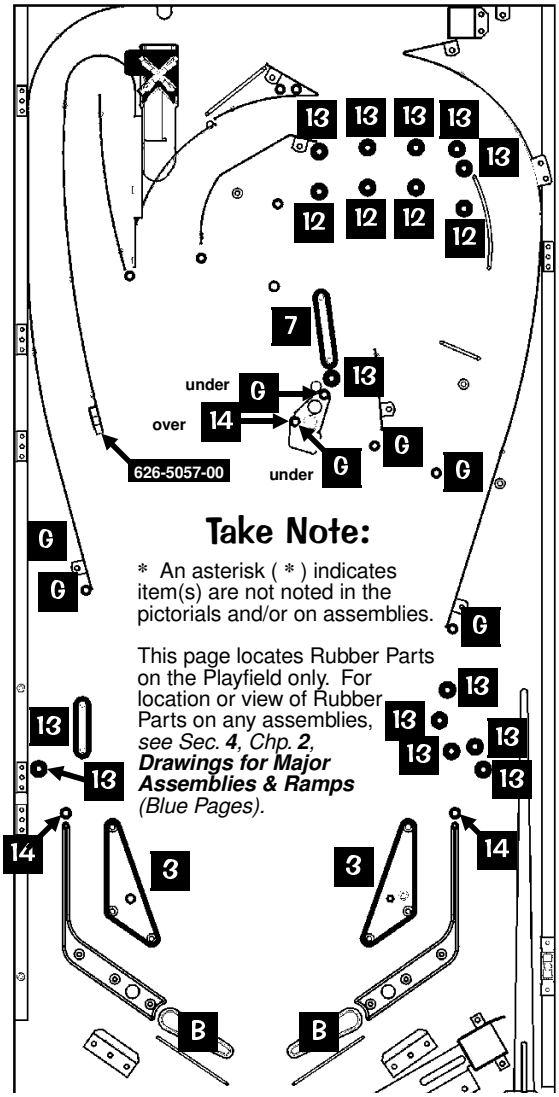

Take Note:

* An asterisk (*) indicates item(s) are not noted in the pictorials and/or on assemblies.

This page locates Rubber Parts on the Playfield only. For location or view of Rubber Parts on any assemblies, *see Sec. **4**, Chp. **2**, **Drawings for Major Assemblies & Ramps** (Blue Pages).*

***Note:** Item **14**, 7/16" O.D. Rings are used to cushion Metal Sockets under the Playfield and Back Panel*

Nº	RUBBER PART NAME	QTY.	SPI PART Nº
A	Small Flipper **BLACK** Ring		545-5207-00
	Sm. Flipper **RED** **(Soft Duro)** Ring		545-5207-**22**
B	Large Flipper **BLK** **(50 Duro)** Ring	2	545-5277-00
	Lg. Flipper **RED** **(Soft Duro)** Ring		545-5277-**22**
Optional Item B Replacements: Lg. **YELLOW (50 Duro)** Ring (**545-5277-04**) or Large **YELLOW (40 Duro)** Ring (**545-5277-06**)			
C*	Bumper **(Deflector Pad)**	3	545-5428-00
D*	Bumper **(Grommet) 1138 (A60)**	5	545-5105-00
E	Bumper **(Post)**		545-5009-00
F	Bumper (Post Sleeve, Short)		545-5151-00
G	Bumper **BLACK** **(Post Sleeve, Tall)**	11	545-5308-00
	Bumper **WHITE** **(Post Sleeve, Tall)**		545-5308-08
H*	O-Ring $\frac{11}{32}$" x $\frac{07}{32}$" x $\frac{1}{16}$" **(Flipper Buttons)**	2	545-5850-00

Nº	SPI PART Nº	QTY.	RUBBER PART NAME	QTY.	SPI PART Nº	Nº
1	545-5348-10		◀Black 3" I.D. Ring White▶		-60 N/U	1
2	545-5348-20		Black 2¾" I.D. Ring White		-70 N/U	2
3	545-5348-09	2	◀Black 2½" I.D. Ring White▶		545-5348-59	3
4	545-5348-08		Black 2" I.D. Ring White		545-5348-58	4
5	545-5348-21		◀Black 1¾" I.D. Ring White▶		-71 N/U	5
6	545-5348-07		◀Black 1½" I.D. Ring White		545-5348-57	6
7	545-5348-06	1	◀Black 1¼" I.D. Ring White▶		545-5348-56	7
8	545-5348-05	1	◀Black 1" I.D. Ring White		-55 N/U	8
9	545-5348-04		◀Black ¾" I.D. Ring White▶		545-5348-54	9
10	545-5348-18		Black 7/16" I.D. Ring White		-68 N/U	10
11	545-5348-03		◀Black ⅜" I.D. Ring White▶		-53 N/U	11
12	545-5348-02	4	◀Black 5/16" I.D. Ring White		545-5348-52	12
13	545-5348-01	12	◀Black 3/16" I.D. Ring White▶		545-5348-51	13
14	545-5348-17	37	◀Black 7/16" O.D. Ring White		-67 N/U	14
15	545-5348-19	1	◀Black ⅜" O.D. Ring White▶		545-5348-69	15

† Items with no Qty. (quantity) are not used in this game. Size and/or quantities may change during production.

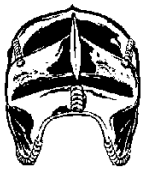

Playfield - Metal Posts (Screws) & Nuts (Actual Size) †

Items 1, 3 & 4 Posts can use 3/8" O.D. Black Ring, 545-5348-19 or White Ring, 545-5348-69.

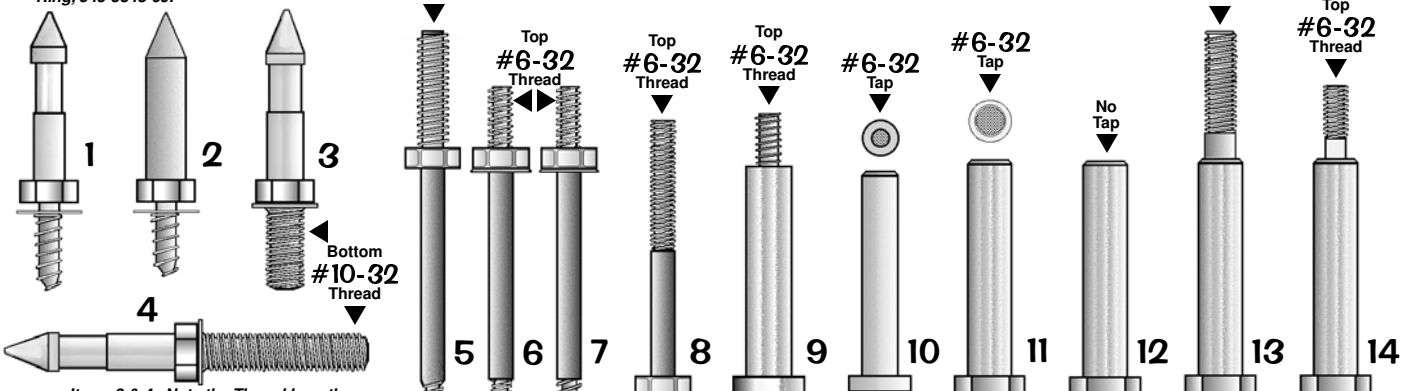

Items 3 & 4: Note the Thread Lengths.

Items 11-14 Posts can use a Black Post Rubber Sleeve (Tall), 545-5308-00 or White Post Rubber Sleeve (Tall), 545-5308-08.

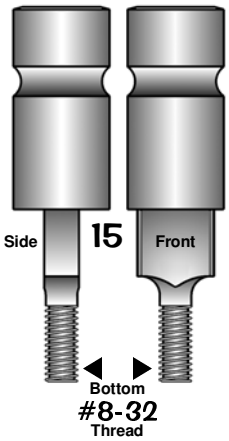

Item 15 Adjustable Sliding Post can use 5/16" I.D. Black Ring, 545-5348-02 or White Ring 545-5348-52.

Items A & B are typically used with Hex Spacers above the Playfield.

Item C is typically used with the bottom Cabinet Speaker (used with #6-32 Nylon Stop Nut, 240-5005-00).

Item D is typically used to secure "Item 15 (515-5939-00) in Bumper Bottom Assembly, 515-6459-04".

Note: The "Fins" keep the screw from turning inside the wood hole.

Items 17-20 all Bottoms are #6-32 Thread

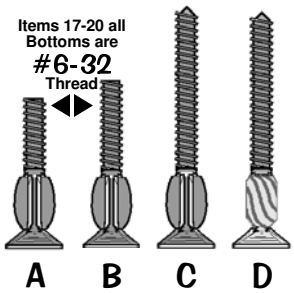

Nut Note: All nuts shown with a "✔" are used in this game. The quantities (not specified) vary. The remaining Items listed are not used in this game and are noted for reference only (used in prior games).

Shown Below~
- #6-32 Nylon Stop Nut: 240-5005-00 ✔

Top & Side Views

Nylon Stop Nuts *Not Shown:*
- #6-32 (w/ 1/4" Hex Body): 240-5010-00
- #8-32: 240-5102-00 ✔
- #10-32: 240-5203-00 ✔
- #10-24: 240-5206-00 ✔
- #4-40: 240-5303-00 ✔
- #4-40 (18/8 Stainless): 240-5303-01
- 5/16"-18: 240-5316-00

Shown Below~
- #6-32 KEPS Nut (with Star Washer): 240-5008-00 ✔

Bottom & Side Views

KEPS Nuts *Not Shown:*
- #6-32 (w/ 1/4" Hex Body): 240-5011-00
- #8-32: 240-5104-00 ✔
- #10-32: 240-5208-00 ✔
- #10-24: 240-5207-00 ✔
- #4-40: 240-5318-00

Shown Below~
- #6-32 Hex Nut (No Star Washer): 240-5004-00 ✔

Top View

Hex Nuts *Not Shown:*
- #8-32: 240-5103-00
- #10-32: 240-5201-00
- #10-24: 240-5202-00 ✔
- #10-32 X 3/8": 240-5209-00
- 3/4-16: 240-5315-00
- #2-56: 240-5301-00 ✔
- 7/8"-14: 240-5317-00

Shown Below~
- #6-32 T-Nut: 240-5002-00 ✔

Bottom & Side Views

T-Nuts *Not Shown:*
- #6-32 (w/Side Cut Off): 240-5002-01
- #8-32: 240-5101-00 ✔
- #10-32 (Black Oxide): 240-5007-00
- #10-32 (w/Side Cut Off): 240-5205-00
- #10-32 X 5/16": 240-5204-00 ✔
- #10-24: 240-5200-00

Shown Below~
- 1/4" X 20 Flange Nut: 240-5300-00 ✔

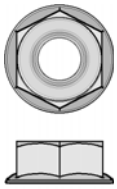

Top & Side Views

Miscellaneous Nuts *Not Shown:*
- Plastic Pal Nut (on Flipper Buttons): 240-5003-00
- Metal Pal Nut (on Flipper Buttons): 240-5003-01 ✔
- #6-32 Wing Nut: 240-5001-00
- #8-32 Wing Nut: 240-5100-00
- #10-24 Wing Nut: 240-5211-00
- 1/4"-20 Wing Nut: 240-5302-00
- 1/4"-20 Toggle Wing: 240-5324-00

№	METAL POST NAME	QTY.	SPI PART №
1	Mini-Post Wood Screw		530-5004-00
2	Mini-Post Wood Screw (no cut-away)	5	530-5004-01
3	Mini-Post MS / #10-32 Bot. .4" Thread		530-5005-01
4	Mini-Post MS / #10-32 Bot. .875" Thread	4	530-5005-00
5	Post Fasten #8-32 Top / #6-32 Bot.		530-5008-00
6	Post Fasten #6-32 Top / #6-32 Bot.	6	530-5012-02
7	Post Fstn. #6-32 Top / Wood Scr. Bot.		530-5010-02
8	Post #6-32 Top / Wood Screw Bottom		530-5263-01
9	Post Fasten #6-32 Top / #8-32 Bot.		530-5007-00
10	Post #6-32 Tap / #6-32 Bottom		530-5127-00

№	METAL POST NAME	QTY.	SPI PART №
11	Post Hex Base #6-32 Tap/#10-32 Bot.	3	530-5332-01
12	Post Hex Base (No Tap)/#10-32 Bot.	1	530-5332-00
13	Post Hex Base #8-32 Top/#10-32 Bot.		530-5332-02
14	Post Hex Base #6-32 Top/#10-32 Bot.	8	530-5332-03
15	*Adjustable* Sliding Post (Brass) #8-32 Bot.		530-5621-00
A	#6-32 X 3/4" Fin Shank Screw		237-5921-02
B	#6-32 X 7/8" Fin Shank Screw		237-5921-04
C	#6-32 X 1 1/4" Fin Shank Screw	4	237-5883-00
D	#6-32 X 1 3/16" Spirol Fin Shank Screw	9	237-5957-00

† Items with no Qty. (quantity) are not used in this game. Size and/or quantities may change during production.

Playfield - Hex Spacers (Actual Size) †

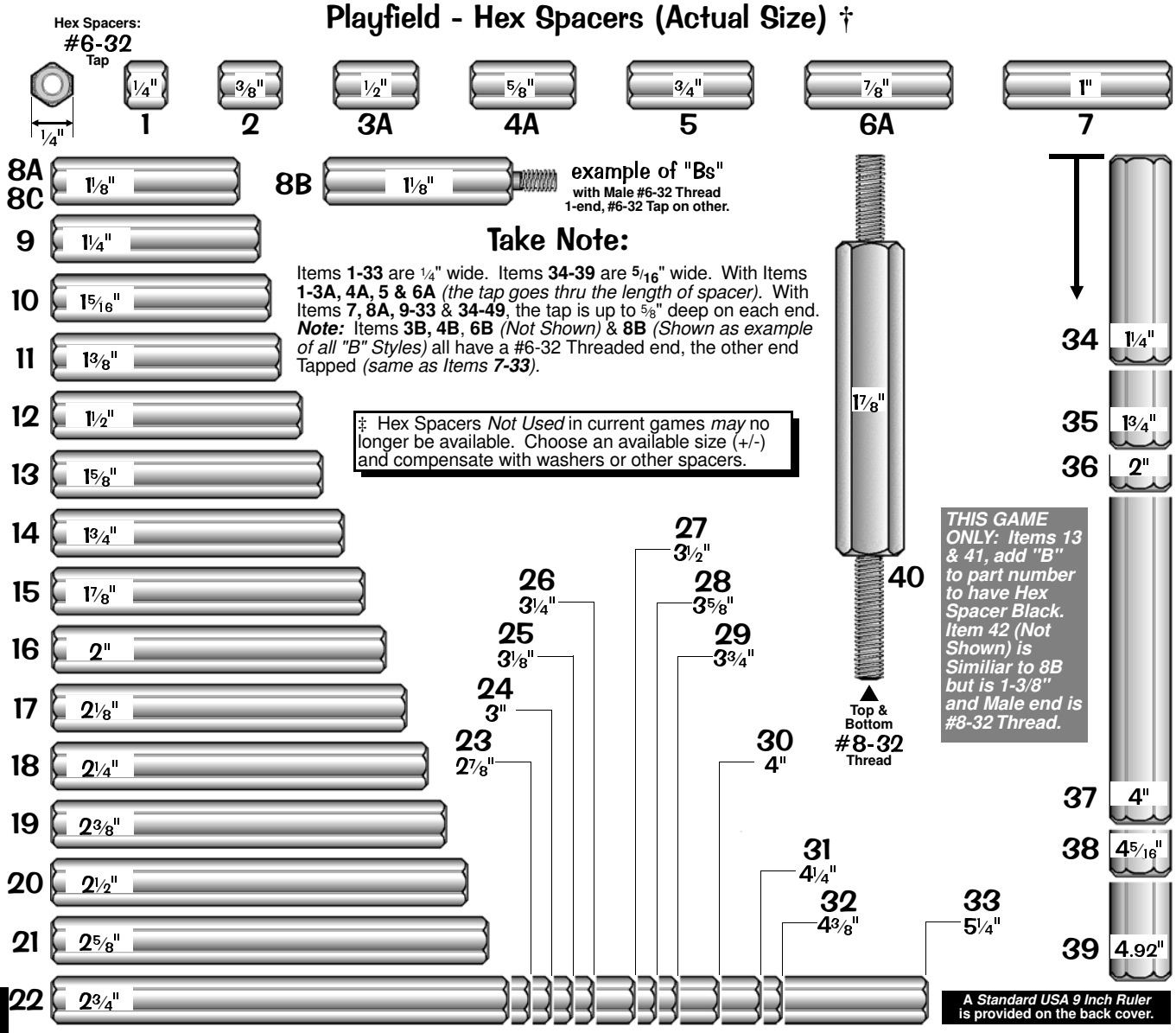

Take Note:

Items **1-33** are 1/4" wide. Items **34-39** are 5/16" wide. With Items **1-3A, 4A, 5 & 6A** *(the tap goes thru the length of spacer)*. With Items **7, 8A, 9-33** & **34-49**, the tap is up to 5/8" deep on each end. ***Note:*** Items **3B, 4B, 6B** *(Not Shown)* & **8B** *(Shown as example of all "B" Styles)* all have a #6-32 Threaded end, the other end Tapped *(same as Items **7-33**)*.

‡ Hex Spacers *Not Used* in current games *may* no longer be available. Choose an available size (+/-) and compensate with washers or other spacers.

THIS GAME ONLY: Items 13 & 41, add "B" to part number to have Hex Spacer Black. Item 42 (Not Shown) is Similiar to 8B but is 1-3/8" and Male end is #8-32 Thread.

Nº	HEX SPACER NAME	QTY.	SPI PART Nº
1	1/4" X 1/4" : #6-32 Tap *(both ends)*		254-5008-00
2	3/8" X 1/4" : #6-32 Tap *(both ends)*		254-5008-12
3A	1/2" X 1/4" : #6-32 Tap *(both ends)*	5	254-5008-03
3B*	Identical to **3A** *with #6-32 Thread end*		254-5024-03
4A	5/8" X 1/4" : #6-32 Tap *(both ends)*		254-5008-02
4B*	Identical to **4A** *with #6-32 Thread end*		254-5024-02
5	3/4" X 1/4" : #6-32 Tap *(both ends)*	4	254-5008-04
6A	7/8" X 1/4" : #6-32 Tap *(both ends)*		254-5008-05
6B*	Identical to **6A** *with #6-32 Thread end*		254-5024-05
7	1" X 1/4" : #6-32 Tap *(both ends)*	1	254-5008-06
8A	1 1/8" X 1/4" : #6-32 Tap *(both ends)*	4	254-5008-17
8B	Identical to **8A** *with #6-32 Thread end*		254-5024-17
8C	... to 8A *with **#8-32** Tap (both ends)*		254-5031-06
9	1 1/4" X 1/4" : #6-32 Tap *(both ends)*	1	254-5008-11
10	1 5/16" X 1/4" : #6-32 Tap *(both ends)*		254-5008-34
11 ‡	1 3/8" X 1/4" : #6-32 Tap *(both ends)*		254-5008-33
12	1 1/2" X 1/4" : #6-32 Tap *(both ends)*		254-5008-09
13 ‡	1 5/8" X 1/4" : #6-32 Tap ***(BLACK)***	2	**254-5008-13B**
14	1 3/4" X 1/4" : #6-32 Tap *(both ends)*	3	254-5008-10
15 ‡	1 7/8" X 1/4" : #6-32 Tap *(both ends)*		254-5008-20
16	2" X 1/4" : #6-32 Tap *(both ends)*		254-5008-07
17	2 1/8" X 1/4" : #6-32 Tap *(both ends)*		254-5008-32
18	2 1/4" X 1/4" : #6-32 Tap *(both ends)*		254-5008-18
19	2 3/8" X 1/4" : #6-32 Tap *(both ends)*		254-5008-28
20	2 1/2" X 1/4" : #6-32 Tap *(both ends)*		254-5008-16
21	2 5/8" X 1/4" : #6-32 Tap *(both ends)*		254-5008-08
22	2 3/4" X 1/4" : #6-32 Tap *(both ends)*		254-5008-15
23	2 7/8" X 1/4" : #6-32 Tap *(both ends)*		254-5008-31
24	3" X 1/4" : #6-32 Tap *(both ends)*		254-5008-14
25	3 1/8" X 1/4" : #6-32 Tap *(both ends)*		254-5008-19
26	3 1/4" X 1/4" : #6-32 Tap *(both ends)*		254-5008-26
27	3 1/2" X 1/4" : #6-32 Tap *(both ends)*		254-5008-27
28	3 5/8" X 1/4" : #6-32 Tap *(both ends)*		254-5008-25
29	3 3/4" X 1/4" : #6-32 Tap *(both ends)*		254-5008-36
30	4" X 1/4" : #6-32 Tap *(both ends)*		254-5008-21
31	4 1/4" X 1/4" : #6-32 Tap *(both ends)*		254-5008-30
32	4 3/8" X 1/4" : #6-32 Tap *(both ends)*		254-5008-29
33	5 1/4" X 1/4" : #6-32 Tap *(both ends)*		254-5008-35
34	1 1/4" X 5/16" : #6-32 Tap *(both ends)*		254-5018-09
35	1 3/4" X 5/16" : #6-32 Tap *(both ends)*		254-5018-06
36	2" X 5/16" : #6-32 Tap *(both ends)*		254-5018-07
37	4" X 5/16" : #6-32 Tap *(both ends)*		254-5018-03
38	4 5/16" X 5/16" : #6-32 Tap *(both ends)*		254-5018-00
39	4.92" X 5/16" : #6-32 Tap *(both ends)*		254-5018-04
40	1 7/8" X 3/8" : #8-32 *Thread (both ends)*		***530***-5285-00
41*	6" X 5/16" : #6-32 Tap ***(BLACK)***	1	**254-5018-02B**
42*	1 3/8" X 1/4" : #8-32 Tap *(1 end)*	1	254-5031-06

† Items with no Qty. (quantity) are not used in this game. Size and/or quantities may change during production.

Playfield - Posts & Spacers (Actual Size) †

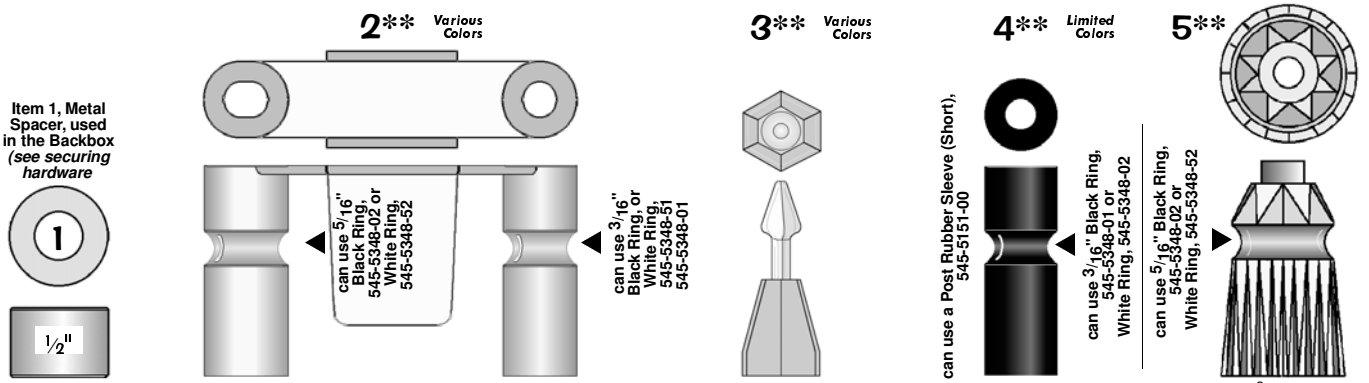

Items 4-5 Posts used in pairs can use ¾" through 3" Rubber Rings, see Rubber Parts for Part Numbers.

Take Note:

PLASTIC PART COLOR CHART					
Nº	Color	Nº	Color	Nº	Color
-00	Black	-06	Yellow	-12	Fluor. Blue
-01	Clear	-07	Orange	-13	Teal Green
-02	Red	-08	White	-14	Gray
-03	Amber	-09	Purple	-15	Luminescent
-04	Green	-10	Fluor. Orange	-16	Gold
-05	Blue	-11	Fluor. Green		

** Items **2, 4 & 5** come in various colors *(may not be available in every color)*. Item **4** is currently only available in the color(s) stated in this game manual *(other colors used in prior games may no longer be available)*. The "**-XX**" or last 2-Digits in Part Nºs which come in various colors, should be replaced with the desired 2-Digit Nº from the above Color Chart. *Some colors may no longer be available for desired item.*

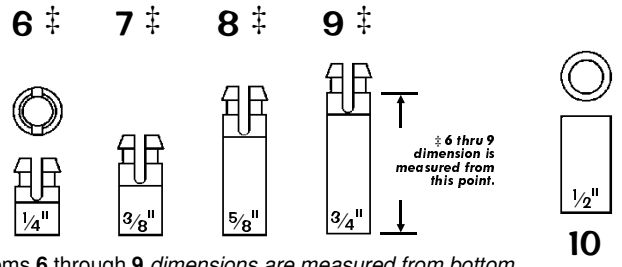

‡ Items **6** through **9** *dimensions are measured from bottom to just under the cut-away.* Item **30** *dimension* is measured from *top-to-top* of curve. *See pictorials with Items **9** & **30**.*

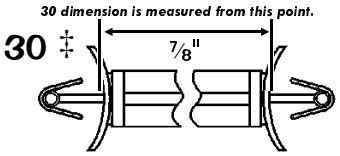

Take Note:

If any one of Items **11-23** Plastic Spacers is not available in the size required, order the smaller sized spacers required to stack sizes together until appropriate size is achieved *(e.g. If 1⅛" is needed but unavailable, order a ½" + ⅝" & stack to = 1⅛").*

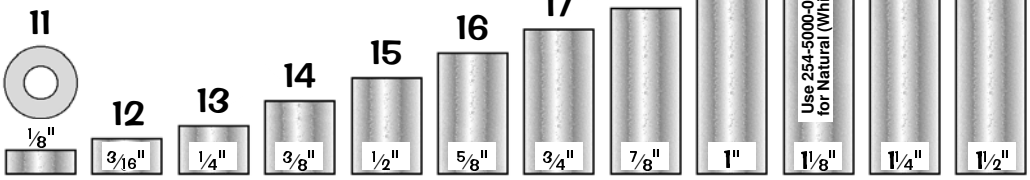

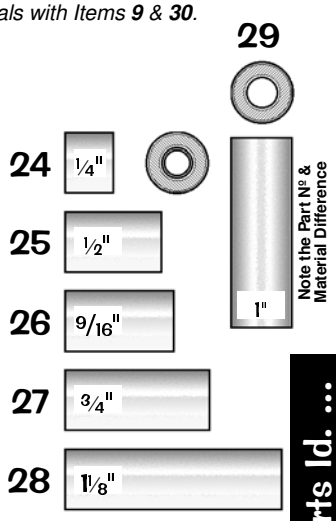

Nº	POST & SPACER NAME	QTY.	SPI PART Nº
1	⅜" X ½" Metal Spacer (Backbox)	2	530-5099-00
2**	Top Lane Plastic Mini-Lite Hood (Red)	4	550-5061-02
	Item 2 typically secured by: #6-32 X 1-3/4" PPH MS (Zinc) (Qty. 2/per) (237-5511-00) **and** Washer 9/64" X 5/16" OD X 1/32" (Qty. 2/per) (242-5017-00), if used.		
3**	Mini-Jewel Plastic Post (Clear)	14	550-5052-01
	Item 3 typically secured by: #6 X 3/8" HWH AB (Zinc) (Qty. 1/per) (234-5000-00)		
4**	1 1/16" 1-Groove Plastic Post (Black)	3	550-5059-00
	1 1/16" 1-Groove Plastic Post (Clear)	19	550-5059-01
5**	1-Groove Jewel Plastic Post (Clear)	1	550-5034-01
	Items 4 & 5 typically secured by: Post Fastening Screw #6-32 Top / #6-32 Bottom (Qty. 1/per) (530-5012-02, Item 6 Page 69).		
6 ‡	¼" Slf. Rtn. Plastic Spacer White		254-5007-02
7 ‡	⅜" Slf. Rtn. Plastic Spacer White	8	254-5007-01
8 ‡	⅝" Slf. Rtn. Plastic Spacer White		254-5007-00
9 ‡	¾" Slf. Rtn. Plastic Spacer White		254-5007-03
10	½" X ¼" Plastic Spacer White **(Narrow)**		254-5000-03
11	⅛" X ⅜" Plastic Spacer Gray		254-5000-19
12	3/16" X ⅜" Plastic Spacer Gray	4	254-5000-18
13	¼" X ⅜" Plastic Spacer Gray	5	254-5000-02
14	⅜" X ⅜" Plastic Spacer Gray	4	254-5000-12
15	½" X ⅜" Plastic Spacer Gray	9	254-5000-01
16	⅝" X ⅜" Plastic Spacer Gray	2	254-5000-14
17	¾" X ⅜" Plastic Spacer Gray	19	254-5000-07
18	⅞" X ⅜" Plastic Spacer Gray	1	254-5000-11
19	1" X ⅜" Plastic Spacer Gray *or* Black	1	254-5000-04
20	1⅛" X ⅜" Plastic Spacer Gray		254-5000-06
	1⅛" X ⅜" Plastic Spacer Natural	1	254-5000-06N
21	1¼" X ⅜" Plastic Spacer Gray	3	254-5000-05
22	1½" X ⅜" Plastic Spacer Gray		254-5000-08
23	1 15/16" X ⅜" Plastic Spacer Gray		254-5000-15
24	¼" X 5/16" X .144" I.D. Metal Spacer	1	254-5014-03
25	½" X 5/16" X .144" I.D. Metal Spacer	3	254-5014-00
26	9/16" X 5/16" X .144" I.D. Metal Spacer		254-5014-04
27	¾" X 5/16" X .144" I.D. Metal Spacer		254-5014-01
28	1⅛" X 5/16" X .144" I.D. Metal Spacer		254-5014-02
29	1" X 5/16" X .144" I.D. Metal Spacer		254-5001-00
30‡	⅞" Plastic Spacer Support **(Dual-Locking)**	4	254-5039-14

† Items with no Qty. (quantity) are not used in this game. Size and/or quantities may change during production.

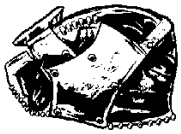

Playfield - Small Bayonet Type Bulbs & Sockets (Actual Size) †

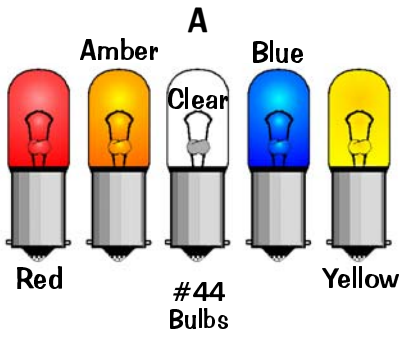

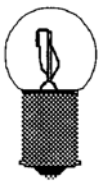

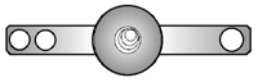

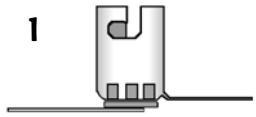

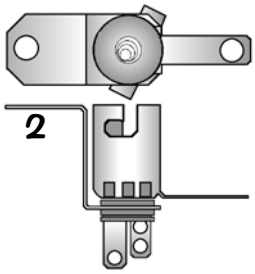

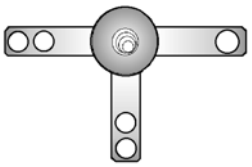

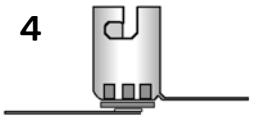

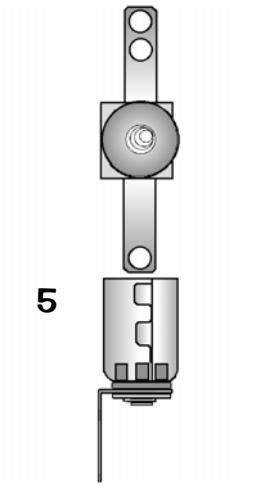

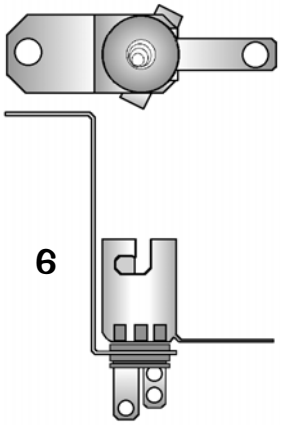

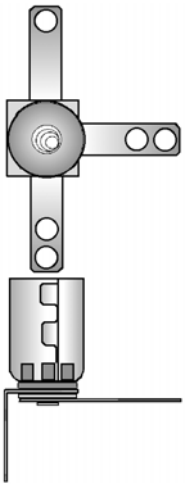

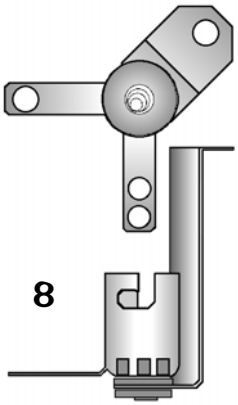

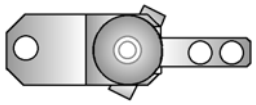

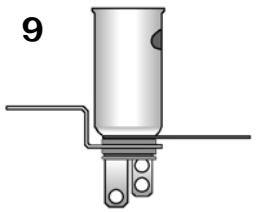

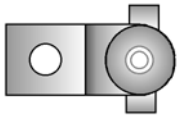

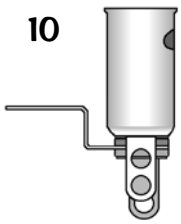

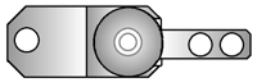

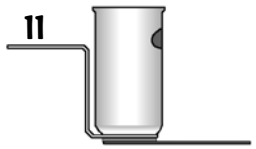

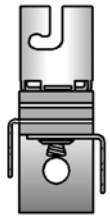

№	SMALL BULB or SOCKET NAME	QTY.	SPI PART №
A	#44 Bulb (Clear)	42	165-5000-44
A	#44 Bulb (Red)		165-5053-02
A	#44 Bulb (Amber)		165-5053-03
A	#44 Bulb (Blue)		165-5053-05
A	#44 Bulb (Yellow)		165-5053-06
B	#455 Twinkle Bulb		165-5003-00
1	2-Lug Staple Down Socket	10	077-5000-00
2	3-Lug Stand-Up Short Socket	8	077-5008-00
3	2-Lug Stand-Up Short Socket	7	077-5002-00
4	3-Lug Staple Down Socket	6	077-5001-00
5	2-Lug Laydown Socket		077-5003-00
6	3-Lug Stand-Up Long Socket	1	077-5009-00
7	3-Lug Laydown Socket (3 Lugs Flat)	1	077-5006-00
8	2-Lug Stand-Up Long Socket		077-5005-00
9	3-Lug Stand-Up Long Shell Socket		077-5013-00
10	2-Lug Stand-Up Lg. Shell Socket (Gls)	5	077-5031-00

№	SOCKET NAME	QTY.	SPI PART №
11	1-Lug Stand-Up Long Shell Socket		077-5012-00
12	3-Lug Laydown Socket (2 Lugs Bent)		077-5032-00

† Items with no Qty. (quantity) are not used in this game. Size and/or quantities may change during production.

Playfield - Large Bayonet Type Bulb & Sockets (Actual Size) †

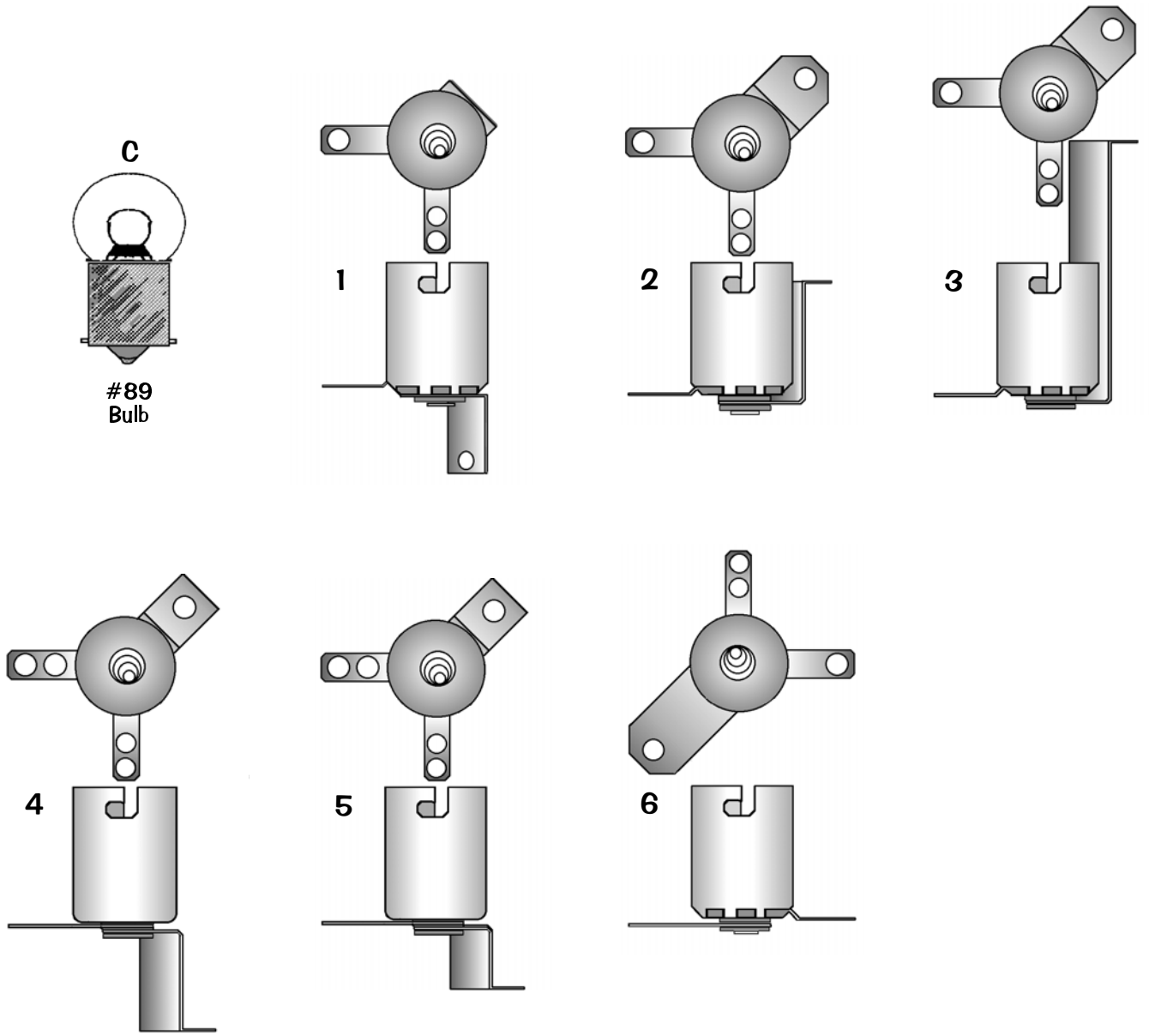

† Items with no Qty. (quantity) are not used in this game.
Size and/or quantities may change during production.

№	LARGE BULB & SOCKET NAME	QTY.	SPI PART №
C	#89 Bulb	2	165-5000-89
1	2-Lug Laydown Standard Socket	2	077-5100-00
2	2-Lug Stand-Up Short Socket		077-5101-00
3	2-Lug Stand-Up Long Socket		077-5102-00
4	2-Lug Stand-Up Rev. Mount Socket		077-5103-00
5	2-Lug Stand-Up Rv. Mnt. Short Socket		077-5106-00
6	2-Lug Straight Leg Socket		077-5107-00

Playfield - Wedge Base Bulbs & Sockets (Actual Size) †

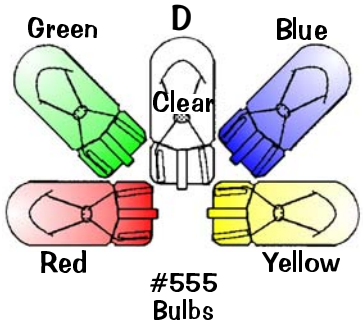

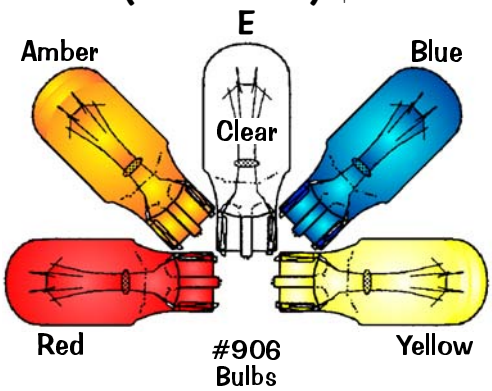

1

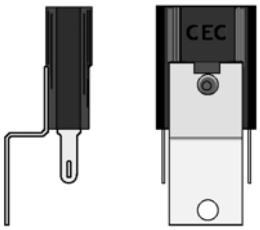

2

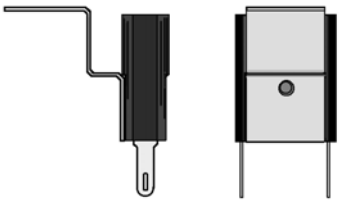

3

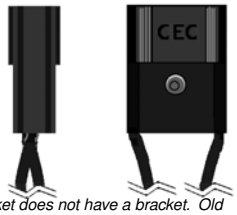

Socket does not have a bracket. Old stock may include an "L" style bracket (on each side) but was never required).

4

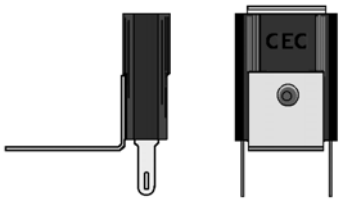

5

6

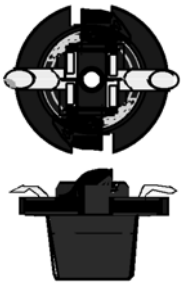

8a/b Top View (8b Side View is Not Shown)

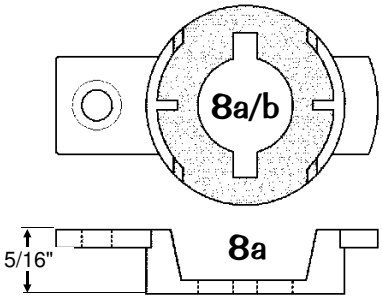

Take Special Note

Item 7a is an **IDC** (Insulation Displacement Connection) Style Socket (this style is solderless). This socket is secured to the playfield or component by Items **8a** or **8b** Snap-On Socket Brackets, or *may* also be snapped into specially cut **Clear and/or Screened Plastic Pieces** *(used only when sockets are positioned closely together and/or in a special applications, e.g. on Ramps). If Plastic Pieces are used to mount some **7a** or **7b** Sockets, it will be noted on Page **67**, Playfield - Plastics & Decals.*

Take Note:

* An asterisk (*) indicates item(s) are not noted in the pictorials.

1. Item **3** Socket has 2 Wires attached are approximately 12" ea.
2. Item **5** Socket **was** used on PC Light Boards to position bulbs vertically; Item **5** Socket is secured by "twisting" into place.
3. Item **D** Bulb (#555) can be used in all sockets, *except Item **6***. Item **E** Bulb (#906) can be used in all sockets, *except Item **5***.
4. Item **7a** Socket is equipped with a *built-in* Diode, 1N4003 (112-5003-00), however, replacement can be made with a 1N4001 Diode (112-5001-00). Item **7b** Socket is ***NOT*** equipped with a diode *(Not Required)*.

Note: *Always replace with same type bulb in original application.*

7a only

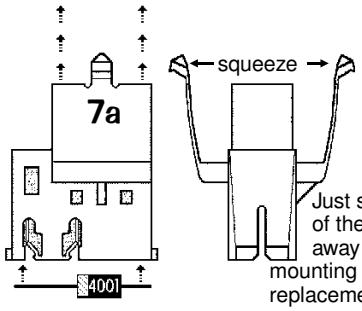

7b is Yellow with No Diode

Just squeeze the "side arms" of the socket together & pull away from the bracket or mounting board for easy Bulb replacement.

№	WEDGE BULB & SOCKET NAME	QTY.	SPI PART №	№	WEDGE BULB & SOCKET NAME	QTY.	SPI PART №
D	#555 Wedge Base Bulb (Clear)	41	165-5002-00	1	Wedge Base Socket (Laydown)	3	077-5026-01
D	#555 Wedge Base Bulb (Red)		165-5054-02	2	Wedge Base Socket (Offset)	2	077-5029-00
D	#555 Wedge Base Bulb (Green)	4	165-5054-04	3	W.B. Socket (Bumpers/Special App.)		077-5206-00
D	#555 Wedge Base Bulb (Blue)		165-5054-05	4	Wedge Base Socket (Laydown GI)		077-5030-00
D	#555 Wedge Base Bulb (Yellow)		165-5054-06	5	#555 *only* Wedge Base Socket (Twist)		077-5007-00
E	#906 Wedge Base Bulb (Clear)	9	165-5004-00	6	#906 *only* Wedge Base Socket (Twist)		077-5016-00
E	#906 Wedge Base Bulb (Red)	1	165-5004-02	7a	IDC Snap-On Socket	61	077-5216-00
E	#906 Wedge Base Bulb (Amber)		165-5004-03	7b	IDC Snap-On Socket ***No Diode***	6	077-5216-**01**
E	#906 Wedge Base Bulb (Blue)		165-5004-05	8a	5/16" Ht. Snap-On Socket Bracket	58	545-5760-18
E	#906 Wedge Base Bulb (Yellow)		165-5004-06	8b*	19/32" Ht. Snap-On Socket Bracket		545-5760-19

† Items with no Qty. (quantity) are not used in this game. Size and/or quantities may change during production.

Drawings for Major Assemblies & Ramps (The Blue Pages)

Overview

Drawings are provided for the Major Assemblies in this game with individual parts of each assembly numbered. Items noted with a white circle ○ are mounted above the playfield; items noted with a black circle ● are mounted below. All numbered parts describe the **NAME**, **QUANTITY** & **PART Nº**. **ASSOCIATED PARTS** (**AP-**) are noted and/or viewed with the associated Major Assembly.

*For **Cabinet**, **Backbox** and/or **General Playfield Parts** (not described herein), see the **Pink Pages**, **59-74**.*

↻ **Coil Note:** ↻ Either -00**B** *or* -00**T** can be used for coil replacements. *-00B or -00T listed is preferable for easier diode access and may differ on game.*

Ball Shooter (Plunger) Assembly, 500-6146-00-07 (Items 1-8)

Manually launch the ball into play.

Nº	INDIVIDUAL PART NAME	QTY.	SPI PART Nº
1	Housing (Shooter Assembly)	1	535-5067-02
	Item 1 is secured to the Cabinet by: Support Plate (Qty. 1) (535-5027-00), #10-32 X 1/2" PPH (Sems) Zinc TF (Qty. 3) (237-6033-00), #10 Split Lock Washer (Qty. 3) (234-5003-00) **and** #6 X 5/8" HWH AB (Zinc) (Qty. 2) (234-5002-00)		
2	Rod Assembly (w/Black Knob)	1	515-6557-00
3	Comp. Spring (**ORG**, .038" ø, 5⅝" Lg.)	1	266-5001-07
4	Compression Spring (Short Plunger)	1	266-5010-00
5	Bushing, 3/8" I.D. (Oilite)	2	280-5010-00
6	Washer, 3/8" I.D. X 5/8" O.D. X 1/16"	3	242-5014-00
7	Retaining Ring, 3/8" ø Shaft	1	270-5012-00
8	Plunger Tip (Black 50 Duro)	1	545-5276-00

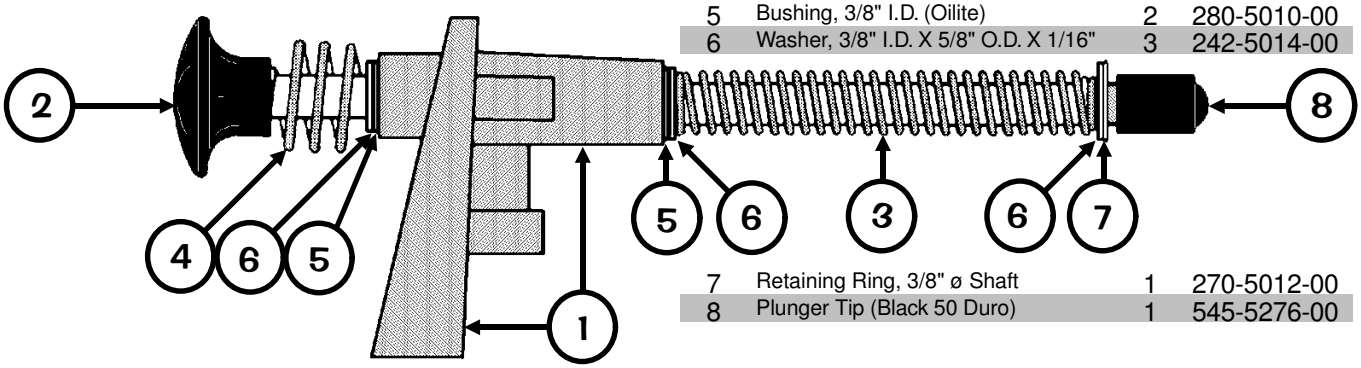

Autoplunger Arm Weld Assembly, 500-6091-00 (Items 1-5)

Automatically launches the ball into play.

◀ & ▶

Autoplunger Coil Assembly, 500-6092-02 (Items 6-9)

Works in conjunction with the Arm Weld Asm.

Nº	... ARM WELD PART NAME	QTY.	SPI PART Nº
1	Arm Weld Assembly	1	515-6526-00
	Item 1 is secured to Item 2 by: Retaining Ring, 1/4" ø Shaft (Qty. 1) (270-5002-00)		
2	Autoplunger Fulcrum	1	535-7697-00
3	Nyliner, 1/4" (Thomson #4I1-FF)	2	545-5423-00
4	Plunger & Link Assembly	1	515-5338-00
	Item 4 is secured to Item 1 by: Retaining Ring, 1/4" ø Shaft (Qty. 1) (270-5002-00) ***For Individual Items use :*** Plunger 2" Lg. (**530-5025-01**), Plunger Link (**545-5293-00**) **and** Roll Pin 1/8" ø x 5/8" Lg. (**251-5008-00**) ***Ordering Note:*** If **515-5338-00** *is unavailable*, order the individual part(s) actually required.		
5	Compression (Return) Spring	1	266-5020-00

Nº	'PLUNGER COIL PART NAME	QTY.	SPI PART Nº
6	Autoplunger Coil Bracket Assembly	1	515-6527-00
	Items 1 & 6 are secured below the P/F by: #8 X 1/2" HWH AB (Zc.) (Qty. 9) (234-5101-00)		
7	Coil Retainer Bracket	1	535-5203-03
	Item 7 is secured to Item 6 by: #8-32 X 1/4" PPH MS (Sems) Zinc (Qty. 2) (232-5300-00)		
8	Coil, 24-940	1	090-5036-00B
	Coil has a Diode (1N4004) (112-5003-00) positioned @ bot. (below lugs opposite windings).		
9	Coil Sleeve	1	545-5031-00
	Ordering Note: If either **500-6091-00** ***or*** **500-6092-02** *are unavailable*, order the individual part(s) actually required.		

Take Note:

↻ **Coil Note:** ↻ Either -00**B** *or* -00**T** can be used for coil replacements. *B/T listed is preferable for easier diode access & may differ on game.*

Ordering Note: For **Items 1-5** assembled, use the Assembly Part Number, **500-6091-00**. For **Items 6-9** assembled, use the Assembly PN, **500-6092-02**; or order the individual part(s) actually required.

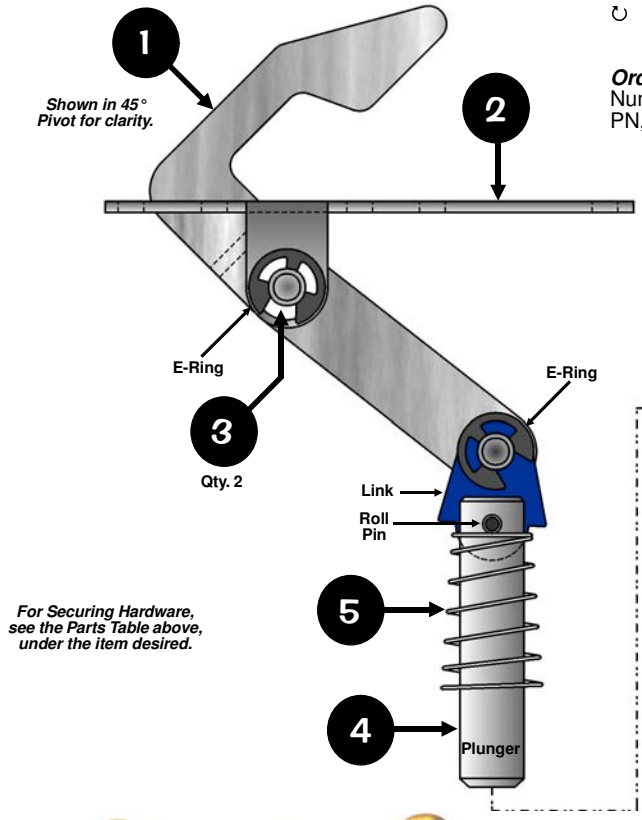

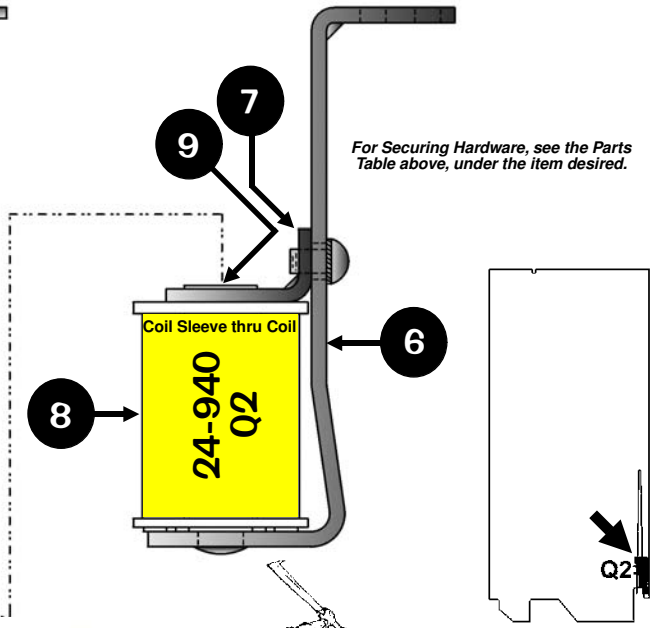

4-Ball Trough Assembly, 500-6318-24 (Items 1-13)
and Associated Parts: See Parts Table below.

Ordering Note: Identical to 500-6318-14 with excepttions, see note below Item 13 (Parts Table).

Nº	INDIVIDUAL PART NAME	QTY.	SPI PART Nº
1	Ball Trough Outhole Mounting Bracket	1	515-6580-01
	Item 1 is secured below the playfield by: #8 X 1/2" HWH AB (Zinc) (Qty. 6) (234-5101-00)		
2	Micro Switch **(Roller Actuator, Lite-Force)**	3	180-5119-02
	Item 2 requires: Heat Shrink Tubing 1/8" ø PUI-24 (Qty. 1"/per) (605-5006-00) Switch has a Diode (1N4004) (112-5003-00). *Can be replaced with (1N4001) (112-5001-00).*		
3	Sw. Body Protect Plate *Not Required*	0	535-6539-00
4	Coil Mounting Bracket	1	535-7330-01
	Item 4 is secured to Item 1 by: #8-32 X 3/8" HWH Swage (Sr.) Zinc (Qty. 4) (237-5975-00)		
5	Coil Retaining Bracket	1	535-5203-03
	Item 5 is secured to Item 4 by: #8-32 X 1/4" HWH MS (Serr) Zinc (Qty. 2) (237-5964-01)		
6	Coil, 26-1200	1	090-5044-00B
	Coil has a Diode (1N4004) (112-5003-00) positioned @ bot (below lugs opposite windings).		
7	Coil Sleeve (Short) (Formost #10-7077)	1	545-5076-01
8	Plunger Assembly	1	515-5941-01
	For Individual Items use : Plunger (**530-5210-00**) & Nylon Plunger (**530-5277-01**)		
9	Compression (Return) Spring	1	266-5020-00
10	Rubber Bumper (Grommet)	1	545-5105-00
11	Trough Ball Guide Plate	1	535-7801-00
	Item 11 is secured to Item 1 by: 1/4" X 5/16" X .144" I.D. Spacer Tap. (Qty. 1) (254-5014-03) **and** #2-56 X 1/2" HWH (Ser) UNS #4HD TR3 BO (Qty. 4) (237-5937-02)		
12	Dual OPTO TRANS Board Assembly	1	515-0173-00
13	Dual OPTO REC Board Assembly	1	515-0174-00
	Items 12 & 13 are by: #6-32 X 5/8" HWH Swage (Serr) Zinc (Qty. 3/per) (237-5976-04) ***For Individual Items use :*** Dual OPTO Transmitter Board (Qty. 1) (**520-5173-00**), Dual OPTO Receiver Board (Qty. 1) (**520-5174-00**), OPTO PCB Tube Spacer (Brass) (Qty. 3/per) (**530-5308-02**) **and** OPTO PCB Rubber Grommet (Qty. 3/per) (**545-5518-00**)		

Ordering Note: If **500-6318-24** *is unavailable*, order the individual part(s) actually required. ***This assembly is identical*** to 500-6318-14, -15 or -25 except for the quantity of **Item 2** *(an additional switch & diode is required for the 5-Ball Trough)* **and Item 3**, Swich Body Protect Plates, are not required when using **Item 11** *(req. for Magnet use).*

ASSOCIATED PARTS **ARE NOT INCLUDED** WITH THE ABOVE ASSEMBLY.

Nº	ASSOCIATED PART NAME	QTY.	SPI PART Nº
AP-A	Ball Trough Enter / Exit Scoop	1	535-7329-01
	Item AP-A secured to the playfield by: #8 X 1/2" HWH AB (Zinc) (Qty. 4) (234-5101-00).		
AP-B*	Steel Balls (1-1/16" ø)	4	260-5000-00

Take Note:

* An asterisk (*) indicates item(s) are not noted in the pictorials.

↻ **Coil Note:** ↻ Either -00**B** *or* -00**T** can be used for coil replacements. *B/T listed is preferable for easier diode access & may differ on game.*

For a break-down of parts of Items **12** & **13**, **OPTO Boards** (**515-0173-00** & **515-0174-00**), *see Section **5**, Chapter **4**, **Trough Up-Kicker Dual OPTO Boards Theory of Operation & Schematic**, **Component Layout & Parts**.*

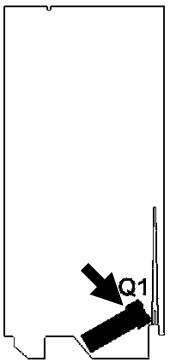

Take Special Note:

Item **AP-A**, Enter / Exit Scoop, **535-7329-01** (*not included with the 4-Ball Trough Assembly),* is shown how it is actually positioned over the 4-Ball Trough Assembly. It is mounted above the playfield.

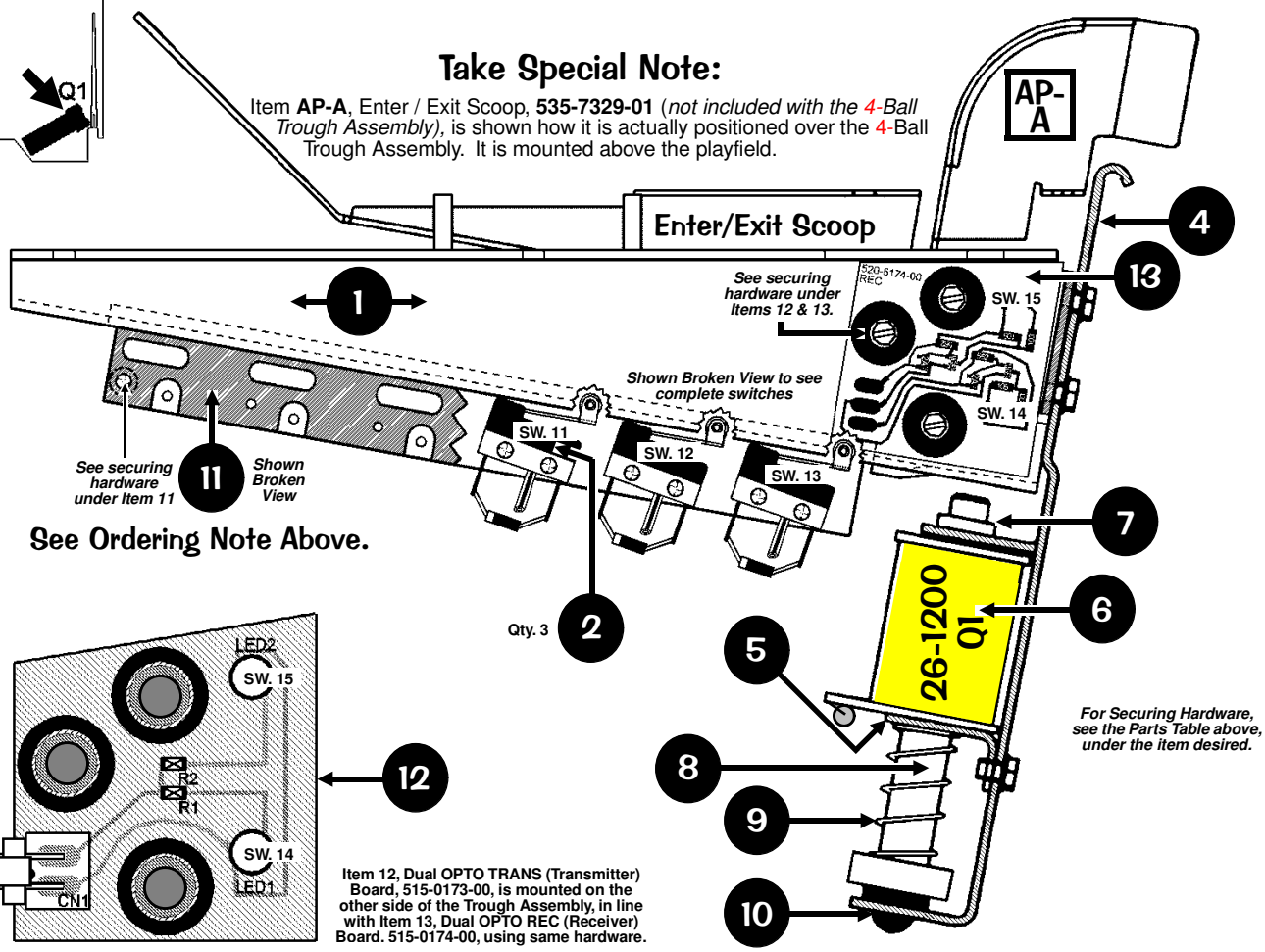

See Ordering Note Above.

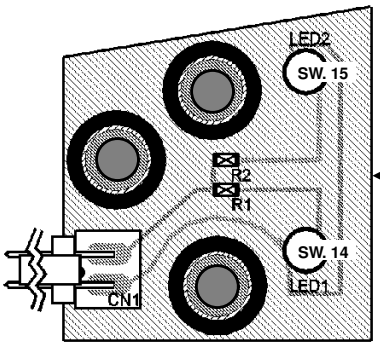

Item 12, Dual OPTO TRANS (Transmitter) Board, 515-0173-00, is mounted on the other side of the Trough Assembly, in line with Item 13, Dual OPTO REC (Receiver) Board. 515-0174-00, using same hardware.

Flipper (Left) Assembly, 500-6543-11 (Items 1-15)
and Assoc. Parts: Yellow Flipper Bat & Shaft Assy., 515-5133-06-06 (Item AP-A/-B)

№	INDIVIDUAL PART NAME	QTY.	SPI PART №
1	Flipper Base Plate (**LEFT**)	1	**See FRP1**
	Item 1 is secured below the playfield by: #10 X 1/2" HWH MS (Serr) Zinc ST (Qty. 8) (237-5949-00) ***Ordering Note:*** *Use Item **FRP1**, see the end of this Parts Table.*		
2	Flipper Bat Bushing (White Plastic)	1	545-5070-00
	Item 2 is secured to Item 1 by: #6-32 X 3/8" HWH Swage (Ser.) Zc. (Qty. 3) (237-5976-02)		
3	Power (End of Stroke) Switch	1	180-5149-00
	Item 3 is secured to Item 1 by: #6-32 X 5/8" HWH Swage (Ser.) Zc. (Qty. 2) (237-5976-04)		
4	Sw. Plate/Spring Return Brkt. (**LEFT**)	1	535-7354-**01**
5	Flipper Return Spring	1	265-5035-00
6	Coil Stop Bracket Sub-Assembly	1	515-6308-01
	Item 6 is secured to Item 1 by: #10-32 X 3/8" SHWH Swage (Serr) Zinc (Qty. 2) (237-5985-00) **and** #10 Split Lock Washer (Qty. 2) (244-5003-00)		
7	Spring Washer (17/32" ID X 3/4" X 1")	1	269-5002-00
8	Coil Support Bracket	1	535-7356-00
	Item 8 is secured to Item 1 by: #8-32 X 3/8" HWH Swage (Ser.) Zc. (Qty. 2) (237-5975-00)		
9	Coil, 22-900 (YEL-YEL) (Left)	1	090-5020-20T
	Coil has a Diode (1N4004) (112-5003-00) positioned @ top (above lugs next to windings).		
10	Coil Sleeve	1	545-5388-00
11	Deflector Pad (Bumper)	1	545-5428-00
12	Flipper Plunger & Link Sub-Assy.	1	515-6304-03
	For Individual Items use : Flipper Plunger with "Flat" (**530-5349-01**) **and** Plunger "Flipper" Link (**545-5611-01**) **and is secured to the Plunger by:** Bushing, .16" ø ID X .281" ø OD X .187" (Qty. 1) (530-5532-00) **and** Spirol Pin ø 5/32" X 3/4" Lg. (Qty. 1) (251-5015-02)		

№	INDIVIDUAL PART NAME	QTY.	SPI PART №
13	Crank Bar	1	530-5070-02
	Item 13 requires: Bushing, .192" ø ID X .312" ø OD X .195" (Qty. 1) (530-5139-00)		
14	® Switch Actuator (**LEFT**) Sub-Assy.	1	515-7257-**01**
	For Individual Items use : Actuator & Spring Bracket (**LEFT**) (**530-9038-01**) **and** ® Switch Actuator (White Plastic) (**545-5612-00**) **and is secured to the Bracket by:** Rivet, 1/8" ø X 1/4" Lg. (Qty. 1) (249-5003-00)		
15	Set Screw: #10-32 X 3/4" Socket Hd.	2	237-6144-00
	Item 15 requires: #10-32 Nylon Stop Nut (Qty. 1 *Flipper Link Side Only*) (240-5203-00) **Tool Required for Item 15: 5/32" or 4mm Allen Wrench**		

Flipper Rebuild Parts for Easier Installation, $ave $:

FRP1	**Flipper Base Plate Kit (LEFT)** *Includes Item 1 pre-threaded, with the Securing Hardware for Items 2, 3, 6 & 8.*	515-6617-**01**
FRP2	**Plunger, Link & Crank (LEFT) Assy.** *Includes above Items 12, 13, 14 and 15 and is pre-assembled.*	515-7203-**01**
FRP3	**Flipper (LEFT) Rebuild Kit** *Same as **FRP2**, but also includes above Items 6 & 10.*	500-6307-**10**

ASSOCIATED PARTS **ARE NOT INCLUDED** WITH THE ABOVE ASSEMBLY.

№	ASSOCIATED PART NAME	QTY.	SPI PART №
AP-A	**YELLOW** Flipper Bat & Shaft (Plain) (Non-Knurled End) Assembly	1	515-5133-06-06
AP-B	Large Flipper **BLACK** Rubber Ring	1	545-5277-00

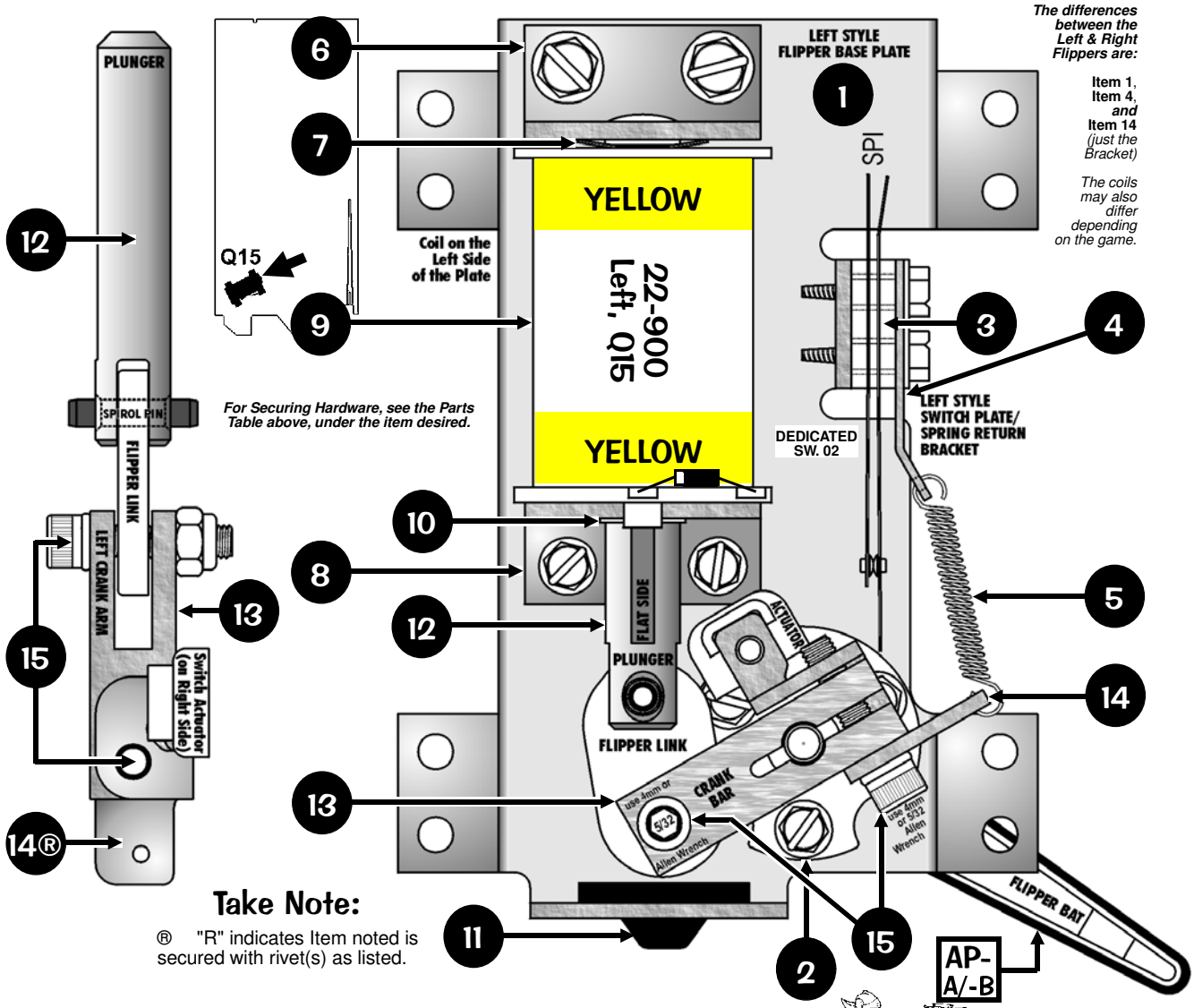

The differences between the Left & Right Flippers are:

Item 1, Item 4, and Item 14 *(just the Bracket)*

The coils may also differ depending on the game.

For Securing Hardware, see the Parts Table above, under the item desired.

Take Note:

® "R" indicates Item noted is secured with rivet(s) as listed.

*** To Order the Flipper (Left) Rebuild Kit ask for Part Nr.: 500-6307-10 (includes Items 6, 10, 12, 13, 14 & 15)**

Flipper (Right) Assembly, 500-6543-01 (Items 1-15)
and Assoc. Parts: Yellow Flipper Bat & Shaft Assy., 515-5133-06-06 (Item AP-A/-B)

№	INDIVIDUAL PART NAME	QTY.	SPI PART №
1	Flipper Base Plate (**RIGHT**)	1	**See FRP1**
	Item 1 is secured below the playfield by: #10 X 1/2" HWH MS (Serr) Zinc ST (Qty. 8) (237-5949-00) ***Ordering Note:*** *Use Item **FRP1**, see the end of this Parts Table.*		
2	Flipper Bat Bushing (White Plastic)	1	545-5070-00
	Item 2 is secured to Item 1 by: #6-32 X 3/8" HWH Swage (Ser.) Zc. (Qty. 3) (237-5976-02)		
3	Power (End of Stroke) Switch	1	180-5149-00
	Item 3 is secured to Item 1 by: #6-32 X 5/8" HWH Swage (Ser.) Zc. (Qty. 2) (237-5976-04)		
4	Sw. Plate/Spring Return Brkt. (**RIGHT**)	1	535-7354-**00**
5	Flipper Return Spring	1	265-5035-00
6*	Coil Stop Bracket Sub-Assembly	1	515-6308-01
	Item 6 is secured to Item 1 by: #10-32 X 3/8" SHWH Swage (Serr) Zinc (Qty. 2) (237-5985-00) **and** #10 Split Lock Washer (Qty. 2) (244-5003-00)		
7	Spring Washer (17/32" ID X 3/4" X 1")	1	269-5002-00
8	Coil Support Bracket	1	535-7356-00
	Item 8 is secured to Item 1 by: #8-32 X 3/8" HWH Swage (Ser.) Zc. (Qty. 2) (237-5975-00)		
9	Coil, 22-900 (YEL-YEL) (Right)	1	090-5020-20T
	Coil has a Diode (1N4004) (112-5003-00) positioned @ top (above lugs next to windings).		
10	Coil Sleeve	1	545-5388-00
11	Deflector Pad (Bumper)	1	545-5428-00
12	Flipper Plunger & Link Sub-Assy.	1	515-6304-03
	For Individual Items use : Flipper Plunger with "Flat" (**530-5349-01**) **and** Plunger "Flipper" Link (**545-5611-01**) **and is secured to the Plunger by:** Bushing, .16" ø ID X .281" ø OD X .187" (Qty. 1) (530-5532-00) **and** Spirol Pin ø 5/32" X 3/4" Lg. (Qty. 1) (251-5015-02)		
13	Crank Bar	1	530-5070-02
	Item 13 requires: Bushing, .192" ø ID X .312" ø OD X .195" (Qty. 1) (530-5139-00)		
14	® Switch Actuator (**RIGHT**) Sub-Assy.	1	515-7257-**00**
	For Individual Items use : Actuator & Spring Bracket (**RIGHT**) (**530-9038-00**) **and** ® Switch Actuator (White Plastic) (**545-5612-00**) **and is secured to the Bracket by:** Rivet, 1/8" ø X 1/4" Lg. (Qty. 1) (249-5003-00)		
15	Set Screw: #10-32 X 3/4" Socket Hd.	2	237-6144-00
	Item 15 requires: #10-32 Nylon Stop Nut (Qty. 1 *Flipper Link Side Only*) (240-5203-00) **Tool Required for Item 15: 5/32" or 4mm Allen Wrench**		

Flipper Rebuild Parts for Easier Installation, $ave $:

FRP1	**Flipper Base Plate Kit (RIGHT)** *Includes Item 1 pre-threaded, with the Securing Hardware for Items 2, 3, 6 & 8.*	515-6617-**00**
FRP2	**Plunger, Link & Crank (RIGHT) Assy.** *Includes above Items 12, 13, 14 and 15 and is pre-assembled.*	515-7203-**00**
FRP3	**Flipper (RIGHT) Rebuild Kit** *Same as **FRP2**, but also includes above Items 6 & 10.*	500-6307-**00**

ASSOCIATED PARTS **ARE NOT INCLUDED** WITH THE ABOVE ASSEMBLY.

№	ASSOCIATED PART NAME	QTY.	SPI PART №
AP-A	**YELLOW** Flipper Bat & Shaft (Plain) (Non-Knurled End) Assembly	1	515-5133-06-06
AP-B	Large Flipper **BLACK** Rubber Ring	1	545-5277-00

* To Order the Flipper (Right) Rebuild Kit ask for Part Nr.: 500-6307-00 (includes Items 6, 10, 12, 13, 14 & 15)

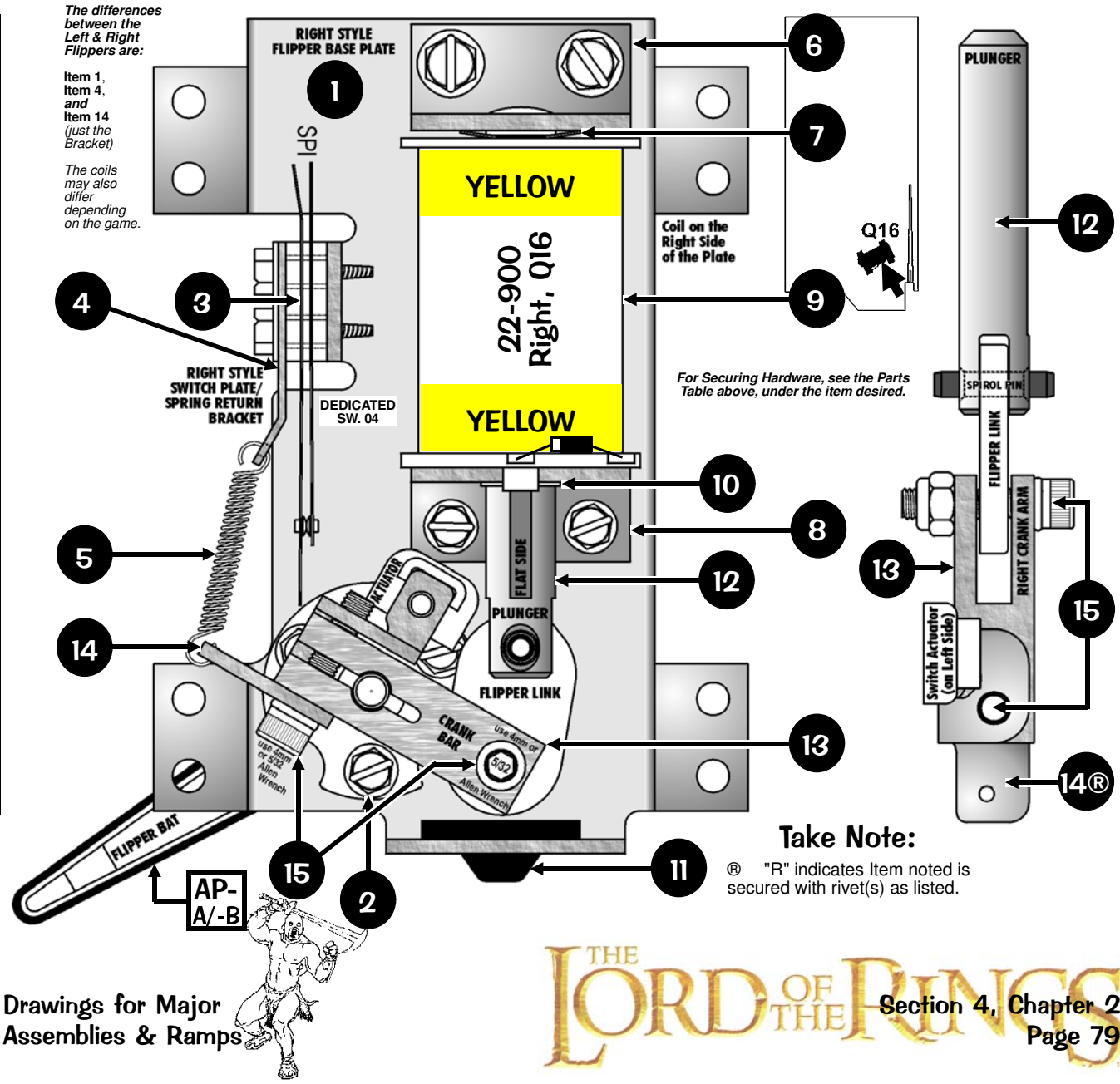

Take Note:

® "R" indicates Item noted is secured with rivet(s) as listed.

Diverter (3-Legged Flipper, Left) Assembly, 500-6543-32-80 (Items 1-15)
and Associated Part: Diverter Gate & Shaft Assembly, 515-7348-00 (Item AP-A)

№	INDIVIDUAL PART NAME	QTY.	SPI PART №
1	Diverter Base Plate (**Lt. 3-Legged**)	1	**See FRP1-80**
	Item 1 is secured below the playfield by: #10 X 1/2" HWH MS (Serr) Zinc ST (Qty. 8) (237-5949-00) ***Ordering Note:*** *Use Item **FRP1-80**, see the end of this Parts Table.*		
2	Flipper Bat Bushing (White Plastic)	1	545-5070-00
	Item 2 is secured to Item 1 by: #6-32 X 3/8" HWH Swage (Ser.) Zc. (Qty. 3) (237-5976-02)		
3	¼" X ⅜" Spacer Gray	2	254-5000-02
	Item 3 is secured to Item 1 by: #6-32 X 5/8" HWH Sw. (Ser.) Zc. (Qty. 1/per) (237-5976-04)		
4	Sw. Plate/Spring Return Brkt. (**LEFT**)	1	535-7354-**01**
5	Flipper Return Spring	1	265-5035-00
6	Coil Stop Bracket Sub-Assembly	1	515-6308-01
	Item 6 is secured to Item 1 by: #10-32 X 3/8" SHWH Swage (Serr) Zinc (Qty. 2) (237-5985-00) **and** #10 Split Lock Washer (Qty. 2) (244-5003-00)		
7	Spring Washer (17/32" ID X 3/4" X 1")	1	269-5002-00
8	Coil Support Bracket	1	535-7356-00
	Item 8 is secured to Item 1 by: #8-32 X 3/8" HWH Swage (Ser.) Zc. (Qty. 2) (237-5975-00)		
9	Coil, 22-1080 (YEL-GRN)	1	090-5032-00T
	Coil has a Diode (1N4004) (112-5003-00) positioned @ top (above lugs next to windings).		
10	Coil Sleeve	1	545-5388-00
11	Deflector Pad (Bumper)	1	545-5428-00
12	Flipper Plunger & Link Sub-Assy.	1	515-6304-03
	For Individual Items use : Flipper Plunger with "Flat" (**530-5349-01**) **and** Plunger "Flipper" Link (**545-5611-01**) **and is secured to the Plunger by:** Bushing, .16" ø ID X .281" ø OD X .187" (Qty. 1) (530-5532-00) **and** Spirol Pin ø 5/32" X 3/4" Lg. (Qty. 1) (251-5015-02)		
13	Crank Bar	1	530-5070-02
	Item 13 requires: Bushing, .192" ø ID X .312" ø OD X .195" (Qty. 1) (530-5139-00)		
14	® Switch Actuator (**LEFT**) Sub-Assy.	1	515-7257-**01**
	For Individual Items use : Actuator & Spring Bracket (**LEFT**) (**530-9038-01**) **and** ® Switch Actuator (White Plastic) (**545-5612-00**) **and is secured to the Bracket by:** Rivet, 1/8" ø X 1/4" Lg. (Qty. 1) (249-5003-00)		
15	Set Screw: #10-32 X 3/4" Socket Hd.	2	237-6144-00
	Item 15 requires: #10-32 Nylon Stop Nut (Qty. 1 *Flipper Link Only*) (240-5203-00) **Tool Required for Item 15: 5/32" or 4mm Allen Wrench**		

Flipper Rebuild Parts for Easier Installation, $ave $:

FRP1-80	**Flipper Base Plate Kit (Left, 3-Legged)** *Includes Item 1 (Modified : 1-Leg Cut-Off, 535-7275-01-80) pre-threaded, with the Securing Hardware for Items 2, 3, 6 & 8.*	**515-6617-01-80**
FRP2	**Plunger, Link & Crank (LEFT) Assy.** *Includes above Items 12, 13, 14 and 15 and is pre-assembled.*	515-7203-**01**
FRP3	**Flipper (LEFT) Rebuild Kit** *Same as **FRP2**, but also includes above Items 6 & 10.*	500-6307-**10**

ASSOCIATED PART **IS NOT INCLUDED** WITH THE ABOVE ASSEMBLY.

№	ASSOCIATED PART NAME	QTY.	SPI PART №
AP-A	Diverter Gate & Shaft Assembly	1	515-7348-00

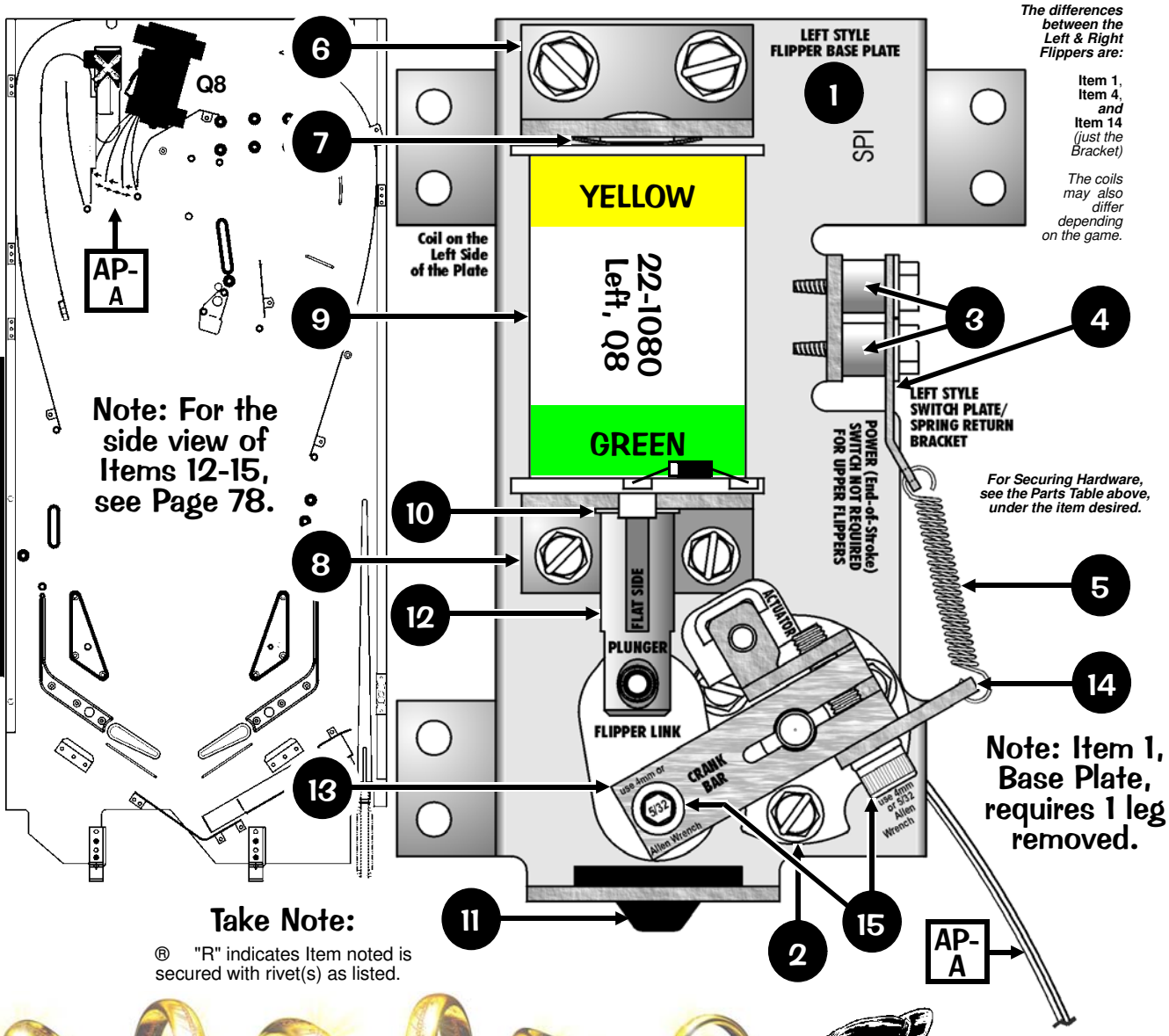

The differences between the Left & Right Flippers are:

Item 1, Item 4, and Item 14 *(just the Bracket)*

The coils may also differ depending on the game.

For Securing Hardware, see the Parts Table above, under the item desired.

Note: For the side view of Items 12-15, see Page 78.

Note: Item 1, Base Plate, requires 1 leg removed.

Take Note:

® "R" indicates Item noted is secured with rivet(s) as listed.

*** To Order the Flipper (Left) Rebuild Kit ask for Part Nr.: 500-6307-10 (includes Items 6, 10, 12, 13, 14 & 15)**

Diverter Gate Adjustment Procedure

This adjustment procedure is important. Unlike adjusting your flipper bats, adjusting the gate is done opposite. With the **Power Turned OFF** and the *Playfield raised, at rest against the Backbox, perform the following:*

Step 1: Under the Playfield, using a 5/32" Allen Wrench, loosen the Set-Screw on the Crank Bar *just enough so that the Diverter Paddle can move with a gentle amount of force.* **Reference Fig. 1-A**.

Step 2: Above the Playfield, position the Diverter Paddle to the Right Side Flat Rail so they touch *(opening the gate to the Left Orthanc Tower).* **Ref. Fig. 2**. With your finger, hold the gate in this position until Step 3 is performed.

Step 3: Under the Playfield, push the Diverter Coil Plunger into the Coil Sleeve. **Reference Fig. 1-B**. With your finger, continue holding in the plunger and release the Diverter Gate (**Fig. 2**) to perform *Step 4*. If the Gate moves, refer to *Step 1* and retighten just enough to hold in position (**Fig. 2**).

Step 4: Tighten the Set-Screw on the Crank Bar. **Reference Fig. 1-A**.

Step 5: Check above the playfield to ensure the Diverter Paddle Gate in the "Rest Position" is as close to the Left Flat Rail as possible without touching it. **Reference Fig. 3.**

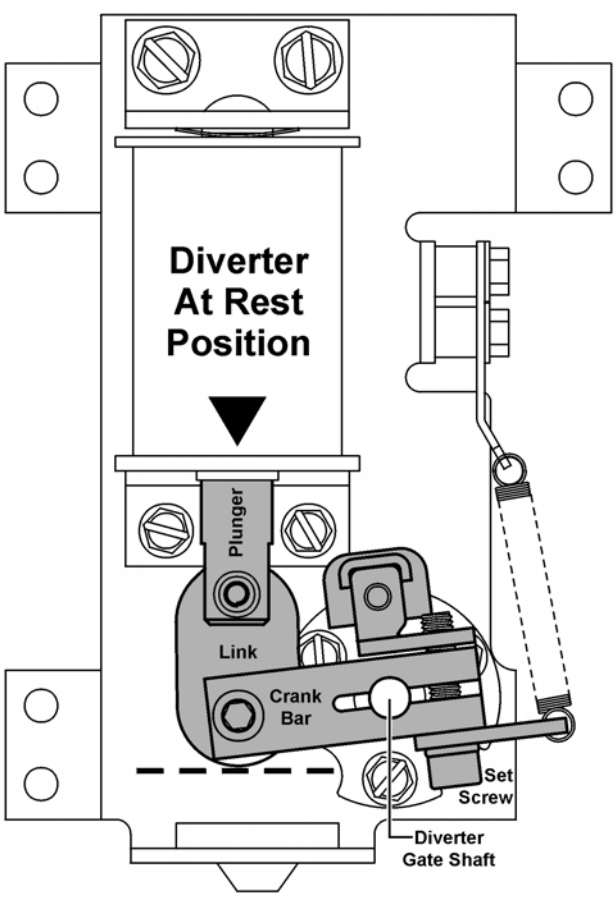

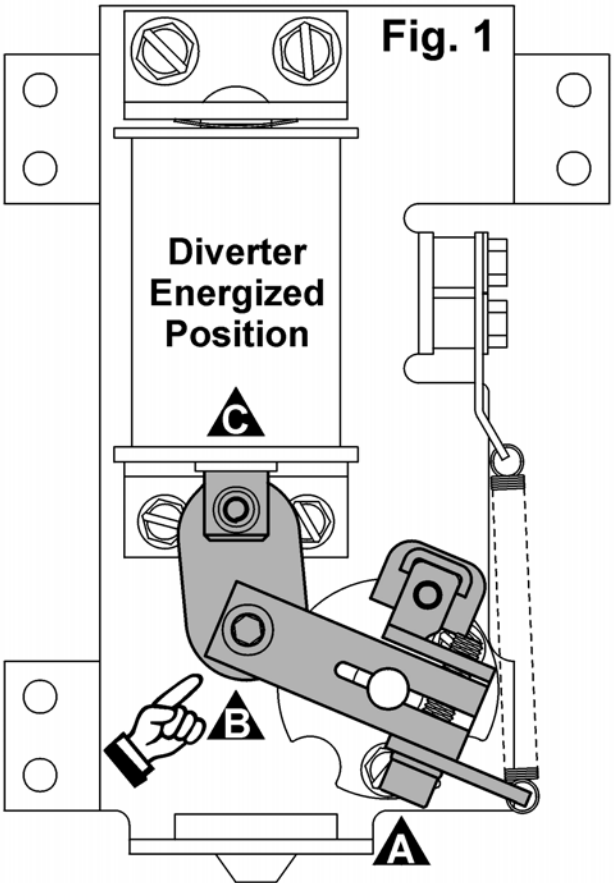

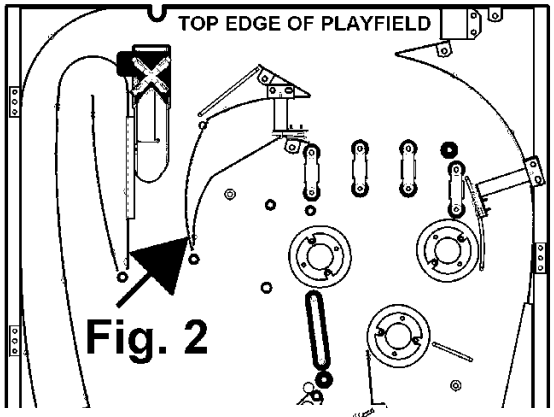

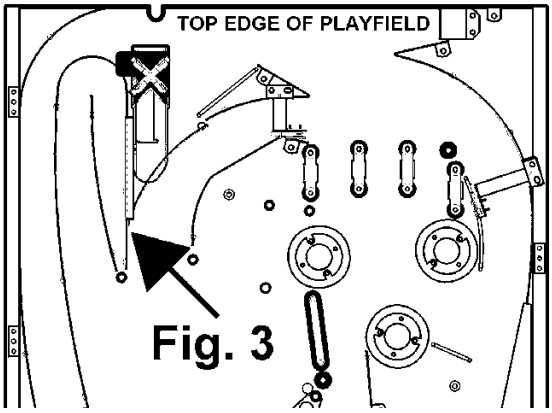

Ball Deflector Assembly (Upper Left Orbit), 500-6657-03 (Items 1-7)

When energized, it deflects the pinball into the Orthanc Tower VUK (Page 88).

№	INDIVIDUAL PART NAME	QTY.	SPI PART №
1	Ball Deflector Coil Mounting Bracket	1	535-9248-00
Item 1 is secured below the playfield by: #8 X 1/2" PRH AB (Zinc) (Qty. 3) (237-5101-00)			
2	Coil Retaining Bracket	2	535-5203-03
Item 2 is secured by: #8-32 X 1/4" PPH MS (Sems) Zinc (Qty. 2/per) (232-5300-00)			
3	Coil, 26-1200	1	090-5044-00B
Coil has a Diode (1N4004) (112-5003-00) positioned @ bot (below lugs opposite windings).			
4	Coil Sleeve *(with Extension)*	1	545-5847-00
5	Plunger **(with Rubber Bumper)** Assy.	1	515-7089-01
For Individual Items use : Plunger (**530-5210-00**) **and** Plunger Tip (**530-5559-01**). **The Plunger Tip is secured to the Plunger by:** Roll Pin 1/8" ø x 3/8" Lg. (Qty. 1) (251-5007-04)			
6	Compression (Relay) Spring	1	266-5022-01
7	#10-32 Adj. Spindle Stop w/Rubber Tip	1	280-5014-00
Item 7 is secured by: #10-32 Keps Nut (Qty. 1) (240-5208-00)			

Ordering Note: If **500-6657-03** *is unavailable*, order the individual part(s) actually required.

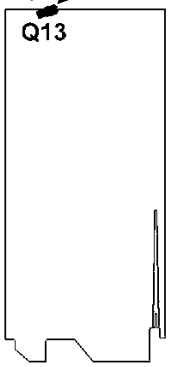

26-1200
Q13

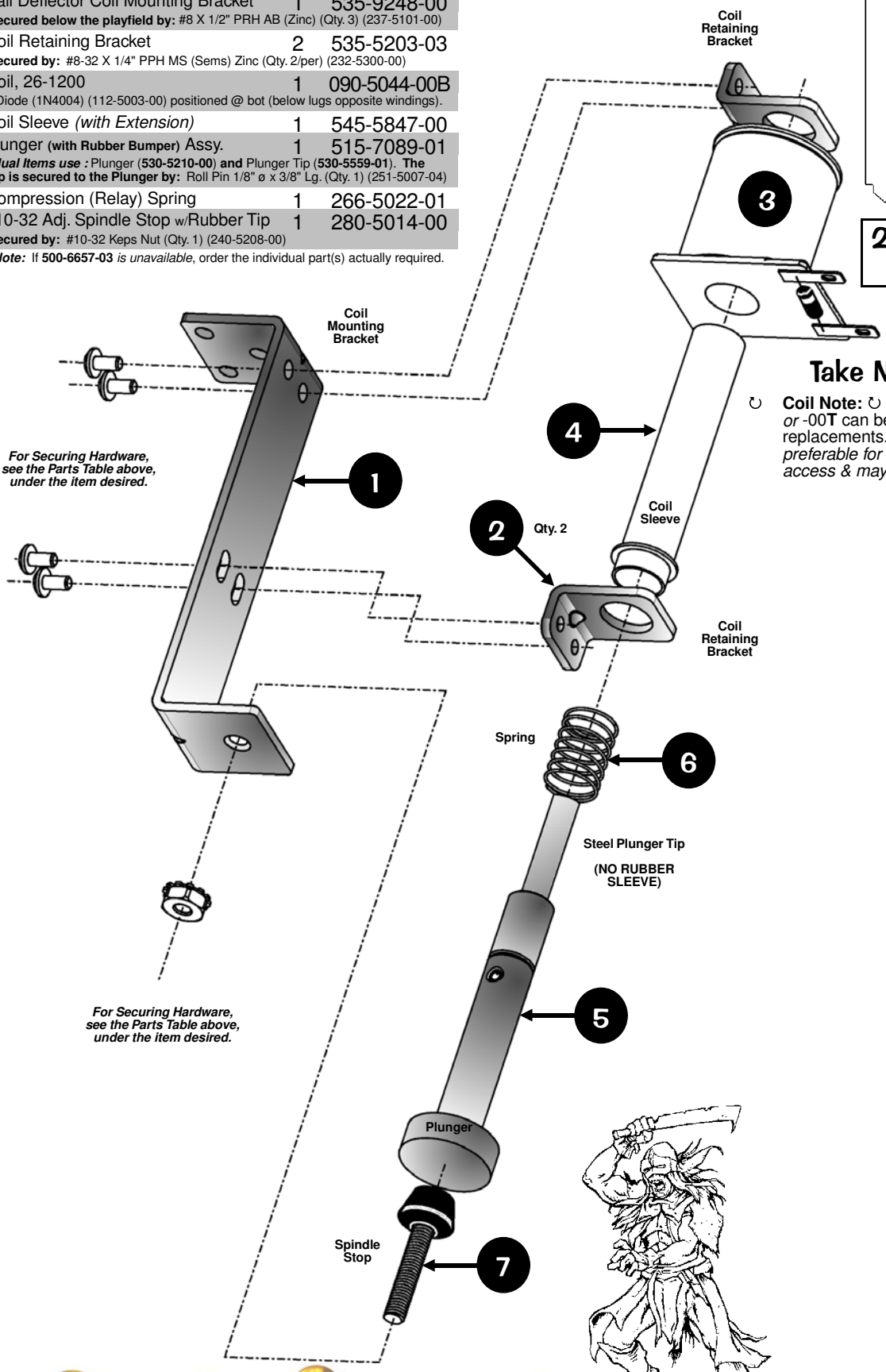

Take Note:

↻ **Coil Note:** ↻ Either -00**B** *or* -00**T** can be used for coil replacements. *B/T listed is preferable for easier diode access & may differ on game.*

Bumper Top Assemblies, 515-6459-08 (Qty. 3) (Items 1-5), Bumper Bottom Assy., 515-6459-04 (Qty. 3) (Items 6-13), Bumper Switch Assy., 515-6459-03 (Qty. 3) (Items 14-17) and Associated Parts: See Parts Table below.

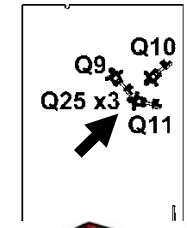

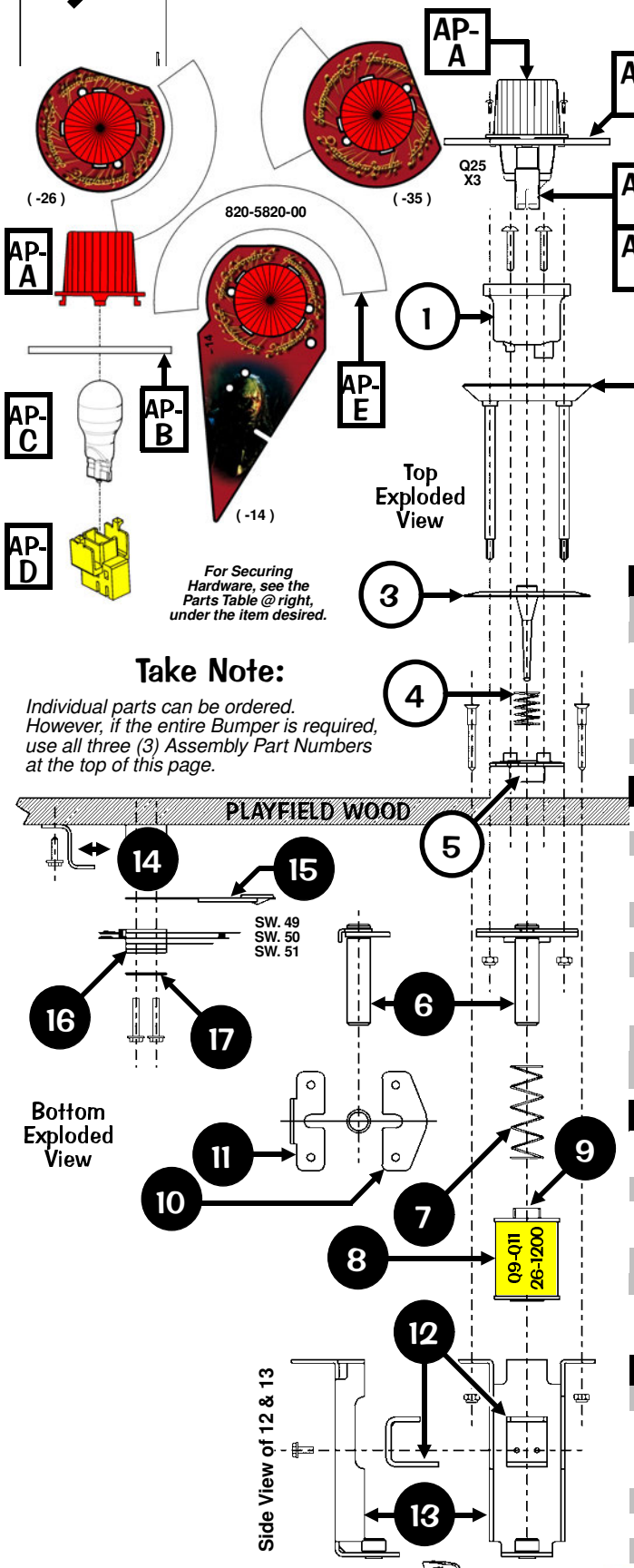

For Securing Hardware, see the Parts Table @ right, under the item desired.

Take Note:

Individual parts can be ordered. However, if the entire Bumper is required, use all three (3) Assembly Part Numbers at the top of this page.

Take Note:

Coil Note: ↻ Either -00**B** *or* -00**T** can be used for coil replacements. *B/T listed is preferable for easier diode access & may differ on game.*

№	BUMPER TOP PART NAME	QTY.	SPI PART №
1	Bumper Body	1	545-5197-00
Item 1 is secured by: #5 X 7/8" PRH AB (Zinc) (Qty. 2) (237-5826-00)			
2	Ring Assembly	1	515-5085-00
Item 2 is secured by: #6-32 Nylon Stop Nut (Qty. 2) (240-5005-00)			
3	Bumper Skirt	1	545-5607-00
4	Bumper Skirt Compression Spring	1	266-5048-00
5	Bumper Base	1	545-5195-00

№	BUMPER BOTTOM PART NAME	QTY.	SPI PART №
6	Plunger	1	530-5348-00
7	Compression (Return) Spring	1	266-5047-00
8	Coil, 26-1200	1	090-5044-00T
Coil has a Diode (1N4004) (112-5003-00) positioned @ top (above lugs next to windings).			
9	Coil Sleeve	1	545-5031-00
10	Fiber Yoke	1	545-5609-00
11	Metal Yoke	1	535-7346-00
12	Metal Yoke Stop	1	535-7347-00
Item 12 is secured by: #6-32 X 1/4" HWH Swage (Serr.) Zinc (Qty. 2) (237-5976-01)			
13	Coil Bracket Welded Assembly	1	515-5939-00
Item 13 is secured by: #6-32 X 1-3/16" Spiral Fin Shank (Qty. 3) (237-5957-00) **and** #6-32 Nylon Stop Nut (Qty. 3) (240-5005-00)			

№	BUMPER SWITCH PART NAME	QTY.	SPI PART №
14	Switch Bracket	1	535-7342-00
Item 14 is secured by: #8 X 1/2" HWH AB (Zinc) (Qty. 2) (234-5101-00)			
15	Spoon Switch Actuator	1	545-5610-01
16	Bumper Stack (Blade) Switch	1	180-5015-03
Switch has a Diode (1N4004) (112-5003-00). *Can be replaced with (1N4001) (112-5001-00).*			
17	Switch Body Protect Plate	1	535-7344-00
Items 16 & 17 are secured by: #6-32 X 3/4" HWH Swage (Serr) Zc. (Qty. 2) (237-5976-05)			

The Top & Bottom Assemblies are secured together by hardware included in assemblies.

ASSOCIATED PARTS **ARE NOT INCLUDED** WITH THE ABOVE ASSEMBLIES.

№	ASSOCIATED PART NAME	QTY.	SPI PART №
AP-A	Mini-Mars Lite Cover **(Snap-In)** Red	3	550-5030-02
AP-B	***Kit:*** Plastics (Screened) **-14, -26 & -35**	1	803-5000-80
Item AP-B are secured to Item 2 by: #4-40 X 3/8" PFH (Black) (Qty. 2/per) (237-5983-00) ***Note:*** *Individual Plastics (-14, -26 & -35)* ***are not available individually****, ordering of kit is required. For all pieces, see* ***Playfield - Plastics (Screened & Clear) & Decals****, Page* ***67****.*			
AP-C	#906 Wedge Base Bulb (Clear)	3	165-5004-00
AP-D	IDC Snap-On Socket (Yel.) ***No Diode***	3	077-5216-00
AP-E	P/F Bumper Protectors *(trim to fit)*	3	820-5820-00

Slingshot Assemblies, 500-5849-00 (Qty. 2) (Items 1-9)

№	INDIVIDUAL PART NAME	QTY.	SPI PART №
1	Slingshot Bracket Assembly	1	515-5339-01
	Item 1 is secured below the playfield by: #8 X 1/2" HWH AB (Zinc) (Qty. 3) (234-5101-00)		
2	Coil Retaining Bracket	1	535-5203-03
	Item 2 is secured to Item 1 by: #8-32 X 3/8" PPH MS (Sems) (Qty. 2) (232-5301-00)		
3	Coil, 23-800	1	090-5001-00T
	Coil has a Diode (1N4004) (112-5003-00) positioned @ top (above lugs next to windings).		
4	Coil Sleeve	1	545-5031-00
5	Plunger & Link Assembly	1	515-5338-00
	For Individual Items use : Plunger 2" Lg. (**530-5025-01**), Plunger Link (**545-5293-00**) **and** Roll Pin 1/8" ø x 5/8" Lg. (**251-5008-00**) **The Plunger Link is secured to the Riveted Arm by:** Retaining Ring, 1/4" ø Shaft (Qty. 1) (270-5002-00)		
	Ordering Note: If **515-5338-00** *is unavailable*, order the individual part(s) actually required.		
6	Compression (Return) Spring	1	266-5020-00
7	Slingshot Stack (Blade) Switch	2	180-5054-00
	Switch has a Diode (1N4004) (112-5003-00). *Can be replaced with (1N4001) (112-5001-00).*		
8	Switch Body Protect Plate	2	535-5045-00
	Items 7 & 8 are secured to Item 1 by: #6-32 X 5/8" HWH Swage (Qty. 4) (237-5976-04)		
9®	Riveted Arm & Tip Assembly	1	515-5340-01
	For Individual Parts use (requires drilling out rivet & rereviting) : Arm (**515-5341-01**), Kicker Tip (**545-5216-01**) **and** Rivet, 1/8" ø x 1/4" Lg. (**249-5003-00**) **The Riv. Arm is secured to Item 1 by:** Retaining Ring, 1/4" ø Shaft (Qty. 1) (270-5002-00)		
	Ordering Note: If **515-5340-01** *is unavailable*, order the individual part(s) actually required.		

Ordering Note: If **500-5849-00** *is unavailable*, order the individual part(s) actually required.

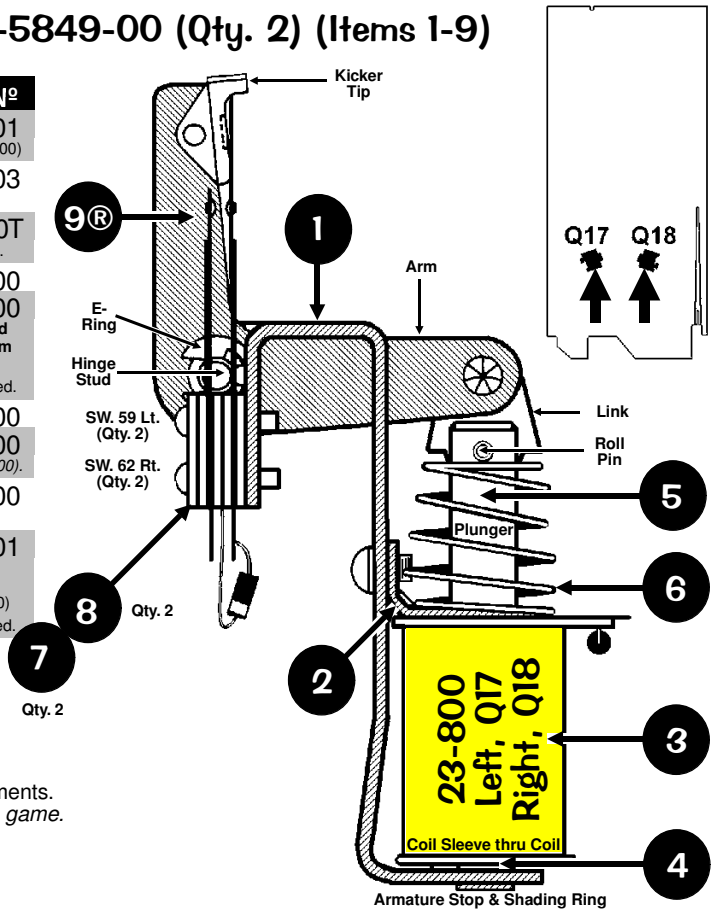

Take Note:

↻ **Coil Note:** ↻ Either -00**B** *or* -00**T** can be used for coil replacements. *B/T listed is preferable for easier diode access & may differ on game.*

® "R" indicates Item noted is secured with rivet(s) as listed.

VUK (Vertical Up-Kicker, Left Style) Assembly, 500-6696-00 (Items 1-10)

Launches ball onto the Center Wire Ramp (Page 92) and exits the Sword Ramp (Page 93).

№	INDIVIDUAL PART NAME	QTY.	SPI PART №
1	VUK Coil Mounting Bracket (**Left** Style)	1	535-8296-**00**
	Item 1 is secured under the playfield by: #8 X 1/2" HWH AB (Zinc) (Qty. 5) (234-5101-00)		
2	Micro Sw. **(Heavy Duty "Y" Flat Actuator)**	1	180-5116-01
3	Switch Body Protect Plate	1	535-6539-00
	Items 2-3 are secured by: #2-56 X 1/2" HWH MS (Serr) Zc TF 3/16" (Qty. 2) (237-5937-02)		
4	Coil Retaining Bracket	1	535-5203-03
	Item 4 is secured by: #8-32 X 1/4" PPH MS (Sems) Zinc (Qty. 2) (232-5300-00)		
5	Coil, 26-1200 ***(Note Lug Position)***	1	090-5044-00B
	Coil has a Diode (1N4004) (112-5003-00) positioned @ bot (below lugs opposite windings).		
6	Coil Sleeve (Short) (Formost #10-7077)	1	545-5076-01
7	Spring Washer, 17/32" ID X 3/4" X 1"	1	269-5002-00
8	Plunger Assembly	1	515-5941-01
	For Individual Items use : Plunger (**530-5210-00**) & Nylon Plunger (**530-5277-01**)		
9	Compression (Relay) Spring	1	266-5020-00
10	Rubber Bumper (Grommet)	1	545-5105-00
	Ordering Note: If **500-6696-00** *is unavailable*, order the individual part(s) actually required.		

This assembly is identical to 500-6290-00 except for the coil, lug & diode position.
If replacing, note position of coil before removing.

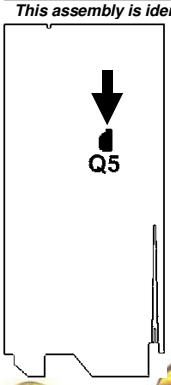

Take Note:

DOTS: *The Switch Diode, 1N4001, is not located on either VUK Assembly (nor included); it's located on a Terminal Strip under the playfield near this assembly. See Section **5**, Chapter **2**, **Playfield Terminal Strips**.., **Page 105**, for more details.*

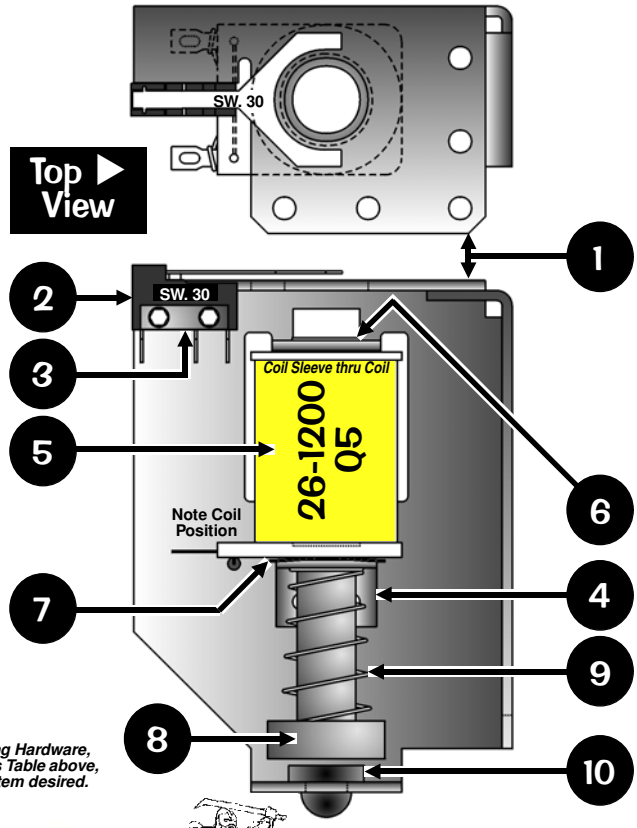

For Securing Hardware, see the Parts Table above, under the item desired.

Exit Scoop, 535-9287-00 (Item 1)
and Assoc. Parts: See Parts Table below. Ball launches from below VUK and is delivered to the Left Wire Ramp (Pg. 92).

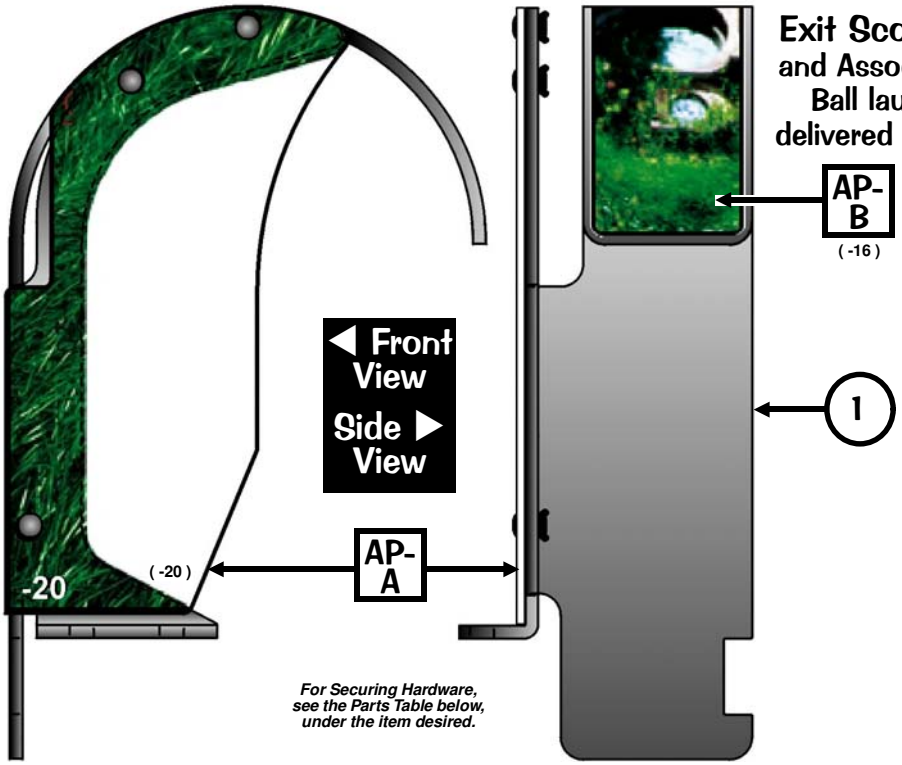

№	INDIVIDUAL PART NAME	QTY.	SPI PART №
1	Exit Scoop	1	535-9287-00
	Item 1 is secured below the playfield by: #8-32 X 1" PPH MS (Zinc) (Qty. 2) (237-5606-00) **and** #8-32 Nylon Stop Nut (Qty. 2) (240-5102-00)		

№	ASSOCIATED PART NAME	QTY.	SPI PART №
AP-A	***Kit:*** Decals (Screened) **-16**	1	802-5000-80
AP-B	***Kit:*** Plastics (Screened) **-20**	1	803-5000-80
	Item AP-B is secured to Item 1 by: Pop Rivet, 1/8" ø X 3/16" Lg. (Qty. 1, bot) (249-5025-01) **and** Rivet, 1/8" ø X 1/4" Lg. (Black) (Qty. 2, top) (249-5003-01)		

Note: *Individual Plastic (-20) & Decal (-16)* ***are not available individually****, ordering of kit is required. For all pieces, see* ***Playfield - Plastics (Screened & Clear) & Decals****, Page* ***67****.*

VUK (Vertical Up-Kicker, Right Style) Assembly, 500-6696-01 (Items 1-10)
Launches ball into the above Exit Scoop onto the Left Wire Ramp (Page 92).

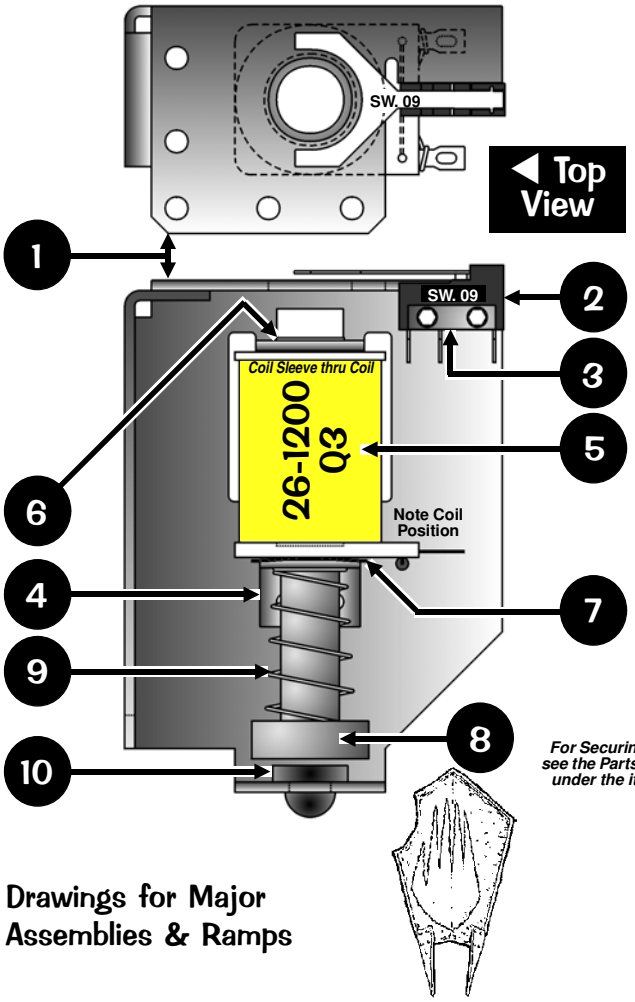

№	INDIVIDUAL PART NAME	QTY.	SPI PART №
1	VUK Coil Mounting Bracket (**Right** Style)	1	535-8296-**01**
	Item 1 is secured under the playfield by: #8 X 1/2" HWH AB (Zinc) (Qty. 3) (234-5101-00)		
2	Micro Sw. **(Heavy Duty "Y" Flat Actuator)**	1	180-5116-01
3	Switch Body Protect Plate	1	535-6539-00
	Items 2-3 are secured by: #2-56 X 1/2" HWH MS (Serr) Zc TF 3/16" (Qty. 2) (237-5937-02)		
4	Coil Retaining Bracket	1	535-5203-03
	Item 4 is secured by: #8-32 X 1/4" PPH MS (Sems) Zinc (Qty. 2) (232-5300-00)		
5	Coil, 26-1200 ***(Note Lug Position)***	1	090-5044-00B
	Coil has a Diode (1N4004) (112-5003-00) positioned @ bot (below lugs opposite windings).		
6	Coil Sleeve (Short) (Formost #10-7077)	1	545-5076-01
7	Spring Washer, 17/32" ID X 3/4" X 1"	1	269-5002-00
8	Plunger Assembly	1	515-5941-01
	For Individual Items use : Plunger (**530-5210-00**) & Nylon Plunger (**530-5277-01**)		
9	Compression (Relay) Spring	1	266-5020-00
10	Rubber Bumper (Grommet)	1	545-5105-00
	Ordering Note: If **500-6696-01** *is unavailable*, order the individual part(s) actually required.		

This assembly is identical to 500-6290-01 except for the coil, lug & diode position.
If replacing, note position of coil before removing.

Take Note:

DOTS: *The Switch Diode, 1N4001, is not located on either VUK Assembly (nor included); it's located on a Terminal Strip under the playfield near this assembly. See Section* ***5****, Chapter* ***2****,* ***Playfield Terminal Strips****..,* ***Page 105****, for more details.*

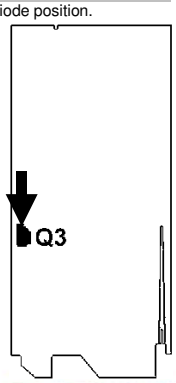

Balrog (Motor & Gate) Individual Parts Only (Items 1-26)

Parts Table (next page) for views on this and the next page.

Works in conjuntion with the Balrog Switch Gate (above the playfield) shown next page.

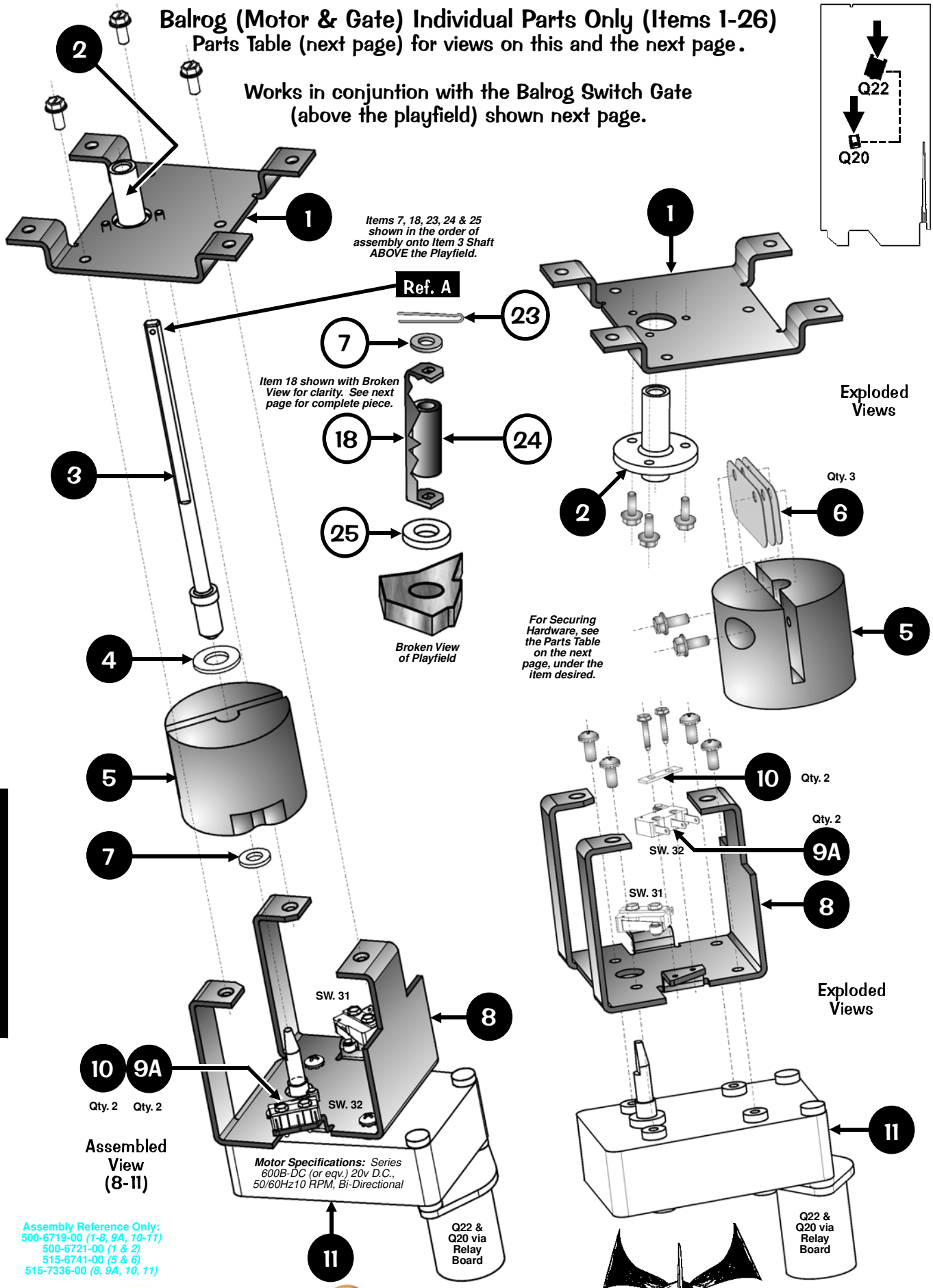

Assembly Reference Only:
500-6719-00 *(1-8, 9A, 10-11)*
500-6721-00 *(1 & 2)*
515-6741-00 *(5 & 6)*
515-7336-00 *(8, 9A, 10, 11)*

Balrog (Motor & Gate) (Items 1-26) Continued

Parts Table below for views on this & prev. page.

№	INDIVIDUAL PART NAME	QTY.	SPI PART №
1	Motor Mounting Plate Bracket	1	535-9347-01
	Item 1 is secured below the playfield by: #10 X 1/2" HWH (Sr.) Zc. (Qty. 4) (237-5949-00) **and is secured to Item 8 by:** #8-32 X 3/8" HWH Swage (Qty. 3) (237-5975-00)		
2	Bushing (Flipper Type) (White Plastic)	1	545-5070-00
	Item 2 is secured to Item 1 by: #6-32 X 3/8" HWH Swage (Ser.) Zc. (Qty. 3) (237-5976-02)		
3	Drive Shaft	1	530-5650-00
	See previous page for Ref. A (Item 18) with assembly order of Items 7, 23, 24 & 25.		
4	Washer (Steel) **.39" ID X .75" OD X .063" Thick**	1	242-5049-00
5	Coupling-Interrupter	1	530-5649-00
6	Clutch (Spring) Plate	3	535-8764-00
	Item 6 is secured to Item 5 by: #8-32 X 3/8" HWH MS Type C (Qty. 2) (237-5903-00)		
7	Washer (Steel) **1/4" ID X 1/2" OD X 1/16" Thick**	2	242-5008-00
8	Motor Mounting Bracket	1	535-9346-01
	Item 8 is secured to Item 11 by: #8-32 X 3/8" PPH MS (Sems) Zinc (Qty. 4) (232-5301-00)		
9A	Micro Switch **(Roller Actuator, Lite Force)**	2	180-5119-02
9B	Micro Switch **(Roller Actuator)**	1	180-5119-00
	Switch has a Diode (1N4004) (112-5003-00). *Can be replaced with (1N4001) (112-5001-00).*		
10	Switch Body Protect Plate	3	535-6539-00
	Items 9 & 10 are secured to Item 8 by: #2-56 X 1/2" HWH (Sr.) (Qty. 2/per) (237-5937-02)		
11	Multi Products Motor 20V DC	1	041-5088-01
12	Balrog (Molded Plastic)	1	545-5083-00
	Item 12 is secured to Item 13 by: #6-32 X 3/4" PPH MS (Sems) Zc. (Qty. 2) (232-5204-00) **and** #6 Washer (Qty. 2) (242-5001-00)		
13	Balrog Mounting Bracket	1	535-9348-00
14	Spring Retainer Bracket	1	535-9391-00
	Items 14 & 16 are secured to Item 12 through 13 by: *Identical Hardware as Item 6.*		
15	Compression Spring (Heavy Duty)	1	266-5076-00
16a	2-Lug Laydown Std. Bayonet Socket	1	077-5100-00
17a	#89 Bulb (Bayonet, Clear)	1	165-5000-89
16b	**2-Lug Laydown Bayonet Socket, Modified**	1	**077-5003-00-80**
17b	**LED (Red) Module Bayonet 12.8v 20-25mA**	1	**112-5023-02**
18	Balrog Gate Welded Bracket	1	515-7333-00
	Item 18 is secured to Item 13 by: #6-32 X 1⅝" PPH MS (Zinc) (Qty. 2) (237-5516-00), #6 Washer (Qty. 2) (242-5001-00) **and** #6-32 Nylon Stop Nut (Qty. 1/per) (240-5005-00)		
19	Switch Mounting Bracket	1	535-7948-01
	Item 19 is secured to Item 18 by: #6-32 X 1/4" HWH Swg. (Sr.) Zinc (Qty. 2) (237-5976-01)		
20	Balrog Protector Bracket	1	535-9398-00
	Item 20 is secured to Item 18 by: #6-32 X 1/4" PPH MS (Sems) Zc. (Qty. 2) (232-5200-00)		
21	1-1/16" 1-Groove Plastic Post (Black)	2	550-5059-00
	Item 21 is secured to Item 18 by: #6-32 X 1½" PFH (Qty. 1/per) (237-5510-01), #6 Washer (Qty. 1/per @ top) (242-5001-00) **and** Item **26** (Qty. 1/per @ top).		
22	Black Rubber Ring, 3/16" I.D.	2	545-5348-01
23	Cotter Pin, 1/16" ø X 1/2" Lg. (Zinc)	1	251-5006-00
24	Bumper BLACK (Rubber Post Sleeve, Tall)	1	545-5308-00
25	Washer (Nylon) .32" X .75" X .13"	1	242-5078-00
26	Hex Spacer, 1⅛" X 1/4" #6-32 Tap (...ends)	2	254-5008-17

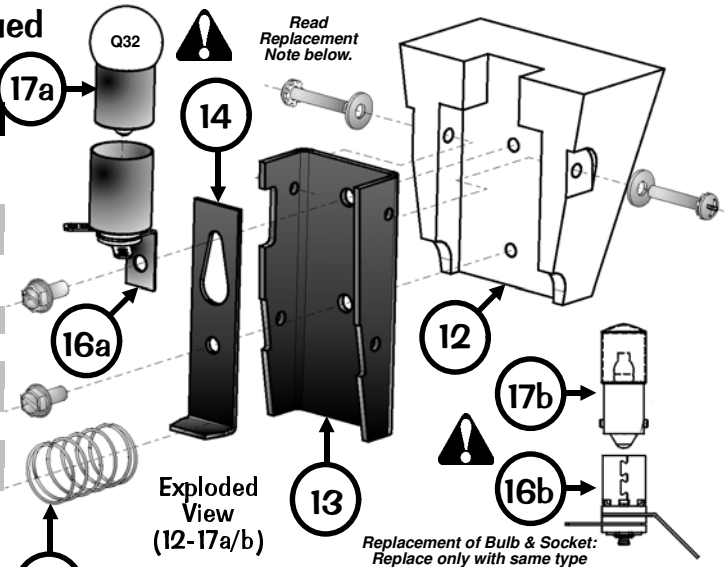

Replacement of Bulb & Socket: Replace only with same type bulb & socket (89 to 89, LED to LED). Wiring is designed specifically with the bulb type in your game. The bulbs & sockets are not easily interchangeable.

For Securing Hardware, see the Parts Table (left), under the item desired.

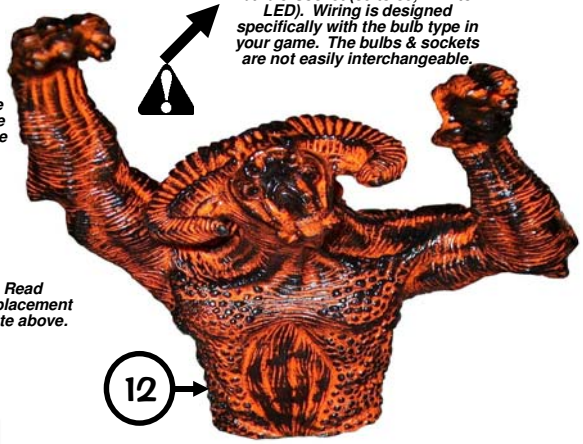

Read Replacement Note above.

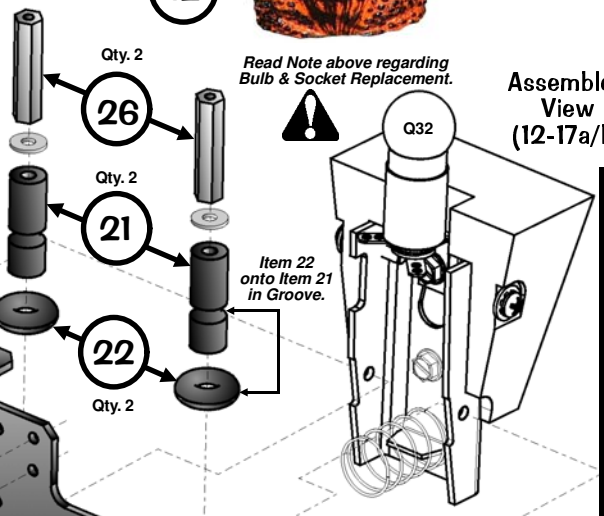

Read Note above regarding Bulb & Socket Replacement.

Assembled View (12-17a/b)

Item 22 onto Item 21 in Groove.

Ref. A

See previous page for the assembly order of Items 7, 18, 23, 24 & 25 onto Item 3, Shaft, ABOVE the Playfield.

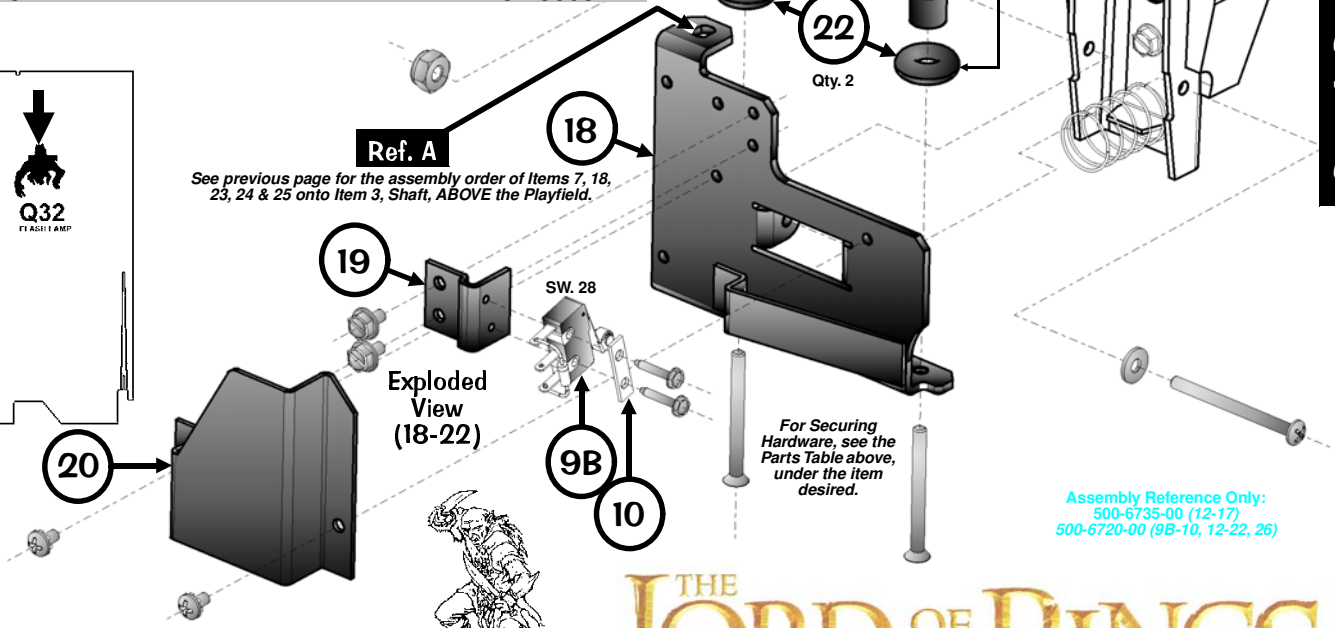

Exploded View (18-22)

For Securing Hardware, see the Parts Table above, under the item desired.

Assembly Reference Only:
500-6735-00 *(12-17)*
500-6720-00 (9B-10, 12-22, 26)

Orthanc Tower, Up-Kicker and Ball Trough (Up-Kicker Tray) Individual Parts Only, (Items 1-13)

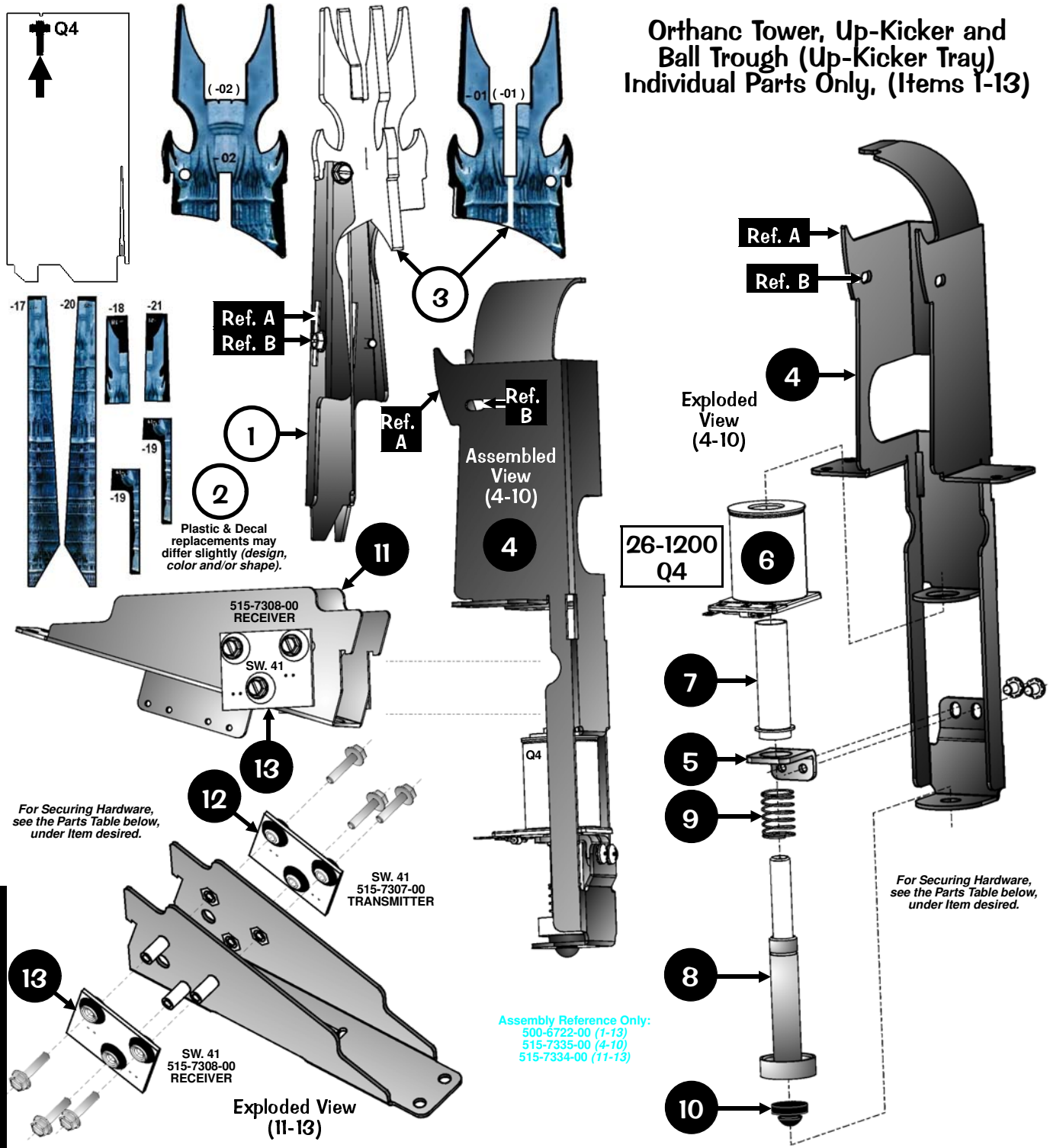

№	INDIVIDUAL PART NAME	QTY.	SPI PART №
1	Orthanc Tower	1	535-9351-00
	Item 1 is secured by slot holes (Ref. A) onto Item 4 and by (Ref. B): #8-32 X 3/8" HWH MS Type C (Qty. 2) (237-5903-00)		
2	***Kit:*** Decals (Screened) **-17 thru -21**	1	802-5000-80
3	***Kit:*** Thick Plastics (Screened) **-01, -02**	1	803-5001-80
	Item 3 is secured to Item 1 by: #8-32 X 3/8" HWH MS Type C (Qty. 1/per) (237-5903-00) ***Note:*** *Individual Decals (-17, -18, -19 [x2], -20 & -21) and Thick Plastics (-01 & -02)* ***are not available individually****, ordering of kit is required. For all pieces, see* ***Playfield - Plastics (Screened & Clear) & Decals****, Page* ***67****.*		
4	Up-Kicker (Frame) Coil Mntg. Bracket	1	535-9350-00
	Item 4 is secured below the playfield by: #8 X 1/2" PRH AB (Zinc) (Qty. 4) (237-5101-00)		
5	Coil Retaining Bracket	1	535-5203-03
	Item 5 is secured by: #8-32 X 1/4" PPH MS (Sems) Zinc (Qty. 2/per) (232-5300-00)		
6	Coil, 26-1200	1	090-5044-00B
	Coil has a Diode (1N4004) (112-5003-00) positioned @ bot (below lugs opposite windings).		

№	INDIVIDUAL PART NAME	QTY.	SPI PART №
7	Coil Sleeve (Short) (Formost #10-7077)	1	545-5076-01
8	Plunger Assembly	1	515-5941-00
	For Individual Items use : Plunger (**530-5210-00**) & Nylon Plunger (**530-5277-01**)		
9	Compression (Relay) Spring	1	266-5022-01
10	Rubber Bumper (Grommet)	1	545-5105-00
11	Ball Trough (Up-Kicker Tray) Bracket	1	535-9349-00
	Item 11 is secured below the playfield by: #8 X 1/2" HWH AB (Zc.) (Qty. 2) (234-5101-00)		
12	Single OPTO TRANS Bd. Assembly	1	515-7307-00
13	Single OPTO REC Board Assembly	1	515-7308-00
	Items 12 & 13 are secured by: #6-32 X 5/8" HWH Swg. (Sr.) Zc. (Qty. 3/per) (237-5976-04) ***For Individual Items use :*** Single OPTO Transmitter Board (Qty. 1) (**520-5230-00**), Single OPTO Receiver Board (Qty. 1) (**520-5231-00**), OPTO PCB Tube Spacer (Brass) (Qty. 3/per) (**530-5308-02**) **and** OPTO PCB Rubber Grommet (Qty. 3/per) (**545-5518-00**)		

Barad-dûr Tilting Tower Individual Parts Only, (Items 1-10)

№	INDIVIDUAL PART NAME	QTY.	SPI PART №
1	Barad-dûr Tower	1	545-5082-00
	Item 1 is secured to Item 2 (@ top) by: Washer, .17" ID X .5" OD X .042" Thick (Qty. 1) (242-5015-00) **and** #6-32 Nylon Stop Nut (Qty. 1) (240-5005-00)		
2	Clevis (Tilt Mech. Brkt.) w/Pem Stud	1	515-7346-00
	Item 2 is secured to Item 8 (Ref. A) by: Roll Pin, 1/8" ø X 1/2" Long, Washer (White Teflon).137" ID X .25" OD X .01" Thick (Qty. 2) (242-5080-00) **and is secured to Item 3 (Ref. B) by:** #6-32 X 1/4" PPH MS (Sems) Zinc (Qty. 2) (232-5200-00)		
3	Bracket, Top (Tilt Mech.)	1	535-9365-00
	Item 3 is secured to Item 4 by: #6-32 X 2" PPH MS (Zinc) (Qty. 1) (237-5513-00), Washer (White Teflon).15" ID X .312" OD X .05" Thick (Qty. 2, 1 each outside bracket) (242-5079-00) **and** #6-32 Nylon Stop Nut (Qty. 1) (240-5005-00)		
4	Tilt Mech. Coil Mounting Bracket	1	535-9364-00
	Item 4 is secured above the P/F by: #6-32 X 5/8" HWH Swage (Serr.) Zinc (Qty. 2) (237-5976-04)		
5	Coil Retaining Bracket	1	535-5203-03
	Item 5 is secured to Item 4 by: #8-32 X 1/4" PPH MS (Sms.) Zc. (Qty. 2/per) (232-5300-00)		
6	Coil, 23-800 (Lugless)	1	090-5001-NL
	Coil has a Diode (1N4004) (112-5003-00) located on a Terminal Strip *(see Take Note below).*		
7	Coil Sleeve (Modified)	1	545-5847-01
8	Pivot Plunger Assembly	1	515-7349-00
	For Individual Items use : Shaft Pivot Plunger (**530-5647-00**) & Extension (**530-5510-00**)		
9	Shaft Head	1	530-5511-00
	Item 9 is secured to Item 8 (@ bot) by: #10-32 X 3/8" PH Truss (Qty. 1) (237-5988-00)		
10	Compression Spring	1	266-5009-00

Take Note:

DOTS: *.The Coil Diode, 1N4004, is not located on this assembly (nor included); it's located on a Terminal Strip under the playfield near this assembly. See Section **5**, Chp. **2**, Playfield Terminal Strips..., Pg. **105**.*

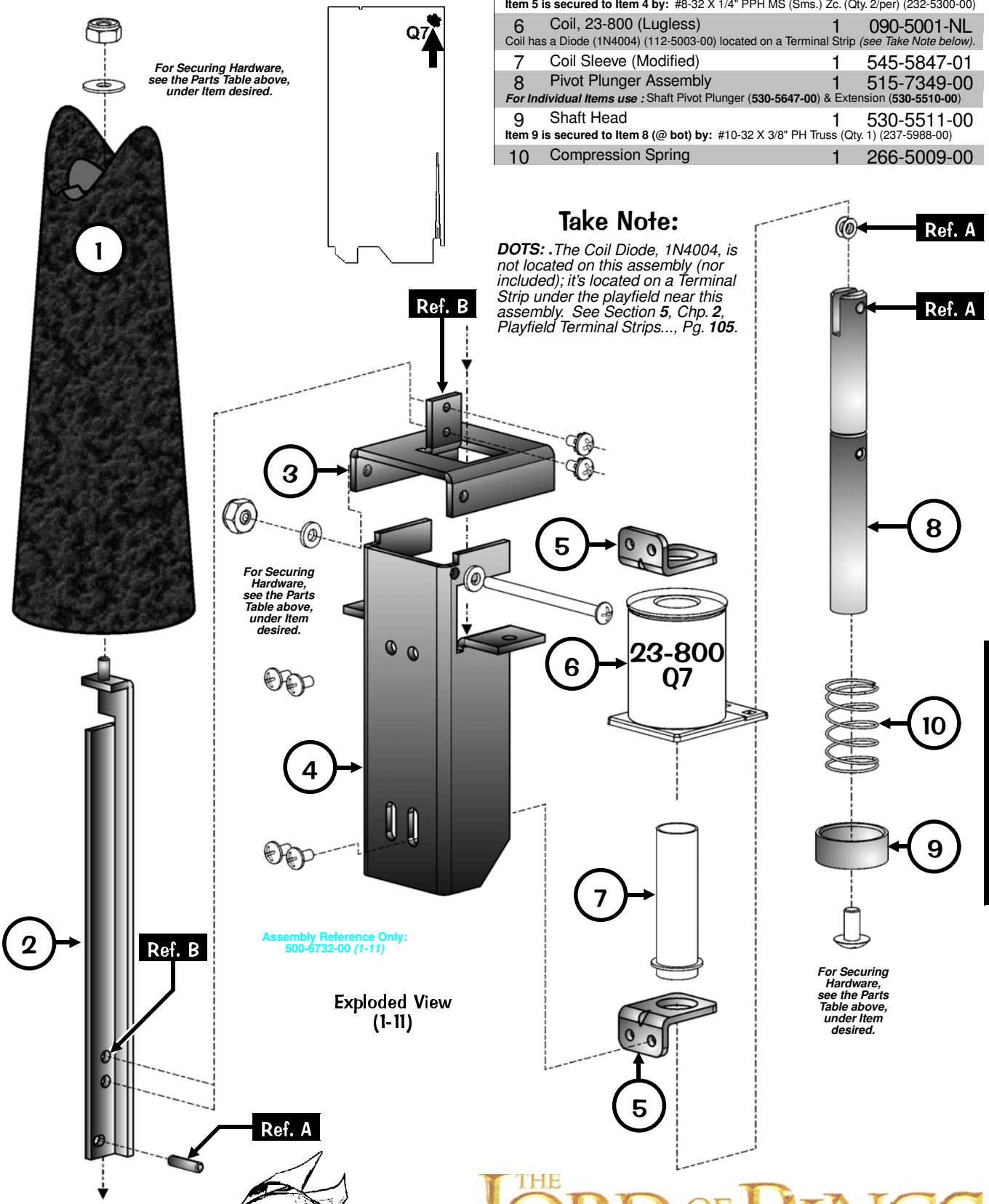

Assembly Reference Only: 500-6732-00 *(1-11)*

Exploded View (1-11)

The Lord of the Rings Playfield Figurines (Characters) Overview

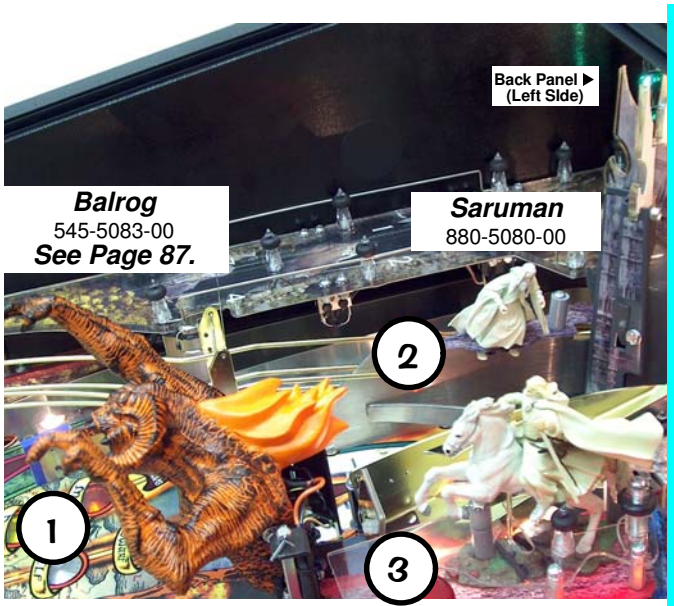

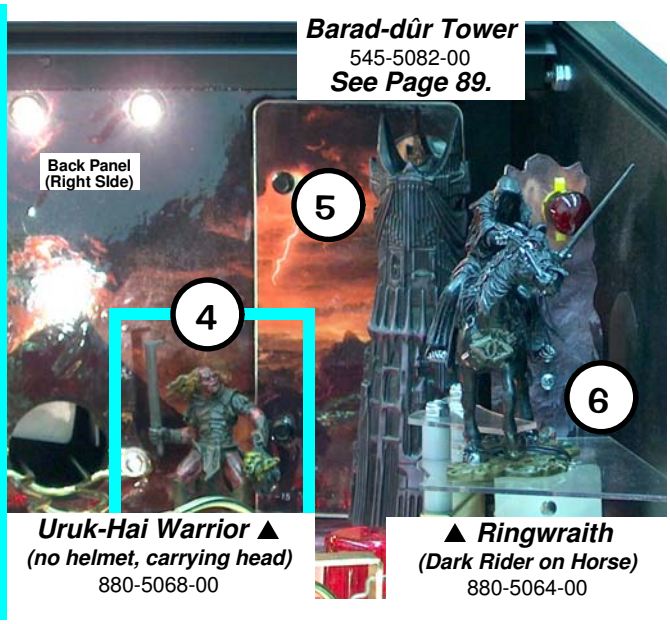

Gandalf the Gray*
(Alternate, Not Shown)
880-5082-00

▲ *Gandalf the White*
(riding Shadowfax)
880-5076-00

▲ *Uruk-Hai Warrior*
(no helmet, carrying head)
880-5068-00

▲ *Ringwraith*
(Dark Rider on Horse)
880-5064-00

* *This game used either Gandalf the Gray or the White and neither can be easily interchanged due to plastics, mounting and hardware. Character depictions in photos may not represent your games. Parts may change without notice due to ball-traps.*

Uruk-Hai Warrior
(with helmet on) ▼
880-5070-00

▲ *Aragorn*
(riding Horse)
880-5075-00

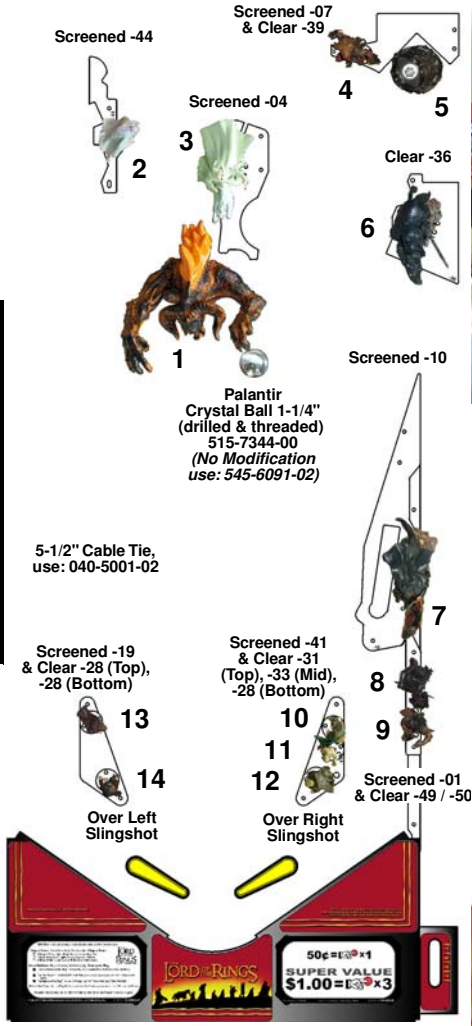

▲ *Uruk Hai Mauhur*
(no helmet)
880-5069-00

Pippin ▼
880-5071-00

Note: *Individual Plastics (Screened & Clear)* ***are not available individually,*** *ordering of kit is required. For all pieces, see* ***Playfield - Plastics (Screened & Clear) & Decals****, Page* ***67****.*

Frodo ▼
880-5072-00

▼ ***Merry***
880-5078-00

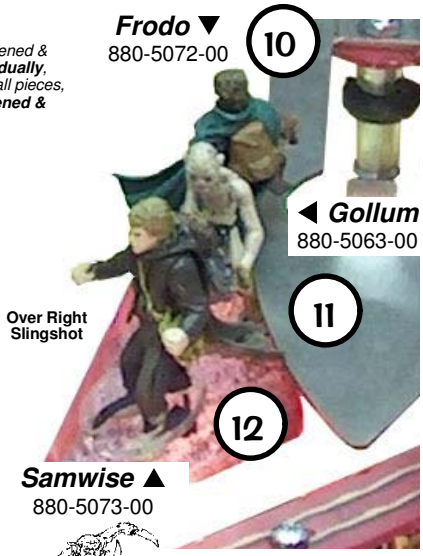

◀ ***Gollum***
880-5063-00

Samwise ▲
880-5073-00

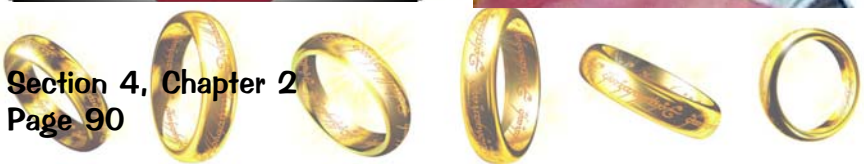

Drawings for Major Assemblies & Ramps

Down Post (Sword Ball Lock) Assembly, 500-6752-00 (Items 1-9)

When energized, the pinball is released to exit the Sword Ramp (Pg. 93).

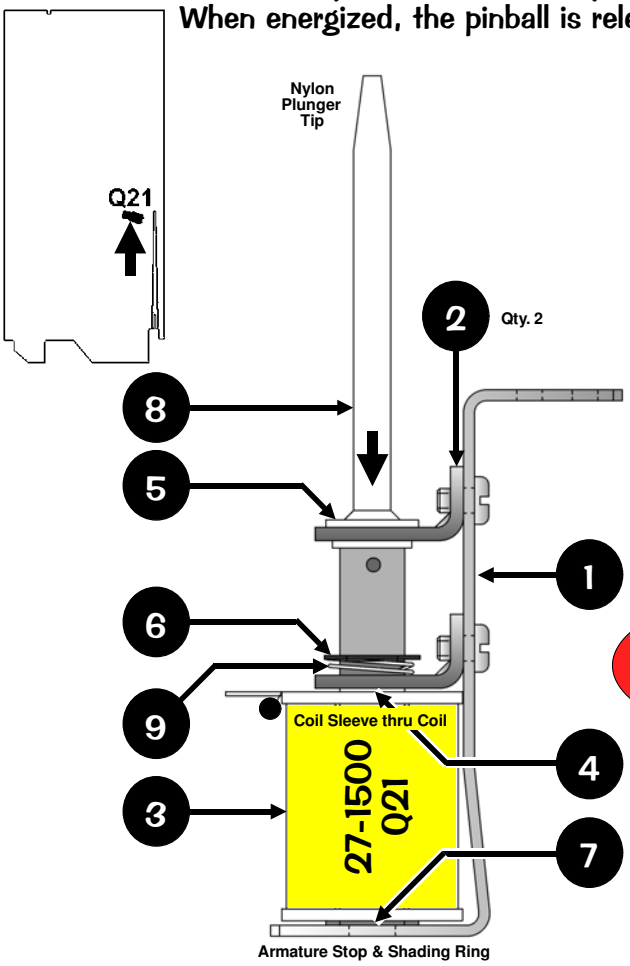

№	INDIVIDUAL PART NAME	QTY.	SPI PART №
1	Coil Mounting Bracket	1	515-7132-00
Item 1 is secured below the playfield by: #8 X 1/2" HWH AB (Zinc) (Qty. 3) (234-5101-00)			
2	Coil Retaining Bracket	2	535-5203-03
Item 2 is secured by: #8-32 X 1/4" PPH MS (Sems) Zinc (Qty. 2/per) (232-5300-00)			
3	Coil, 27-1500	1	090-5004-00T
Coil has a Diode (1N4004) (112-5003-00) positioned @ top (above lugs next to windings).			
4	Coil Sleeve	1	545-5411-00
5	Nyliner, 7/16" ø Shaft	1	545-5418-01
6	Retaining Ring, 7/16" ø Shaft	1	270-5005-00
7	Spring Washer, 17/32" ID X 3/4" X 1"	1	269-5002-00
8	Plunger *(with Nylon Tip)* Assembly	1	515-7350-00
For Individual Items use : Plunger (**530-5315-00**) & Nylon Tip (**530-5656-00**)			
9	Compression (Relay) Spring	1	266-5022-01
Ordering Note: If **500-6752-00** *is unavailable*, order the individual part(s) actually required.			

For Securing Hardware, see the Parts Table above, under the item desired.

Plunger shown in its energized state (plunger down)

Take Note:

- **Coil Note:** P Either -00**B** *or* -00**T** can be used for coil replacements. *B/T listed is preferable for easier diode access & may differ on game.*

Item 8 Note: *Early Production games had a different Plunger Assembly and required a "flipper bushing" for a spacer. Some plunger tips may differ slightly but they all work the same. If replacing with above part, remove flipper bushing, if applicable.*

30° Eject (Saucer) Assembly, 500-6511-11 (Items 1-8)

and Associated Part: See Parts Table below.

When energized, the pinball is kicked out of the Upper Right Orbit Saucer.

№	INDIVIDUAL PART NAME	QTY.	SPI PART №
1	Mounting Bracket 30° Bend (Frame)	1	535-8932-02
Item 1 is secured below the playfield by: #8 X 1/2" HWH AB (Zinc) (Qty. 2) (234-5101-00)			
2	Coil Retaining Bracket	1	535-5203-03
Item 2 is secured to Item 1 by: #8-32 X 1/4" PPH MS (Sems) (Qty. 2) (232-5300-00)			
3	Coil, 26-1200	1	090-5044-00B
Coil has a Diode (1N4004) (112-5003-00) positioned @ bot (below lugs opposite windings).			
4	Coil Sleeve (Short) (Formost #10-7077)	1	545-5076-01
5	Spring Washer (17/32" ID X 3/4" X 1")	1	269-5002-00
6	Plunger *(with Nylon Tip)* Assembly	1	515-7197-00
7	Compression (Return) Spring	1	266-5022-01
8	Rubber Bumper (Grommet)	1	545-5105-00
Ordering Note: If **500-6511-11** *is unavailable*, order the individual part(s) actually required.			

ASSOCIATED PART **IS NOT INCLUDED** WITH THE ABOVE ASSEMBLY.

№	ASSOCIATED PART NAME	QTY.	SPI PART №
AP-A	Switch Assembly	1	500-6520-00
For Individual Items use : Switch Bracket (**535-6173-00**), Micro Switch (**180-5186-00**), Switch Body Protect Plate (**535-6539-00**) **and** Diode 1N4004 (**112-5003-00**).			

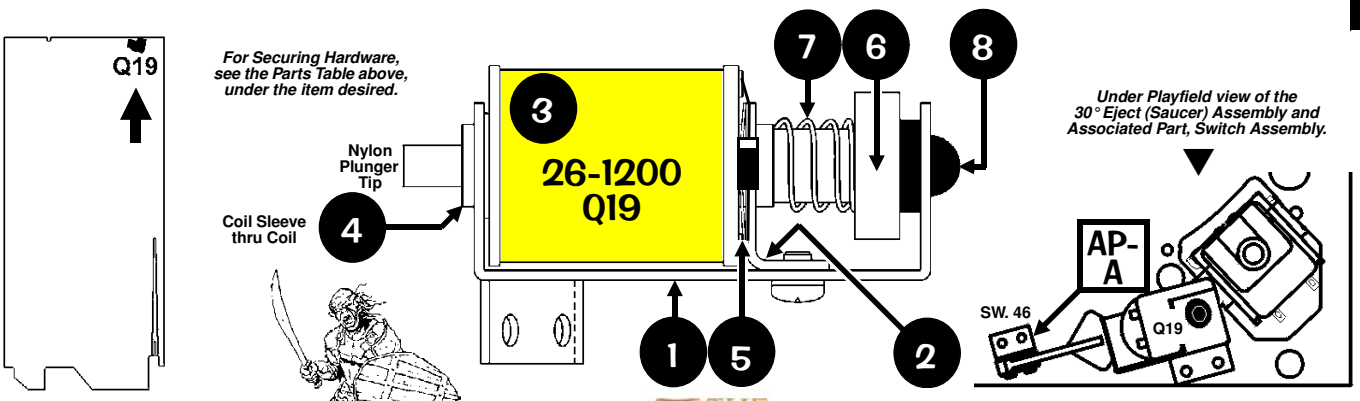

Upper Mini-Playfield, Left & Center Wire Ramps, Individual Parts Only (Items 1-14)

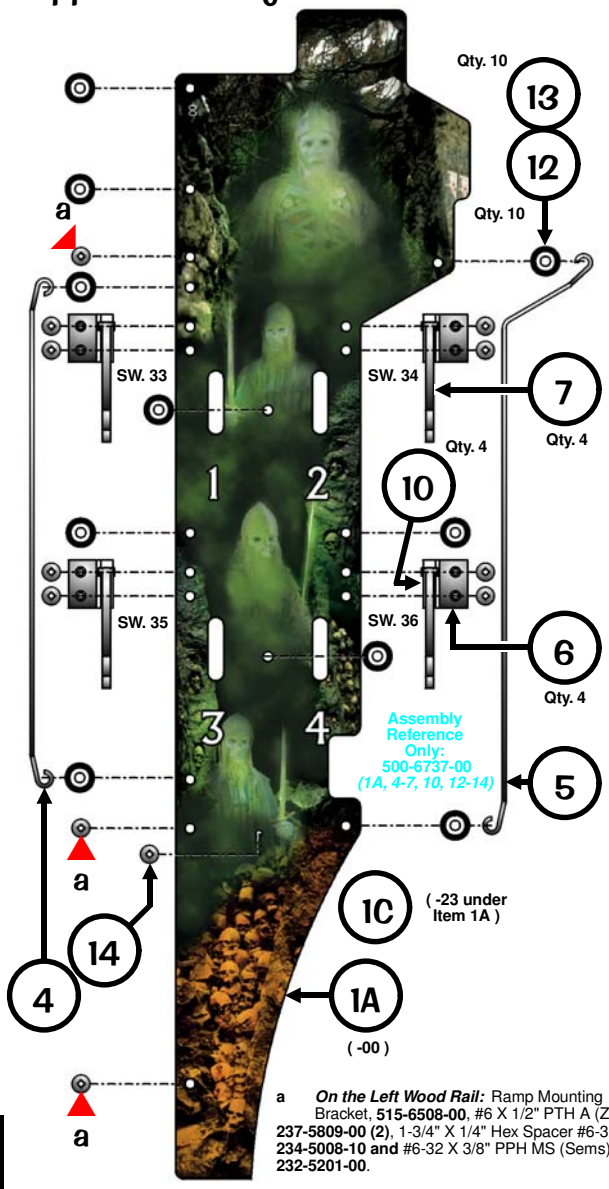

a *On the Left Wood Rail:* Ramp Mounting Bracket, **515-6508-00**, #6 X 1/2" PTH A (Zinc), **237-5809-00 (2)**, 1-3/4" X 1/4" Hex Spacer #6-32 Tap, **234-5008-10 and** #6-32 X 3/8" PPH MS (Sems) Zinc, **232-5201-00**.

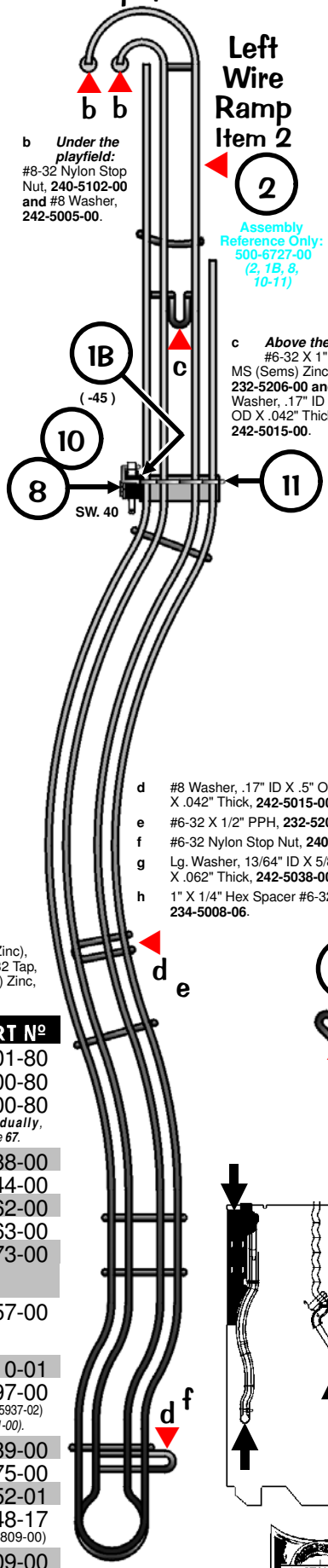

b *Under the playfield:* #8-32 Nylon Stop Nut, **240-5102-00 and** #8 Washer, **242-5005-00**.

c *Above the P/F:* #6-32 X 1" PPH MS (Sems) Zinc, **232-5206-00 and** #8 Washer, .17" ID X .5" OD X .042" Thick, **242-5015-00**.

d #8 Washer, .17" ID X .5" OD X .042" Thick, **242-5015-00**.

e #6-32 X 1/2" PPH, **232-5202-00**

f #6-32 Nylon Stop Nut, **240-5005-00**.

g Lg. Washer, 13/64" ID X 5/8" OD X .062" Thick, **242-5038-00**.

h 1" X 1/4" Hex Spacer #6-32 Tap, **234-5008-06**.

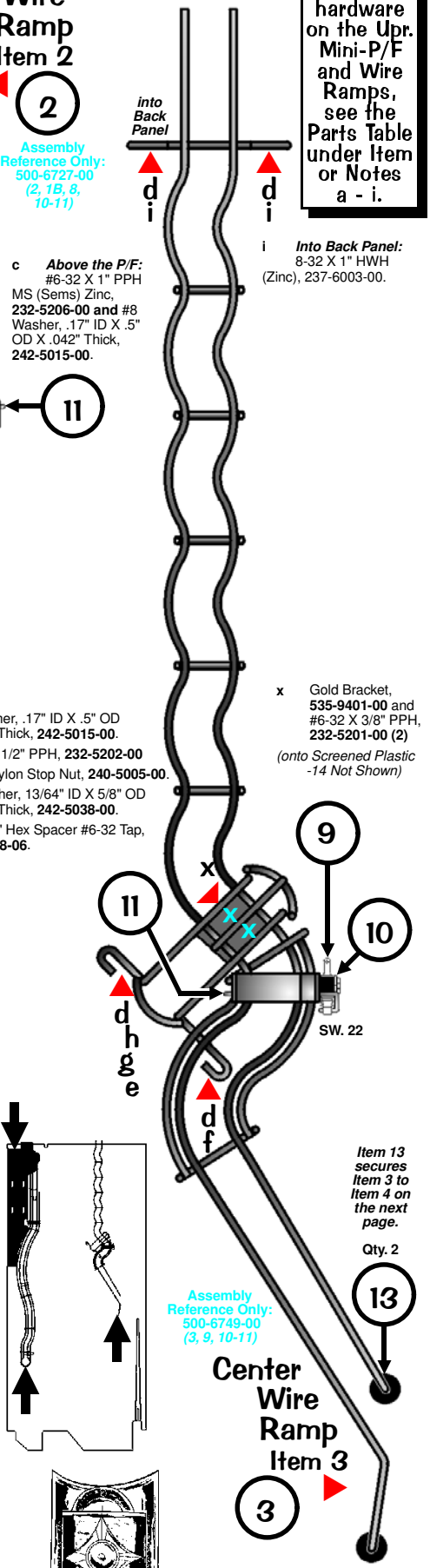

For the securing hardware on the Upr. Mini-P/F and Wire Ramps, see the Parts Table under Item or Notes a - i.

i *Into Back Panel:* 8-32 X 1" HWH (Zinc), 237-6003-00.

x Gold Bracket, **535-9401-00** and #6-32 X 3/8" PPH, **232-5201-00 (2)**

(onto Screened Plastic -14 Not Shown)

№	INDIVIDUAL PART NAME	QTY.	SPI PART №
1A	***Kit:*** Thick Plastics (Screened) **-00**	1	803-5001-80
1B	***Kit:*** Plastics (Screened) **-45**	1	803-5000-80
1C	***Kit:*** Decals (Screened) **-23**	1	802-5000-80
	Note: *Individual Thick Plastic (-00), Plastic (Clear -45) and Decal (-23)* ***are not available individually****, ordering of kit is required. For all pieces, see* ***Playfield - Plastics (Screened & Clear) & Decals****, Page 67.*		
2	Left Wire Ramp ***(No Parts)***	1	535-9288-00
3	Center Wire Ramp ***(No Parts)***	1	535-9344-00
4	Wire Form (Left Side)	1	535-9362-00
5	Wire Form (Right Side)	1	535-9363-00
6	Bracket, Switch Mounting	4	535-6173-00
	Item 6 is secured to Item 1A by: #6-32 X 1/2" PPH MS (Sems) Zinc (Qty. 2/per) (232-5202-00) **and** #6-32 Nylon Stop Nut (Qty. 2/per) (240-5005-00)		
7	Micro Switch **(High Form Flat Blade)**	4	180-5057-00
	Item 7 is secured to Item 6 by: #2-56 X 1/2" HWH Ser Black (Qty. 2/per) (237-5937-02) **and** #2-56 Nylon Stop Nut (Qty. 2/per) (240-5321-00)		
8	Micro Switch **(1⅝" Flat Blade)**	1	180-5010-01
9	Micro Switch **(1⅝", 2x bend Flat Blade)**	1	180-5197-00
	Items 8 & 9 are secured to Items 2 & 3 by: #2-56 X 1/2" HWH Ser Black (Qty. 2/per) (237-5937-02) ***Items 7 - 9:*** Switches have Diode (1N4004) (112-5003-00). *Can be replaced with (1N4001) (112-5001-00).*		
10	Switch Body Protect Plate	6	535-6539-00
11	Wire Form (Ramp Roll-Under Gate)	2	535-9375-00
12	Mini-Jewel Plastic Post (Clear)	10	550-5052-01
13	Rubber Ring (Black), 7/16" O.D.	12	545-5348-17
	Items 12-13 are secured to Item 1A by: #6 X 1/2" PTH A (Zinc) (Qty. 1/per) (237-5809-00)		
14	#6 X 1/2" PTH A (Zinc)	1	237-5809-00

Center, Right, Sword and Shooter Lane Ramps Individual Parts Only (Items 1-17)

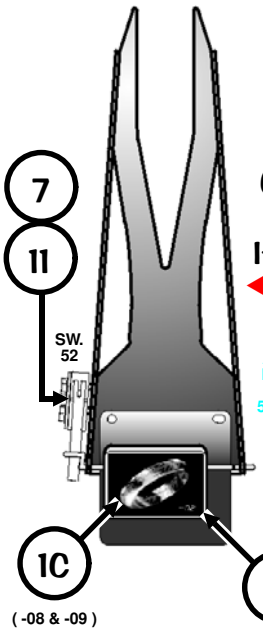

Center Ramp Item 2®

2®

Assembly Reference Only: 500-6733-00 *(1C, 2®, 6-7, 11)*

a 5/8" X 3/8" Plastic Spacer Gray, 254-5000-14, *(then Item 1B -43 Clear Not Shown for clarity)*, 1/2" X 3/8" Plastic Spacer Gray, 254-5000-01, *(then Item 1B -36 Clear Not Shown for clarity)*.

b ***Onto Item 4:*** 1/4" X 3/8" Plastic Spacer Gray, **254-5000-02 and** #4-40 X 3/8" PPH TF, **237-5979-00**.

c ***On the Rt. Wood Rail:*** Ramp Mounting Bracket, **515-6508-00**, #6 X 1/2" PTH A (Zinc), **237-5809-00 (2)**, 3/4" X 1/4" Hex Spacer #6-32 Tap, **234-5008-04 and** #6-32 X 3/8" PPH MS (Sems) Zinc, **232-5201-00**.

d 1/2" X 3/8" Plastic Spacer Gray, **254-5000-03**.

e #6-32 Nylon Stop Nut, **240-5005-00**.

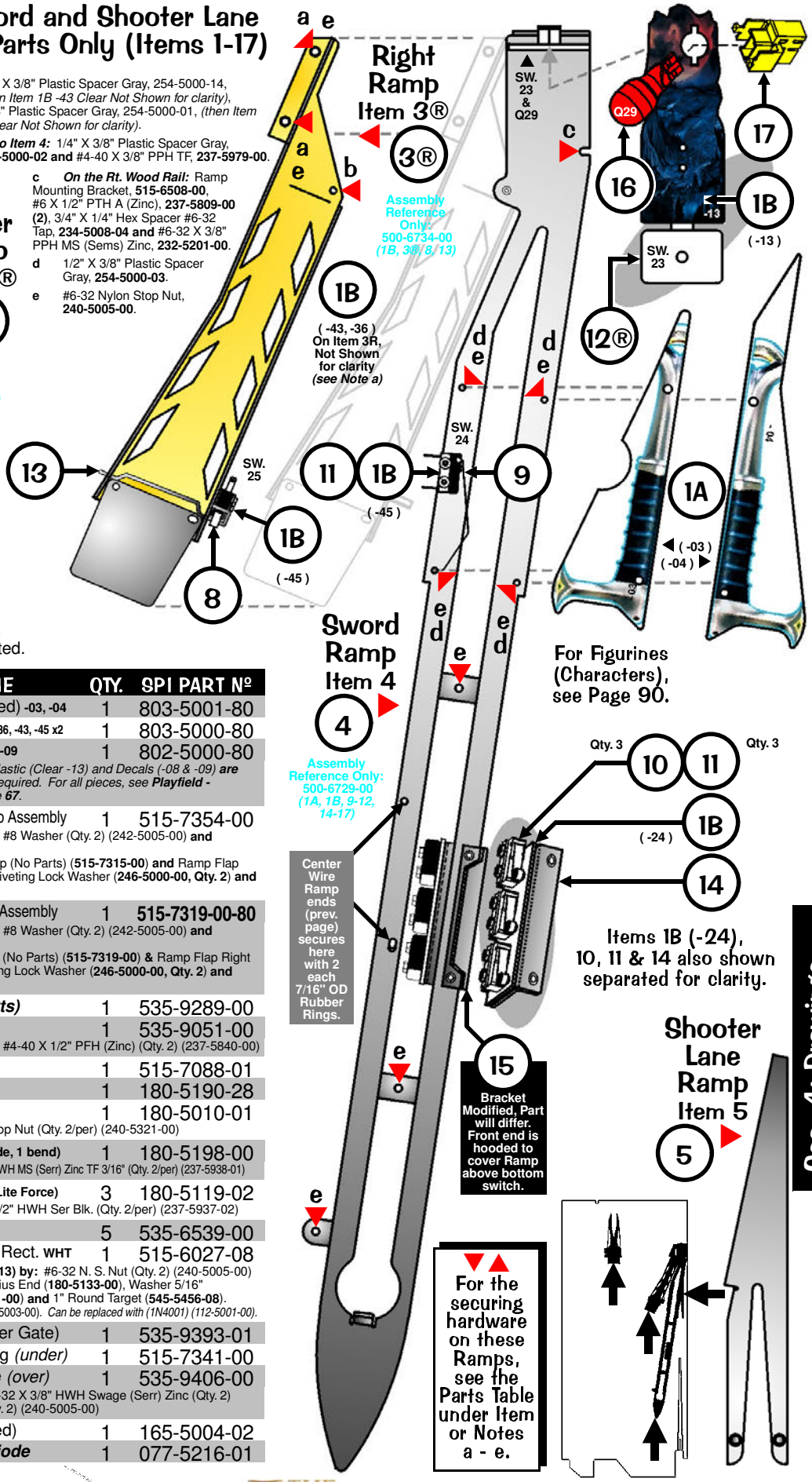

For Figurines (Characters), see Page 90.

Items 1B (-24), 10, 11 & 14 also shown separated for clarity.

Take Note:

® "R" indicates Item noted is secured with rivet(s) as listed.

№	INDIVIDUAL PART NAME	QTY.	SPI PART №
1A	***Kit:*** Thick Plastics (Screened) **-03, -04**	1	803-5001-80
1B	***Kit:*** Plastics (Scr. & Clr.) **-13, -24, 36, -43, -45 x2**	1	803-5000-80
1C	***Kit:*** Decals (Screened) **-08, -09**	1	802-5000-80
	Note: *Individual Thick Plastics (-03 & -04), Plastic (Clear -13) and Decals (-08 & -09)* ***are not available individually****, ordering of kit is required. For all pieces, see* ***Playfield - Plastics (Screened & Clear) & Decals****, Page* ***67****.*		
2®	Riveted Center Steel Ramp & Flap Assembly	1	515-7354-00
	Item 2 is secured through the playfield by: #8 Washer (Qty. 2) (242-5005-00) **and** #8-32 Nylon Stop Nut (Qty. 2) (240-5102-00) ***For Individual Items use :*** Center Steel Ramp (No Parts) (**515-7315-00**) **and** Ramp Flap Left (**535-9389-00**) **and is secured by:** #6 Riveting Lock Washer (**246-5000-00, Qty. 2**) **and** Rivet, 1/8" ø X 3/16" Lg. (**249-5001-00, Qty. 2**)		
3®	Riveted Right Steel Ramp & Flap Assembly	1	**515-7319-00-80**
	Item 3 is secured through the playfield by: #8 Washer (Qty. 2) (242-5005-00) **and** #6-32 Nylon Stop Nut (Qty. 2) (240-5005-00) ***For Individual Items use :*** Right Steel Ramp (No Parts) (**515-7319-00**) **&** Ramp Flap Right (**535-9389-01**) **and is secured by:** #6 Riveting Lock Washer (**246-5000-00, Qty. 2**) **and** Rivet, 1/8" ø X 3/16" Lg. (**249-5001-00, Qty. 2**)		
4	Sword Steel Ramp ***(No Parts)***	1	535-9289-00
5	Shooter Lane (Flat) Ramp	1	535-9051-00
	Item 5 is secured through the playfield by: #4-40 X 1/2" PFH (Zinc) (Qty. 2) (237-5840-00)		
6	Spinner Target (Large)	1	515-7088-01
7	Micro Switch **(Flat Blade)**	1	180-5190-28
8	Micro Switch **(1⅝" Flat Blade)**	1	180-5010-01
	Items 7 & 8 are secured by: #2-56 Nylon Stop Nut (Qty. 2/per) (240-5321-00)		
9	Micro Switch **(2-3/16", Flat Blade, 1 bend)**	1	180-5198-00
	Item 9 is secured to Item 4 by: #2-56 X 3/8" HWH MS (Serr) Zinc TF 3/16" (Qty. 2/per) (237-5938-01)		
10	Micro Switch **(Roller Actuator, Lite Force)**	3	180-5119-02
	Item 11 is secured to Item 10 by: #2-56 X 1/2" HWH Ser Blk. (Qty. 2/per) (237-5937-02)		
11	Switch Body Protect Plate	5	535-6539-00
12®	Sw. & Target Assy. 1" X 1½" Rect. **WHT**	1	515-6027-08
	Item 12 is secured to Item 4 thru Item 1B (-13) by: #6-32 N. S. Nut (Qty. 2) (240-5005-00) ***For Individual Items use :*** Stack Switch Radius End (**180-5133-00**), Washer 5/16" (**242-5017-00**), Rivet 1/8" ø X 3/16" (**249-5001-00**) **and** 1" Round Target (**545-5456-08**). ***Items 7-10 & 12:*** Switches have Diode (1N4004) (112-5003-00). *Can be replaced with (1N4001) (112-5001-00).*		
13	Wire Form (Ramp Roll-Under Gate)	1	535-9393-01
14	Bracket, X3 Switch Mounting *(under)*	1	515-7341-00
15	Bracket, Hooded Ball Guide *(over)*	1	535-9406-00
	Items 14 & 15 are secured to Item 4 by: #6-32 X 3/8" HWH Swage (Serr) Zinc (Qty. 2) (237-5976-02) **and** #6-32 Nylon Stop Nut (Qty. 2) (240-5005-00)		
16	#906 Wedge Base Bulb (Red)	1	165-5004-02
17	IDC Snap-On Socket ***No Diode***	1	077-5216-01

Back Panel (Front View) Individual Parts Only, (Items 1-14)

Parts Table & Back View on continues on the next page.

Assembly Reference Only: 500-6723-00 (1A-15)

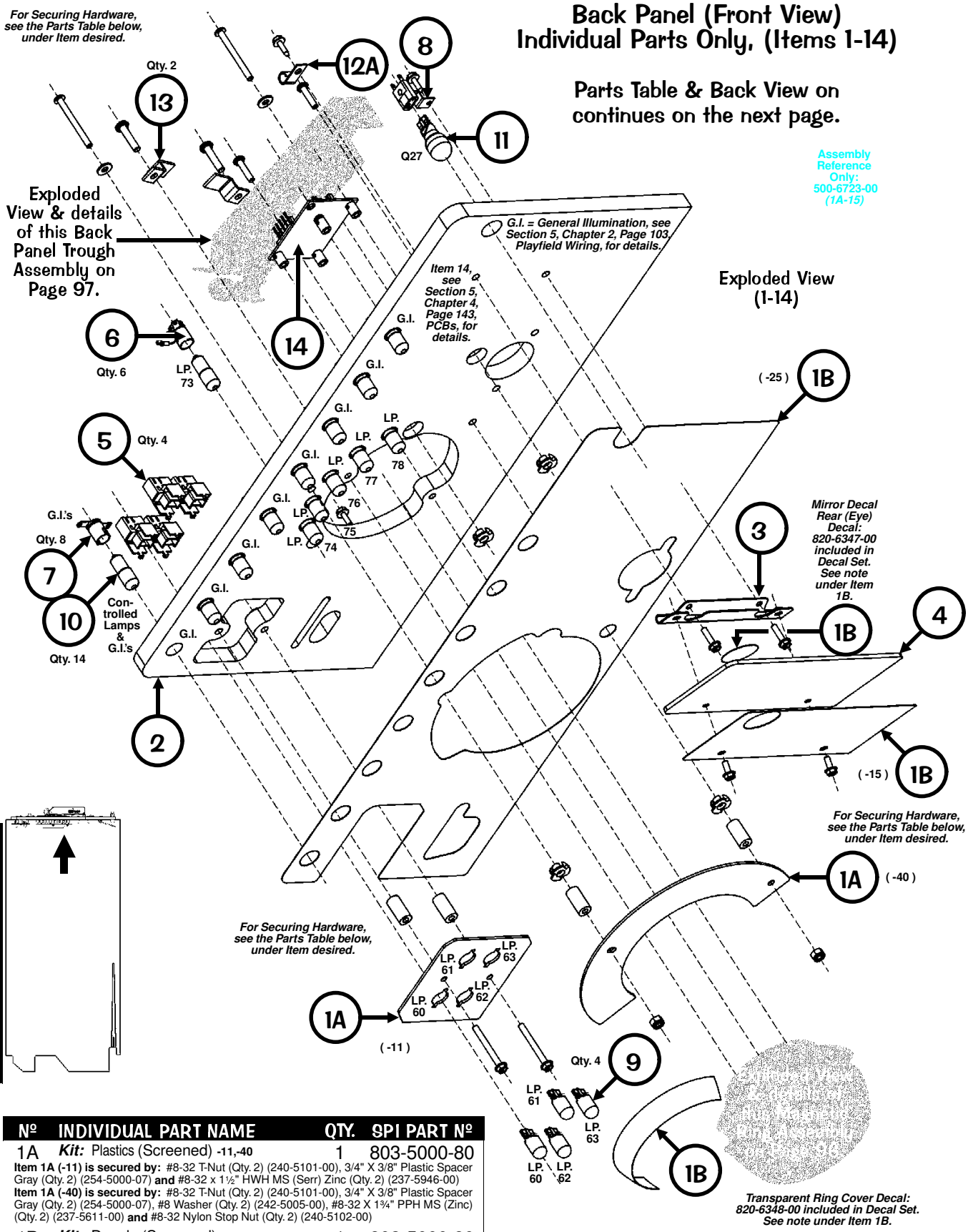

Sec. 4: Drawings ...

Nº	INDIVIDUAL PART NAME	QTY.	SPI PART Nº
1A	***Kit:*** Plastics (Screened) **-11,-40**	1	803-5000-80
	Item 1A (-11) is secured by: #8-32 T-Nut (Qty. 2) (240-5101-00), 3/4" X 3/8" Plastic Spacer Gray (Qty. 2) (254-5000-07) **and** #8-32 x 1½" HWH MS (Serr) Zinc (Qty. 2) (237-5946-00) **Item 1A (-40) is secured by:** #8-32 T-Nut (Qty. 2) (240-5101-00), 3/4" X 3/8" Plastic Spacer Gray (Qty. 2) (254-5000-07), #8 Washer (Qty. 2) (242-5005-00), #8-32 X 1¾" PPH MS (Zinc) (Qty. 2) (237-5611-00) **and** #8-32 Nylon Stop Nut (Qty. 2) (240-5102-00)		
1B	***Kit:*** Decals (Screened) **noted & -15, -25**	1	802-5000-80
	Note: *Individual Plastics (-11 & -40) and Decals (820-6347-00, -6348-00, -15 & -25)* ***are not available individually****, ordering of kit is required. For all pieces, see* ***Playfield - Plastics (Screened & Clear) & Decals****, Page* ***67****.*		
2	Back Panel ***(Black Wood, Plain No Parts)***	1	525-5636-00
	Item 2 is secured under the Playfield by: Bracket, Back Panel Mounting *(Not Shown)* (Qty. 2) (535-8964-00) **and** #8 X 1/2" HWH AB (Zinc) (Qty. 4/per) (234-5101-00)		

Nº	INDIVIDUAL PART NAME	QTY.	SPI PART Nº
3	Mirror Mounting Bracket	1	535-9397-00
	Item 3 is secured to Item 2 by: #8-32 T-Nut (Qty. 2) (240-5101-00) **and** #8-32 X 5/8" HWH MS (Serr) Zinc TF (Qty. 2) (237-5951-00)		

Continued next Page 95 (Top) ▶

Back Panel (Back View) Continued Individual Parts Only, (Items 1-14)

Parts Table and Front View on previous page.

№	INDIVIDUAL PART NAME	QTY.	SPI PART №
	◀ *Continued from Page 94 (Bottom)*		
4	Mirror Panel	1	820-6297-01
Item 4 is secured to Item 3 by: #8-32 X 3/8" HWH MS Type C (Qty. 2) (237-5903-00)			
5	IDC Snap-On Socket ***No Diode***	4	077-5216-01
6	3-Lug Staple-Dn. Bayonet Socket	6	077-5001-00
Items 5 - 6: Lamps have Diode (1N4004) (112-5003-00). *Can be replaced with (1N4001) (112-5001-00).* ***Item 7:*** *G.I. Sockets do not require a diode.*			
7	2-Lug Staple-Dn. Bayonet Socket	8	077-5000-00
8	Wedge Base Socket (Offset)	1	077-5029-00
9	#555 Wedge Base Bulb (Green)	4	165-5054-04
Items 9: Can replace with #555 Wedge Base Bulb (Clear) (165-5002-00) with the use of a Green Lite Cover (545-5014-04). Green is preferred.			
10	#44 Bulb Bayonet Bulb (Clear)	14	165-5000-44
11	#906 Wedge Base Bulb (Clear)	1	165-5004-00
12A	1/4" Cable (Single) Clamp	1	040-5000-03
12B	1/2" Cable (Single) Clamp	1	040-5000-06
Items 12A & 12B are secured to Item 2 by: #8 X 1/2" HWH AB (Zinc) (Qty. 1/per) (234-5101-00)			
13	Magnet Bracket	2	535-9396-00
Item 13 is secured to Item 2 by: #10-32 X 7/8" PPH MS (Sems) Zinc (Qty. 1/per) (232-5405-00)			
14	OPTO Trans./Rec. Amplifier PCB	1	520-5239-00
Item 14 is secured to Item 2 by: 3/8" Slf. Rtn. Plastic Spacer White (Qty. 4) (254-5007-01) **&** #6 X 7/8" PPH AB (Zinc) (Qty. 4) (237-5003-00)			

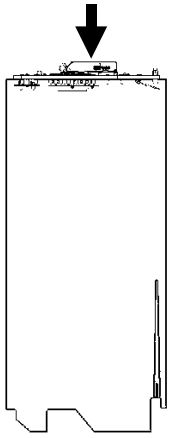

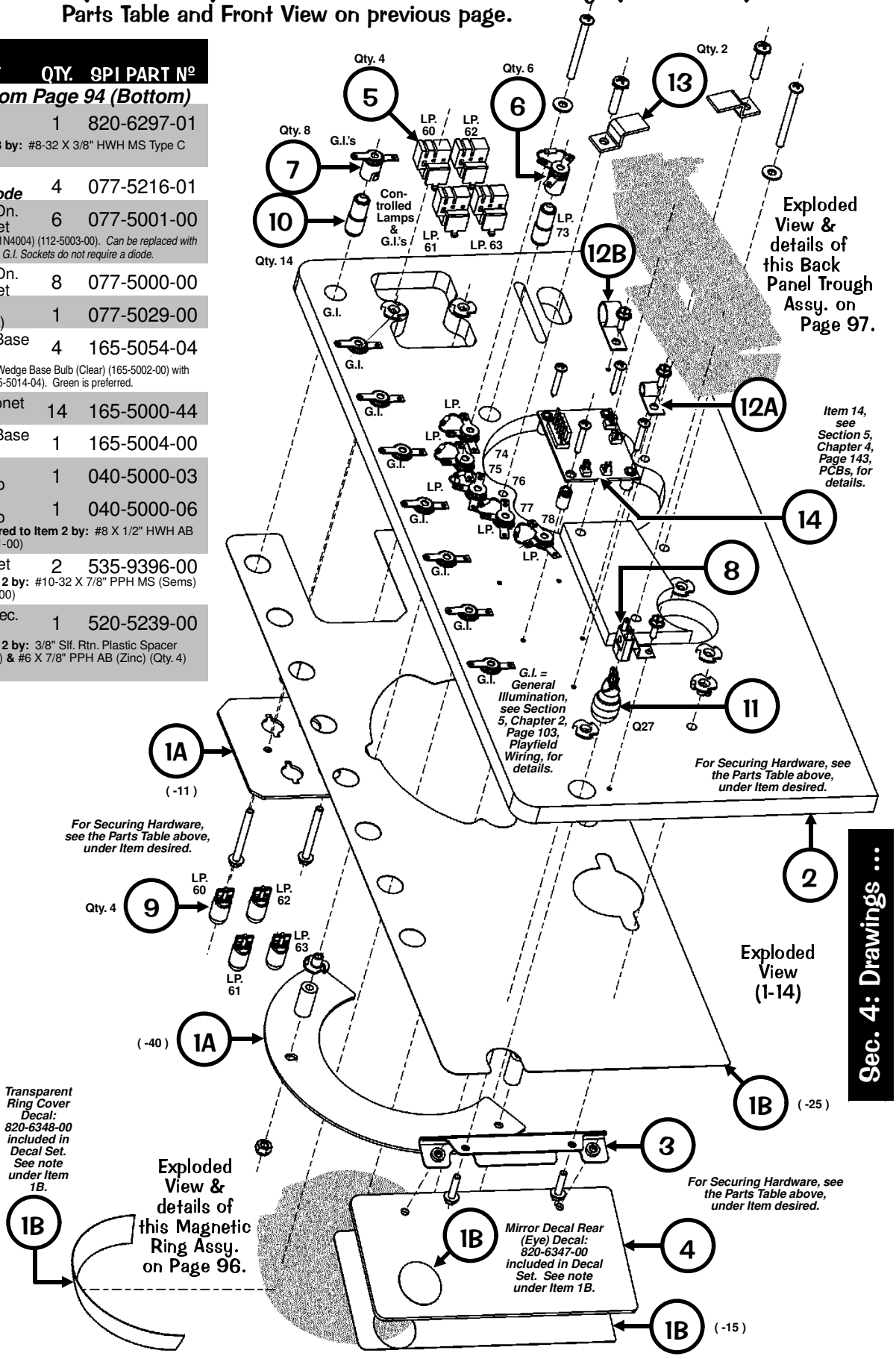

Assembly Reference Only: 500-6723-00 (1A-15)

Magnetic Ring Assembly Individual Parts Only (Items 1-7)

Located on the front of the Back Panel
(see Pages 94-95 for complete Back Panel Exploded Front & Back Views).

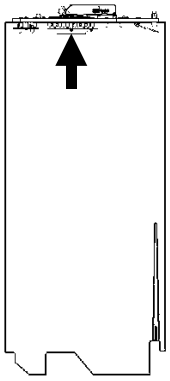

Assembly Reference Only: 500-6718-00 (1®-7)

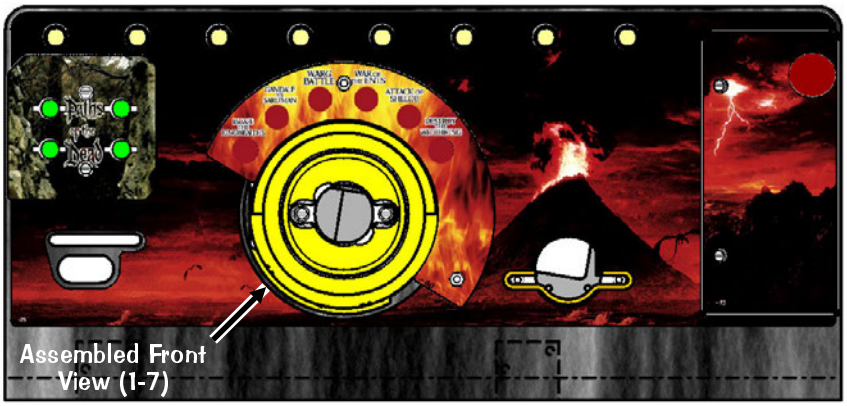

№	INDIVIDUAL PART NAME	QTY.	SPI PART №
1®	Riveted Magnetic Ring (Vacuum Form) Asm.	1	515-7345-00
Item 1 is secured to Item 4 by: #4-40 X 3/8" HWH MS (Zinc) TF (Qty. 4) (237-5933-00) ***For Individual Items use (requires drilling out rivets & revitting) :*** Gold Plastic Ring (**545-6095-00**), Bracket, Mounting (**535-9382-00, Qty. 4**) **and** Pop Rivet, 1/8" ø X 3/16" (**249-5025-00, Qty. 4**)			
2	Ring Funnel (Plastic)	1	545-6096-00
Item 2 is secured to Items 3 & 4 by: #6-32 X 1/4" HWH Swage (Serr) Zinc (Qty. 2) (237-5976-00)			
3	Magnet Bushing	1	545-5966-01
4	Ring Mounting Plate	1	535-9379-00
5	Coil (Magnet), 20½-480	1	090-5064-02
6	OPTO Transmitter PCB Assembly	1	500-6746-00
7	OPTO Receiver PCB Assembly	1	500-6747-00
Items 6 & 7 are secured to Item 4 by: #4-40 x 1/2" PPH MS (Sems) Zinc (Qty. 2/per) (237-5813-00) ***For Individual Parts use :*** *See Section 5, Chapter 4, Page 143, PCBs, for details.*			

20½-480
Q6

Take Note:

® "R" indicates Item noted is secured with rivet(s) as listed.

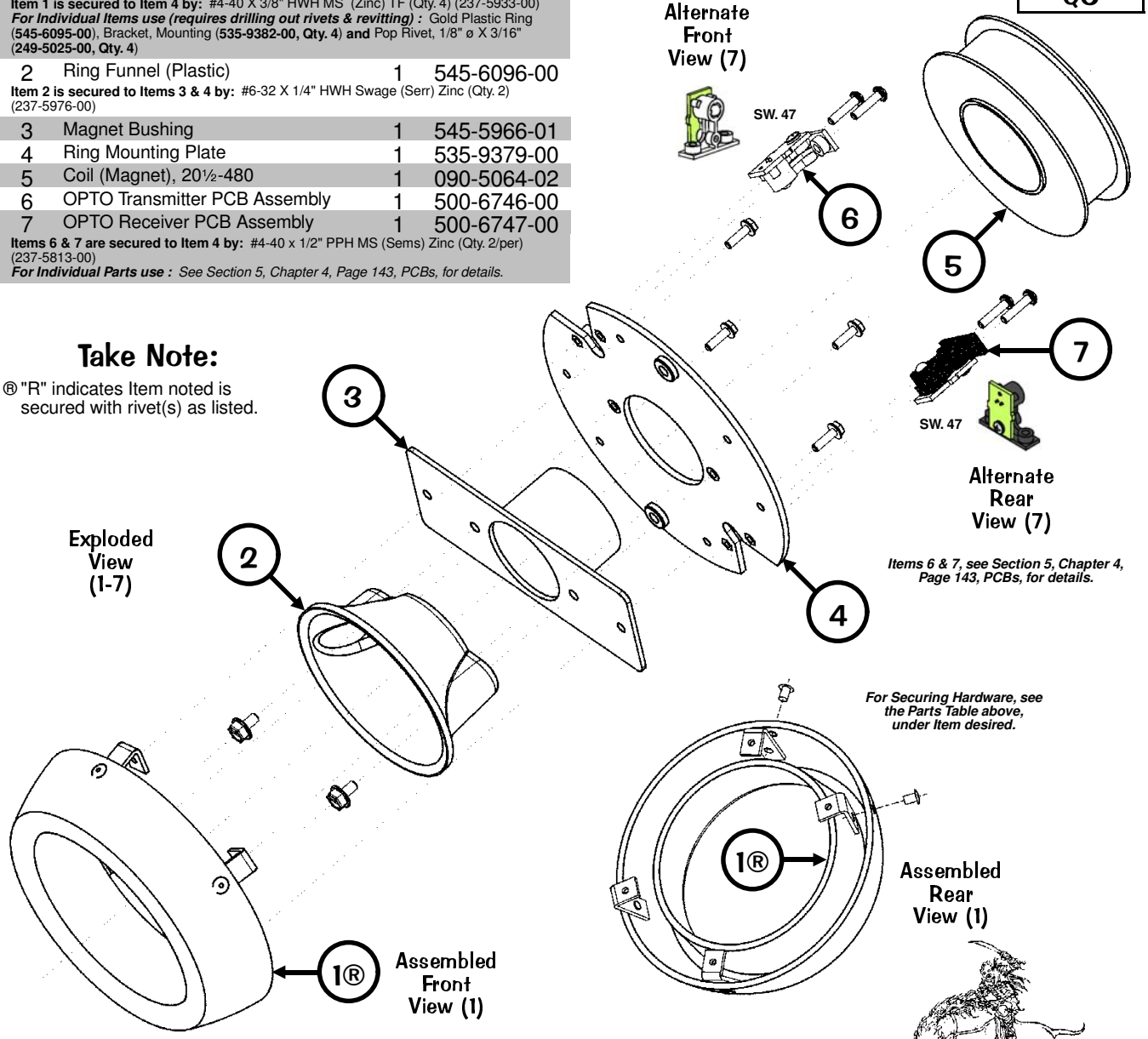

Back Panel Trough Assembly Individual Parts Only (Items 1-5)

Located on the rear of the Back Panel

(see Pages 94-95 for complete Back Panel Exploded Front & Back Views).

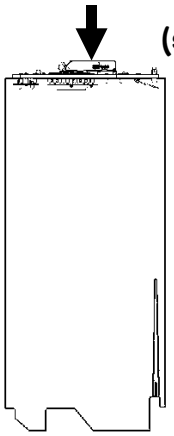

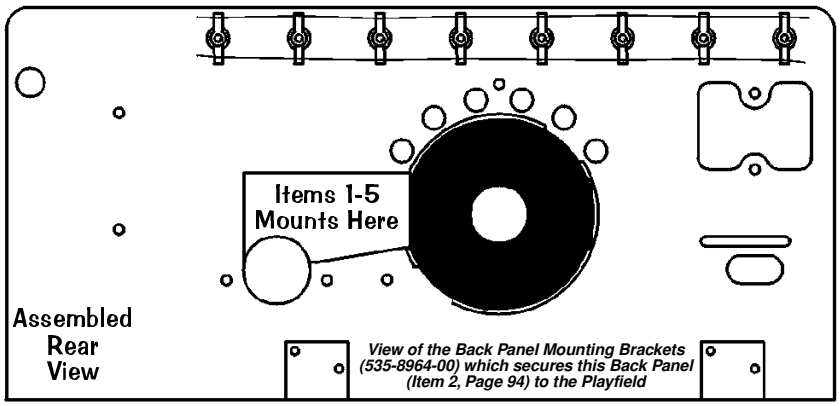

Assembly Reference Only: 500-6748-00 *(1-4)*

№	INDIVIDUAL PART NAME	QTY.	SPI PART №
1	Ball Trough (Back Panel)	1	535-9345-00
	Item 1 is secured to the Back Panel by: #8-32 X 3/4" PPH MS (Sems) Zinc (Qty. 2) (232-5304-00)		
2	Wedge Base Socket (Offset)	1	077-5029-00
	Item 2 is secured to Item 1 by: #4-40 X 5/8" PPH MS (Sems) Zinc (Qty. 1) (237-5832-00), Blk. Rbr. Ring, 3/8" O.D. (Qty. 1) (545-5348-19) **and** #4-40 N. Stop Nut (Qty. 1) (240-5303-00)		

№	INDIVIDUAL PART NAME	QTY.	SPI PART №
3	#906 Wedge Base Bulb (Clear)	1	165-5004-00
4	Micro Switch **(High Form Flat Blade)**	1	180-5057-00
5	Switch Body Protect Plate	1	535-6539-00
	Items 4 & 5 are secured to Item 1 by: #2-56 X 1/2" HWH Ser Blk (Qty. 2/per) (237-5937-02) Switch has a Diode (1N4004) (112-5003-00). *Can be replaced with (1N4001) (112-5001-00).*		

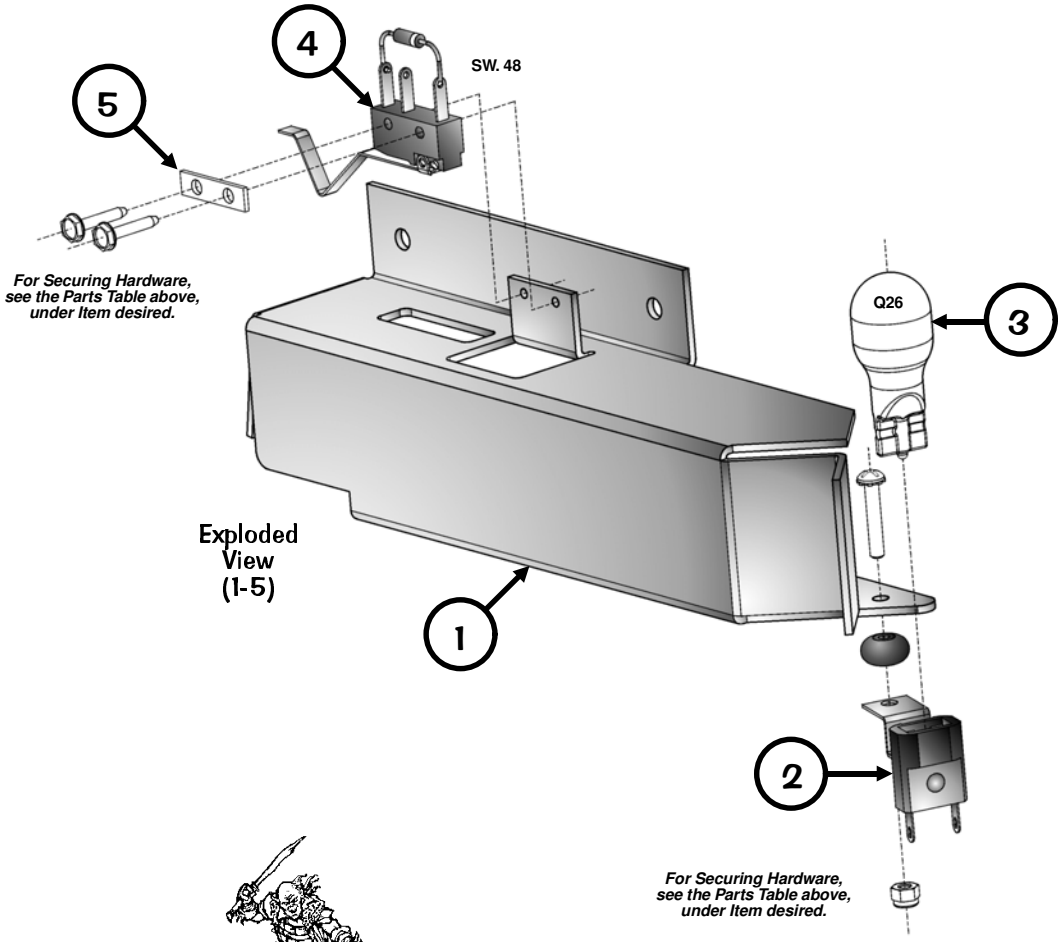

UK ONLY OPTIONAL
Ball Deflector Assemblies, 500-5788-02 (Qty. 2) (Items 1-8)

Nº	INDIVIDUAL PART NAME	QTY.	SPI PART Nº
1	Ball Deflector Coil Mounting Bracket	1	535-6857-02
Item 1 is secured below the playfield by: #8 X 1/2" HWH AB (Zinc) (Qty. 4) (234-5101-00)			
2	Coil Retaining Bracket	1	535-5203-03
Item 2 is secured by: #8-32 X 1/4" PPH MS (Sems) Zinc (Qty. 2) (232-5300-00)			
3	Coil, 26-1200	1	090-5044-00T
Coil has a Diode (1N4004) (112-5003-00) positioned @ top (above lugs next to windings).			
4	Coil Sleeve (Short) (Formost #10-7077)	1	545-5076-01
5	Spring Washer (17/32" ID X 3/4" X 1")	1	269-5002-00
6	Solid Plunger Assembly	1	515-6858-00
7	Compression (Relay) Spring	1	266-5022-01
8	#10-32 Adj. Spindle Stop w/Rubber Tip	1	280-5014-00
Item 8 is secured by: #10-32 Keps Nut (Qty. 1) (240-5208-00)			

Ordering Note: If **500-5788-02** *is unavailable*, order the individual part(s) actually required.

UK ONLY OPTIONAL
Up/Down Post Assy., 500-6293-00 (Items 1-9)

Nº	INDIVIDUAL PART NAME	QTY.	SPI PART Nº
1	Up/Down Post Coil Mounting Bracket	1	515-6840-00
Item 1 is secured below the playfield by: #8 X 1/2" HWH AB (Zinc) (Qty. 6) (234-5101-00)			
2	Adjustment Spindle Stop Bracket	1	535-8303-00
3	Coil Retaining Bracket	2	535-7356-00
Items 2 & 3 are secured by: #8-32 X 3/8" Swage (Serr) Zinc (Qty. 2/per) (237-5975-00)			
4	Coil, 23-1100 (ORG)	1	090-5030-00T
Coil has a Diode (1N4004) (112-5003-00) positioned @ top (above lugs next to windings).			
5	Coil Sleeve (with extension)	1	545-5847-00
6	Spring Washer, 17/32" ID X 3/4" X 1"	1	269-5002-00
7	Plunger & Shaft Assembly	1	515-6844-00
ORDERING ABOVE (ITEM 7) SUB-ASSY. PART Nº WILL INCLUDE:			
7A	Ball Bumper Plastic (Top) Red	1	550-5029-02
7B*	Roll Pin, 3/32" ø X 1/2" Long	1	251-5002-00
7C*	Retaining Ring, 1/4" ø Shaft	1	270-5002-00
7D	Plunger & Shaft Sub-Assembly	1	515-6841-00
7E	Plunger Head	1	530-5511-00
7F	#10-32 X 3/8" PPH MS (Sems) Zinc	1	232-5401-00
Ordering Note: If **515-6844-00** *is unavailable*, order the individual part(s) actually required. Item **7D**, part of Item **7**, Plunger & Shaft Sub-Assembly, is 1 piece and cannot be ordered separated.			
8	Compression (Relay) Spring	1	266-5022-01
9	#10-32 Adj. Spindle Stop w/Rubber Tip	1	280-5014-00
Item 9 is secured by: #10-32 Keps Nut (Qty. 1) (240-5208-00)			

Ordering Note: If **500-6293-00** *is unavailable*, order the individual part(s) actually required.

Take Note:

↻ **Coil Note:** ↻ Either -00**B** *or* -00**T** can be used for coil replacements. *B/T listed is preferable for easier diode access & may differ on game.*

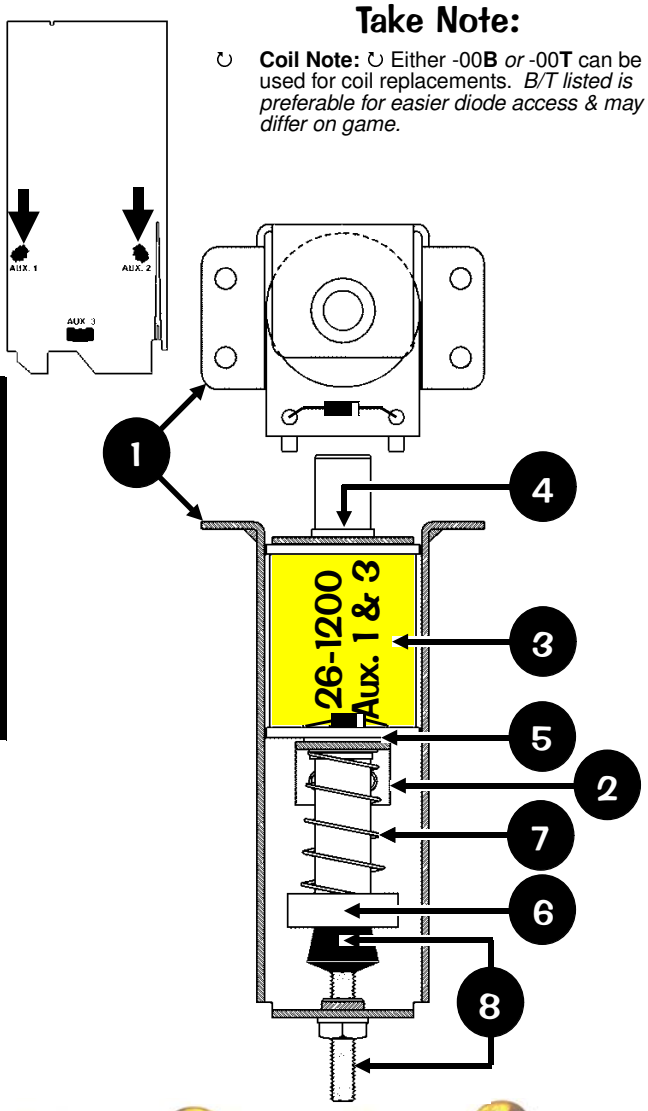

Take Note:

* An asterisk (*) indicates item(s) are not noted in the pictorials.

↻ **Coil Note:** ↻ Either -00**B** *or* -00**T** can be used for coil replacements. *B/T listed is preferable for easier diode access & may differ on game.*

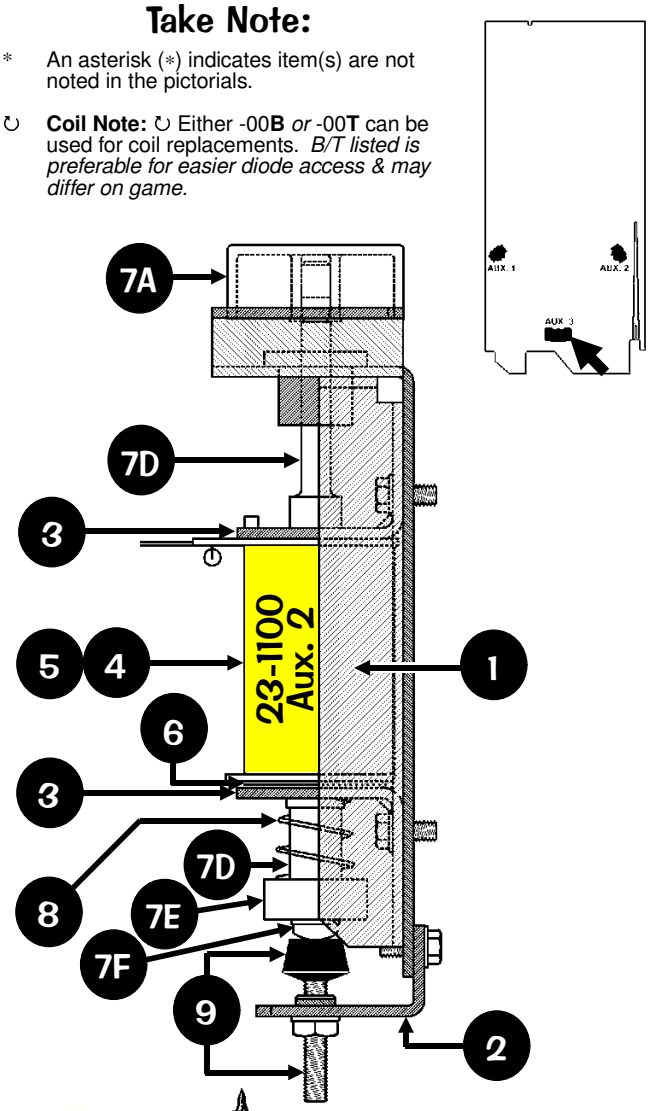

Table of Contents

☐ COILS DETAILED CHART TABLE 100

• Chapter 1, Backbox Wiring 101
- ■ Backbox I/O Power Driver Board Detailed Wiring Diagram 101
- ■ Backbox Board Layout Wiring Diagram 102

• Chapter 2, Playfield Wiring 103
- ■ General Illumination Circuit Detailed Wiring Diagram 103
- ☐ Playfield Switch Wiring Diagram & Playfield Lamp Wiring Diagram 104
- ■ Playfield Terminal Strips, Fuses & Misc. Wiring Descriptions & Locations 105
- ☐ 2-Flipper Circuit Wiring Diagram 106

• Chapter 3, Cabinet Wiring 107
- ■ Transformer Power Wiring Diagram 107
- ☐ Cabinet / Coin Door Wiring Diagram 108

• Chapter 4, Printed Circuit Boards (PCBs) 109
- ■ Trough Up-Kicker Dual OPTO Boards Theory of Operation & Schematic ..... (Top) 109
- ■ Trough Up-Kicker Dual OPTO Boards Component Layout & Parts ..... (Bot) 109
- ☐ OPTO Troubleshooting ..... (Top) 110
- ☐ Trough Dual OPTO Boards Alignment / Tests for LED1 & LED2 110-111
- ■ Dot Matrix Display / Display Controller Bd. Combined Display Connections 112
- ☐ Display Power Supply Board Schematic, Component Layout & Parts 113
- ■ Display Controller Board Schematic 114-115
- ■ Display Controller Board Component Layout & Parts 116
- ☐ I/O Power Driver Board Theory of Operation 117
- ☐ I/O Power Driver Board Schematic
  (Sheet 1 of 5), (Sheet 2 of 5), (Sheet 3 of 5), (Sheet 4 of 5), (Sheet 5 of 5) 118-127
- ☐ I/O Power Driver Board Component Layout 128
- ☐ I/O Power Driver Board Parts 129
- ■ CPU/Sound Board II (with ATMEL Processor) Theory of Operation 131
- ■ CPU/Sound Board II (with ATMEL Processor) Schematic
  (Sheet 1 of 4), (Sheet 2 of 4), (Sheet 3 of 4), (Sheet 4 of 4) 132-139
- ■ CPU/Sound Board II (with ATMEL Processor) Component Layout 140
- ■ CPU/Sound Board II (with ATMEL Processor) Parts 141
- ☐ Playfield Switch Single OPTO Transmitter & Receiver Boards Schematic,
  Component Layout & Parts 142
- ■ Back Panel Switch Mini OPTO Transmitter & Receiver Boards Schematic,
  Component Layout & Parts ..... (Top) 143
- ☐ Back Panel OPTO Trans./Rec. Amplifier Bd. Component Layout & Parts ..... (Bot) 143
- ■ Playfield 19-LED PC Board Component Layout 144
- ☐ UK & Special App. 3X Transistor Driver Bd. Schematic & Component Layout 145
- ☐ UK 3X Transistor Driver Bd. for Up-Posts & P/F 19-LED Overview & Wiring 146
- ☐ UK 3X Trans. Driver Board ... with the Tournament Serial Interface (TSI) Board 147
- ■ Tournament Serial Interface Board Schematic 148-149
- ■ Tournament Serial Interface Board Component Layout 150

Visit **www.SternPinball.com/schematics.htm** for the latest 11" X 17" Schematics (or "Split 8-1/2" X 11") for the **Display Power Supply, Display Controller, I/O Power Driver & CPU/Sound Boards** (White Star™ System Only). Along with the schematics you'll find the component layout and theory of operation. Keep visiting as these files are continuously improved with more search links in the documents. The files are in PDF format (Adobe® Reader required). They may be slow to open in the website only, but are much more responsive when you download them to your hardrive. Inside the schematics you can use e-mail links which will open your browser's e-mail program and address a new e-mail directed to a another sheet in the schematic set (further instructions within documents). To "download" once open, in your browser click "File" "Send" "Page by eMail". It will be sent to your eMail Address, where there you can save the file to your hardrive.

All 11 X 17 Schematics and other PDF files are also available on CD-ROM.

Use the below ***Coils Detailed Chart Table*** in conjunction with *Sec.* ***5****, Chp.* ***1****, Backbox I/O Power Driver Board Detailed Wiring Diagram (I/O Board Connectors J6, J7, J8 & J9) and Backbox Board Layout Wiring Diagram:*

COILS DETAILED CHART TABLE

	High Current Coils Group 1	Drive Transistor	Driver Ouput Board	Power Line Color	Power Line Connection	Power Voltage	Drive Transistor Control Line Color	D.T. Control Line Connect	Coil GA-Turn or Bulb Type
#1	TROUGH UP-KICKER	Q1	▲ I/O Power Driver ▼	YEL-VIO	J10-P4/5	50v DC	BRN-BLK	J8-P1	26-1200 ↻ 090-5044-00T
#2	AUTO LAUNCH	Q2		YEL-VIO	J10-P4/5	50v DC	BRN-RED	J8-P3	24-940 ↻ 090-5036-00T
#3	LEFT VUK	Q3		YEL-VIO	J10-P4/5	50v DC	BRN-ORG	J8-P4	26-1200 ↻ 090-5044-00B
#4	TOP VUK	Q4		YEL-VIO	J10-P4/5	50v DC	BRN-YEL	J8-P5	26-1200 ↻ 090-5044-00B
#5	RIGHT VUK	Q5		YEL-VIO	J10-P4/5	50v DC	BRN-GRN	J8-P6	26-1200 ↻ 090-5044-00B
#6	RING MAGNET	Q6		VIO-YEL	J10-P3	50v DC	BRN-BLU	J8-P7	20½-480 ↻ 090-5064-02
#7	RIGHT TOWER (D O TS)	Q7		YEL-VIO	J10-P4/5	50v DC	BRN-VIO	J8-P8	23-800 090-5001-NL
#8	LOOP DIVERTER	Q8		GRY-YEL~3A Fuse~YEL-VIO	J10-P1/2	50v DC	BRN-GRY	J8-P9	22-1080 ↻ 090-5032-00T

D iode O n T erminal S trip (if noted)

	High Current Coils Group 2	Drive Transistor	Driver Ouput Board	Power Line Color	Power Line Connection	Power Voltage	Drive Transistor Control Line Color	D.T. Control Line Connect	Coil GA-Turn or Bulb Type
#9	LEFT BUMPER	Q9	▲ I/O Power Driver ▼	YEL-VIO	J10-P4/5	50v DC	BLU-BRN	J9-P1	26-1200 ↻ 090-5044-00T
#10	RIGHT BUMPER	Q10		YEL-VIO	J10-P4/5	50v DC	BLU-RED	J9-P2	26-1200 ↻ 090-5044-00T
#11	BOTTOM BUMPER	Q11		YEL-VIO	J10-P4/5	50v DC	BLU-ORG	J9-P4	26-1200 ↻ 090-5044-00T
#12	NOT USED	Q12					BLU-YEL	J9-P5	
#13	ORBIT PIN	Q13		BRN	J7-P1	20v DC	BLU-GRN	J9-P6	26-1200 ↻ 090-5044-00B
#14	FLASH: HELMS DEEP RT	Q14		ORG	J6-P10	50v DC	BLU-BLK	J9-P7	#906 Bulb 165-5004-00
#15	LEFT FLIPPER (50v RED/YEL)	Q15		GRY-YEL~3A Fuse~RED-YEL	J10-P1/2	50v DC	ORG-GRY	J9-P8	22-900 ↻ 090-5020-20T
#16	RIGHT FLIPPER (50v RED/YEL)	Q16		BLU-YEL~3A Fuse~RED-YEL	J10-P1/2	50v DC	ORG-VIO	J9-P9	22-900 ↻ 090-5020-20T

	Low Current Coils Group 1	Drive Transistor	Driver Ouput Board	Power Line Color	Power Line Connection	Power Voltage	Drive Transistor Control Line Color	D.T. Control Line Connect	Coil GA-Turn or Bulb Type
#17	LEFT SLINGSHOT	Q17	▲ I/O Power Driver ▼	BRN	J7-P1	20v DC	VIO-BRN	J7-P2	23-800 ↻ 090-5001-00T
#18	RIGHT SLINGSHOT	Q18		BRN	J7-P1	20v DC	VIO-RED	J7-P3	23-800 ↻ 090-5001-00T
#19	TOP SAUCER	Q19		BRN	J7-P1	20v DC	VIO-ORG	J7-P4	26-1200 ↻ 090-5044-00B
#20	BALROG MOTOR RELAY	Q20		BRN	J7-P1	20v DC	VIO-YEL	J7-P6	DC Relay 520-5066-00
#21	SWORD LOCK RELEASE	Q21		BRN	J7-P1	20v DC	VIO-GRN	J7-P7	27-1500 ↻ 090-5004-00T
#22	BALROG MOTOR	Q22		BRN	J7-P1	20v DC	VIO-BLU	J7-P8	Motor 041-5088-01
#23	FLASH: HELMS DEEP LT	Q23		ORG	J6-P10	20v DC	VIO-BLK	J7-P9	#906 Bulb 165-5004-00
#24	OPTIONAL COIL	Q24		RED	J16-P7	5v DC	VIO-GRY	J7-P10	Opt. 5v

	Low Current Coils Group 2	Drive Transistor	Driver Ouput Board	Power Line Color	Power Line Connection	Power Voltage	Drive Transistor Control Line Color	D.T. Control Line Connect	Coil GA-Turn or Bulb Type
#25	FLASH: POPS X3	Q25	▲ I/O Power Driver ▼	ORG	J6-P10	20v DC	BLK-BRN	J6-P1	#906 Bulb 165-5004-00
#26	FLASH: RING	Q26		ORG	J6-P10	20v DC	BLK-RED	J6-P2	#906 Bulb 165-5004-00
#27	FLASH: BACK PANEL	Q27		ORG	J6-P10	20v DC	BLK-ORG	J6-P3	#906 Bulb 165-5004-00
#28	NOT USED	Q28					BLK-YEL	J6-P4	
#29	FLASH: RINGWRAITH	Q29		ORG	J6-P10	20v DC	BLK-GRN	J6-P5	#906 *Red* 165-5004-02
#30	FLASH: SWORD	Q30		ORG	J6-P10	20v DC	BLK-BLU	J6-P6	#906 Bulb 165-5004-00
#31	FLASH: DESTROY THE RING	Q31		ORG	J6-P10	20v DC	BLK-VIO	J6-P7	#89 Bulb 165-5000-89
#32	FLASH: BALROG	Q32		ORG	J6-P10	20v DC	BLK-GRY	J6-P8	#89 Bulb 165-5000-89

Note: In Test Flash Lamps Menu ("Flash" Icon), Flashers tested are all Flash Lamps located between Q1-Q32 (This Game: Q14, Q23 & Q25-Q27, Q29-Q32)

	Auxiliary (UK ONLY)	Drive Transistor	Driver Ouput Board	Power Line Color	Power Line Connection	Power Voltage	Drive Transistor Control Line Color	D.T. Control Line Connect	Coil GA-Turn
	AUX 1: LEFT UP/DOWN POST	Q1	Solenoid Expander Auxiliary	BRN	J7-P1	20v DC	WHT	CN2-P5	26-1200 ↻ 090-5044-00T
	AUX 2: CENTER UP/DOWN POST	Q2		BRN	J7-P1	20v DC	RED	CN2-P4	23-1100 ↻ 090-5030-00T
	AUX 3: RIGHT UP/DOWN POST	Q3		BRN	J7-P1	20v DC	ORG	CN2-P3	26-1200 ↻ 090-5044-00T

↻ **Coil Note:** ↻ Either -00**B** *or* -00**T** can be used for coil replacements. *B/T listed is preferable for easier diode access & may differ on game.*

Backbox Wiring

Backbox I/O Power Driver Board Detailed Wiring Diagram

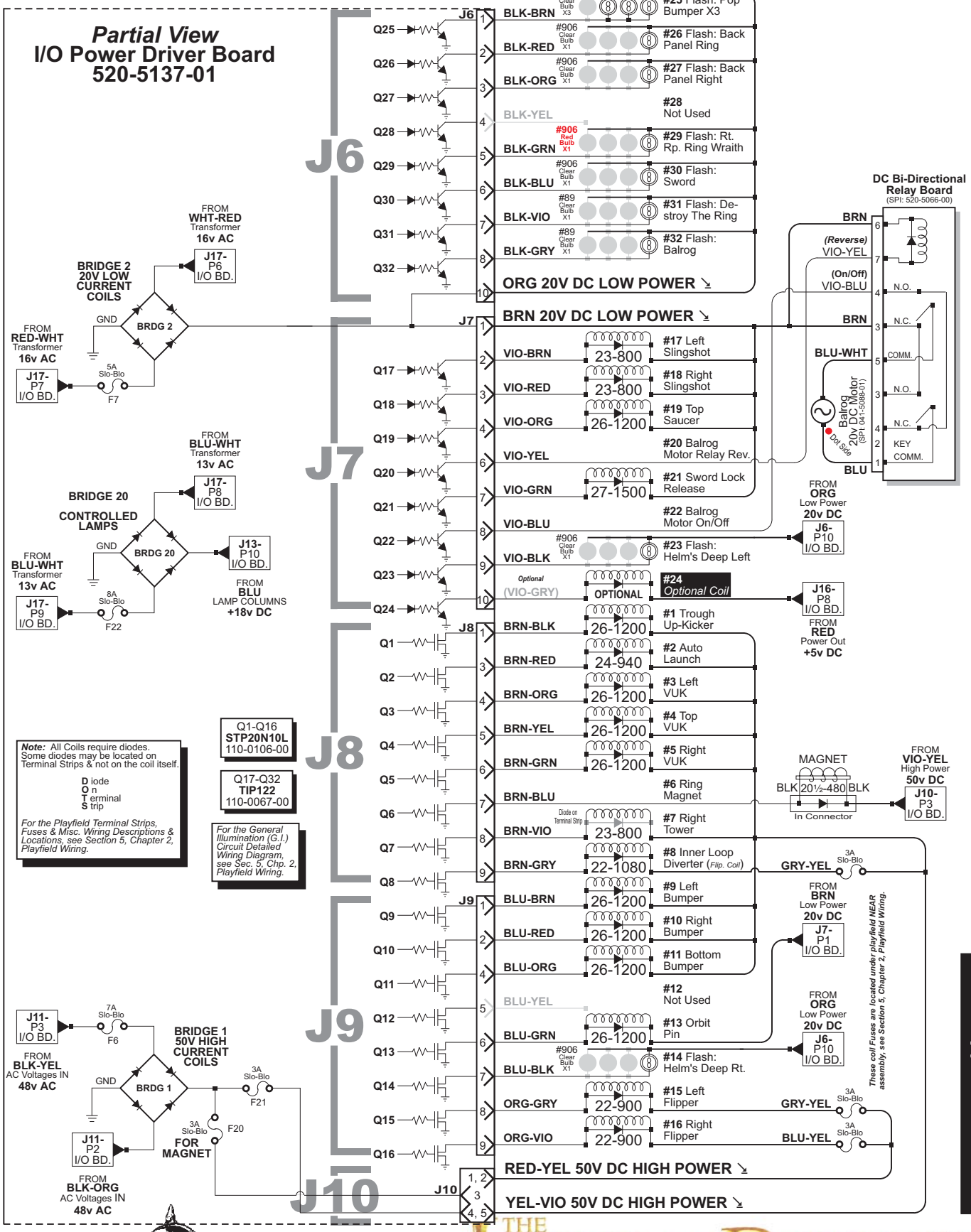

Backbox Board Layout Wiring Diagram

See Section 5, Chapter 4, Printed Circuit Boards (PCBs), Pages 145-150, for UK & Special Application(s) 3X Transistor Driver Board and ToPS™ Overview & Wiring, regarding the use of J2 & J3.

J3 *ONLY* used if UK GAME (Aux. Driver Bd. Required)
or
if ToPS™ Kit is installed, Tournament Serial Interface (TSI) Board required.
or
if Printer Interface Board is used *(see Sec. 5, Chp. 3, Cabinet/Coin Door Wiring Diagram, bottom right corner).*

J2 I/O to under Playfield Connector for 19-LED Board (Rings)..

Move Conn. J2 to J4 on TSI Bd. if ToPS™ Kit installed, then connect the Tournament Connector from J1 on TSI Bd. to J2 I/O Board.

Note: If the Printer Interface Board is used, the Dot Display or Tournament Wiring must be disconnected from J2 and/or J3.

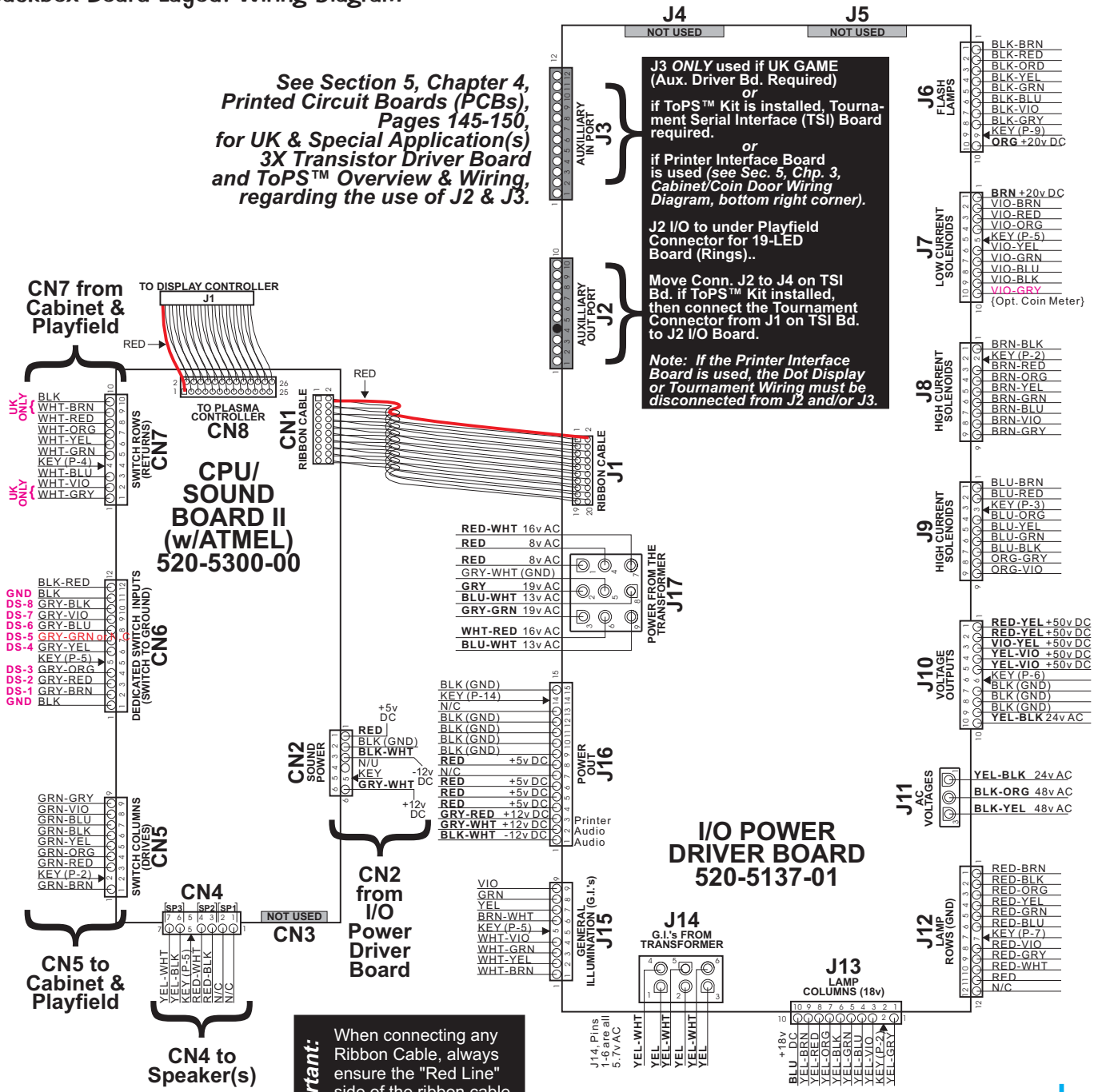

Important: When connecting any Ribbon Cable, always ensure the "Red Line" side of the ribbon cable goes to the Pin-1 side of any Dual 0.1" Header Connector.

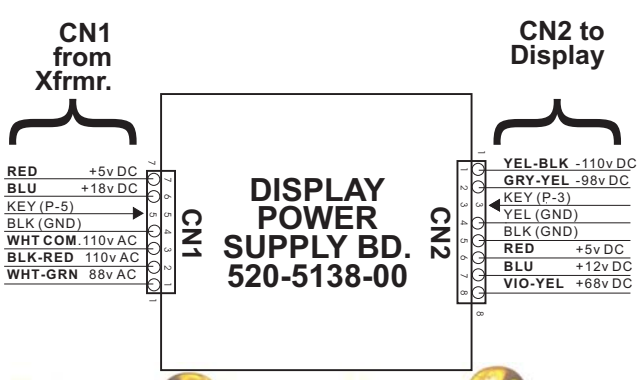

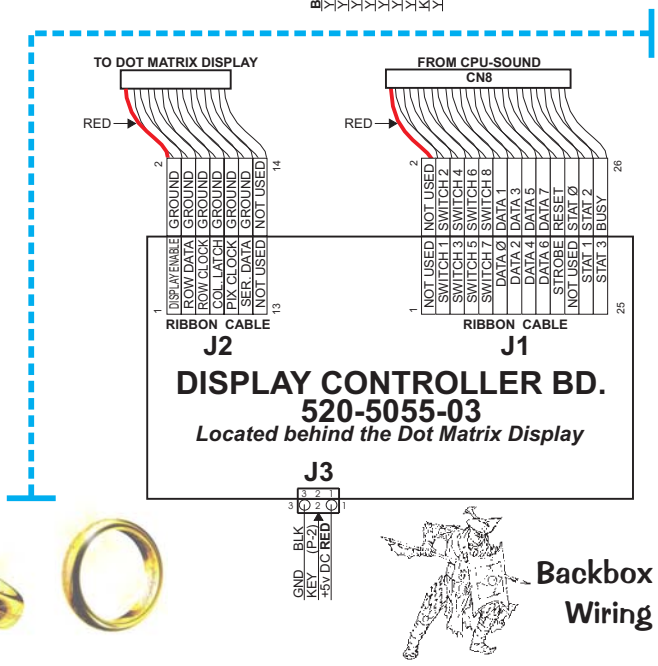

Playfield Wiring

General Illumination Circuit Detailed Wiring Diagram

Below: Bottom of Playfield shown as if leaning up against the Backbox.

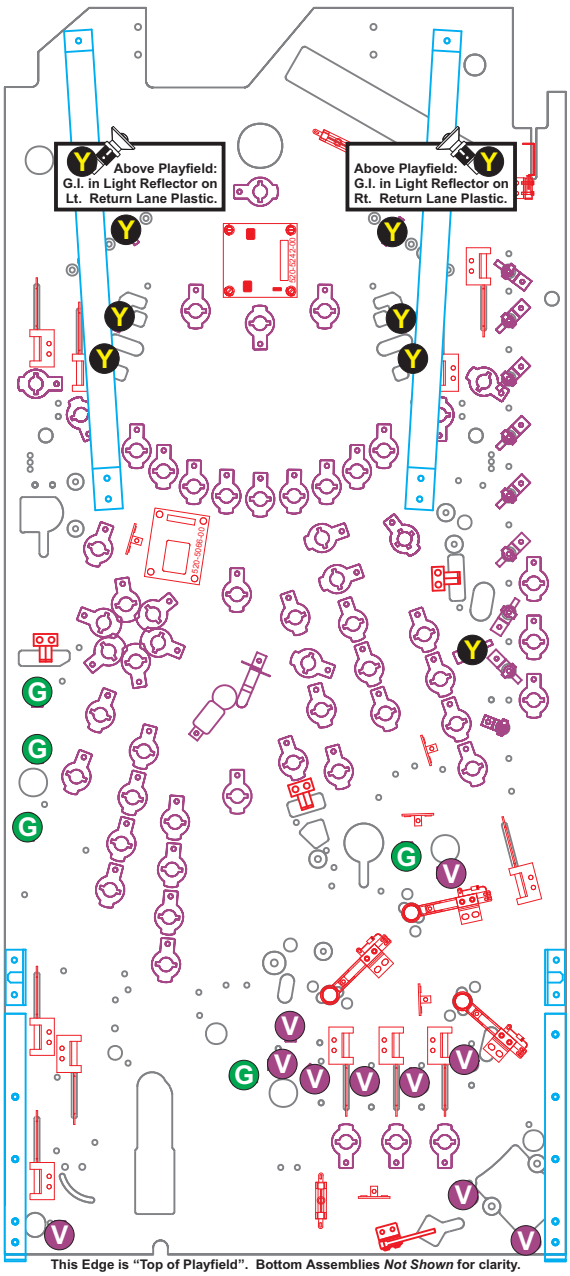

This Edge is "Top of Playfield". Bottom Assemblies *Not Shown* for clarity.

Below: Located at the top of the P/F, rear view of the Back Panel.

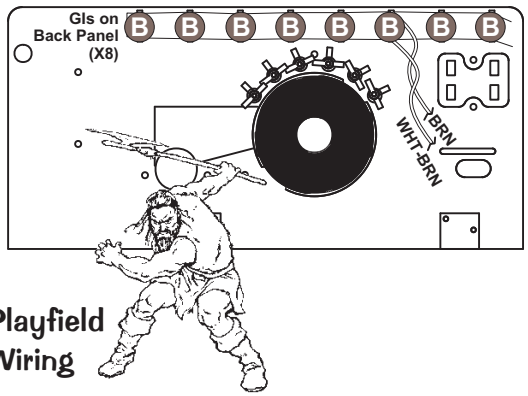

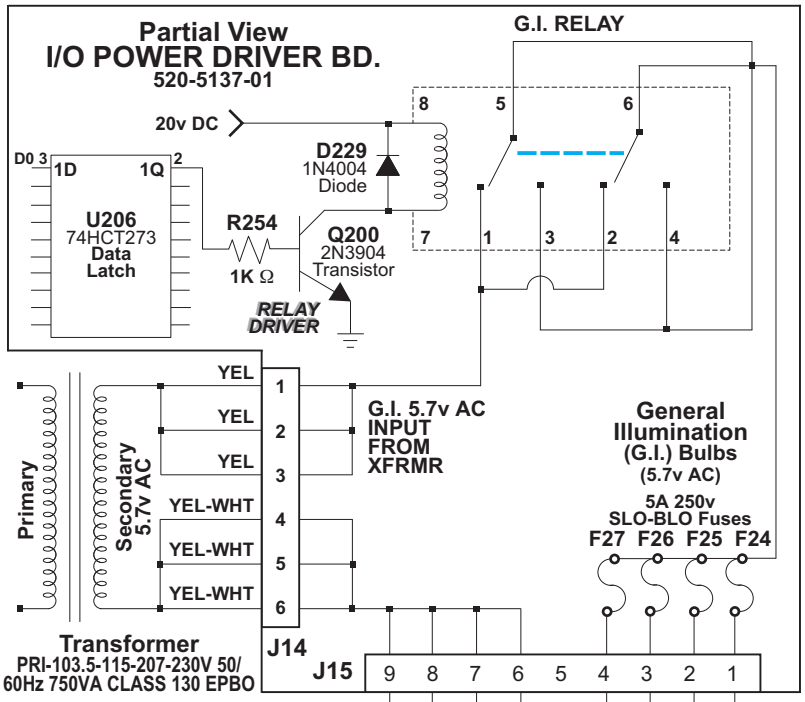

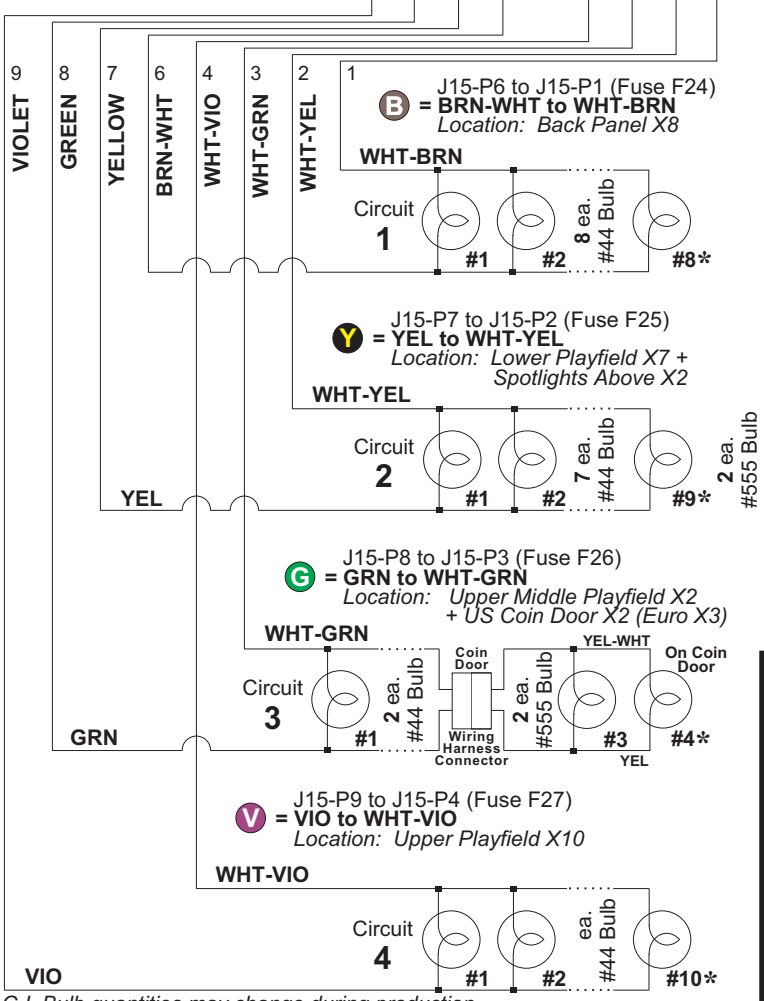

* G.I. Bulb quantities may change during production.

Playfield Switch Wiring Diagram

Note: All Switch, Lamp & Coil assemblies require diodes. Some diodes are ***located under the playfield*** on Terminal Strips ***or*** Diode Boards and not on the assemblies.

For Switch(es): *9, 25 & 30*

DOTS Diode On Terminal Strip *-or-* **DODB** Diode On Diode Board

Switch Drive Transistor Source №: **2N3904**

COLUMN DRIVE	SWITCH DRIVE Wire & Transistor	CN5 PIN
1	GRN-BRN Q1	1
2	GRN-RED Q2	3
3	GRN-ORG Q3	4
4	GRN-YEL Q4	5
5	GRN-BLK Q5	6
6	GRN-BLU Q6	7
7	GRN-VIO Q7	8
8	GRN-GRY Q8	9

CPU/Sound Board

N/C → 10

ROW RETURN	Wire & IC SWITCH RETURN	CN7 PIN
1	WHT-BRN U400	9
2	WHT-RED U400	8
3	WHT-ORG U400	7
4	WHT-YEL U400	6
5	WHT-GRN U401	5
6	WHT-BLU U401	3
7	WHT-VIO U401	2
8	WHT-GRY U401	1

Switch Return IC Source №: **LM339AN**

Switch	Description	Switch	Description	Switch	Description	Switch	Description	Switch	Description	Switch	Description	Switch	Description	Switch	Description
Switch 1	Lt. Button (UK ONLY)	Switch 9	Left VUK	Switch 17	Sword Lock High	Switch 25	Right Ramp Enter	Switch 33	Mini PF U.L.	Switch 41	Top VUK	Switch 49	Left Bumper	Switch 57	Left Outlane
Switch 2	4th Coin Slot	Switch 10	Stand-Up	Switch 18	Sword Lock Mid	Switch 26	Not Used	Switch 34	Mini PF U.R.	Switch 42	Inner Loop	Switch 50	Right Bumper	Switch 58	Left Return Lane
Switch 3	6th Coin Slot ✻	Switch 11	4-Ball Trough #1 (Left)	Switch 19	Sword Lock Low	Switch 27	Not Used	Switch 35	Mini PF L.L.	Switch 43	Left Top Lane	Switch 51	Bottom Bumper	Switch 59	Left Slingshot
Switch 4	Right Coin Slot	Switch 12	4-Ball Trough #2	Switch 20	Right Orbit Low	Switch 28	Balrog Hit	Switch 36	Mini PF L.R.	Switch 44	Middle Top Lane	Switch 52	Spinner	Switch 60	Right Outlane
Switch 5	Center Coin Slot / DBA	Switch 13	4-Ball Trough #3	Switch 21	Right Orbit Hi	Switch 29	Palantir	Switch 37	Left Orbit Low	Switch 45	Right Top Lane	Switch 53	Spot Ring	Switch 61	Right Return Lane
Switch 6	Left Coin Slot	Switch 14	4-Ball Trough VUK Opto	Switch 22	Rail Ramp Exit	Switch 30	Right VUK	Switch 38	Left Orbit Hi	Switch 46	Top Saucer	Switch 54	Start Button	Switch 62	Right Slingshot
Switch 7	5th Coin Slot ✻	Switch 15	4-Ball Stack-ing Opto	Switch 23	Right Ramp Target	Switch 31	Balrog Open	Switch 39	Left Ramp Enter	Switch 47	Ring Made	Switch 55	Tournament Start	Switch 63	Not Used
Switch 8	Rt. Button (UK ONLY)	Switch 16	Shooter Lane	Switch 24	Right Ramp Made	Switch 32	Balrog Closed	Switch 40	Left Ramp Made	Switch 48	Back Trough	Switch 56	Plumb Bob Tilt	Switch 64	Not Used

✻ Future Expansion

Playfield Lamp Wiring Diagram

Please Note: *Switch & Lamp Descriptions may differ slightly than that of the Dot Display due to space restraints.*

Note: All Switch, Lamp & Coil assemblies require diodes. Some diodes are ***located under the playfield*** on Terminal Strips ***or*** Diode Boards and not on the assemblies.

For Lamp(s): *N/A*

DOTS Diode On Terminal Strip *-or-* **DODB** Diode On Diode Board

J13-Pin 10 is Power Out for +18v DC to the Display Power Supply Bd at **CN1-Pin 6** ← BLUE 10

COLUMN DRIVE	Wire & IC LAMP DRIVE	PIN J13
1	YEL-BRN U17	9
2	YEL-RED U16	8
3	YEL-ORG U15	7
4	YEL-BLK U14	6
5	YEL-GRN U13	5
6	YEL-BLU U12	4
7	YEL-VIO U11	3
8	YEL-GRY U10	1

Lamp Drive IC Source №: **VN02N**
Lamp Return Transistor Source №: **STP19N06L**

I/O Power Driver Board

ROW RETURN	LAMP RETURN Wire & Transistor	J12 PIN
1	RED-BRN Q33	1
2	RED-BLK Q34	2
3	RED-ORG Q35	3
4	RED-YEL Q36	4
5	RED-GRN Q37	5
6	RED-BLU Q38	6
7	RED-VIO Q39	7
8	RED-GRY Q40	8
9	RED-WHT Q41	9
10	RED Q42	10

From I/O Pwr. Driver Board J16-Pins 9-15 → N/C 12

Lamp	Description	Lamp	Description	Lamp	Description	Lamp	Description	Lamp	Description	Lamp	Description	Lamp	Description	Lamp	Description
Lamp 1	(K) EEP	Lamp 2	K (E) EP	Lamp 3	KE (E) P	Lamp 4	KEE (P)	Lamp 5	The Fellowship of the Ring	Lamp 6	The Two Towers	Lamp 7	The Return of the King	Lamp 8	Shoot Again
Lamp 9	Pippin	Lamp 10	Merry	Lamp 11	Sam	Lamp 12	Aragorn	Lamp 13	Frodo	Lamp 14	Gandalf	Lamp 15	Legoles	Lamp 16	Gimli
Lamp 17	Boromir	Lamp 18	Mystery	Lamp 19	Frodo Arrow	Lamp 20	Destroy Ring	Lamp 21	Mode Start	Lamp 22	Palantir	Lamp 23	Palantir Globe	Lamp 24	Spot Ring
Lamp 25	Pippin Arrow	Lamp 26	Gift of the Elves	Lamp 27	Light Extra Ball	Lamp 28	Ring Multiball	Lamp 29	Big Points	Lamp 30	Light Special	Lamp 31	Super Ring Frenzy	Lamp 32	2X Scoring
Lamp 33	Legoles Arrow	Lamp 34	Left Ramp Man Ring	Lamp 35	Left Ramp Dwarf Ring	Lamp 36	Left Ramp Elf Ring	Lamp 37	Gandalf Arrow	Lamp 38	Center Loop Man Ring	Lamp 39	Cntr. Loop Dwarf Ring	Lamp 40	Center Loop Elf Ring
Lamp 41	Gimli Arrow	Lamp 42	Extra Ball	Lamp 43	Gollum Multiball	Lamp 44	Special	Lamp 45	Merry Arrow	Lamp 46	Right Orbit Man Ring	Lamp 47	Rt. Orbit Dwarf Ring	Lamp 48	Right Orbit Elf Ring
Lamp 49	Aragorn Arrow	Lamp 50	Right Ramp Man Ring	Lamp 51	Right Ramp Dwarf Ring	Lamp 52	Right Ramp Elf Ring	Lamp 53	Lock	Lamp 54	Lanes	Lamp 55	Tower	Lamp 56	Flipper
Lamp 57	(O) RC	Lamp 58	O (R) C	Lamp 59	OR (C)	Lamp 60	Paths of the Dead U.L.	Lamp 61	Paths of the Dead U.R.	Lamp 62	Paths of the Dead L.L.	Lamp 63	Paths of the Dead L.R.	Lamp 64	Shooter Lane #1 Bot
Lamp 65	Shooter Lane #2	Lamp 66	Shooter Lane #3	Lamp 67	Shooter Lane #4	Lamp 68	Shooter Lane #5	Lamp 69	Shooter Lane #6	Lamp 70	Shooter Lane #7	Lamp 71	Shooter Lane #8	Lamp 72	Shooter Lane #9
Lamp 73	Escape the Ringwraiths	Lamp 74	Gandalf vs. Saruman	Lamp 75	Warg Attack	Lamp 76	War of the Ents	Lamp 77	Battle with Shelob	Lamp 78	Destroy the Ring	Lamp 79	Tourna-ment Button	Lamp 80	Start Button

Playfield Terminal Strips, Fuses & Misc. Wiring Descriptions & Locations

Please Note: *Terminal Strip(s), Diode Board(s) and/or Fuse Holder(s) locations shown, represent the general location (your game may differ slightly).*

All fuses are rated:
3A 250v Slo-Blo
Do Not Over-Fuse

Bottom of Playfield Shown as if leaning up against the Backbox.

LOWER LEFT FLIPPER FUSE
RED-YEL 3A S.B. GRY-YEL

LOWER RIGHT FLIPPER FUSE
RED-YEL 3A S.B. BLU-YEL

LOOP DIVERTER FUSE
YEL-VIO 3A S.B. GRY-YEL

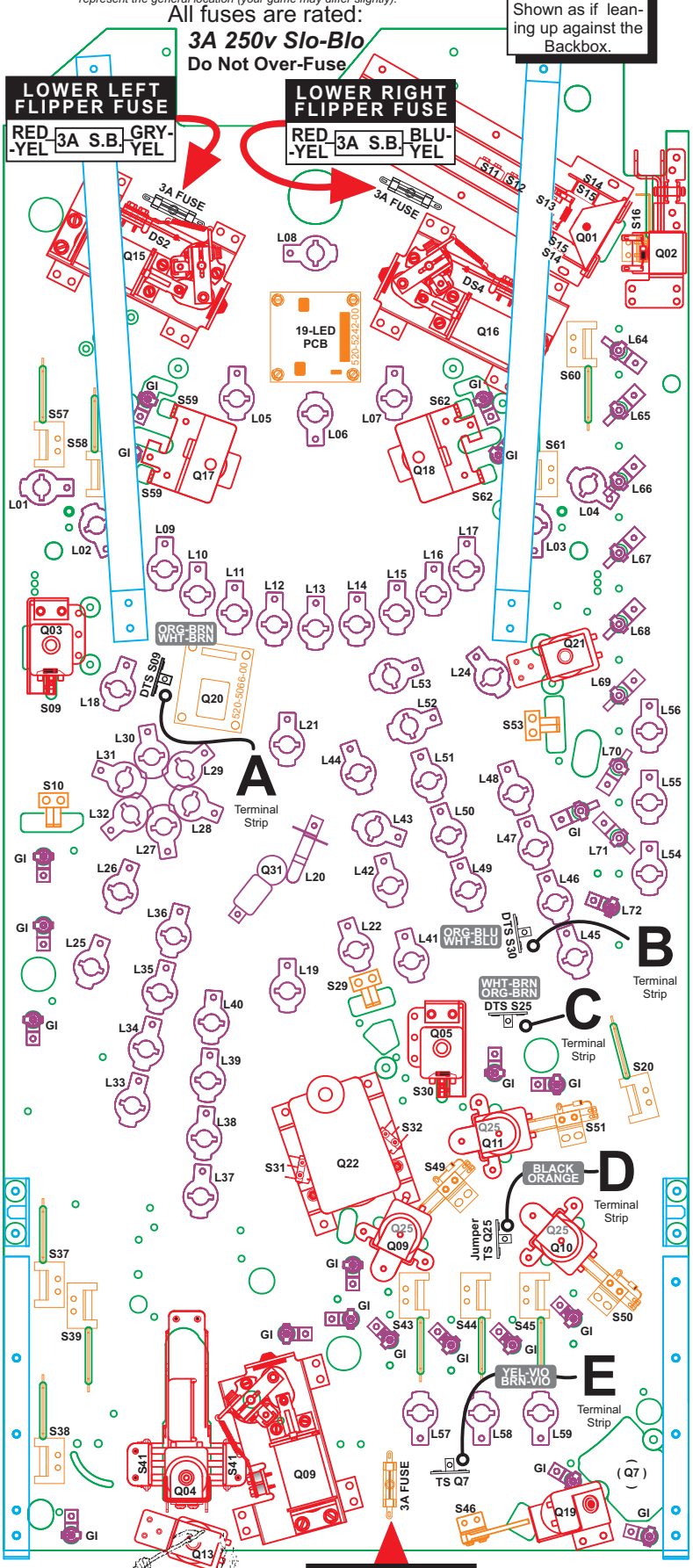

Explanation:
All Switch, Lamp & Coil assemblies require diodes. Some diodes are ***located under the playfield*** on Terminal Strips ***or*** Diode Boards and not on the assemblies. The Switch and Lamp Matrix Grids also note which Switch or Lamp has a diode on a Terminal Strip *(noted by **"DOTS"** meaning: "**D**iode **O**n **T**erminal **S**trip") or on a Diode Board (noted by **"DODB"** meaning: "**D**iode **O**n **D**iode **B**oard").*

Legend:

S *= Switch Matrix Number (Below P/F Only)*
L *= Lamp Matrix Number (Below P/F Only)*
Q *= Coil / Flash (see Page 101)*
DTS / TS *= (Diode) Terminal Strips (A-E)*

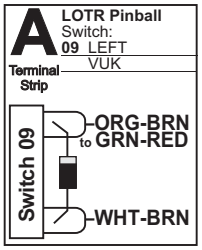

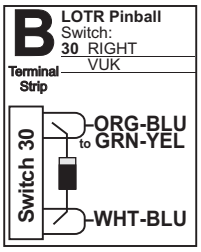

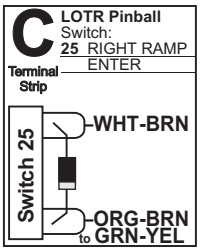

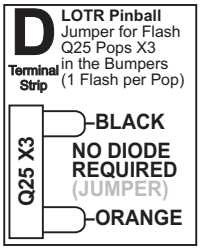

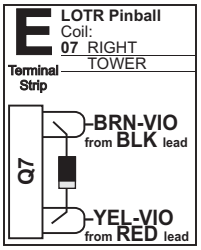

See the Pink Pages, Playfield - General Parts & Switches (Below) (Pg. 66) **for Terminal Strips, Diodes, Fuses and Fuse Holders Part Numbers.**

2-Flipper Circuit Wiring Diagram

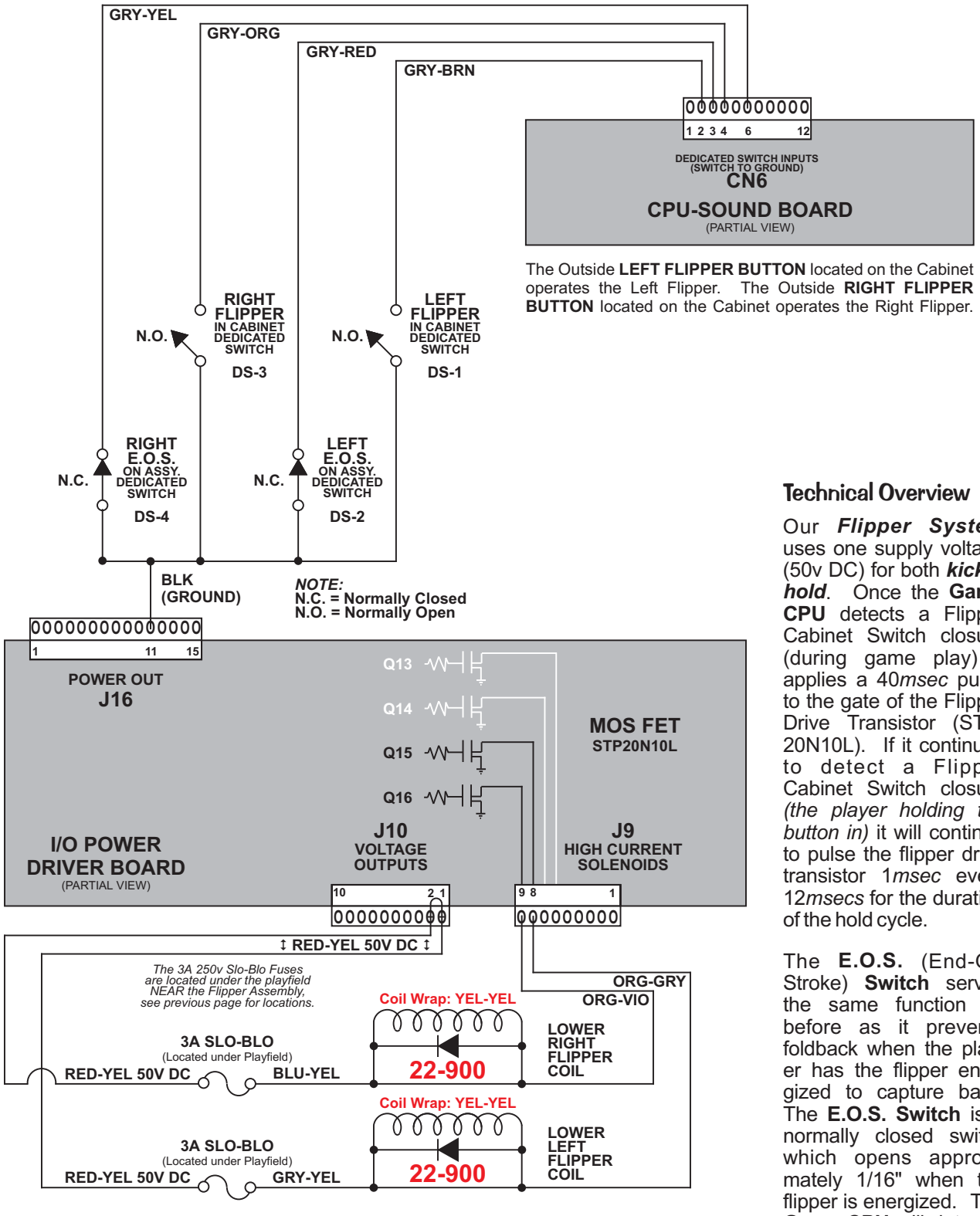

The Outside **LEFT FLIPPER BUTTON** located on the Cabinet operates the Left Flipper. The Outside **RIGHT FLIPPER BUTTON** located on the Cabinet operates the Right Flipper.

Technical Overview

Our ***Flipper System*** uses one supply voltage (50v DC) for both ***kick*** & ***hold***. Once the **Game CPU** detects a Flipper Cabinet Switch closure (during game play) it applies a 40*msec* pulse to the gate of the Flipper Drive Transistor (STP-20N10L). If it continues to detect a Flipper Cabinet Switch closure *(the player holding the button in)* it will continue to pulse the flipper drive transistor 1*msec* every 12*msecs* for the duration of the hold cycle.

The **E.O.S.** (End-Of-Stroke) **Switch** serves the same function as before as it prevents foldback when the player has the flipper energized to capture balls. The **E.O.S. Switch** is a normally closed switch which opens approximately 1/16" when the flipper is energized. The **Game CPU** will detect a switch closure if the flipper bat is forced back by a high velocity shot or rebound on the playfield and will apply another 40*msec* pulse of 50v DC to the coil.

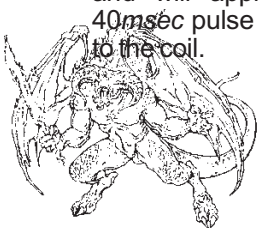

Cabinet Wiring

Transformer Power Wiring Diagram

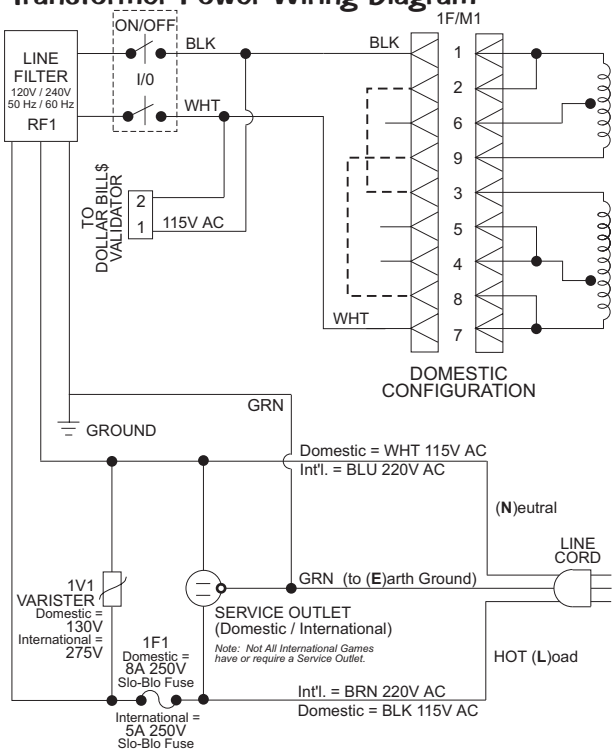

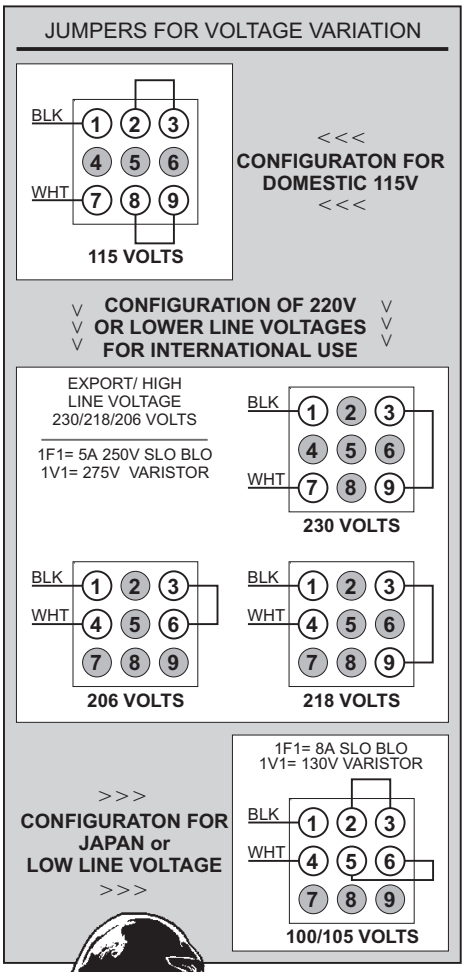

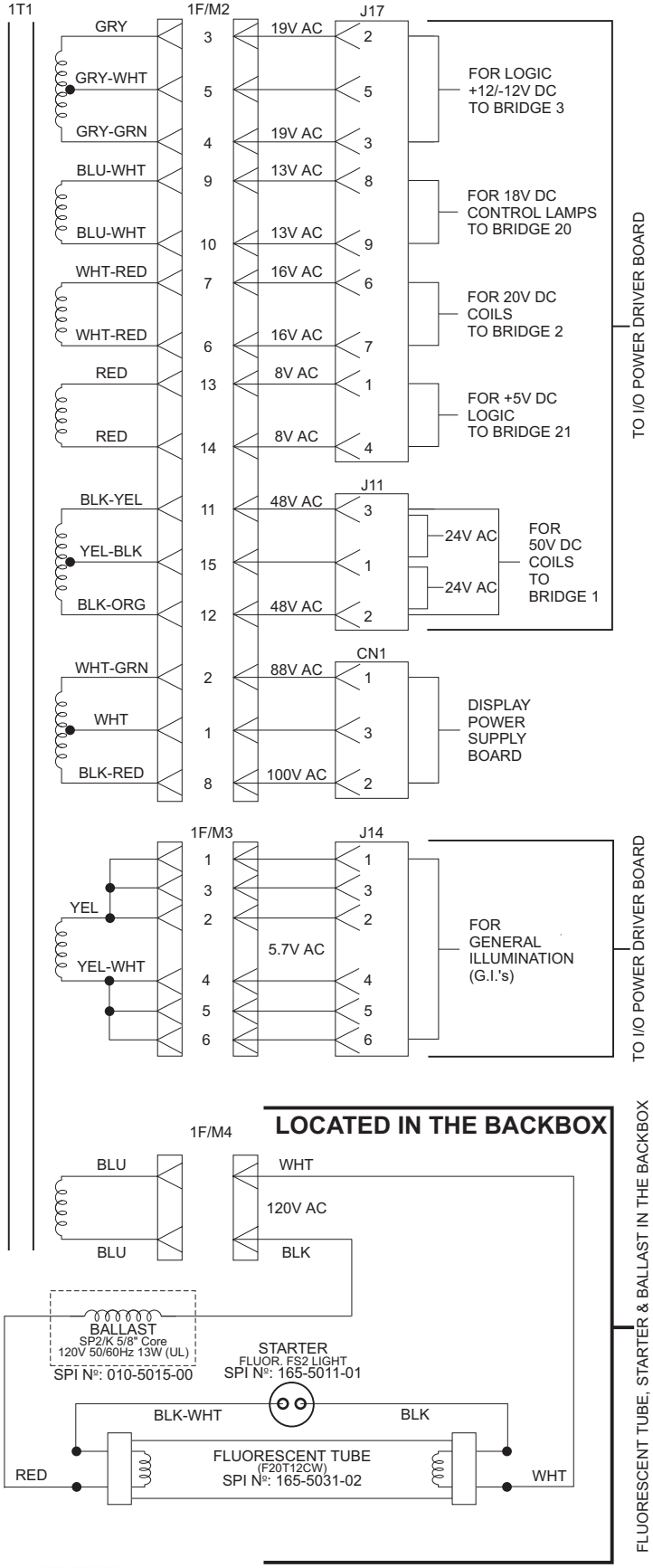

Cabinet / Coin Door Wiring Diagram

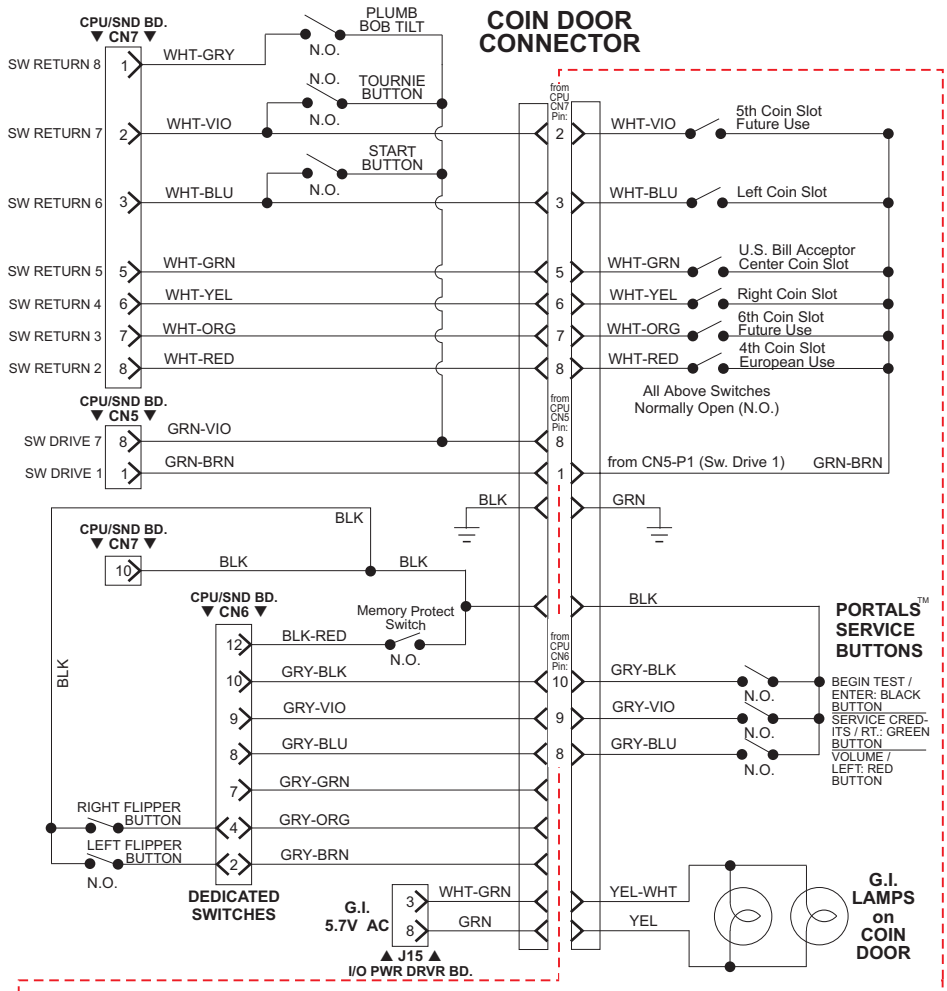

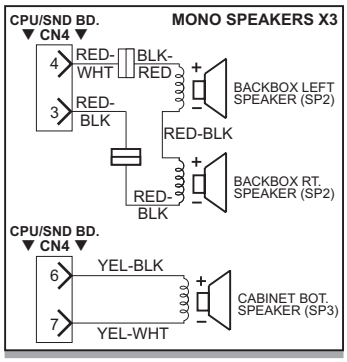

TO COIN METER

J16-7 +5V DC I/O DRVR BD	22	RED
J7-10 Q24 I/O DRVR BD	78	VIO-GRY
N/C		

FOR THE PRINTER SUB-ASSEMBLY

GROUND	00	BLK
J16-7 +5V DC I/O DRVR BD	22	RED
J16-3 +12V DC I/O DRVR BD	82	GRY-RED

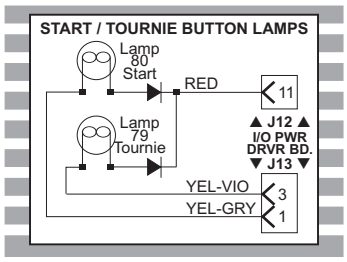

UK ONLY: 2 Extra Cabinet Buttons for the Post Save™ Feature are used. The Left Button operates the Left Outlane Ball Deflector. The Right Button operates the Right Outlane Ball Deflector. Both buttons pushed together operate the Center Up/Down Post. Both buttons are located under the Flipper Buttons.

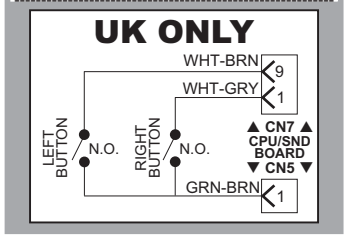

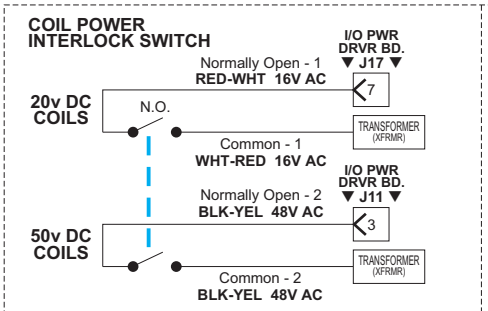

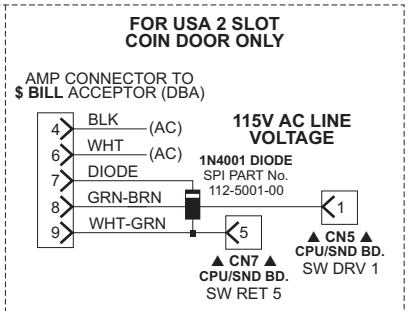

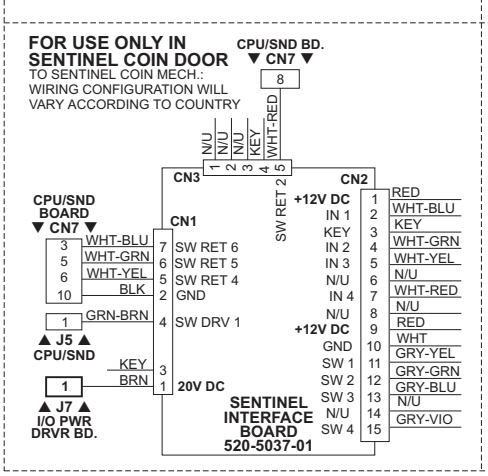

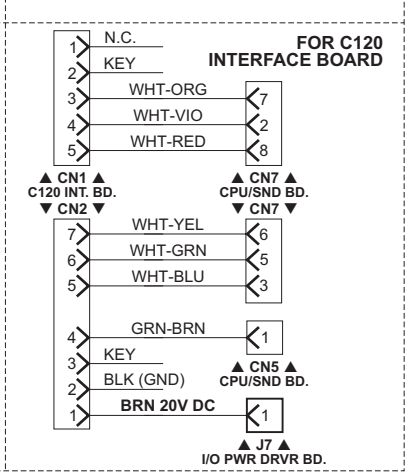

COIN DOOR

PRINTER INTERFACE OPTIONAL

Cable Wiring Harness SPI Part Nº:
036-5408-00
RS-232 Printer Interface Board SPI Part Nº:
520-5069-00

Connection Notes:

			PRINTER BOARD
I/O DRVR BD **J16-3**: **+12V DC**			CN1
I/O DRVR BD **J3-10**: **PRNTR CNT**	DATA LINES P1-P9	▲ J2 ▲ I/O PWR DRVR BD.	ORG-BRN 1, ORG-RED 2, ORG-BLK 3, KEY 4, ORG-YEL 5, ORG-GRN 6, ORG-BLU 7, ORG-VIO 8, ORG-GRY 9
I/O DRVR BD **J3-9**: **PRNTR CLK**			
I/O DRVR BD **J2-10**: **PRNTR ENABLE**			CN2
I/O DRVR BD **J3-1**: **PRNTR BUSY**			GRY-RED 1, KEY 2, GRN-WHT 3, BRN-WHT 4, ORG-WHT 5, N/C 6, BRN 7, N/C 8, RED 9, BLK 10
I/O DRVR BD **J16-7**: **+5V DC**			
CPU BD **CN7-10**:			

Printed Circuit Boards (PCBs)

Trough Up-Kicker Dual OPTO Boards Theory of Operation & Schematic

As light from the **Transmitter LED1** falls on the **Receiver LED1**, it generates a Positive Bias Voltage (0.7v to 1.5v) which is applied to the **Gate** (**G**) of **Q1 (Fet 2N5460)** turning **Q1** off. When **Q1** is held off, no current flows through **Q2**'s **(2N3906) Base** (**B**). With no *base current,* **Q2** is off and acts as an *OPEN SWITCH*. When the light is interrupted *(BLOCKED)* **R1** (Rec. Bd.) bleeds the gate voltage off of **Q1** allowing it to conduct, switching **Q2** on, which acts as a *CLOSED SWITCH*. The **LED2 (Trans/Rec) Circuit** operates identical as the **LED1 Circuit**.

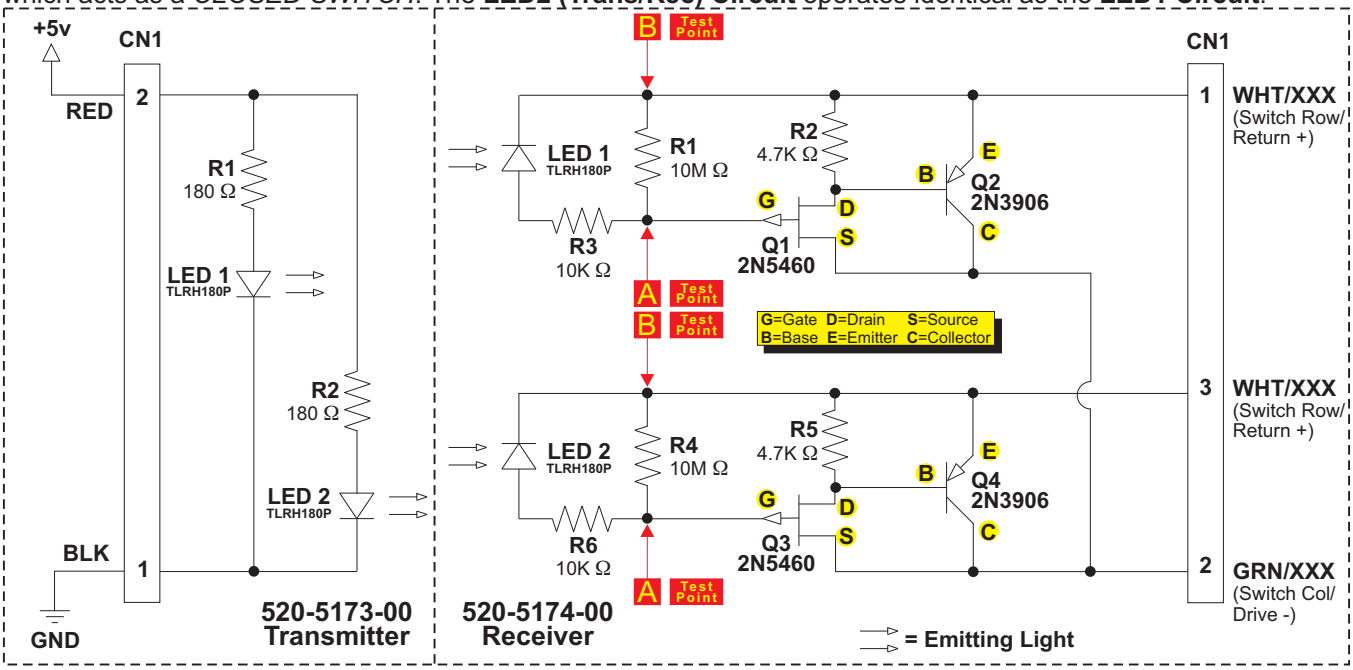

Trough Up-Kicker Dual OPTO Boards Component Layout & Parts

520-5173-00 (TRANS) **Boards Actual Size** **520-5174-00 (REC)**

(Screened Text Printed Larger for Clarity)

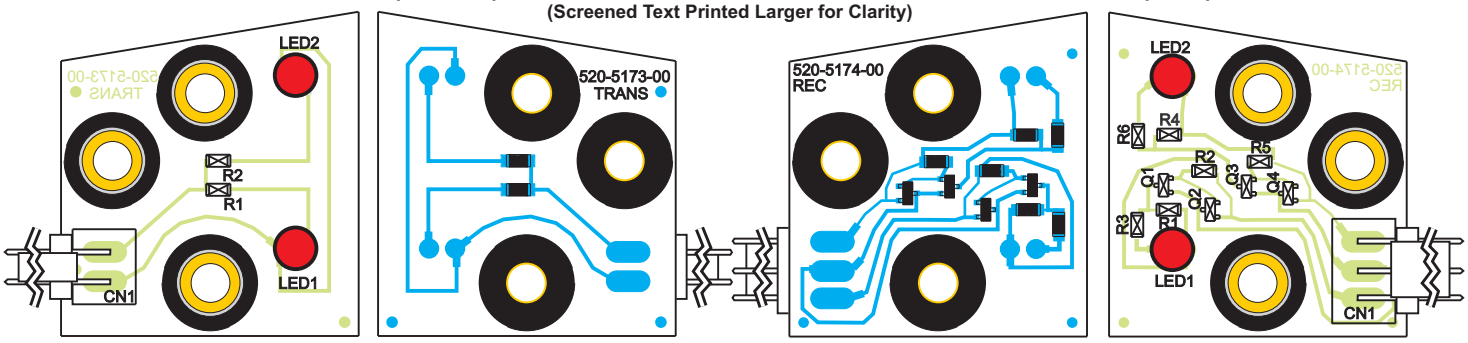

Front Side (LEDs & 2-Pin Connector) **Back Side** (Solder / Surface Mounts) **Back Side** (Solder / Surface Mounts) **Front Side** (LEDs & 3-Pin Connector)

ITEM	QTY	PART NUMBER	REF-DESIGNATOR	DESCRIPTION
A	**1**	**515-0173-00**	**Dual-OPTO Trans. Bd. Assy.**	**PCB Assy.** (with all **Items 1-5**)
—	**1**	**520-5173-00**	**Dual-OPTO Trans. Board**	**PCB Assy.** (with Items **1-3** only)
01	1	045-5111-02	CN1	2X, .156" Rt. Angle (26-60-5020) Conn.
02	**2**	**165-5052-00**	**LED1, LED2**	**LED TLRH180P** (**Ultra Bright Red**)
03	2	121-5067-00	R1, R2	180 Ω 1/8W Chip Res. (CRCW)
04	3	530-5308-02	n/a	OPTO PCB Brass Tube Spacer
05	3	545-5518-00	n/a	OPTO PCB Rubber Grommet
B	**1**	**515-0174-00**	**Dual-OPTO Rec. Bd. Assy.**	**PCB Assy.** (with all **Items 1-9**)
—	**1**	**520-5174-00**	**Dual-OPTO Rec. Board**	**PCB Assy.** (with **Items 1-7** only)
01	1	045-5111-03	CN1	3X, .156" Rt. Angle (26-60-5030) Conn.
02	**2**	**165-5052-00**	**LED 1, LED 2**	**LED TLRH180P** (**Ultra Bright Red**)
03	2	110-5006-00	Q1, Q3	2N5460, Transistor (P-FET SOT-23)
04	2	110-0086-00	Q2, Q4	**2N3906**, Transistor
05	2	121-5082-00	R1, R4	10M Ω 1/8W Chip Res. (CRCW)
06	2	121-5083-00	R2, R5	4.7K Ω 1/8W Chip Res. (CRCW)
07	2	121-5011-00	R3, R6	10K Ω 1/8W Chip Res. (CRCW)
08	3	530-5308-02	n/a	OPTO PCB Brass Tube Spacer
09	3	545-5518-00	n/a	OPTO PCB Rubber Grommet

Replacement Part:
LED TLRH180P
(T1-3/4 GaAlAs)
SPI Part №:
165-5052-00

OPTO Troubleshooting

1. Volt Meter Test (indicates normal operating condition):

A. **OPEN OPTO** (Light Falling on LED) = *SWITCH OPEN*. Place meter leads across points **A** and **B** on the **LED1 Circuit** *(Refer to Schematic Drawing on previous page, 520-5174-00 Receiver Side).* It should read approximately 0.8 - 1.2v DC. The **LED2 Circuit** operates the same.

B. **CLOSED OPTO** (Light Blocked) = *SWITCH CLOSED*. Place meter leads across points **A** and **B** on the **LED1 Circuit** *(Refer to Schematic Drawing on previous page, 520-5174-00 Receiver Side).* It should read approximately 0.0 - 0.1v DC. The **LED2 Circuit** operates the same.

2. Oscilloscope Test (indicates normal operating condition):

Fig. A

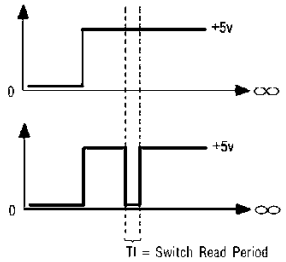

Fig. B

A. **OPEN OPTO** (Light Falling on LED) = *SWITCH OPEN*. Place Scope lead at **Pin-1** of OPTO Rec. Board with Scope Grounded (see Schematic). The Scope should display a **STEADY +5v** as shown in **Fig. A**, Wave Form Diagram.

B. **CLOSED OPTO** (Light Blocked) = *SWITCH CLOSED*. Place Scope lead at **Pin-1** of OPTO Rec. Board with Scope Grounded (see Schematic). The Scope should display a **PULSE STREAM** indicating **Q2** has switched "On" as shown in **Fig. B**, Wave Form Diagram. This is your Switch Drive Pulse.

3. Bench Test (See Fig. C):

Please Note: To perform this test you must use a spare 560Ω Pull-Up Resistor, SPI Nº: 121-5047-00

Disconnect the **OPTO Transmitter** / **Receiver Board** from the circuit. Connect one side of a 560Ω Pull-Up Resistor to **Pin-1** of the OPTO Receiver Bd. and the other side of the resistor to a 5v DC source. Connect **Pin-2** to GND. Connect a +5v DC source to **Pin-1** of the Transmitter & GND to **Pin-2**. Align with the Receiver OPTO approx. 3" distance. Using your Volt-Meter or an Oscilloscope, monitor **Pin-1** while *BLOCKING* and *UNBLOCKING* the ***BEAM*** from the Trans. The output will be approx. +5v DC when the ***BEAM IS NOT BLOCKED*** and approx. 0v when the ***BEAM IS BLOCKED.***

Fig. C

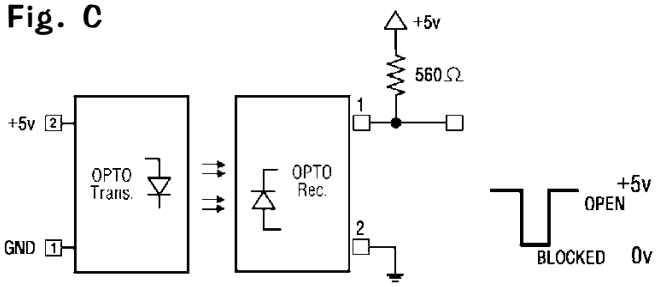

Trough Dual OPTO Boards Alignment / Test for LED1

When a working **OPTO** is installed and connected in a game, the transmitter should light *(LED1 lower & LED2 upper)* when the power is switched on. With the playfield in **Service Position #1** *(playfield lifted up in the half-way position resting on the Prop Rod or edge slide support brackets)* and the game on, the LED lights should show up as a **BRIGHT RED RINGS** through the back of the Receiver Board around the **Receivers LED1 & LED2** (See **Fig. 1**). Testing only **LED1:** With the game in ***Switch Test Mode***, lifting the Trough Plunger with a fingertip should block the **BEAM** and cause the Switch Position to trigger (See **Fig. 2**). View **Fig. 2a** & **2b** *(on the next page)* for a sectional view of the Light Path (note alignment) and what happens as a ball breaks the light beam.

Fig. 1

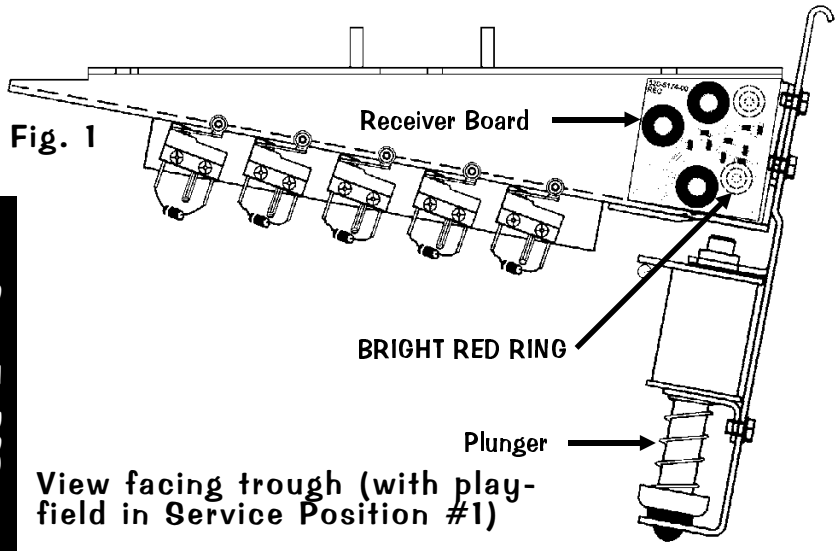

View facing trough (with playfield in Service Position #1)

Fig. 2

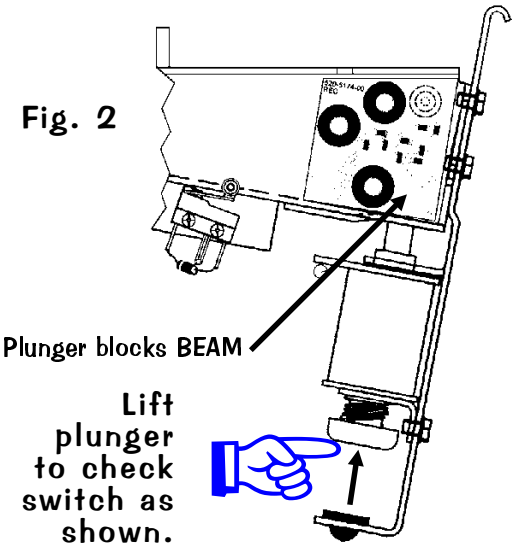

Sectional view from right (Fig. 2a & 2b)

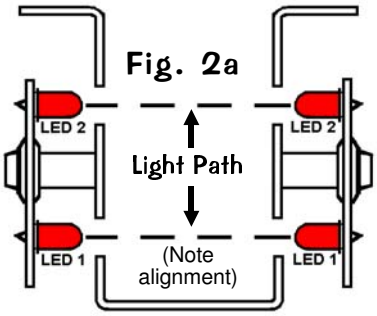

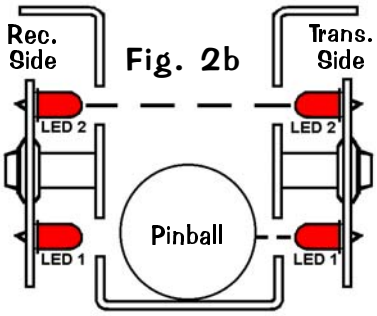

Trough Dual OPTO Boards Alignment / Test for LED2

When a working **OPTO** is installed and connected in a game, the transmitter should light (LED1 lower & LED2 upper) when the power is switched on. With the playfield in **Service Position #1** *(playfield lifted up in the half-way position resting on the Prop Rod or edge slide support brackets)* and the game on, the LED lights should show up as a **BRIGHT RED RINGS** through the back of the Receiver Board around the **Receivers LED1 & LED2** (See **Fig. 1, previous page**). Testing only **LED2:** *TO PERFORM THIS TEST, A PINBALL MUST BE IN THE BALL TROUGH.* With the game in ***Switch Test Mode***, lifting the Trough Plunger with a finger tip should block the **BEAM** on LED2 and cause the Switch Position to trigger (See **Fig. 3**). View **Fig. 3a** & **3b** for a sectional view of the Light Path (note alignment) and what happens as a "double-stacked" ball scenario breaks the light beam.

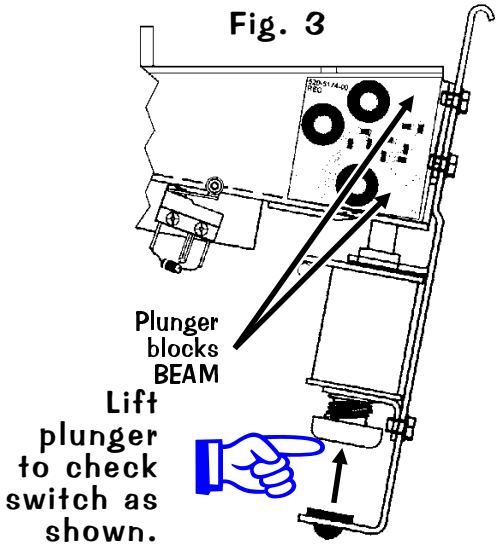

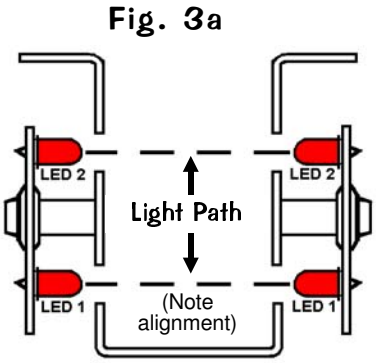

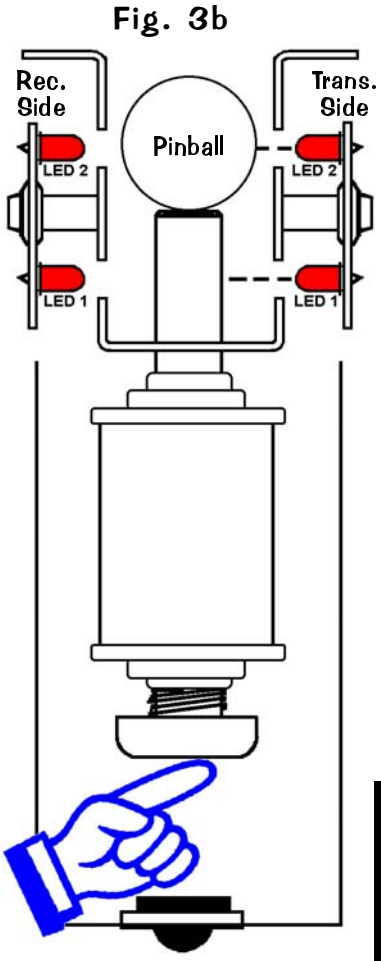

I M P O R T A N T

If replacement of ***LED*** *is required, insure that is* ***mounted correctly before and after soldering*** *(See* ***Fig. 4a*** / ***4b****).*

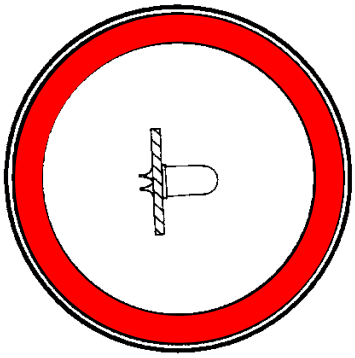

Fig. 4a
Correct Position

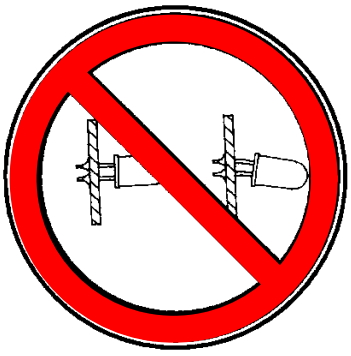

Fig. 4b
Incorrect Position

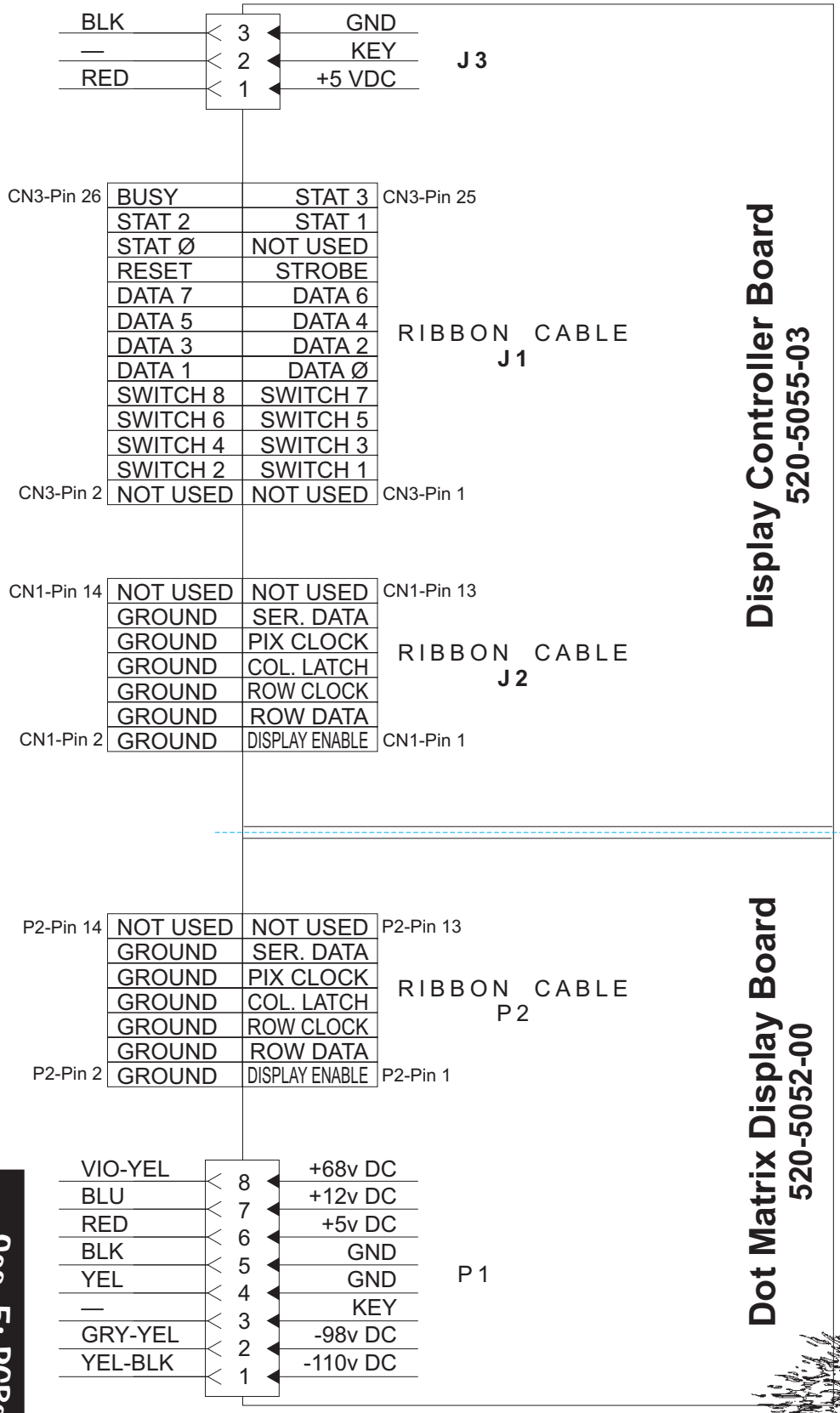

Dot Matrix Display Explained

The display utilizes a Micro-Processor Control Board mounted in piggyback fashion to the Dot Matrix Display (128 X 32) Driver Board. The purpose behind this board is to provide more information to the operator as well as displaying graphics to the player.

The board is controlled by a 6809E Micro processor and its personality ROM (Unique to the Game). It receives Data, Reset & Clock Information from the CPU/Sound Board via the ribbon cable and sends back multiple Status and Busy Signals to the CPU. This is to insure synchronized communication between the CPU and the Display Controller Board. The Drivers for the rows and columns are provided on 5 surface mounted integrated circuits on the Dot Matrix Display Driver Board.

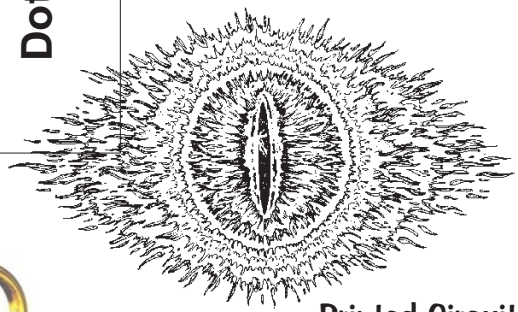

Display Power Supply Board Schematic

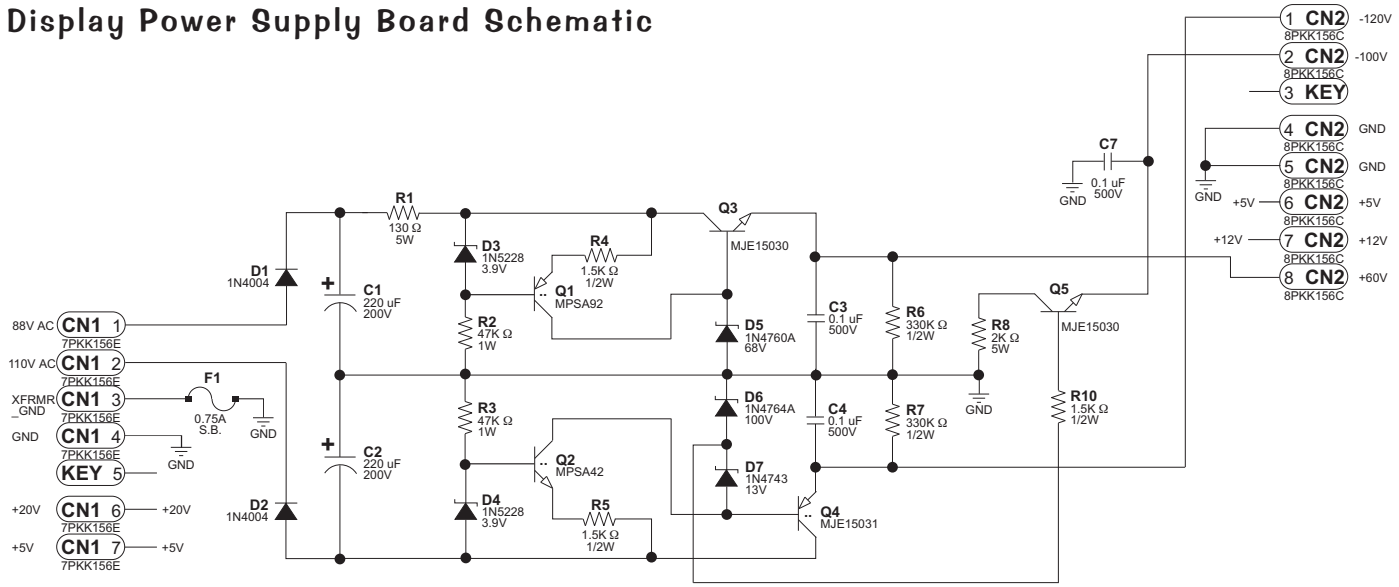

Display Power Supply Board Component Layout & Parts

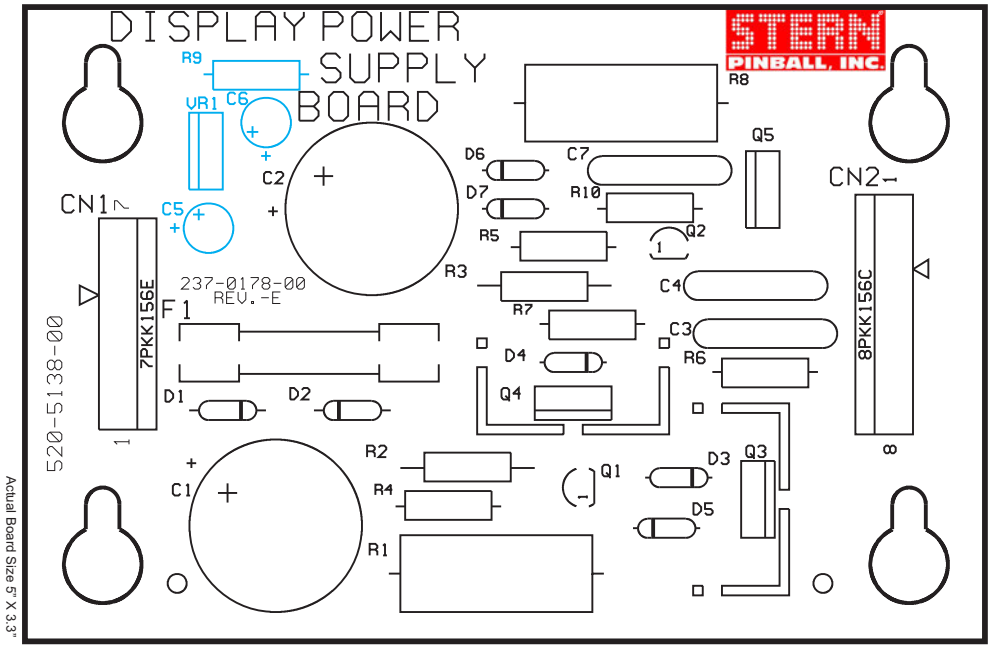

ITEM	QTY	PART NUMBER	REF-DESIGNATOR	DESCRIPTION (NS = Not Stuffed)
—	**1**	**520-5138-00**	**Display Power Supply Board**	**Complete PCB Assembly**
01	2	125-5044-00	C1, C2	220uF, 200v, Radial Lytic Cap.
02	3	125-5035-00	C3, C4, C7	0.1uF, 500v, Ceramic Disk Cap.
03	0	125-5003-00	(C5, C6: NS)	22uF, 35v, Rad Lytic Cap
04	1	045-5015-07	CN1	7PKK156E (PIN5=KEY)
05	1	045-5015-08	CN2	8PKK156 (PIN3=KEY)
06	2	112-5003-00	D1, D2	1N4004, Diode
07	2	112-0053-00	D3, D4	1N5228, 3.9v, Diode
08	1	112-0062-00	D5	1N4760A, 68v, Diode
09	1	112-0049-00A	D6	1N4764A, 100v, Diode
10	1	112-0061-00	D7	1N4743, 13v, Diode
11	1	200-5000-17	F1	3/4A (0.75A) S.B. Fuse
12	2	205-0004-00	F1	Fuse Clip
13	1	110-0100-00	Q1	MPSA92, Transistor
14	1	110-0082-00	Q2	MPSA42, Transistor
15	2	110-0101-00	Q3, Q5	MJE15030, Transistor
16	2	535-5000-11	Q3, Q4	Heatsinks - AAVID #563002
17	2	240-5008-00	Q3, Q4	#6-32 KEPS Nut
18	2	237-5501-00	Q3, Q4	#6-32 X 3/8" PPH Screw
19	1	110-0103-00	Q4	MJE15031, Transistor
20	1	121-5061-00	R1	130 Ω 5W Res.
21	2	121-5060-00	R2, R3	47K Ω 1W Res.
22	3	121-5038-00	R4, R5, R10	1.5K Ω 1/2W Res. (R9: NS)
23	2	121-5059-00	R6, R7	330K Ω 1/2W Res.
24	1	121-5062-00	R8	2K Ω 5W Res.
25	0	124-5003-00	(VR1: NS)	7812CT

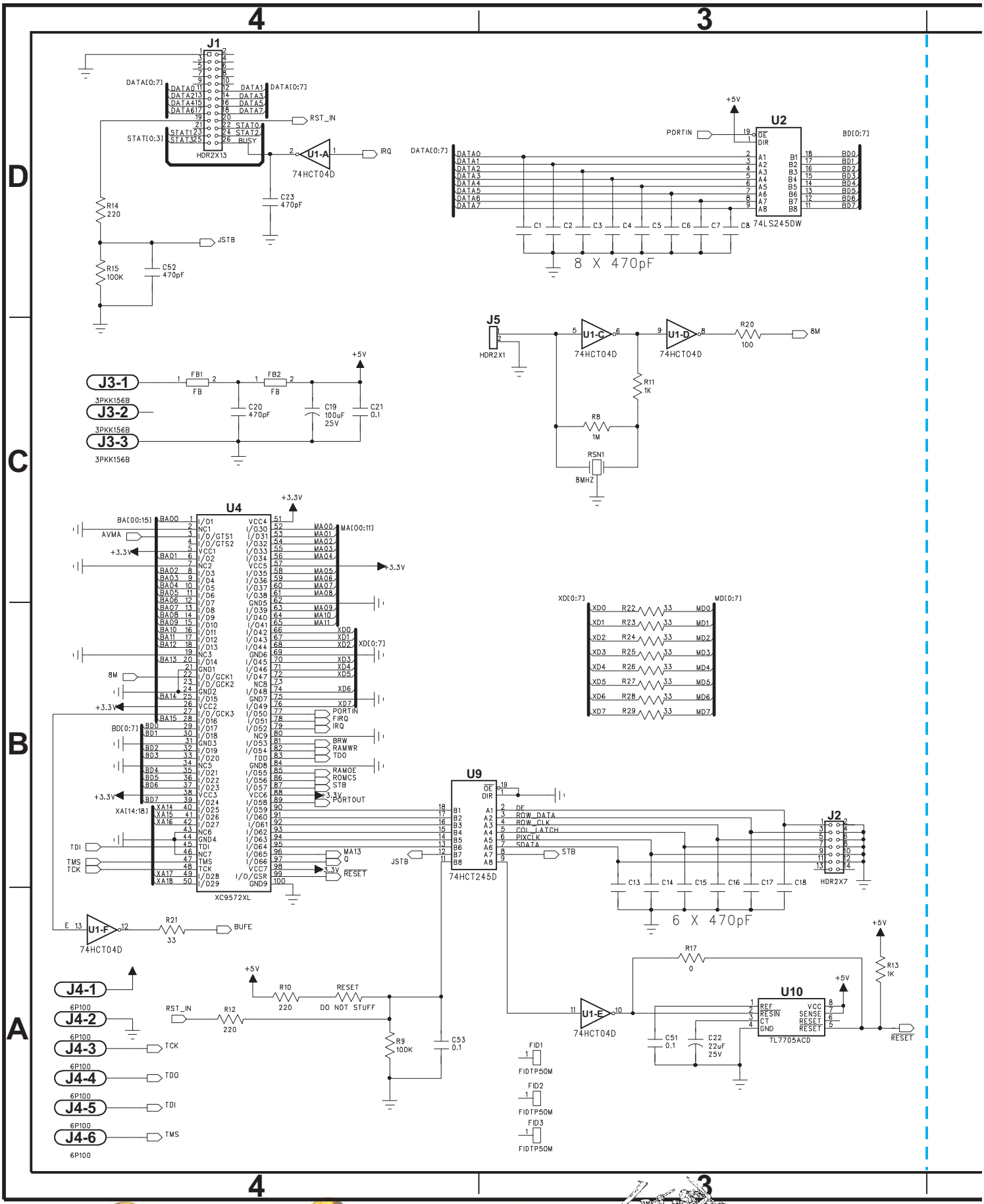
J1
HDR2X13
DATA[0:7]
STAT[0:3]
RST_IN
IRQ
U1-A
74HCT04D
C23
470pF
R14
220
R15
100K
C52
470pF
JSTB
U2
74LS245DW
PORTIN
BD[0:7]
8 X 470pF
J5
HDR2X1
U1-C
U1-D
R20
100
8M
R11
1K
R8
1M
RSN1
8MHZ
J3-1
J3-2
J3-3
3PKK156B
FB1
FB2
FB
C20
470pF
C19
100uF
25V
C21
0.1
U4
XC9572XL
BA[00:15]
AVMA
MA[00:11]
XD[0:7]
XA[14:18]
TDI
TMS
TCK
PORTIN
FIRQ
IRQ
BRW
RAMWR
TDO
RAMOE
ROMCS
STB
PORTOUT
MA13
Q
RESET
U9
74HCT245D
XD[0:7]
MD[0:7]
R22
R23
R24
R25
R26
R27
R28
R29
33
J2
HDR2X7
DF
ROW_DATA
ROW_CLK
COL_LATCH
PIXCLK
SDATA
STB
6 X 470pF
U1-F
R21
33
BUFE
J4-1
J4-2
J4-3
J4-4
J4-5
J4-6
6P100
TCK
TDO
TDI
TMS
R10
220
RESET
DO NOT STUFF
R12
220
R9
100K
C53
0.1
U1-E
R17
0
U10
TL7705ACD
C51
0.1
C22
22uF
25V
R13
1K
FID1
FID2
FID3
FIDTP50M

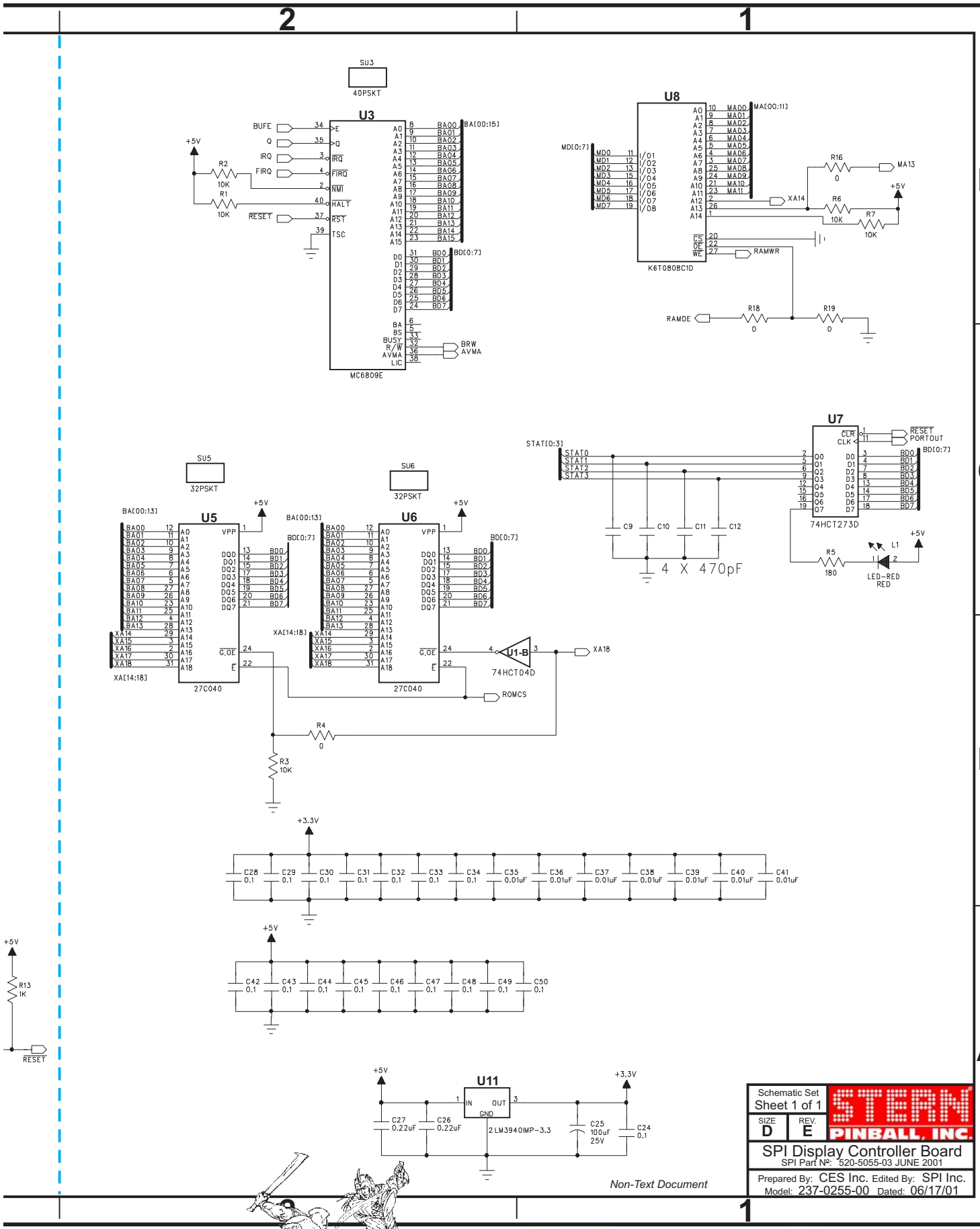
SU3
40PSKT
U3
MC6809E
BUFE
Q
IRQ
FIRQ
RESET
+5V
R2
10K
R1
10K
BA[00:15]
BD[0:7]
BRW
AVMA
U8
K6T0808C1D
MD[0:7]
MA[00:11]
XA14
RAMWR
RAMOE
R16
0
MA13
R6
10K
R7
10K
R18
0
R19
0
U7
74HCT273D
STAT[0:3]
RESET
PORTOUT
C9
C10
C11
C12
4 X 470pF
R5
180
L1
LED-RED
RED
SU5
32PSKT
U5
27C040
SU6
32PSKT
U6
27C040
BA[00:13]
XA[14:18]
U1-B
74HCT04D
XA18
ROMCS
R4
0
R3
10K
+3.3V
C28 0.1
C29 0.1
C30 0.1
C31 0.1
C32 0.1
C33 0.1
C34 0.1
C35 0.01uF
C36 0.01uF
C37 0.01uF
C38 0.01uF
C39 0.01uF
C40 0.01uF
C41 0.01uF
C42 0.1
C43 0.1
C44 0.1
C45 0.1
C46 0.1
C47 0.1
C48 0.1
C49 0.1
C50 0.1
R13
1K
RESET
U11
LM3940IMP-3.3
C27 0.22uF
C26 0.22uF
C25 100uF 25V
C24 0.1
Non-Text Document
Schematic Set
Sheet 1 of 1
SIZE D
REV. E
STERN PINBALL, INC.
SPI Display Controller Board
SPI Part №: 520-5055-03 JUNE 2001
Prepared By: CES Inc. Edited By: SPI Inc.
Model: 237-0255-00 Dated: 06/17/01

Display Controller Board Component Layout & Parts

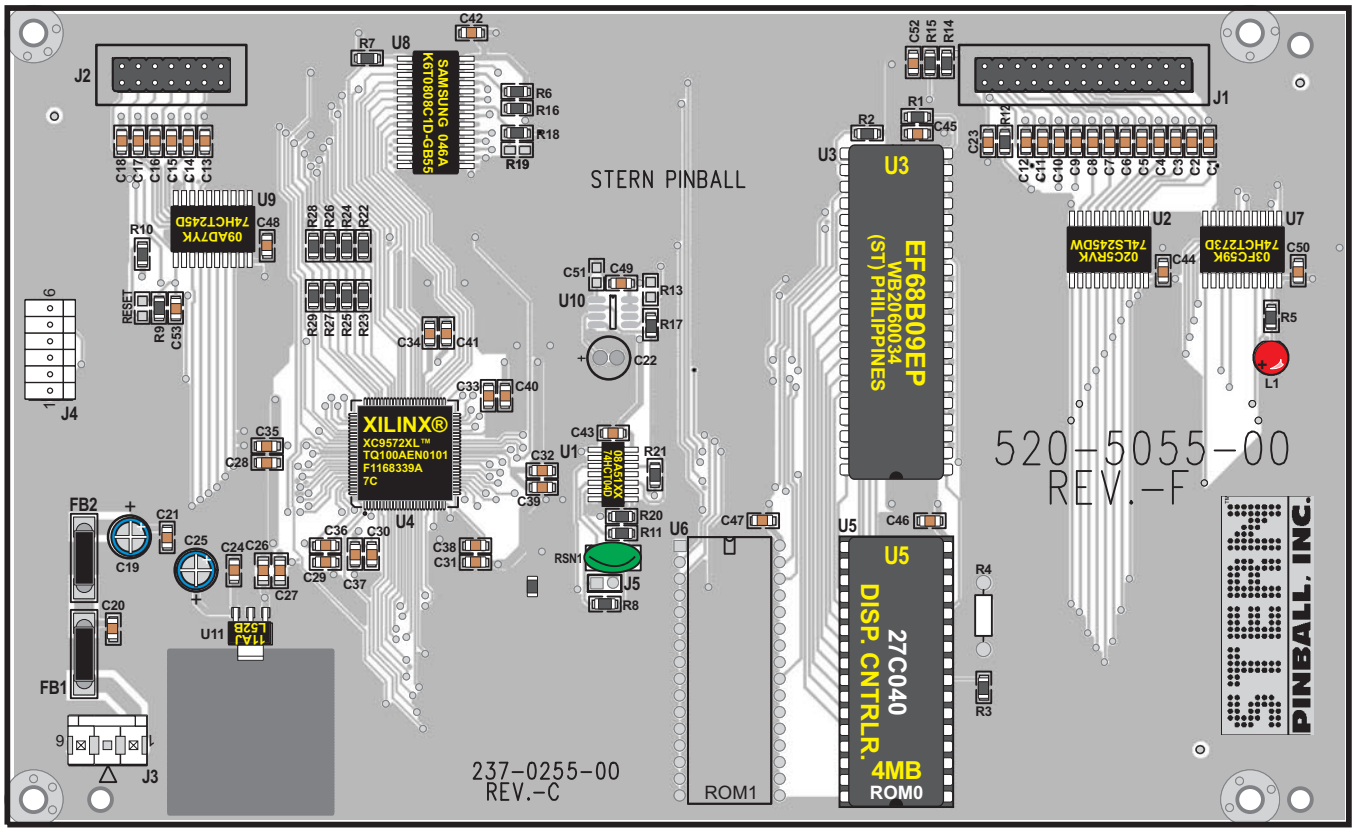

Actual Board Size 20.5cm X 12.5cm

ITEM	QTY	PART NUMBER	REF-DESIGNATOR	DESCRIPTION (NS = Not Stuffed)
—	**1**	**520-5055-03**	**Display Controller Bd. (FCC FEB98) Rev. E June 2001**	**Complete PCB Assembly**
01	1	045-5015-26	J1	13-Pin, Dual row .1" Hdr. Conn HDR2X13
02	1	045-5015-02	J2	7-Pin, Dual Row .1" Hdr. Conn HDR2X7
03	1	045-5015-03	J3	3-Pin, PKK156B Connector
04	1		J4	6-Pin (6P100)
05	7		C35-C39, C40, C41	SMT 0.01uF, 50v Cap. 103-0805-X7R
06	20		C21, C24, C28-C32, C33, C34, C42, C43, C44, C45, C46 C47, C48, C49, C50, C53 (C51: NS)	SMT 0.1uF, 50v Cap. 104-0805
07	2		C26, C27	SMT 0.22uF, 50v Cap. 224-1206-Z5U
08	21		C1-C12, C13-C18, C20, C23, C52	SMT 470pF, 50v Cap. 471-0805
09	2		C19, C25	100uF, 25v TCap.
10	**1**	**165-5099-00**	**L1**	**LED T1-3/4 DIFFUSER RED**
11	4		R16-R18 (R19: NS)	0 Ω 1/10W Resistor 0805
12	1	n/a	RESET	*DO NOT STUFF*
13	2		R11, R13	SMT 1K Ω 1/10W Resistor 0805
14	1		R8	SMT 1M Ω 1/10W Resistor 0805
15	5		R1, R2, R3, R7 (R6: NS)	SMT 10K Ω 1/10W Resistor 0805
16	9		R21, R22-R29	SMT 33 Ω 1/10W Resistor 0805
17	1		R20	SMT 100 Ω 1/10W Resistor 0805
18	2		R9, R15	SMT 100K Ω 1/10W Resistor 0805
19	1		R5	SMT 180 Ω 1/10W Resistor 0805
20	3		R10, R12, R14	SMT 220 Ω 1/10W Resistor 0805
21	1		U1	74HCT04D (74LS04)
22	1		U2	74LS245DW
23	1	100-0189-01	U3 *(40-Pin Socket, 077-X)*	MC6809E
24	1	100-5044-00	U4	XC9572XL, Int. Xilinx®
25	2 (See Pg. **DR.** ❶ Table)		U5 (ROM0) (U6: NS) *(32-Pin, IC Dip Socket, 077-5217-00)*	4MB ROM 27C040 (M27C401-100)
26	1		U7	74HCT273D
27	1	100-5045-00	U8	K6T0808C1D-GB55, Int. Samsung 046A
28	1		U9	74HCT245D
29	1		U11	LM3940IMP-3.3
30	1		RSN1	8MHZRSN (8Mhz) Crystal
31	2	n/a	FB1, FB2	Ferrite Bead, FB0370
32	0		FID1-3	FIDTP50M

If a part is required where a part number is not provided, call Technical Support (see back of cover).

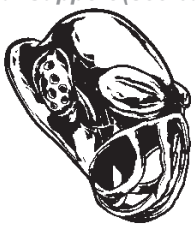

5v Supply:
An AC voltage of approximately 9v comes into the board at [**J17-**(1-4)] this AC voltage is then *full-wave rectified* by bridge **BRDG 21** and filtered by Capacitor **C203**. The resulting voltage is 11v DC which is inserted into a linear voltage regulator for the output of 5v DC. This 5v regulated voltage can be adjusted by potentiometer **R116** the voltage should be set to 5.00v. Besides powering the **I/O Board** the regulated 5 volts supplies power to the **CPU** / **Sound Board**, **Gas Plasma (Dot Matrix) Display** and **Plasma (Display) Controller Board**. Power for these devices comes off the **I/O Board** on [**J16**-(4-8)].

+5v, +20v, +50v, +18v, & +12v LED Indicators:
These DC voltages are derived on the **I/O Board** by rectification and filtering. Each has a **LED** indicating that power is being supplied to each of these voltage sources. The **-12v** supply comes from the same transformer winding as the **+12v** thus it does not have a **LED** indicator.

LED	SUPPLY VOLTAGE
L2	+5
L200	+20v
L201	+50v
L202	+18v
L203	+12v

*** **Note** that the +50v & +20v power sources are turned off by the Interlock Switches when the Coin Door is OPEN.*

Reset Circuitry:
The I/O will reset in three (3) cases:

1. The CPU is in reset. The CPU's reset signal is fed into the **I/O** through connector **J1** and forces the **I/O** into reset.
2. The 5v supply has fallen below 4.75v.
3. The watchdog is not being fed by the scanning of the light matrix. More specifically **Pin-19** of **U6** must be toggling once every ***50ms*** to prevent the watchdog from resetting. The scanning of the light matrix is controlled by the CPU through **J1**.

LED L204 shows the reset state of the **I/O Board**. If this **LED** is not lit either the 5v DC is below 4.75v or the **CPU/Sound Board** is holding the **I/O** in reset. If the **LED** is flashing this means that the watchdog is not being feed by the **CPU/Sound Board** and the **I/O** is oscillating into and out of reset. If the **LED** is continuously on the board is out of reset and communication from the CPU to the lamp matrix is confirmed. ***Testpoint Blanking*** is the actual reset signal on the **I/O Board**. A low voltage indicates that it is in reset this will turn off all Solenoid *(Coil)* Drivers, Flash Lamps, Lamp Matrix Drivers, Auxiliary Outputs and Flipper Outputs. A high voltage indicates that it is out of reset and normal operation can take place.

Address Decoding:
All Address decoding is done by two **74LS138's (U204 & U205)** (3 of 8 decoder). Both of these must be in operation for the **I/O Board** to function properly.

Solenoid (Coil) Drivers & Flash Lamps:
J8 & **J9** are high side drivers for driving solenoids and other heavy loads. Each connector has its own buffer driving 8 drivers. **J8** & **J9** consist of **MOSFET Drivers 20N10L** which can easily & safely be tested by clipping one end of a clip-lead to test point **FET TPL1** and then the other to the corresponding gate resistor **R1-R16** *(see Note 1).* This will apply 3.4v to the gate of the **MOSFET Transistor** thus switching it on. **J7** & **J6** each are a bank of 8 low side driver for driving lamps or other lower current solenoids *(coils).* They use a Bipolar Power Transistor **TIP122** which can also be tested by using **TEST POINT TIP TPL3** and the corresponding resistors **R17-R32*** *(see Note 1).*

Note 1 • *Clip on the resistor side with the white stripe.* •• *R1 controls Q1, R2 controls Q2, et cetera...*

Auxiliary In & Out:
J2-8 CMOS Outputs sometimes used for a printer interface.
J3-8 CMOS Inputs general purpose inputs.

Lamp Matrix:
J12 has 10 low side drivers for the lamp strobes which consist of **19N06L MOSFETS**. Only one lamp strobe should be low at any time. Again the scanning of the lamp strobes keeps the **I/O** from resetting. **J13** has 8 high side drivers with each having a status indicator. All the status indicators are logically 'OR'ed together and fed back to the **CPU/Sound Board**. The status can identify open loads *(for example open lamp filaments or intermittent connections)* and short circuits. These drivers are also short-circuit protected.

General Illumination (G.I.) Lights:
J15 has 6v AC switched on & off by a relay on the **I/O Board**. The relay is controlled by **Q200** which supplies power to the 24v coil winding to activate the relay. There are 4 taps on **J15** each fused at 5A for this 6v AC source.

I/O Power Driver Board Schematic (Sheet 1 of 5)

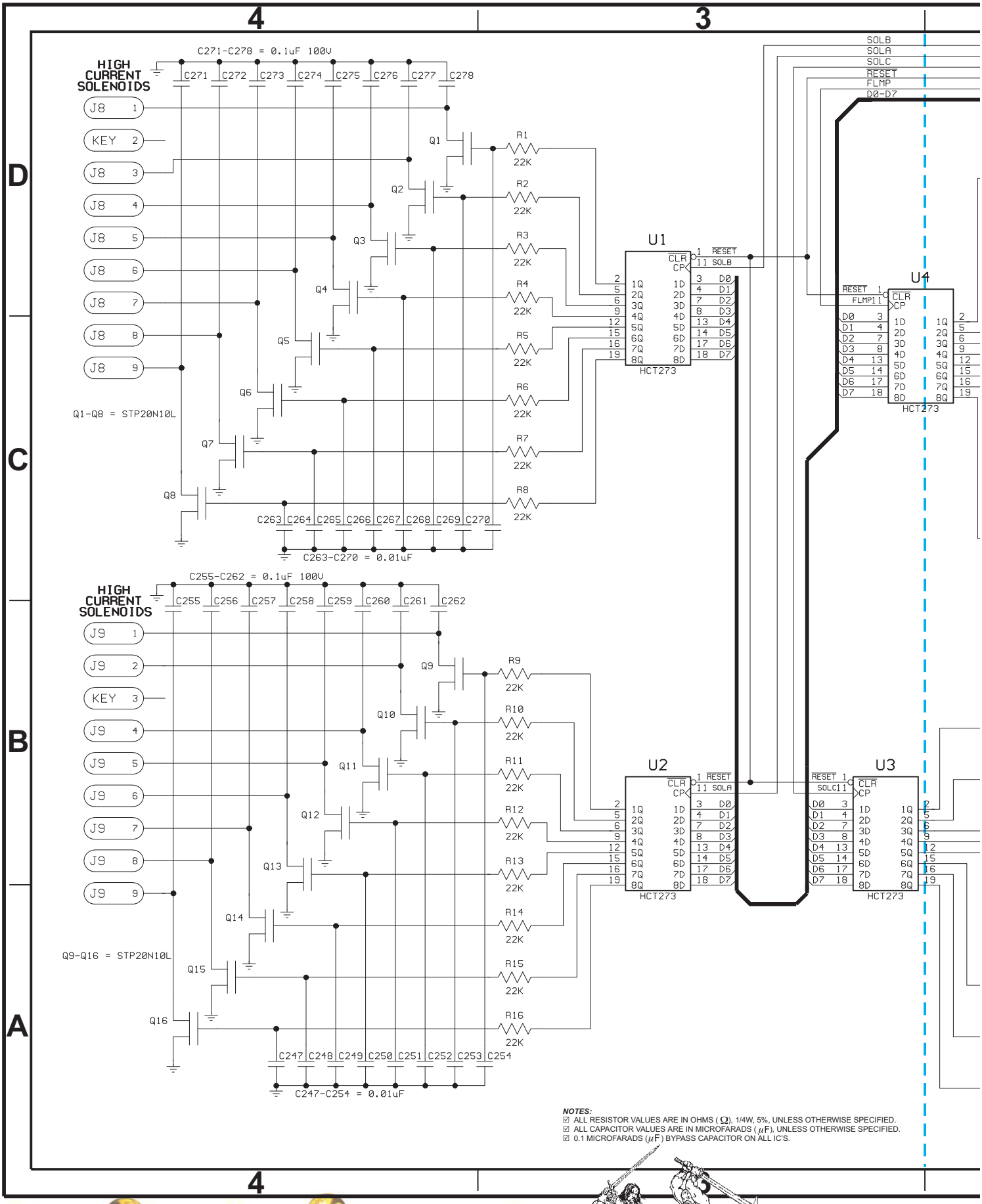

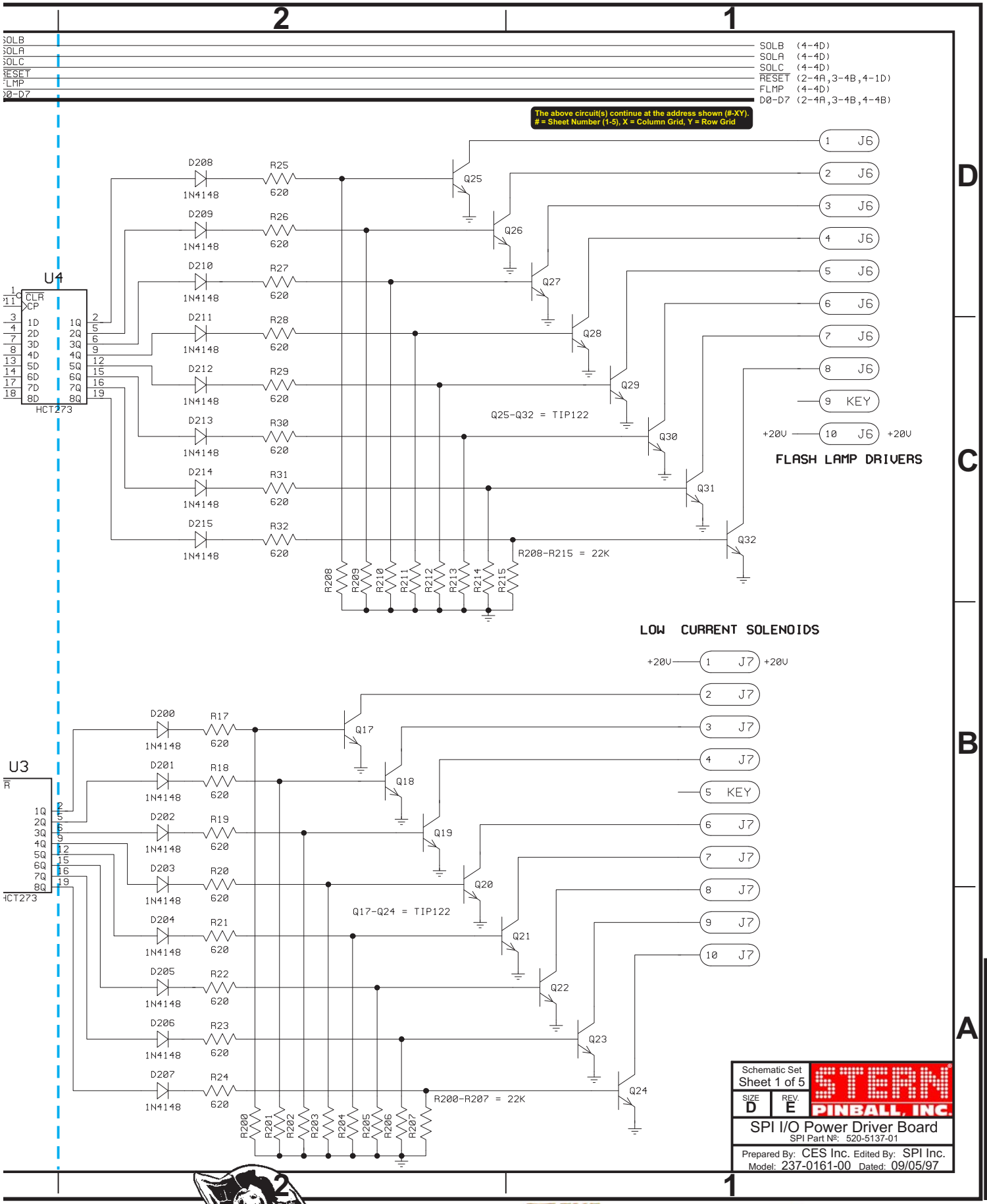
SOLB (4-4D)
SOLA (4-4D)
SOLC (4-4D)
RESET (2-4A,3-4B,4-1D)
FLMP (4-4D)
D0-D7 (2-4A,3-4B,4-4B)
The above circuit(s) continue at the address shown (#-XY).
= Sheet Number (1-5), X = Column Grid, Y = Row Grid
U4
HCT273
Q25-Q32 = TIP122
R208-R215 = 22K
FLASH LAMP DRIVERS
+20V
LOW CURRENT SOLENOIDS
U3
Q17-Q24 = TIP122
R200-R207 = 22K
Schematic Set
Sheet 1 of 5
SIZE D
REV. E
STERN PINBALL, INC.
SPI I/O Power Driver Board
SPI Part №: 520-5137-01
Prepared By: CES Inc. Edited By: SPI Inc.
Model: 237-0161-00 Dated: 09/05/97

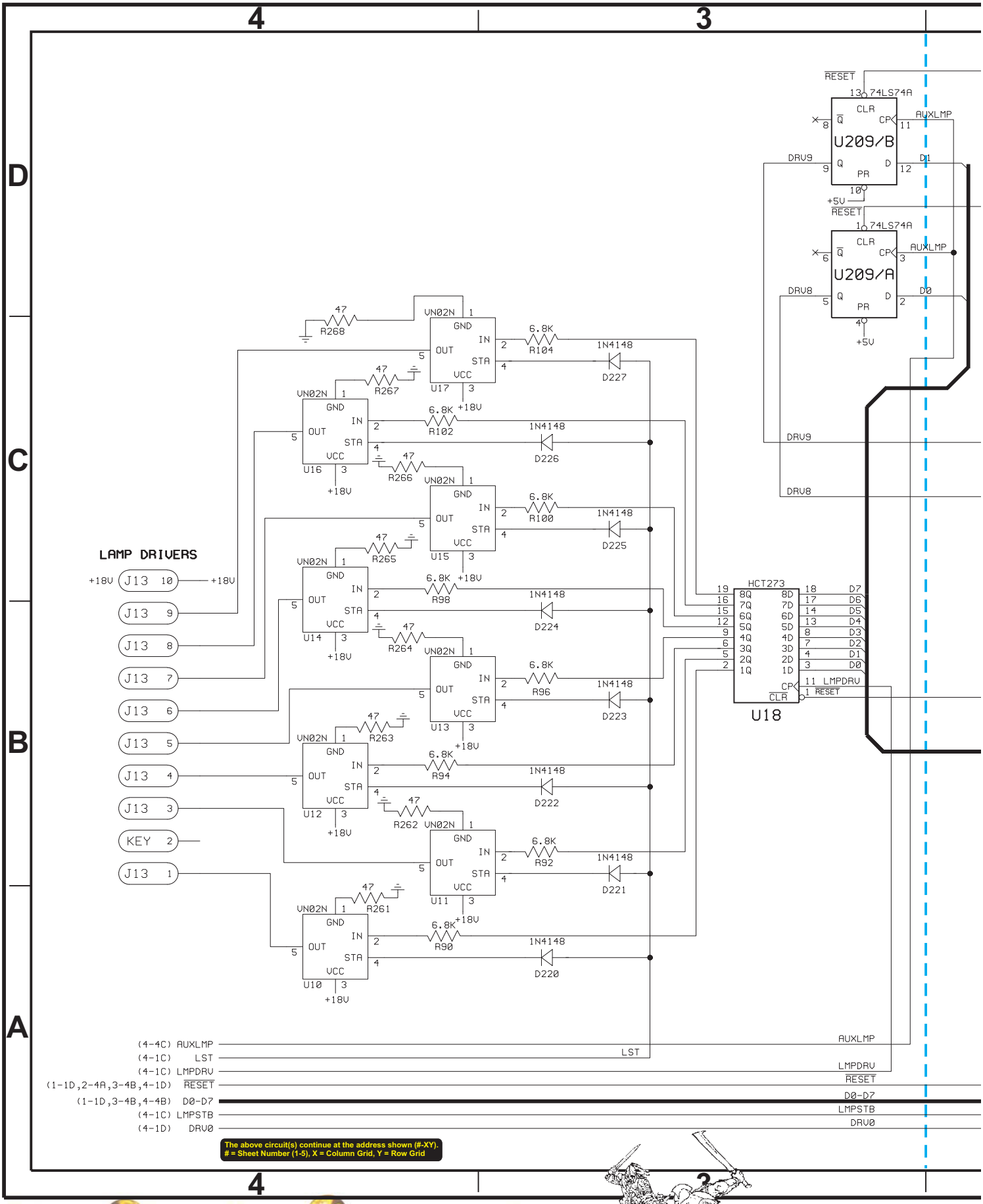
4
3
D
C
B
A
RESET
74LS74A
CLR
Q
CP
AUXLMP
U209/B
DRV9
D
D1
PR
+5V
RESET
74LS74A
CLR
Q
CP
AUXLMP
U209/A
DRV8
D
D0
PR
+5V
DRV9
DRV8
LAMP DRIVERS
+18V
J13 10
J13 9
J13 8
J13 7
J13 6
J13 5
J13 4
J13 3
KEY 2
J13 1
UN02N
GND
IN
OUT
STA
VCC
U17
U16
U15
U14
U13
U12
U11
U10
R268
R267
R266
R265
R264
R263
R262
R261
6.8K
R104
R102
R100
R98
R96
R94
R92
R90
1N4148
D227
D226
D225
D224
D223
D222
D221
D220
HCT273
U18
LMPDRV
RESET
D7
D6
D5
D4
D3
D2
D1
D0
(4-4C) AUXLMP
(4-1C) LST
(4-1C) LMPDRV
(1-1D,2-4A,3-4B,4-1D) RESET
(1-1D,3-4B,4-4B) D0-D7
(4-1C) LMPSTB
(4-1D) DRV0
AUXLMP
LST
LMPDRV
RESET
D0-D7
LMPSTB
DRV0
The above circuit(s) continue at the address shown (#-XY).
= Sheet Number (1-5), X = Column Grid, Y = Row Grid
4
2

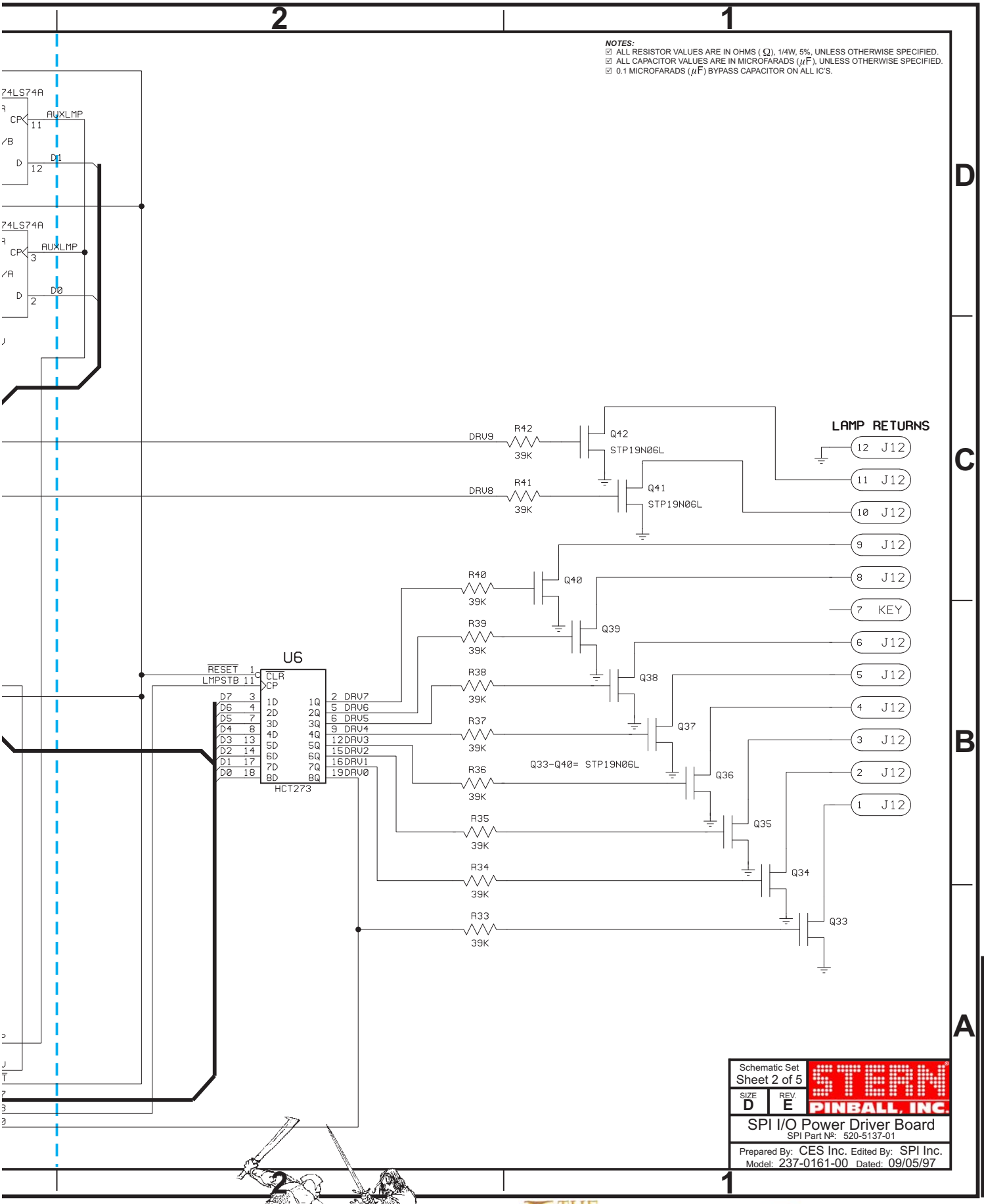
NOTES:
☑ ALL RESISTOR VALUES ARE IN OHMS (Ω), 1/4W, 5%, UNLESS OTHERWISE SPECIFIED.
☑ ALL CAPACITOR VALUES ARE IN MICROFARADS (μF), UNLESS OTHERWISE SPECIFIED.
☑ 0.1 MICROFARADS (μF) BYPASS CAPACITOR ON ALL IC'S.
74LS74A
AUXLMP
D1
D0
LAMP RETURNS
DRV9
DRV8
R42
R41
39K
Q42
Q41
STP19N06L
Q40
Q39
Q38
Q37
Q36
Q35
Q34
Q33
Q33-Q40= STP19N06L
U6
RESET
LMPSTB
CLR
CP
HCT273
DRV7
DRV6
DRV5
DRV4
DRV3
DRV2
DRV1
DRV0
J12
KEY
Schematic Set
Sheet 2 of 5
SIZE D
REV. E
STERN PINBALL, INC.
SPI I/O Power Driver Board
SPI Part №: 520-5137-01
Prepared By: CES Inc. Edited By: SPI Inc.
Model: 237-0161-00 Dated: 09/05/97

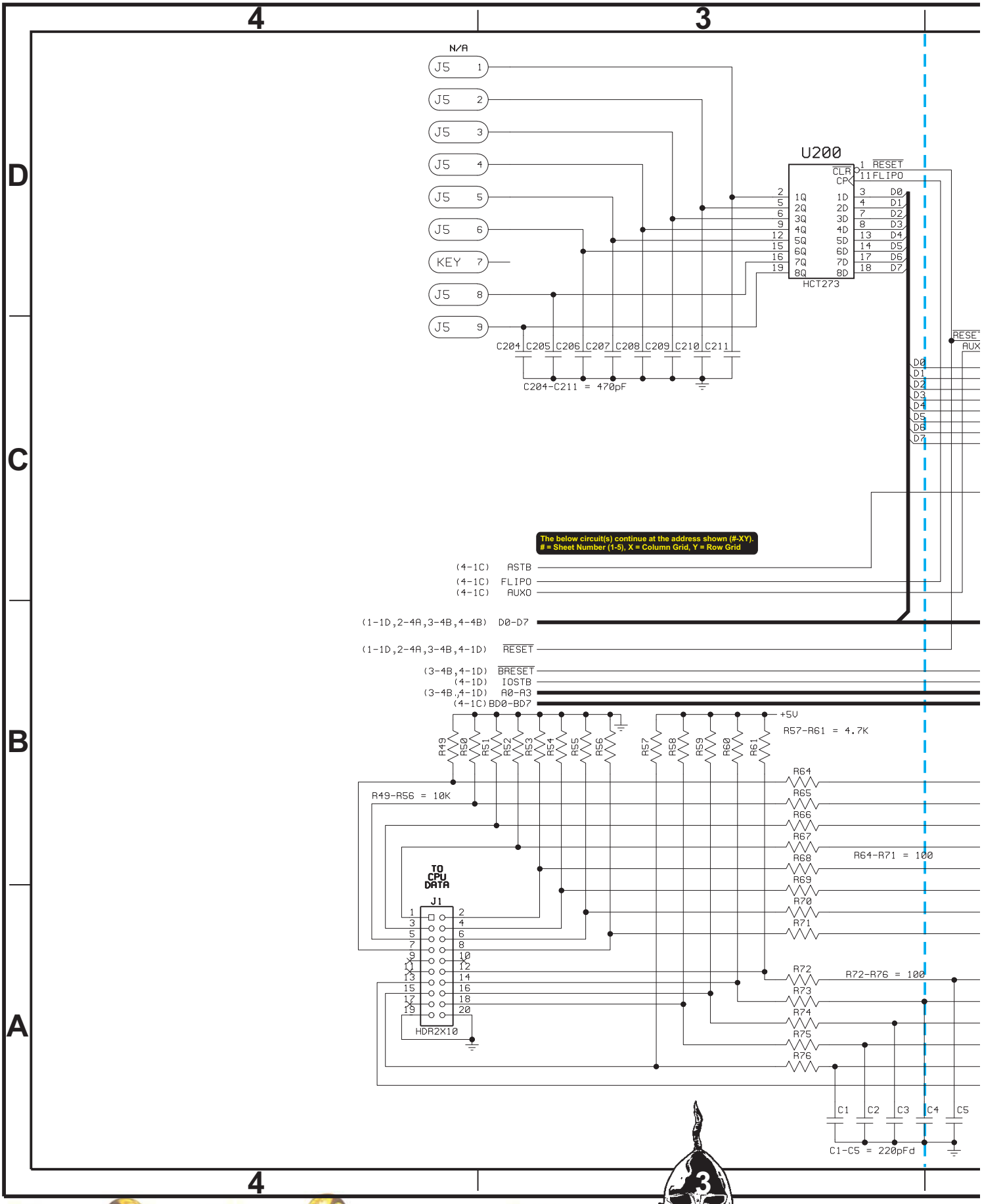
4
3
N/A
J5 1
J5 2
J5 3
J5 4
J5 5
J5 6
KEY 7
J5 8
J5 9
U200
CLR
CP
1 RESET
11 FLIPO
1Q 2Q 3Q 4Q 5Q 6Q 7Q 8Q
1D 2D 3D 4D 5D 6D 7D 8D
D0 D1 D2 D3 D4 D5 D6 D7
HCT273
C204 C205 C206 C207 C208 C209 C210 C211
C204-C211 = 470pF
RESET
AUX
The below circuit(s) continue at the address shown (#-XY).
= Sheet Number (1-5), X = Column Grid, Y = Row Grid
(4-1C) ASTB
(4-1C) FLIPO
(4-1C) AUXO
(1-1D,2-4A,3-4B,4-4B) D0-D7
(1-1D,2-4A,3-4B,4-1D) RESET
(3-4B,4-1D) BRESET
(4-1D) IOSTB
(3-4B,4-1D) A0-A3
(4-1C) BD0-BD7
+5V
R49 R50 R51 R52 R53 R54 R55 R56
R57 R58 R59 R60 R61
R57-R61 = 4.7K
R49-R56 = 10K
R64 R65 R66 R67 R68 R69 R70 R71
R64-R71 = 100
TO CPU DATA
J1
HDR2X10
R72 R73 R74 R75 R76
R72-R76 = 100
C1 C2 C3 C4 C5
C1-C5 = 220pFd
D
C
B
A

NOTES:
- ☑ ALL RESISTOR VALUES ARE IN OHMS (Ω), 1/4W, 5%, UNLESS OTHERWISE SPECIFIED.
- ☑ ALL CAPACITOR VALUES ARE IN MICROFARADS (μF), UNLESS OTHERWISE SPECIFIED.
- ☑ 0.1 MICROFARADS (μF) BYPASS CAPACITOR ON ALL IC'S.

DATE	DESCIRIPTION OF CHANGES / REVISIONS	REQ.	BY.
JAN 2001	Cut trace on solder side at Aux. Out Port J2-PIN1 thru J2-PIN3 & J2-PIN5 thru J2-PIN9; Soldered **Resistor 100Ω** 1/4W 5% (SPI Nº: 121-5007-00). This Modification (highlighted below at J2 with a dotted-line box) was accomplished on boards produced after Jan. 1, 2001. This board is backwards compatible for the White Star™ Board System.	TS	JET

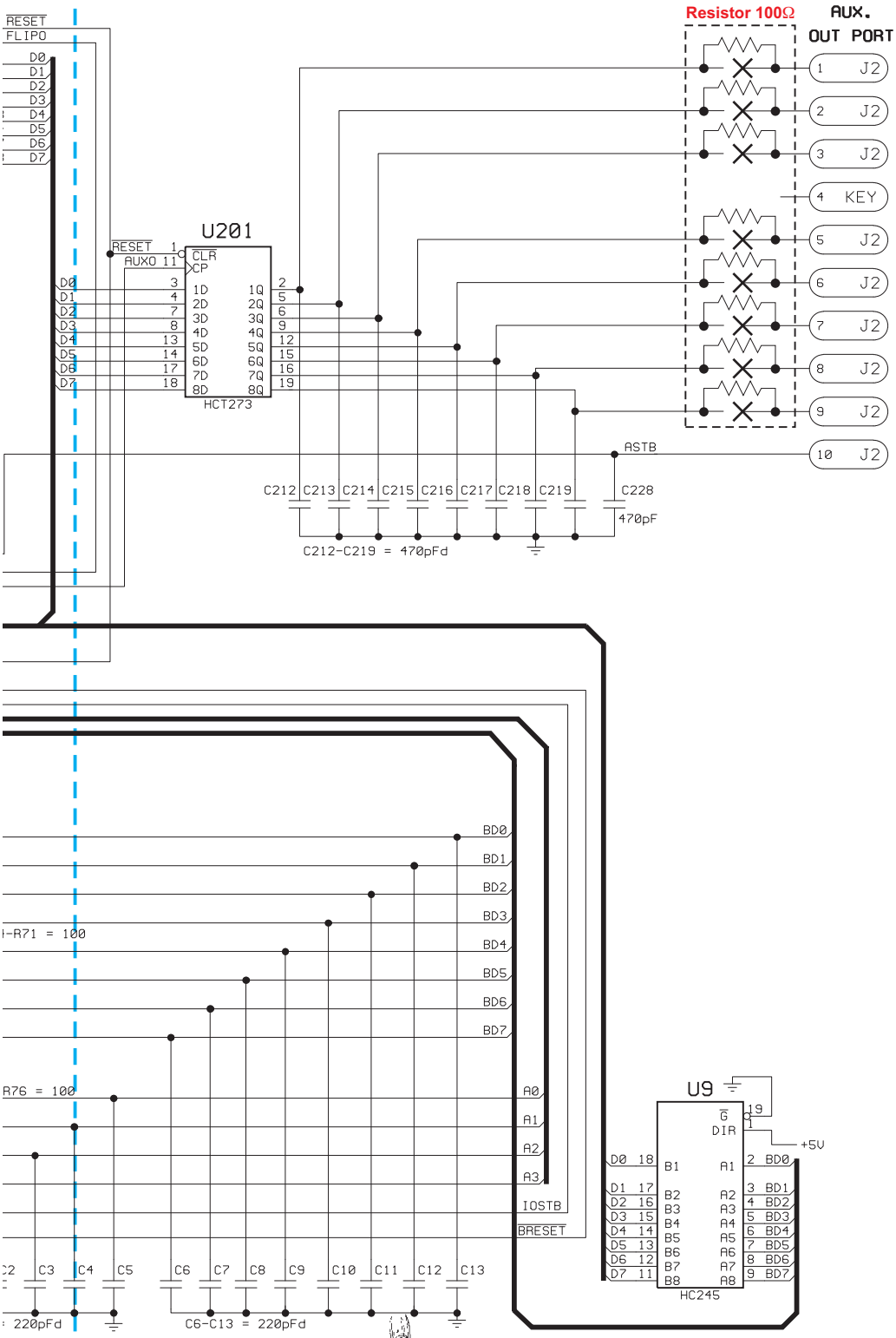

Schematic Set	
Sheet 3 of 5	
SIZE D	REV. E

STERN PINBALL, INC.

SPI I/O Power Driver Board
SPI Part Nº: 520-5137-01

Prepared By: CES Inc. Edited By: SPI Inc.
Model: 237-0161-00 Dated: 09/05/97

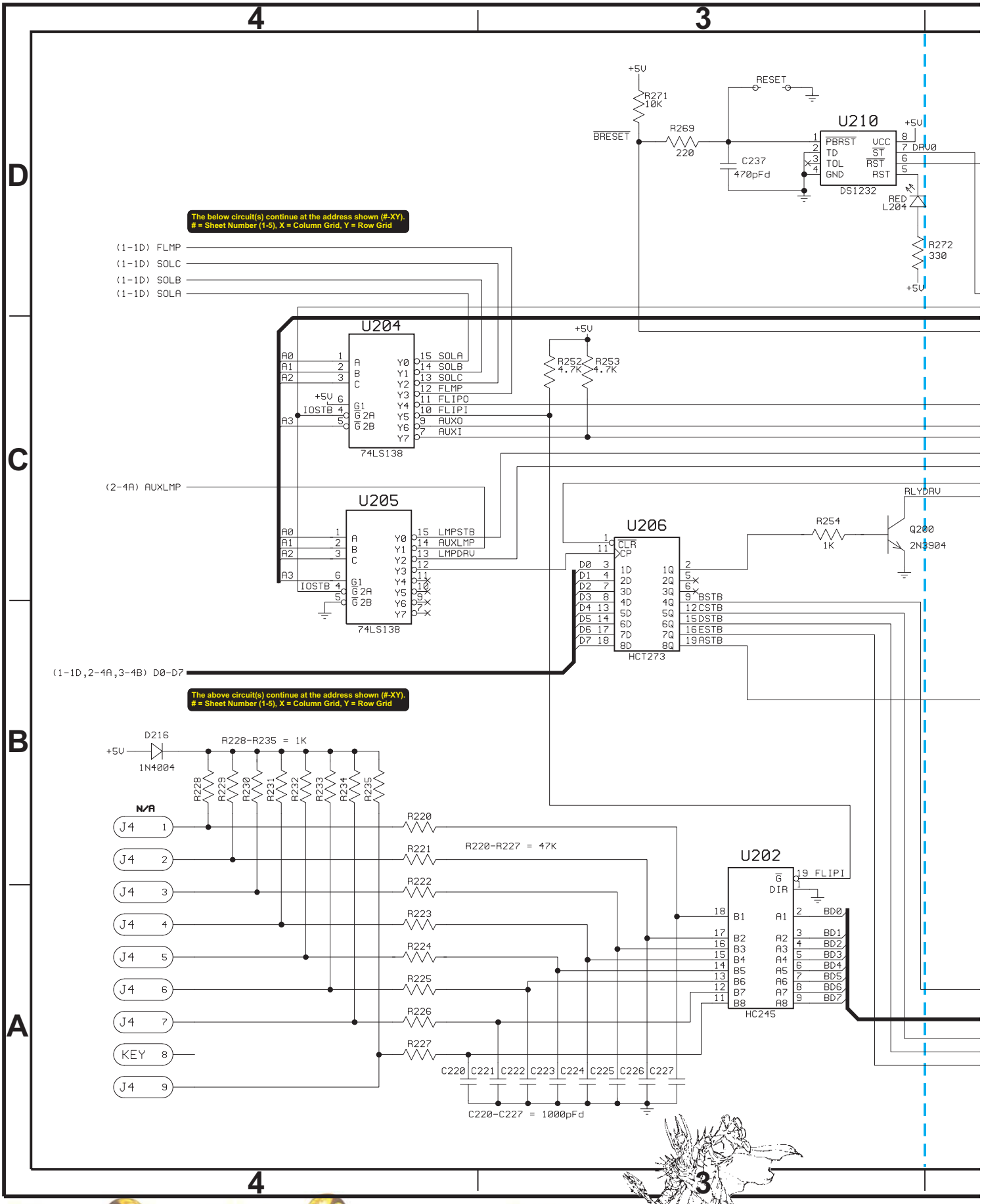
4
3
D
C
B
A
+5V
R271
10K
RESET
BRESET
R269
220
C237
470pFd
U210
PBRST
TD
TOL
GND
VCC
ST
RST
RST
DS1232
DRV0
RED
L204
R272
330
The below circuit(s) continue at the address shown (#-XY).
= Sheet Number (1-5), X = Column Grid, Y = Row Grid
(1-1D) FLMP
(1-1D) SOLC
(1-1D) SOLB
(1-1D) SOLA
U204
A0
A1
A2
A3
IOSTB
G1
G 2A
G 2B
Y0
Y1
Y2
Y3
Y4
Y5
Y6
Y7
SOLA
SOLB
SOLC
FLMP
FLIPO
FLIPI
AUXO
AUXI
74LS138
R252
4.7K
R253
4.7K
(2-4A) AUXLMP
U205
LMPSTB
AUXLMP
LMPDRV
74LS138
U206
CLR
CP
D0
D1
D2
D3
D4
D5
D6
D7
1D
2D
3D
4D
5D
6D
7D
8D
1Q
2Q
3Q
4Q
5Q
6Q
7Q
8Q
BSTB
CSTB
DSTB
ESTB
ASTB
HCT273
RLYDRV
R254
1K
Q200
2N3904
(1-1D,2-4A,3-4B) D0-D7
The above circuit(s) continue at the address shown (#-XY).
= Sheet Number (1-5), X = Column Grid, Y = Row Grid
D216
1N4004
R228-R235 = 1K
R228
R229
R230
R231
R232
R233
R234
R235
N/A
J4 1
J4 2
J4 3
J4 4
J4 5
J4 6
J4 7
KEY 8
J4 9
R220
R221
R222
R223
R224
R225
R226
R227
R220-R227 = 47K
U202
G
DIR
FLIPI
B1
B2
B3
B4
B5
B6
B7
B8
A1
A2
A3
A4
A5
A6
A7
A8
BD0
BD1
BD2
BD3
BD4
BD5
BD6
BD7
HC245
C220
C221
C222
C223
C224
C225
C226
C227
C220-C227 = 1000pFd

DATE	DESCIRIPTION OF CHANGES / REVISIONS	REQ.	BY.
02-13-95	DELETE "-12V" NET FROM POSITIVE PIN OF C29. ADD "GND" NET TO POSITIVE PIN OF C29. MERGE UNNAMED NET FROM NEGATIVE PIN OF C29 WITH "-12V" NET.	BK	JHS
05-25-99	CUT PIN-3 TO GND ON U210 (4-3D)		

NOTES:
- ☑ ALL RESISTOR VALUES ARE IN OHMS (Ω), 1/4W, 5%, UNLESS OTHERWISE SPECIFIED.
- ☑ ALL CAPACITOR VALUES ARE IN MICROFARADS (μF), UNLESS OTHERWISE SPECIFIED.
- ☑ 0.1 MICROFARADS (μF) BYPASS CAPACITOR ON ALL IC'S.

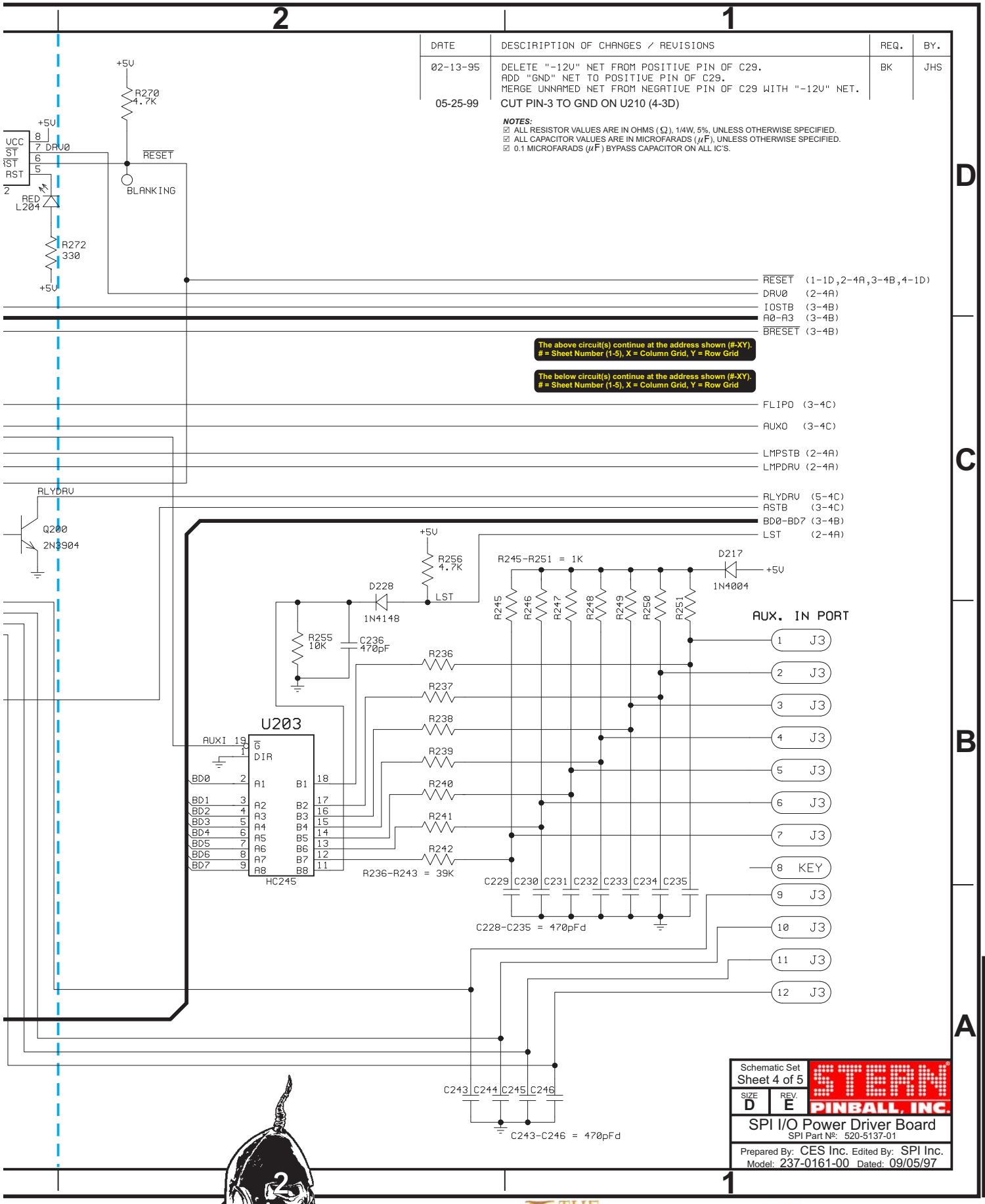

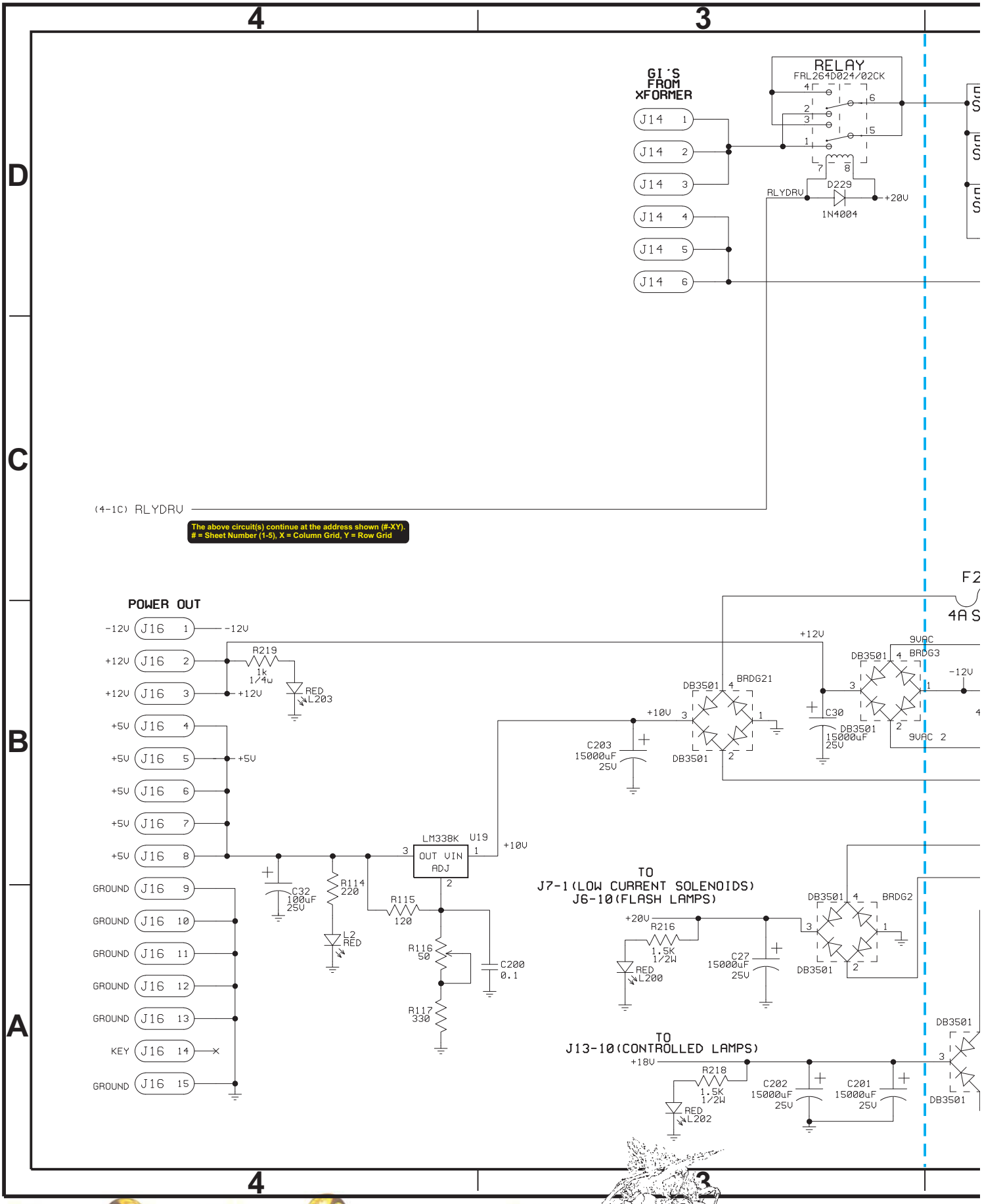
GI'S FROM XFORMER
J14 1
J14 2
J14 3
J14 4
J14 5
J14 6
RELAY
FRL264D024/02CK
D229
1N4004
RLYDRV
+20V
(4-1C) RLYDRV
The above circuit(s) continue at the address shown (#-XY).
= Sheet Number (1-5), X = Column Grid, Y = Row Grid
POWER OUT
J16 1 -12V
J16 2 +12V
J16 3 +12V
J16 4 +5V
J16 5 +5V
J16 6 +5V
J16 7 +5V
J16 8 +5V
J16 9 GROUND
J16 10 GROUND
J16 11 GROUND
J16 12 GROUND
J16 13 GROUND
J16 14 KEY
J16 15 GROUND
R219 1k 1/4W
RED L203
C32 100uF 25V
R114 220
L2 RED
R115 120
R116 50
R117 330
C200 0.1
LM338K U19
OUT VIN ADJ
+10V
C203 15000uF 25V
DB3501 BRDG21
C30 DB3501 15000uF 25V
DB3501 BRDG3
9VAC
TO J7-1(LOW CURRENT SOLENOIDS) J6-10(FLASH LAMPS)
R216 1.5K 1/2W
RED L200
C27 15000uF 25V
DB3501 BRDG2
TO J13-10(CONTROLLED LAMPS)
+18V
R218 1.5K 1/2W
RED L202
C202 15000uF 25V
C201 15000uF 25V
DB3501
F2
4A S

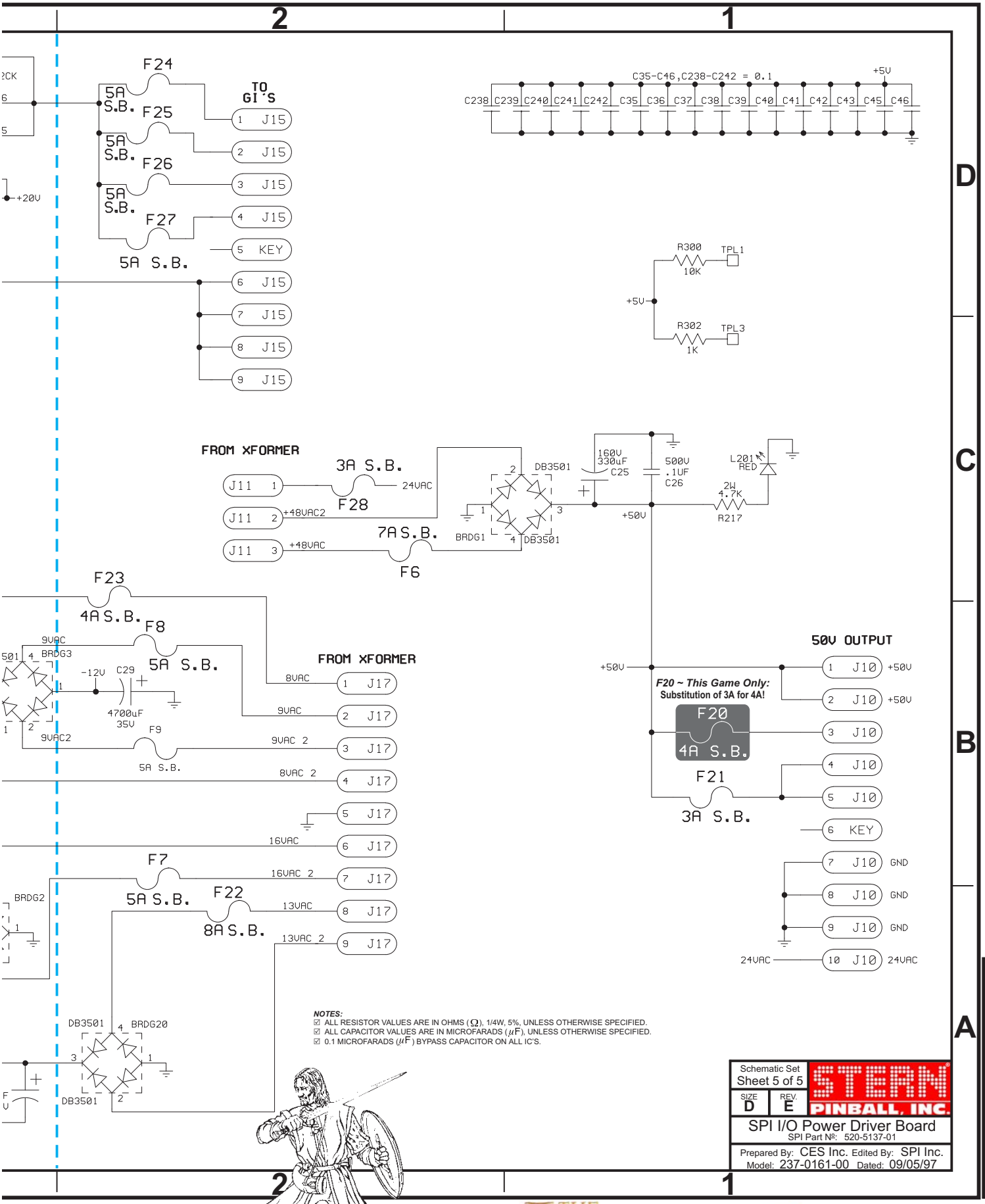
2
1
D
C
B
A
F24
5A S.B.
F25
5A S.B.
F26
5A S.B.
F27
5A S.B.
TO GI'S
J15
KEY
+20V
C35-C46,C238-C242 = 0.1
+5V
C238 C239 C240 C241 C242 C35 C36 C37 C38 C39 C40 C41 C42 C43 C45 C46
R300 10K TPL1
R302 1K TPL3
FROM XFORMER
J11
3A S.B.
F28
24VAC
+48VAC2
7A S.B.
F6
+48VAC
DB3501
BRDG1
160V 330uF C25
500V .1UF C26
+50V
L201 RED
2W 4.7K R217
F23
4A S.B.
F8
5A S.B.
9VAC
BRDG3
-12V
C29
4700uF 35V
9VAC2
F9
5A S.B.
FROM XFORMER
8VAC
9VAC
9VAC 2
8VAC 2
J17
16VAC
16VAC 2
13VAC
13VAC 2
F7
5A S.B.
F22
8A S.B.
BRDG2
DB3501
BRDG20
50V OUTPUT
J10
+50V
F20 ~ This Game Only:
Substitution of 3A for 4A!
F20
4A S.B.
F21
3A S.B.
GND
24VAC
NOTES:
ALL RESISTOR VALUES ARE IN OHMS (Ω), 1/4W, 5%, UNLESS OTHERWISE SPECIFIED.
ALL CAPACITOR VALUES ARE IN MICROFARADS (μF), UNLESS OTHERWISE SPECIFIED.
0.1 MICROFARADS (μF) BYPASS CAPACITOR ON ALL IC'S.
Schematic Set
Sheet 5 of 5
SIZE D
REV. E
STERN PINBALL, INC.
SPI I/O Power Driver Board
SPI Part №: 520-5137-01
Prepared By: CES Inc. Edited By: SPI Inc.
Model: 237-0161-00 Dated: 09/05/97

I/O Power Driver Board Component Layout

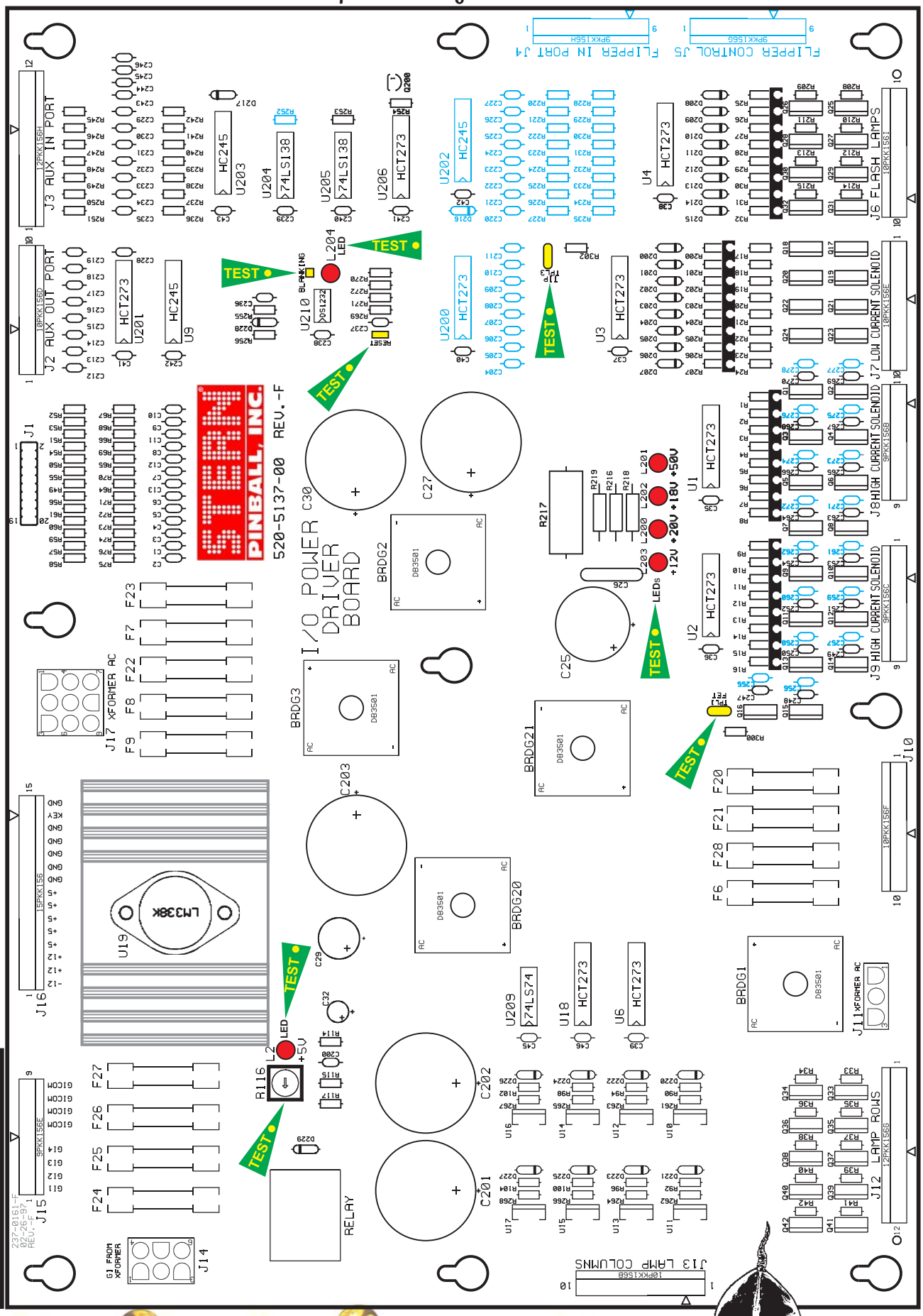

I/O Power Driver Board Parts

ITEM	QTY	PART NUMBER	REF-DESIGNATOR	DESCRIPTION (NS = Not Stuffed)
—	**1**	**520-5137-01**	**I/O Power Driver Board**	**Complete PCB Assembly**
01	5	112-5000-00	BRDG1, BRDG2, BRDG3, BRDG20, BRDG21	DB3501
02	13	125-5030-00	C1, C2, C3>C6, C7, C8, C9>C10, C11, C12	220pF, (221), Cap.
03	1	125-5033-00	C25	100uF, 150v, Radial Lytic Cap.
04	1	125-5035-00	C26	.1UF, 500v, Ceramic Disk Cap.
05	5	125-5036-00	C27, C30, C201, C202, C203	15000uF, 25v, Radial Lytic Cap.
06	1	125-5034-00	C29	4700uF, 35v, Radial Lytic Cap.
07	1	125-5032-00	C32	100uF, 25v, Radial Lytic Cap.
08	17	125-5031-00	C35, C36, C37, C38, C39, C40, C41, C42, C43, C45, C46, C200, C238, C239, C240, C241, C242	0.1uF, (104), Cap.
09	22	125-5028-00	C212>C219, C228>C237, C243>C246 (C204-C211: NS)	470pF, (471), Axial Cap.
10	0	n/a	(C220>C227: NS)	
11	16	125-5029-00	C247>C254, C263>C270	0.01uF, (103), 100v Cap.
12	0	125-5027-00	(C255>C262, C271>C278: NS)	0.1uF, (104), 100v, Cap.
13	25	112-0054-00	D200>D207, D208>D215, D220, D221, D222, D223, D224, D225, D226, D227	1N4148, Diode
14	2	112-5003-00	D217, D229 (D216: NS)	1N4004, Diode
15	26	205-0004-00	F6, F7, F8, F9, F20, F21, F22, F23, F24> F27, F28	Fuse Clips
16	1	200-5000-03	F6	7A 250v S.B. Fuse
17	7	200-5000-01	F7, F8, F9, F24>F27	5A 250v S.B. Fuse
18	2	200-5000-08	F21, F28	3A 250v S.B. Fuse
19	1	200-5000-05	F22	8A 250v S.B. Fuse
20	2	200-5000-06	**F20**, F23	4A 250v S.B. Fuse
21	1	045-5015-01	J1	20-Pin, 0.1 Dual Row Header
22	1	045-5014-01	J2 (Key Pin-4), J6 (Key Pin-9), J7 (Key Pin-5) J10 (Key Pin-6), J13 (Key Pin-2)	10PKK156
23	1	045-5015-00	J3 (Key Pin-8)	12PKK156
	0	n/a	(J4, J5: NS)	
24	1	045-5013-00	J8 (Key Pin-2), J9 (Key Pin-3), J15 (Key Pin-5)	9PKK156
25	1	045-0014-03	J11	10-84-4030 (3-Pin MOLEX)
26	1	045-5015-00	J12 (Key Pin-7)	12PKK156
27	1	045-0014-06	J14	10-84-4060 (6-Pin MOLEX)
28	1	045-5016-00	J16 (Key Pin-14)	15PKK156
29	1	045-0014-09	J17	10-84-4090 (9-Pin MOLEX)
30	**6**	**165-5099-00**	**L2, L200, L201, L202, L203, L204**	**LED T1-3/4 DIFFUSER LED**
31	16	110-0106-00	Q1>Q16	22NE10L STP, Transistor
32	16	110-0067-00	Q17>Q24, Q25>Q32	TIP122
33	10	110-0088-00	Q33>Q42	19N06L STP, Transistor
34	1	110-0069-00	Q200	2N3904, Transistor.
35	32	121-5042-00	R1>R8, R9>R16, R200>R207, R208>R215	22K Ω 1/4W Res.
36	16	121-5003-00	R17>R24, R25>R32	620 Ω 1/4W Res.
37	17	121-5045-00	R33>R42, R236>R242	39K Ω 1/4W Res.
38	8	121-5021-00	R49, R57>R61, R253, R256, R270 (R252: NS)	4.7K Ω 1/4W Res.
39	11	121-5011-00	R50>R56, R255, R271, R300	10K Ω 1/4W Res.
40	13	121-5007-00	R64>R76 Resistors on Solder Side @ J2-Pins: 1-3 & 5-9	100 Ω 1/4W Res.
41	8	121-5029-00	R90, R92, R94, R96, R98, R100, R102, R104	6.8K Ω 1/4W Res.
42	2	121-5033-00	R114, R269	220 Ω 1/4W Res.
43	1	121-5030-00	R115	120 Ω 1/4W Res.
44	1	121-5039-00	R116	50 Ω Pot
45	2	121-5036-00	R117, R272	330 Ω 1/4W Res.
46	2	121-5038-00	R216, R218	1.5K Ω 1/2W Res.
47	1	121-5050-00	R217	4.7K Ω 2W Res. (SANDBAR)
48	1	121-5009-00	R219, R245>R251, R254, R302 (R228>R235: NS)	1K Ω 1/4W Res.
49	8	121-5016-00	R261, R262, R263, R264, R265, R266, R267, R268	47 Ω 1/4W Res.
50	1	190-5002-00	RELAY	FRL264D024/02CK Relay
51	2	n/a	TPL1, TPL3	*Test Point Wire (24ga.) Loops*
52	8	100-5012-00	U1, U2, U3, U4, U6, U18, U201, U206 (U200: NS)	74HCT273
53	1	110-0058-00	U9	74LS245
54	1	100-5023-00	U210	DS1232
55	8	110-0089-00	U10, U11, U12, U13, U14, U15, U16, U17	VN02N
56	1	100-0356-00	U19	LM338K
57	1	n/a	U19	Heatsink (5v Reg.)
58	1	100-0338-00	U203 (U202: NS)	74HC245
59	2	100-0148-00	U204, U205	74LS138
60	1	100-0037-00	U209	74LS74
61	1	n/a	BLANKING, RESET	*Test Points*

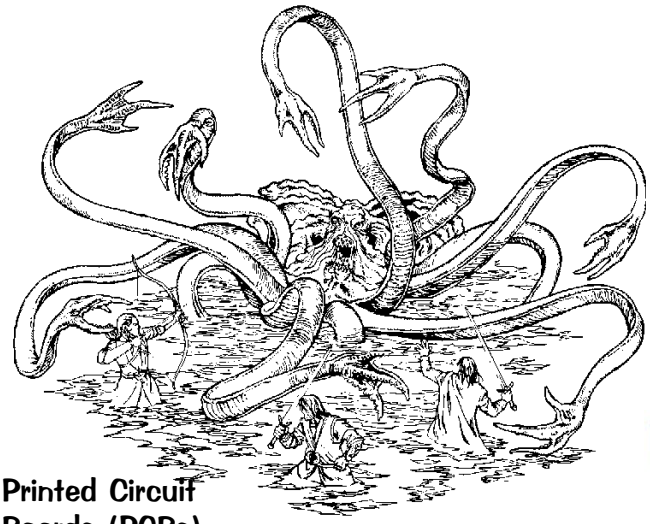

To view Playfields (above & below), click this box.

CPU Section:

The **CPU** is a **68B09E** (**U209**) with up to 8 MBytes of **CPU** *Code Space* (**U210**). The **CPU** code is bank selected by the use of **U211** and each bank consists of 16 KBytes. 8 KBytes of **RAM** (**U212**) is available to the **CPU**. The RAM is battery backed and has a write protected area. Battery back up is accomplished by **3-AA Cells** (**BAT1**) Battery Pack which has a **TEST POINT (TP): VBATT** to check the battery voltage status. The write protected area consists of 512 Bytes used for storing game settings. This section of **RAM** can only be written to when the coin door is open. The Coin Door switch comes into the **CPU** on **CN6-12** and is fed into the address decoding **PAL U213**. When this memory protect signal is low writes to the protected **RAM** area are prohibited. Address decoding for the system is accomplished by one **PAL U213** and one 1-of-8 decoder **U214**.

A watchdog is used to monitor the **CPU** and the 5v supply. If the 5v supply is below 4.75 the watchdog will hold the **CPU**/**Sound Board** & **I/O Board** in *reset*. The watchdog must be fed at a rate of ***250ms*** or faster. The signal used to feed the watchdog comes from the EPROM Bank select signal used to load **U211**.

The **I/O** Interface **CN1** is buffered by two (2) **HC245** Chips (**U207 & U208**). The **CPU**'s reset line is buffered by **Q10** and fed over to the **I/O** through **CN1**. An I/*O Strobe Signal* is fed through **CN1-15** and is used to notify the **I/O** that a valid address is being sent.

Switches:

The Switch Matrix consists of eight (8) **2N3904** Transistors(**Q1-Q8**) which pull one of 8 strobes 'low' to *activate* a Single Column of switches. The *Switch Return Signals* are fed into **CN7** [SWITCH ROWS] and are highly filtered and compared to a 2.5v *reference voltage*. The *Switch Return Voltage* must be below 2.5v to make a *Valid Switch Closure*. If *false switches* are appearing, check that none of the **2N3904** Transistors are permanently pulling the *strobe line low*. Only one strobe from **CN5** [SWITCH COLUMNS] should be *low at any time*. **CN6** [DEDICATED SWITCH IN] is a *Dedicated Bank of Input Switches*. Switches connected to **CN6** are connected to ground instead of a strobe and may be read at any time.

Plasma Interface:

The data path for communication to and from the **Plasma Controller Board** is 8 bits wide. There are separate *Input* and *Output Busses*. Data going out to the controller comes from the **CPU**'s *Data Bus* through **U201** and onto **CN8-Pins 11-18**. Status back from the Plasma Controller comes in on **CN8-Pins 22-26** and is fed into **U202** for input to the **CPU**'s *Data Bus*. Two control signals that go out to the Plasma Controller are **PRES** [TP17: PLASMA RESET] and **CN8-Pin 19** [**PSTB** - *Plasma Strobe*]. The Plasma Reset is software controllable through **U216**/**B** and also has a test point "Plasma Reset". The *Plasma Strobe Signal* to the controller is generated from **U216**/**A** and is *used to latch data* into the Plasma Controller.

Other Test Points (TP):

TP 7: E & **TP5: Q** - The **CPU** signals for both **68B09E** processors. Should be at 2Mhz with **Q** leading **E** by ***500 nsec***. **TP2: P0. TP3: P1. TP4: P2. TP20:** *(near U402)***. TP8:** *(near U219)***. TP1: +3.3V.**

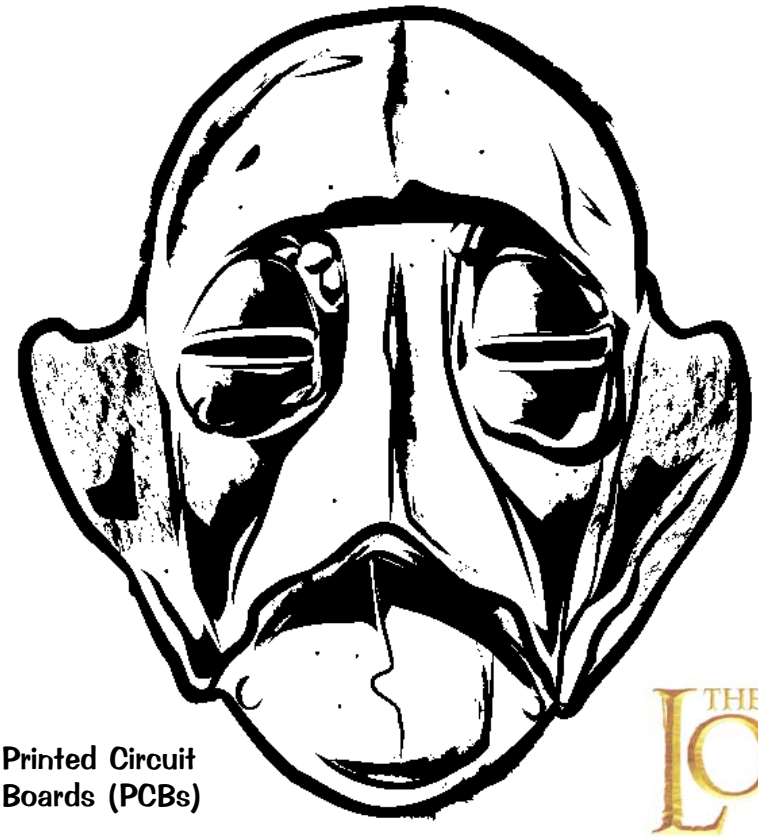

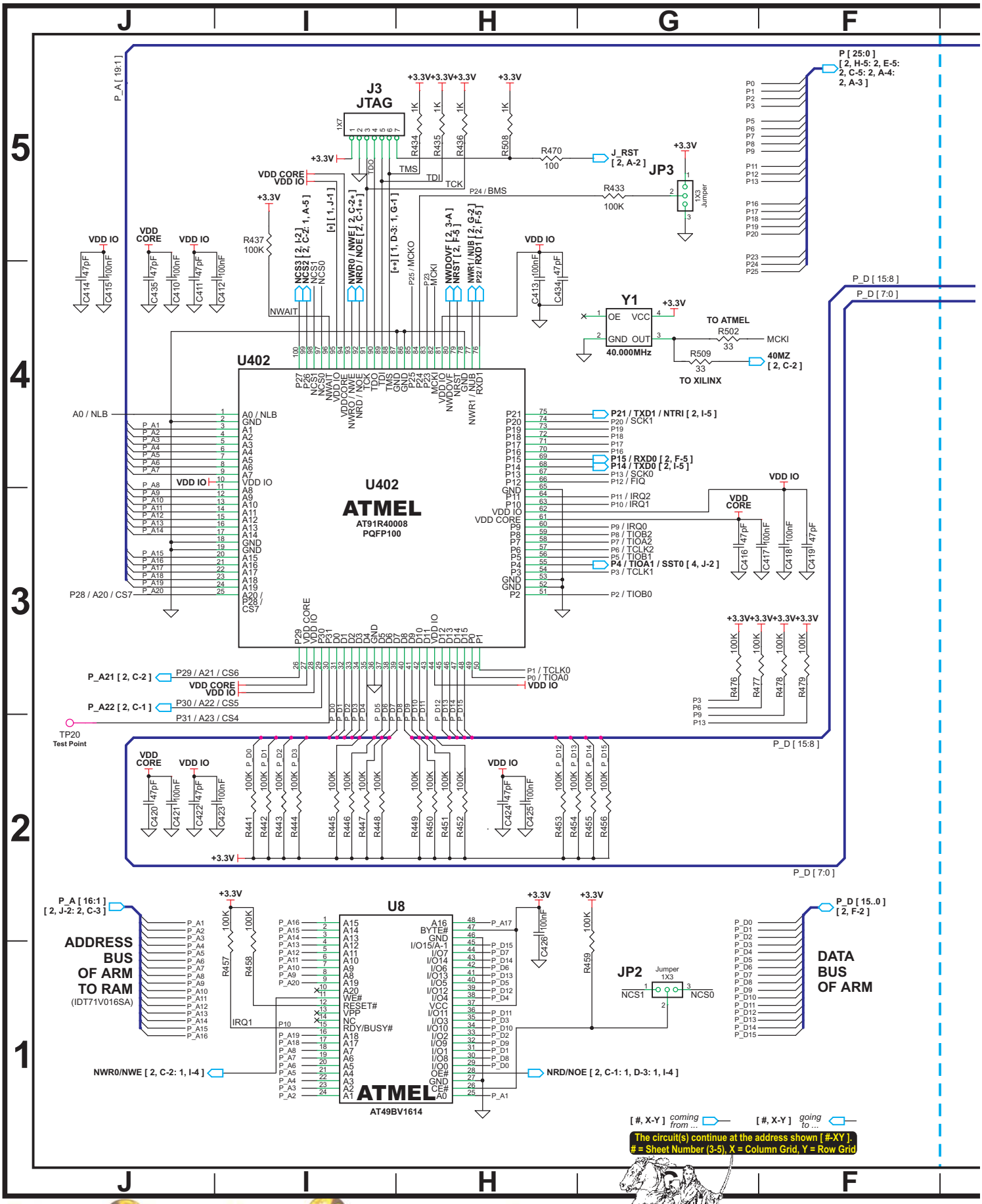
J3
JTAG
U402
ATMEL
AT91R40008
PQFP100
Y1
40.000MHz
TO ATMEL
TO XILINX
JP3
JP2
U8
ATMEL
AT49BV1614
ADDRESS BUS OF ARM TO RAM
(IDT71V016SA)
DATA BUS OF ARM
TP20
Test Point
The circuit(s) continue at the address shown [#-XY].
= Sheet Number (3-5), X = Column Grid, Y = Row Grid

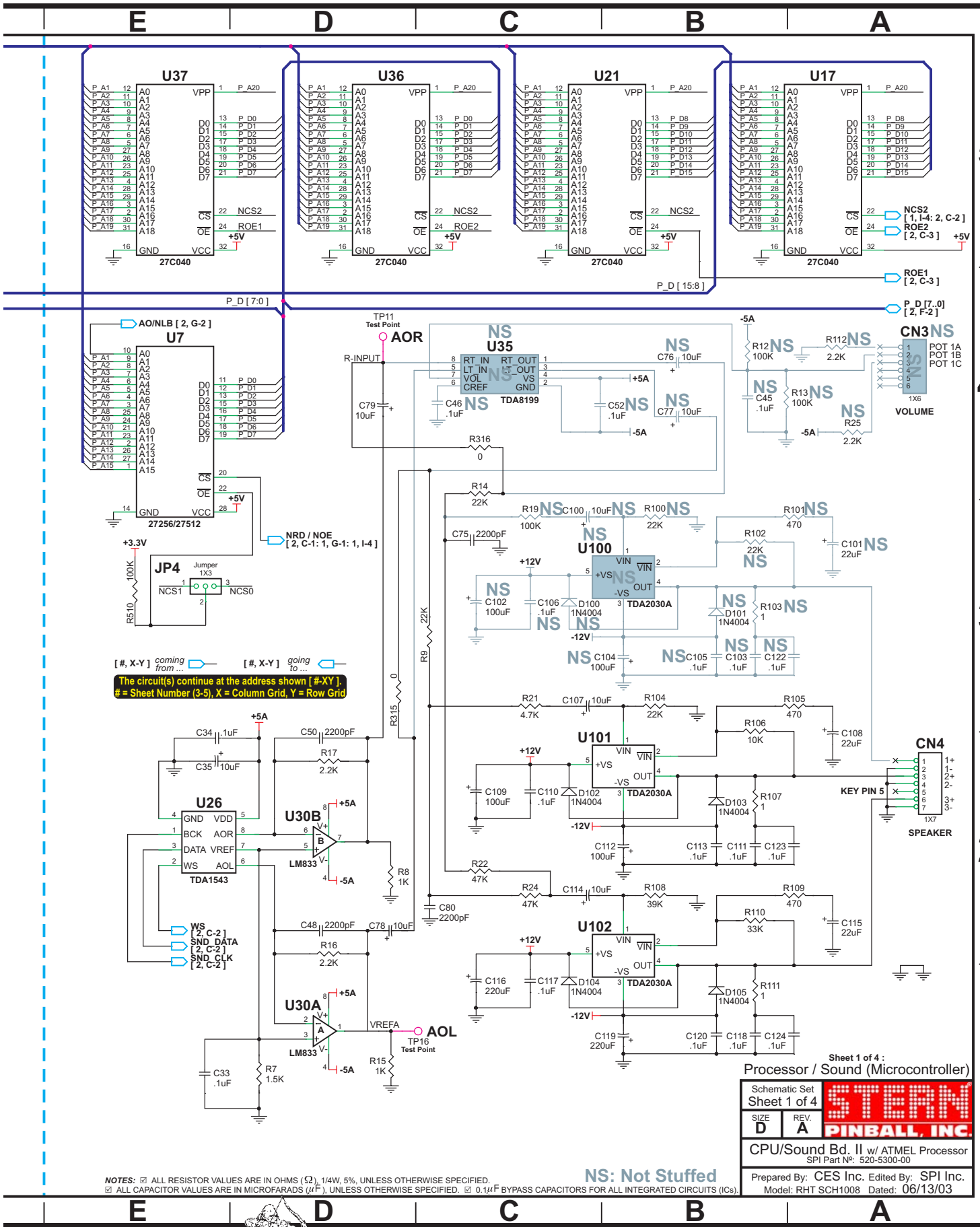
U37
U36
U21
U17
27C040
P_D [15:8]
P_D [7:0]
P_D [7..0] [2, F-2]
ROE1 [2, C-3]
NCS2 [1, I-4: 2, C-2]
ROE2 [2, C-3]
AO/NLB [2, G-2]
U7
27256/27512
NRD / NOE [2, C-1: 1, G-1: 1, I-4]
JP4
Jumper 1X3
NCS1
NCS0
TP11 Test Point
AOR
R-INPUT
U35
TDA8199
CN3
POT 1A
POT 1B
POT 1C
1X6
VOLUME
U100
U101
U102
TDA2030A
CN4
KEY PIN 5
SPEAKER
1X7
U26
TDA1543
U30B
U30A
LM833
WS [2, C-2]
SND_DATA [2, C-2]
SND_CLK [2, C-2]
AOL
TP16 Test Point
VREFA
[#, X-Y] coming from ...
[#, X-Y] going to ...
The circuit(s) continue at the address shown [#-XY].
= Sheet Number (3-5), X = Column Grid, Y = Row Grid
NS: Not Stuffed
Sheet 1 of 4 :
Processor / Sound (Microcontroller)
Schematic Set Sheet 1 of 4
SIZE D
REV. A
STERN PINBALL, INC.
CPU/Sound Bd. II w/ ATMEL Processor
SPI Part №: 520-5300-00
Prepared By: CES Inc. Edited By: SPI Inc.
Model: RHT SCH1008 Dated: 06/13/03
NOTES: ☑ ALL RESISTOR VALUES ARE IN OHMS (Ω), 1/4W, 5%, UNLESS OTHERWISE SPECIFIED.
☑ ALL CAPACITOR VALUES ARE IN MICROFARADS (μF), UNLESS OTHERWISE SPECIFIED. ☑ 0.1μF BYPASS CAPACITORS FOR ALL INTEGRATED CIRCUITS (ICs).

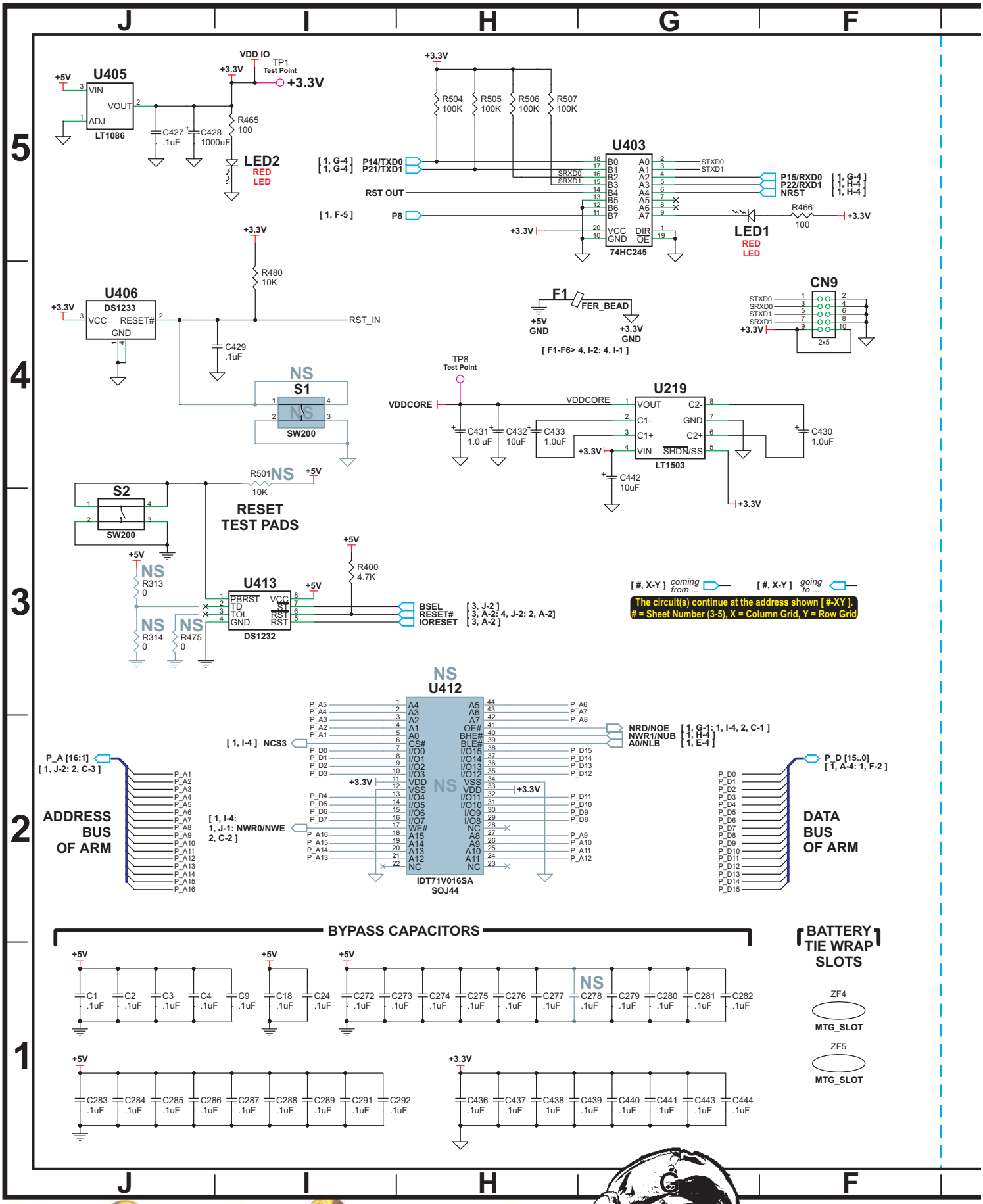
U405
LT1086
VIN
VOUT
ADJ
+5V
VDD IO
+3.3V
TP1
Test Point
C427 .1uF
C428 1000uF
R465 100
LED2
RED LED
R504 100K
R505 100K
R506 100K
R507 100K
U403
74HC245
P14/TXD0
P21/TXD1
RST OUT
P8
STXD0
STXD1
SRXD0
SRXD1
P15/RXD0
P22/RXD1
NRST
R466 100
LED1
RED LED
U406
DS1233
VCC
RESET#
GND
R480 10K
RST_IN
C429 .1uF
F1
FER_BEAD
+5V GND
+3.3V GND
[F1-F6> 4, I-2: 4, I-1]
CN9
2x5
NS
S1
SW200
TP8
Test Point
VDDCORE
U219
LT1503
VOUT
C1-
C1+
VIN
C2-
GND
C2+
SHDN/SS
C431 1.0 uF
C432 10uF
C433 1.0uF
C430 1.0uF
C442 10uF
S2
SW200
R501 10K
RESET TEST PADS
R313 0
R314 0
R475 0
U413
DS1232
PBRST
TD
TOL
GND
VCC
ST
RST
R400 4.7K
BSEL
RESET#
IORESET
[3, J-2]
[3, A-2: 4, J-2: 2, A-2]
[3, A-2]
[#, X-Y] coming from ...
[#, X-Y] going to ...
The circuit(s) continue at the address shown [#-XY].
= Sheet Number (3-5), X = Column Grid, Y = Row Grid
U412
IDT71V016SA
SOJ44
[1, I-4] NCS3
[1, I-4: 1, J-1: NWR0/NWE 2, C-2]
NRD/NOE
NWR1/NUB
A0/NLB
[1, G-1: 1, I-4, 2, C-1]
[1, H-4]
[1, E-4]
P_A [16:1]
[1, J-2: 2, C-3]
ADDRESS BUS OF ARM
P_D [15..0]
[1, A-4: 1, F-2]
DATA BUS OF ARM
BYPASS CAPACITORS
C1 .1uF
C2 .1uF
C3 .1uF
C4 .1uF
C9 .1uF
C18 .1uF
C24 .1uF
C272 .1uF
C273 .1uF
C274 .1uF
C275 .1uF
C276 .1uF
C277 .1uF
C278 .1uF
C279 .1uF
C280 .1uF
C281 .1uF
C282 .1uF
C283 .1uF
C284 .1uF
C285 .1uF
C286 .1uF
C287 .1uF
C288 .1uF
C289 .1uF
C291 .1uF
C292 .1uF
C436 .1uF
C437 .1uF
C438 .1uF
C439 .1uF
C440 .1uF
C441 .1uF
C443 .1uF
C444 .1uF
BATTERY TIE WRAP SLOTS
ZF4
MTG_SLOT
ZF5
MTG_SLOT

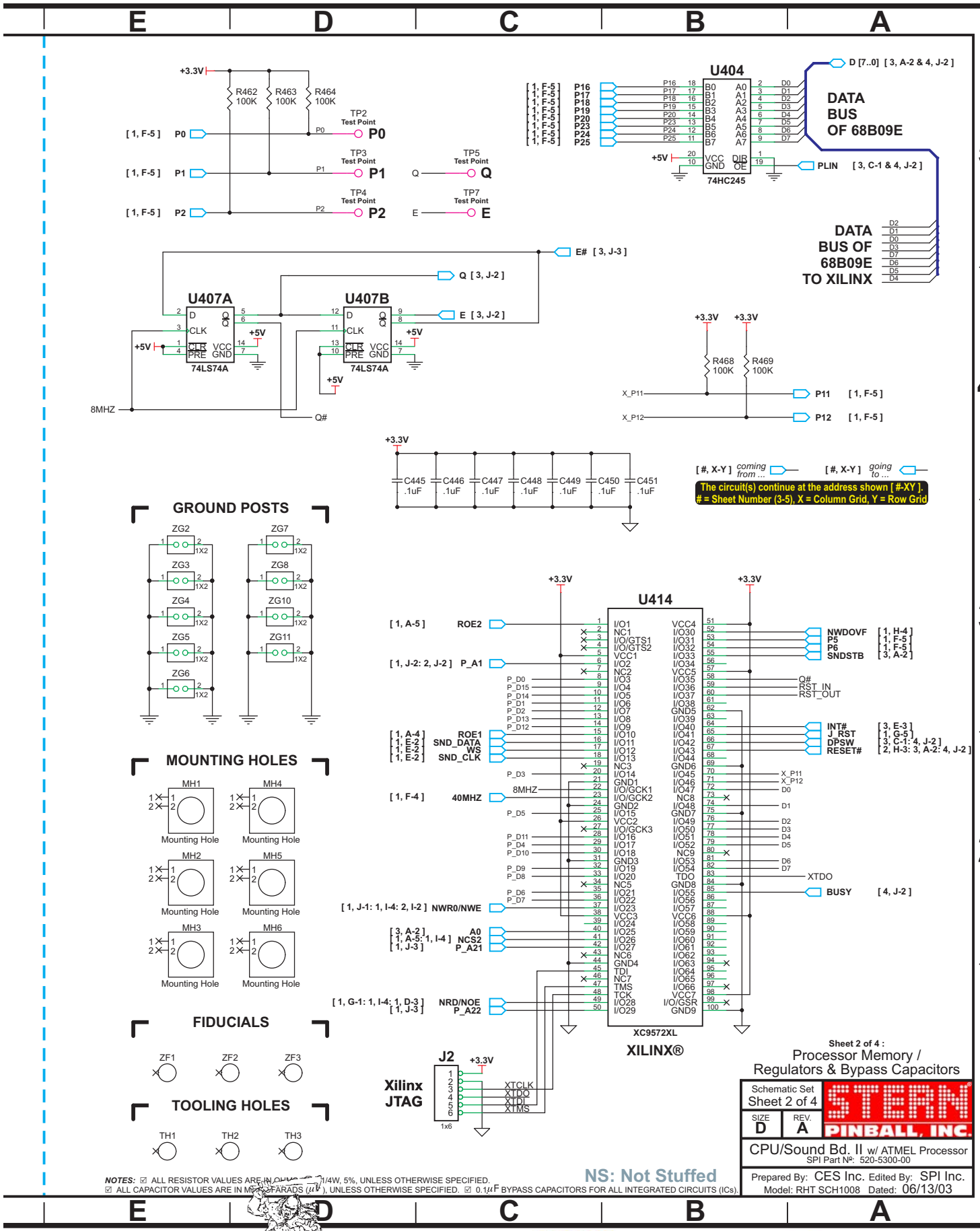
E D C B A
5 4 3 2 1
+3.3V
R462 100K
R463 100K
R464 100K
[1, F-5] P0
[1, F-5] P1
[1, F-5] P2
TP2 Test Point P0
TP3 Test Point P1
TP4 Test Point P2
TP5 Test Point Q
TP7 Test Point E
U404
74HC245
D [7..0] [3, A-2 & 4, J-2]
DATA BUS OF 68B09E
PLIN [3, C-1 & 4, J-2]
DATA BUS OF 68B09E TO XILINX
E# [3, J-3]
Q [3, J-2]
E [3, J-2]
U407A
U407B
74LS74A
8MHZ
Q#
R468 100K
R469 100K
X_P11
X_P12
P11 [1, F-5]
P12 [1, F-5]
C445 .1uF
C446 .1uF
C447 .1uF
C448 .1uF
C449 .1uF
C450 .1uF
C451 .1uF
[#, X-Y] coming from ...
[#, X-Y] going to ...
The circuit(s) continue at the address shown [#-XY].
= Sheet Number (3-5), X = Column Grid, Y = Row Grid
GROUND POSTS
ZG2
ZG3
ZG4
ZG5
ZG6
ZG7
ZG8
ZG10
ZG11
1X2
MOUNTING HOLES
MH1
MH2
MH3
MH4
MH5
MH6
Mounting Hole
FIDUCIALS
ZF1
ZF2
ZF3
TOOLING HOLES
TH1
TH2
TH3
U414
XC9572XL
XILINX®
[1, A-5] ROE2
[1, J-2: 2, J-2] P_A1
[1, A-4] ROE1
[1, E-2] SND_DATA
[1, E-2] WS
[1, E-2] SND_CLK
[1, F-4] 40MHZ
[1, J-1: 1, I-4: 2, I-2] NWR0/NWE
[3, A-2] A0
[1, A-5: 1, I-4] NCS2
[1, J-3] P_A21
[1, G-1: 1, I-4: 1, D-3] NRD/NOE
[1, J-3] P_A22
NWDOVF [1, H-4]
P5 [1, F-5]
P6 [1, F-5]
SNDSTB [3, A-2]
Q#
RST_IN
RST_OUT
INT# [3, E-3]
J_RST [1, G-5]
DPSW [3, C-1: 4, J-2]
RESET# [2, H-3: 3, A-2: 4, J-2]
XTDO
BUSY [4, J-2]
J2
Xilinx JTAG
XTCLK
XTDO
XTDI
XTMS
1x6
Sheet 2 of 4 :
Processor Memory / Regulators & Bypass Capacitors
Schematic Set Sheet 2 of 4
SIZE D
REV. A
STERN PINBALL, INC.
CPU/Sound Bd. II w/ ATMEL Processor
SPI Part №: 520-5300-00
Prepared By: CES Inc. Edited By: SPI Inc.
Model: RHT SCH1008 Dated: 06/13/03
NS: Not Stuffed
NOTES: ☑ ALL RESISTOR VALUES ARE IN OHMS, 1/4W, 5%, UNLESS OTHERWISE SPECIFIED.
☑ ALL CAPACITOR VALUES ARE IN MICROFARADS (μF), UNLESS OTHERWISE SPECIFIED. ☑ 0.1μF BYPASS CAPACITORS FOR ALL INTEGRATED CIRCUITS (ICs).

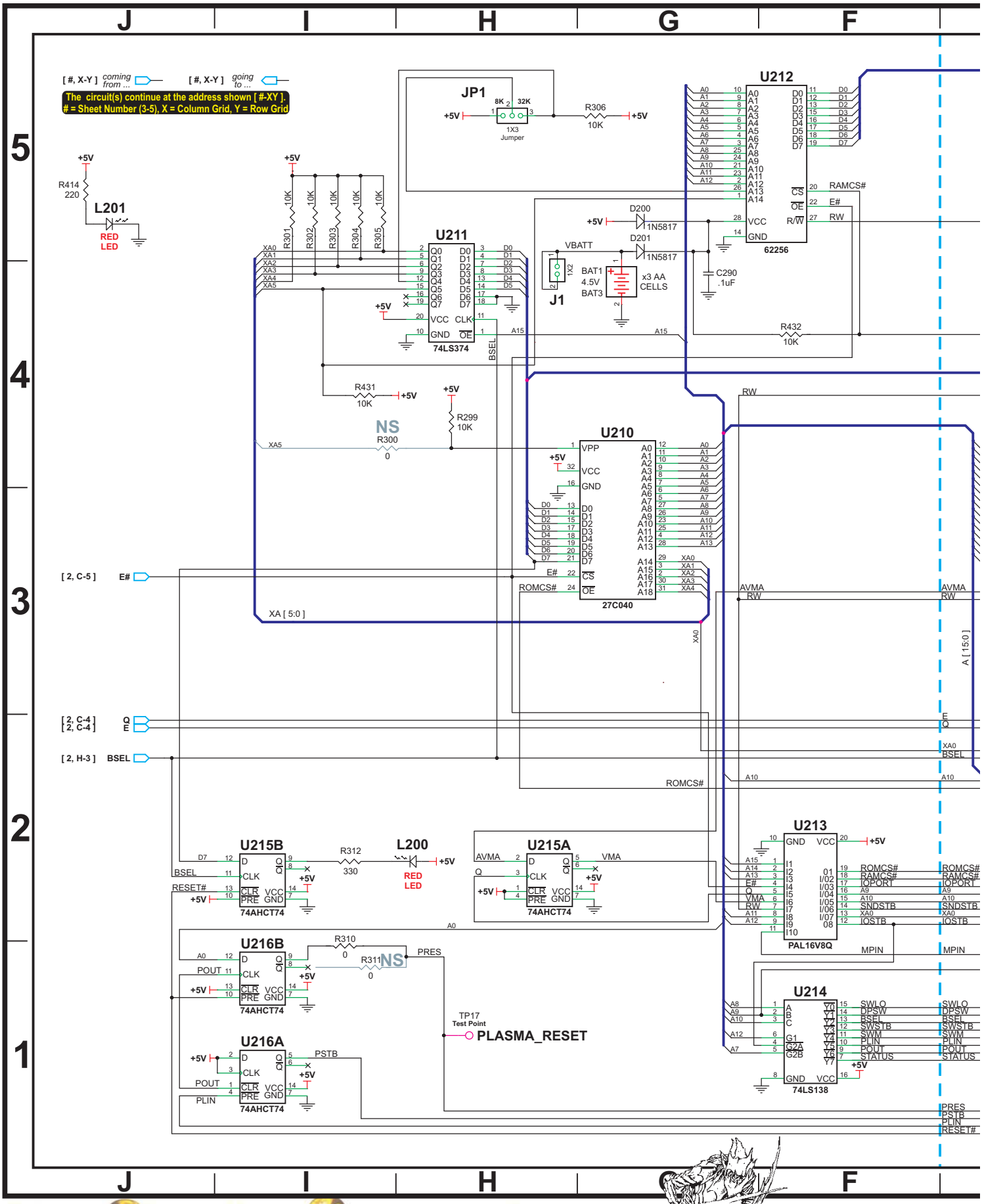
[#, X-Y] coming from ...
[#, X-Y] going to ...
The circuit(s) continue at the address shown [#-XY].
= Sheet Number (3-5), X = Column Grid, Y = Row Grid
JP1
1X3 Jumper
R306 10K
U212
62256
U211
74LS374
U210
27C040
L201
RED LED
R414 220
R301 10K
R302 10K
R303 10K
R304 10K
R305 10K
D200 1N5817
D201 1N5817
VBATT
J1
BAT1 4.5V BAT3
x3 AA CELLS
C290 .1uF
R432 10K
R431 10K
R299 10K
NS
R300 0
U215B
74AHCT74
R312 330
L200
RED LED
U215A
74AHCT74
U213
PAL16V8Q
U216B
74AHCT74
R310 0
R311 0
U216A
74AHCT74
TP17 Test Point
PLASMA_RESET
U214
74LS138
[2, C-5] E#
[2, C-4] Q
[2, C-4] E
[2, H-3] BSEL
XA [5:0]
A [15:0]
ROMCS#
RAMCS#
IOPORT
SNDSTB
IOSTB
MPIN
SWLO
DPSW
BSEL
SWSTB
SWM
PLIN
POUT
STATUS
PRES
PSTB
RESET#

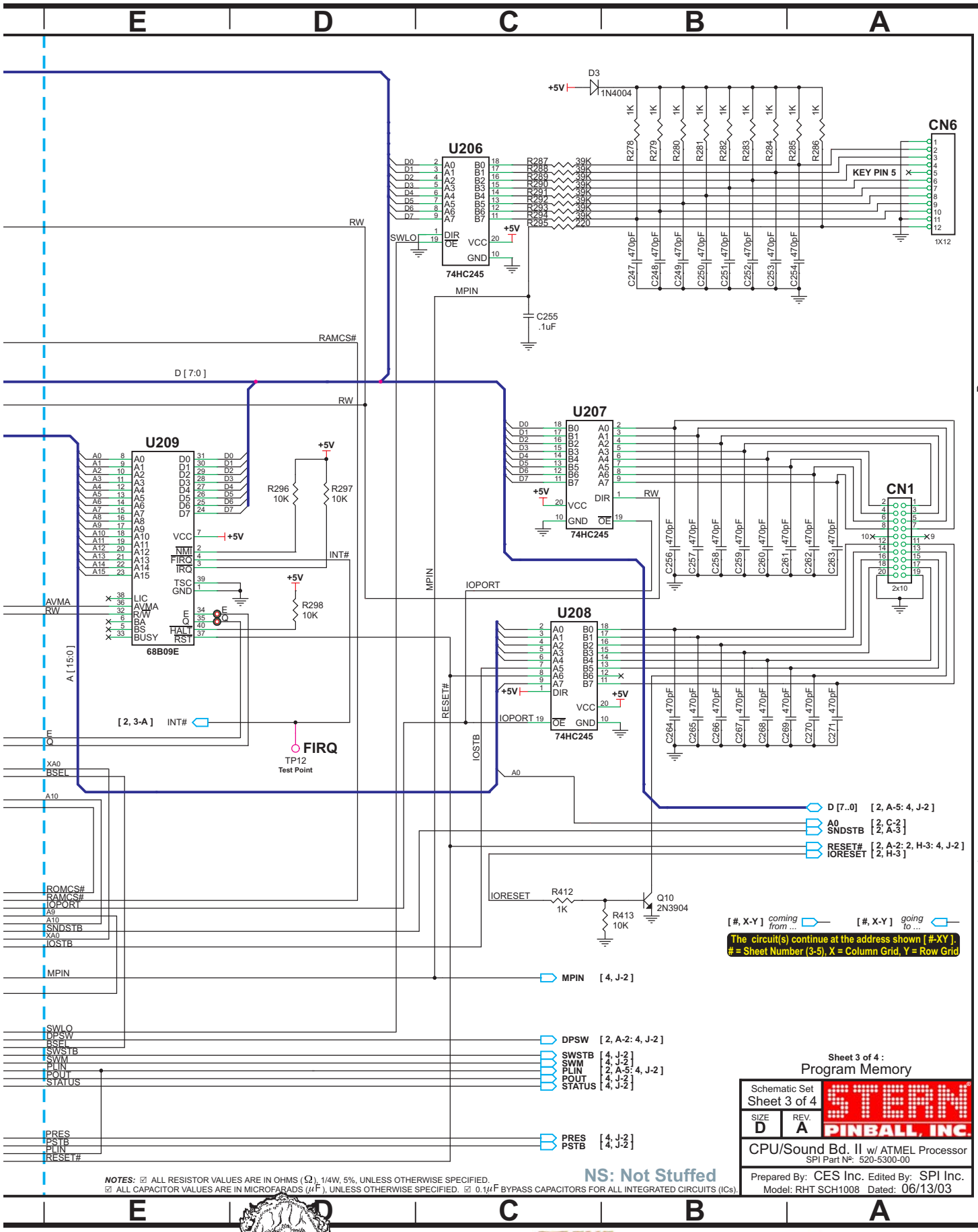
U206
74HC245
U207
74HC245
U208
74HC245
U209
68B09E
CN6
1X12
CN1
2x10
D3
1N4004
+5V
KEY PIN 5
RW
SWLO
MPIN
C255
.1uF
RAMCS#
D [7:0]
R296
10K
R297
10K
R298
10K
INT#
AVMA
A [15:0]
[2, 3-A]
FIRQ
TP12
Test Point
IOPORT
RESET#
IOSTB
IORESET
R412
1K
R413
10K
Q10
2N3904
ROMCS#
SNDSTB
XA0
BSEL
A10
A9
SWSTB
SWM
PLIN
POUT
STATUS
PRES
PSTB
D [7..0] [2, A-5: 4, J-2]
A0 [2, C-2]
SNDSTB [2, A-3]
RESET# [2, A-2: 2, H-3: 4, J-2]
IORESET [2, H-3]
MPIN [4, J-2]
DPSW [2, A-2: 4, J-2]
SWSTB [4, J-2]
SWM [4, J-2]
PLIN [2, A-5: 4, J-2]
POUT [4, J-2]
STATUS [4, J-2]
PRES [4, J-2]
PSTB [4, J-2]
[#, X-Y] coming from ...
[#, X-Y] going to ...
The circuit(s) continue at the address shown [#-XY].
= Sheet Number (3-5), X = Column Grid, Y = Row Grid
Sheet 3 of 4 :
Program Memory
Schematic Set
Sheet 3 of 4
SIZE D
REV. A
STERN PINBALL, INC.
CPU/Sound Bd. II w/ ATMEL Processor
SPI Part №: 520-5300-00
Prepared By: CES Inc. Edited By: SPI Inc.
Model: RHT SCH1008 Dated: 06/13/03
NS: Not Stuffed
NOTES: ☑ ALL RESISTOR VALUES ARE IN OHMS (Ω), 1/4W, 5%, UNLESS OTHERWISE SPECIFIED.
☑ ALL CAPACITOR VALUES ARE IN MICROFARADS (μF), UNLESS OTHERWISE SPECIFIED. ☑ 0.1μF BYPASS CAPACITORS FOR ALL INTEGRATED CIRCUITS (ICs).

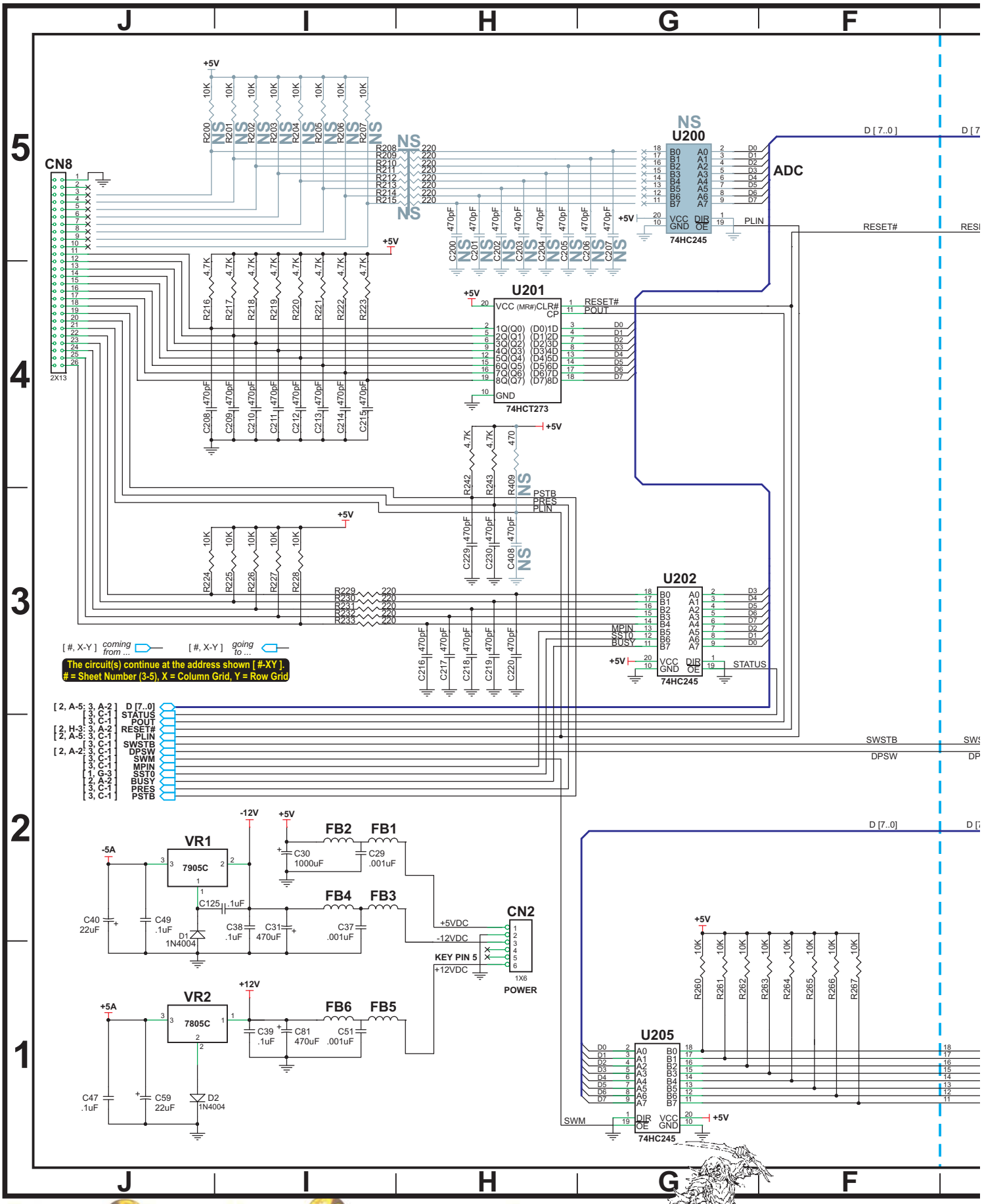
CN8
2X13
U200
74HC245
ADC
U201
74HCT273
U202
74HC245
U205
74HC245
VR1
7905C
VR2
7805C
CN2
1X6
POWER
KEY PIN 5
D [7..0]
RESET#
SWSTB
DPSW
PSTB
PRES
PLIN
STATUS
MPIN
SST0
BUSY
SWM
POUT
+5VDC
-12VDC
+12VDC
The circuit(s) continue at the address shown [#-XY].
= Sheet Number (3-5), X = Column Grid, Y = Row Grid

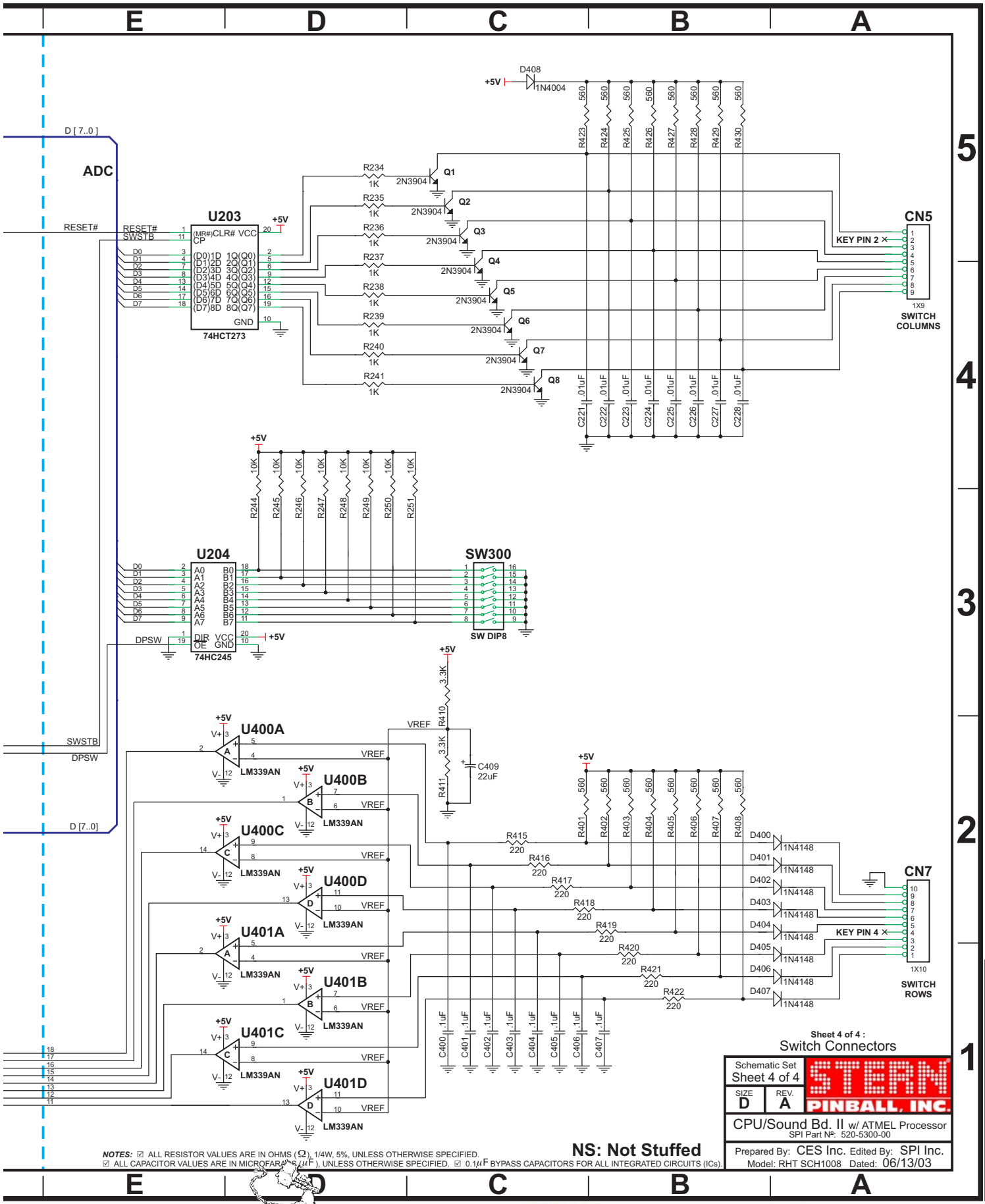
E D C B A
5 4 3 2 1
D [7..0]
ADC
RESET#
SWSTB
D [7..0]
DPSW
U203
74HCT273
U204
74HC245
SW300
SW DIP8
CN5
SWITCH COLUMNS
KEY PIN 2
CN7
SWITCH ROWS
KEY PIN 4
U400A
U400B
U400C
U400D
U401A
U401B
U401C
U401D
LM339AN
VREF
+5V
D408
1N4004
Q1
Q2
Q3
Q4
Q5
Q6
Q7
Q8
2N3904
R234
R235
R236
R237
R238
R239
R240
R241
1K
R423
R424
R425
R426
R427
R428
R429
R430
560
C221
C222
C223
C224
C225
C226
C227
C228
.01uF
R244
R245
R246
R247
R248
R249
R250
R251
10K
R410
R411
3.3K
C409
22uF
R415
R416
R417
R418
R419
R420
R421
R422
220
R401
R402
R403
R404
R405
R406
R407
R408
D400
D401
D402
D403
D404
D405
D406
D407
1N4148
C400
C401
C402
C403
C404
C405
C406
C407
.1uF
Sheet 4 of 4 :
Switch Connectors
Schematic Set
Sheet 4 of 4
SIZE D
REV. A
STERN PINBALL, INC.
CPU/Sound Bd. II w/ ATMEL Processor
SPI Part №: 520-5300-00
Prepared By: CES Inc. Edited By: SPI Inc.
Model: RHT SCH1008 Dated: 06/13/03
NS: Not Stuffed
NOTES: ☑ ALL RESISTOR VALUES ARE IN OHMS (Ω), 1/4W, 5%, UNLESS OTHERWISE SPECIFIED.
☑ ALL CAPACITOR VALUES ARE IN MICROFARADS (μF), UNLESS OTHERWISE SPECIFIED. ☑ 0.1μF BYPASS CAPACITORS FOR ALL INTEGRATED CIRCUITS (ICs).

CPU/Sound Board II (with ATMEL Processor) Component Layout

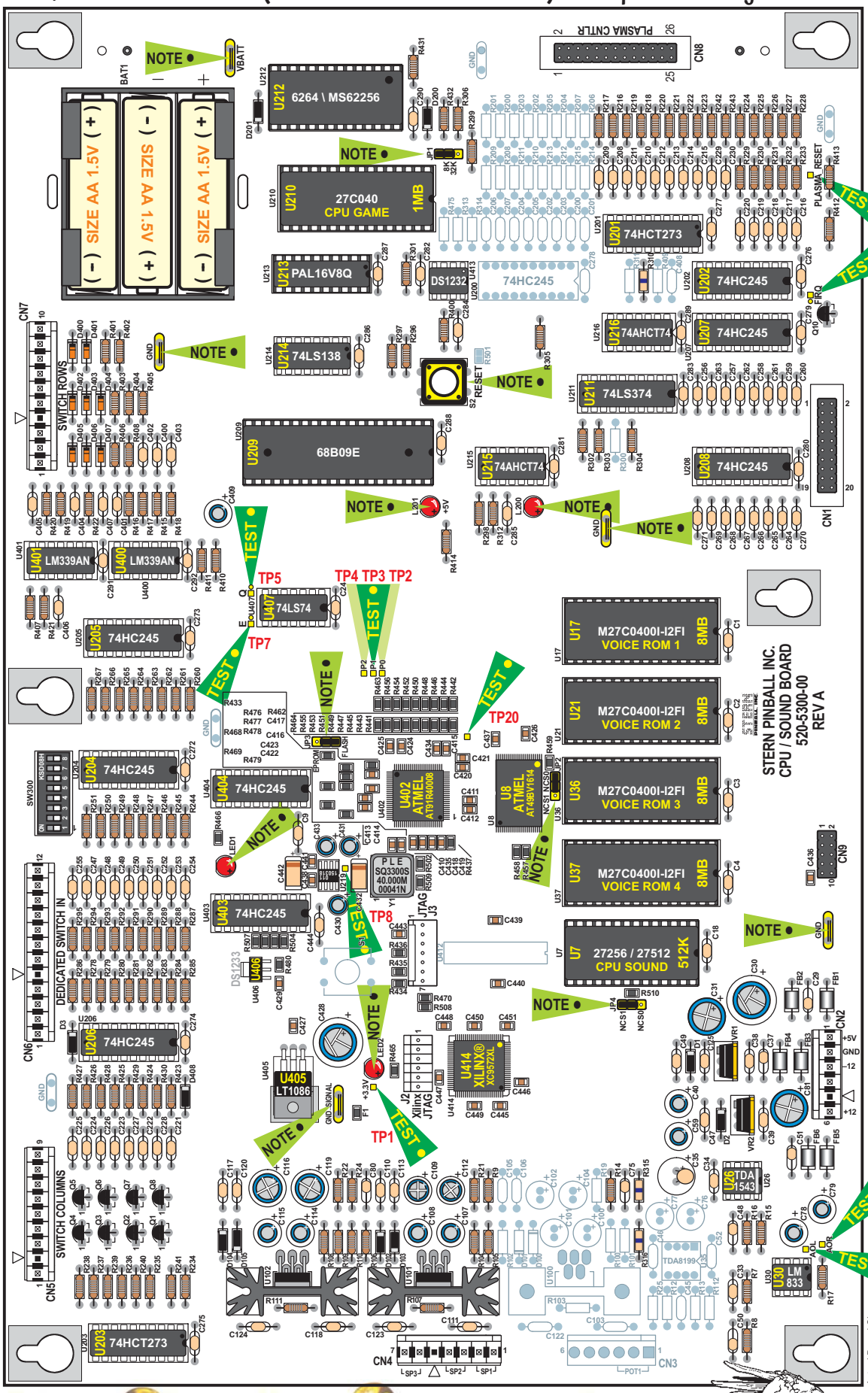

Test Points (TP):

TEST NOTE

- ←VBATT [3, G-4]
- 8K/32K
- ←JP1 [3, H-5]
- ←PLASMA_RESET TP17: [3, H-1]
- TP17
- TP12
- ←FIRQ TP12: [3, D-2]
- ←GND
- ←S2 RESET [2, J-3] SW200
- LEDs
- ←L201 / L200 [3, J-5] & [3, H-2]
- ←GND
- ←Q TP5: [2, C-5]
- ←E TP7: [2, C-5]
- ←P2, P1, P0 TP4, TP3, TP2: [2, D-5]
- ←U402 TP20: [1, J-2]
- JP3 [1, G-5]
- ←JP2 [1, G-1]
- ←U219 TP8: [2, H-4]
- ←LED1 [2, G-5]
- ←JTAG J3 [1, I-5]
- ←GND
- ←JP4 [1, E-3]
- ←JTAG J2 XILINX [2, C-1]
- ←LED2 [2, I-5]
- ←+3.3V TP1: [2, I-5]
- ←GND_SIGNAL
- TP11
- ←AOL & AOR TP16: [1, C-1], TP11: [1, D-4]

CPU/Sound II Board (with Atmel Processor) Parts

	ITEM	QTY	PART NUMBER	REF-DESIGNATOR	DESCRIPTION (NS = Not Stuffed)
	—	**1**	**520-5300-00**	**CPU/Sound II Board (with Atmel Processor)**	**Complete PCB Assembly**
Connectors	01	4		JP1, JP2, JP3, JP4	3-Pin Jumper & 2-Pin Cover
	02	1	045-5015-06	CN2 (Key Pin-5)	6-Pin, 6PKK156
	03	1		J2 JTAG Xilinx®	6-Pin, Header
	04	1	045-5015-07	CN4 (Key Pin-5)	7-Pin, 7PKK156
	05	1		J3 JTAG	7-Pin, Header
	06	1	045-5013-00	CN5 (Key Pin-2)	9-Pin, 9PKK156
	07	1		CN9	10-Pin, 0.1 Header
	08	1	045-5014-01	CN7 (Key Pin-4)	10-Pin, 10PKK156
	09	1	045-5015-00	CN6 (Key Pin-5)	12-Pin, 12PKK156
	10	1	045-5015-01	CN1	20-Pin, 0.1 Header
	11	1	045-5015-26	CN8	26-Pin, 0.1 Header
Capacitors*	12	3	125-5043-00	C29, C37, C51	0.001uF (102), Cap.
	13	4	125-5039-00	C48, C50, C75, C80	0.0022uF *or* 2200pF, (222), Cap.
	14	8	125-5029-00	C221>C228	0.01uF (103), 100v Cap.
	15	52	125-5031-00	C1>C4, C9, C18, C24, C33, C34, C38, C39, C47, C49, C110, C111, C113, C117, C118, C120, C123, C124, C125, C255, C272>C277, C279>C292, C400>C407, C444 (C45, C46, C52, C103, C105, C106, C122, C278: NS)	0.1uF (104), Axial Cer. Cap.
	16	3		C430, C431, C433 *(near U403, U404)*	1.0uF, v, Radial Lytic Cap.
	17	1	125-5017-00	C35	10uF, 16v, Radial Tant. Cap.
	18	4	125-5017-00	C78, C79, C107, C114 (C76, C77, C100: NS)	10uF, 25v-35v, Radial Lytic Cap.
	19	2	125-5015-00	C109, C112 (C102, C104: NS)	100uF, 25v, Radial Lytic Cap.
	20	1	125-5014-00	C409	22uF, 16v, Radial Lytic Cap.
	21	4	125-5020-00	C40, C59, C108, C115 (C101: NS)	22uF, 25v, Radial Lytic Cap.
	22	2	125-5012-00	C116, C119	220uF, 25v, Radial Lytic Cap.
	23	2	125-5019-00	C31, C81	470uF, 25v, Radial Lytic Cap.
	24	39	125-5028-00	C208>C215, C216>C220, C229, C230, C247>C254, C256>C263, C264>C271 (C200>C207, C408: NS)	470pF (471), Cer. Cap.
	25	2	125-5037-00	C30, C428	1000uF, 16v, Radial Lytic Cap.
	26	17		C427, C429, C436>C441, C443, C445>C451	SMT .1uF Cap.
	27	2		C432, C442 *(near U403 & U404)*	SMT 10uF Cap.
	28	9		C411, C414, C416, C419, C420, C422, C424, C434, C435	SMT 47pF Cap.
	29	10		C410, C412, C413, C415, C417, C418, C421, C423, C425, C426	SMT 100nF Cap.
Diodes & LEDs*	30	7	112-5003-00	D1>D3, D102>D105, D408 (D100, D101: NS)	1N4004, Diode
	31	2	112-5008-00	D200, D201	1N5817, Diode
	32	8	112-0054-00	D400-D407	1N4148, Diode
	33	4	165-5099-00	**LED1, LED2, L200, L201**	**LED T1-3/4 DIFFUSER LED**
Resistors / Transistors*	34	3	124-5064-00	R310, R315, R316 (R300, R311, R313, R314, R475: NS)	0Ω Jumper Res. (1-Stripe)
	35	2	121-5041-00	R107, R111 (R103: NS)	1 Ω 1/4W Res.
	35	20	121-5009-00	R8, R15, R234>R241, R278>R286, R412	1K Ω 1/4W Res.
	36	1	121-5018-00	R7	1.5K Ω 1/4W Res.
	37	2	121-5043-00	R16, R17 (R25, R112: NS)	2.2K Ω 1/4W Res.
	38	2	121-5048-00	R410, R411	3.3K Ω 1/4W Res.
	39	12	121-5021-00	R21, R216>R223, R242, R243, R400	4.7K Ω 1/4W Res.
	40	36	121-5011-00	R106, R224>R228, R244>R251,R260>R267, R296>R299, R301>R306, R413, R431, R432 (R200>R207, R501: NS)	10K Ω 1/4W Res.
	41	3	121-5023-00	R9, R14, R104 (R100, R102: NS)	22K W 1/4W Res.
	42	1	121-5022-04	R110	33K Ω 1/4W Res.
	43	9	121-5045-00	R108, R287>R294	39K Ω Res.
	44	2	121-5032-00	R22, R24	47K Ω 1/4W Res.
	45	15	121-5014-00	R229>R233, R295, R414>R422 (R208>R215: NS)	220 Ω 1/4W Res.
	46	1	121-5036-00	R312	330 Ω 1/4W Res.
	47	2	121-5046-01	R105, R109 (R101, R409: NS)	470 Ω 1/4W Res.
	48	16	121-5047-00	R401>R408, R423>R430	560 Ω 1/4W Res.
	49	1		F1	SMT Res.
	50	4		R434, R435, R436, R508	SMT 1K Ω Res.
	51	1		R480	SMT 10K Ω Res.
	52	2		R502, R509	SMT 33 Ω Res.
	53	3		R465, R466, R470	SMT 100 Ω Res.
	54	35		R433, R437, R441>R459, R462>R464, R468, R469, R476>R479, R504>R507, R510	SMT 100K Ω Res.
	55	9	110-0069-00	Q1-Q8, Q10	2N3904, Transistor
ICs / RAMs / ROMs / EPROMs	56	1		U402	**ATMEL**, AT91R40008
	57	1		U8	**ATMEL**, AT49BV1614
	58	1		U414	**XILINX®**, XC9572XL
	59	1	(See Pg. **DR.** ❶ Table)	U7	**512K EPROM** Sound (27512)
	60	1	(See Pg. **DR.** ❶ Table)	U210 *(32-Pin, IC Socket, 077-5217-00)*	**1MB EPROM** CPU Game (27C040)
	61	4	(See Pg. **DR.** ❶ Table)	U17, U21, U36, U37 *(32-Pin, IC Socket, 077-5217-00)*	**8MB EPROM** Voice 1-4 (M27C0400I-12FI)
	62	1	965-6504-00	U213 (**BLUE DOT**)	**PAL16V8Q (Programmed) BLUE DOT**
	63	1	105-5046-00	U212 *(28-Pin, IC Dip Socket, 077-5208-00)*	6264/MS62256 (MS6264A) (28-Pin)
	64	1	100-0189-01	U209 *(40-Pin, IC Socket, 077-5209-00)*	68B09E (40-Pin)
	65	2	100-5015-00	U215, U216	74AHCT74 (14-Pin)
	66	8	100-0338-00	U202, U204, U205, U206, U207, U208, U403, U404 (U200: NS)	74HC245 (20-Pin)
	67	2	100-5012-00	U201, U203	74HCT273 (20-Pin)
	68	1	100-0037-00	U407	74LS74 (14-Pin)
	69	1	100-0148-00	U214	74LS138 (16-Pin)
	70	1	100-0064-00	U211	74LS374 (20-Pin)
	71	1		U406	3.3v Watchdog, DS1233 (3-Pin)
	72	1	100-5023-00	U413	5.0v Watchdog, DS1232 (8-Pin)
	73	1		U219	1.8v Volt. Regulator LT1503 (8-Pin)
	74	1		U405	3.3v Volt. Regulator LT1086 (3-Pin)
	75	1	124-5002-00	VR1	-5v Regulator, LM7905CT
	76	1	124-5001-00	VR2	+5v Regulator, LM7805CT
	77	2	100-0377-00	U400, U401	LM339AN (14-Pin)
	78	1	100-0375-00	U30	LM833 (8-Pin)
	79	1	100-5018-00	U26	TDA1543 (8-Pin)
Miscellaneous	80	2	100-5016-20	U101, U102 (U100: NS)	TDA2030A (5-Pin)
	81	1	140-0040-00	Y1	40MHz Clock PLE SQ3300S
	82	1	181-5002-00	SW300	Dip Switch 8-Pos., (KSD08H Black)
	83		n/a	FB1>FB6	Ferrite Bead
	84		535-5000-10	HS2, HS3, (HS1: NS) *(over U101, U102)*	Heat Sink (AAVID 531102)
	85	1		S2 (Reset)	Push-Button Switch (B3F4000)
	86	1	545-5685-00	BAT1 HOLDER ***(Always replace all 3, Size AA 1.5v Cells, with new ones, when required)***	

Test Point Wire (24ga.) Loops:
VBATT, GND *(near CN7)*,
GND *(near CN9)*, GND *(near L200)*,
GND_SIGNAL *(near U405)*

Test Point Pads:
TP1>TP5, TP7, TP8, TP11,
TP12, TP16, TP17, TP20

* Surface Mounts (SMT) are not listed.

* Surface Mounts (SMT) are not listed.

If a part is required where a part number is not provided, call Tech. Support (see back of cover).

Playfield Switch Single OPTO Transmitter & Receiver Boards Schematic

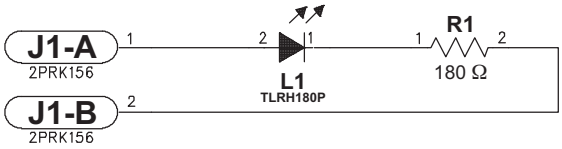

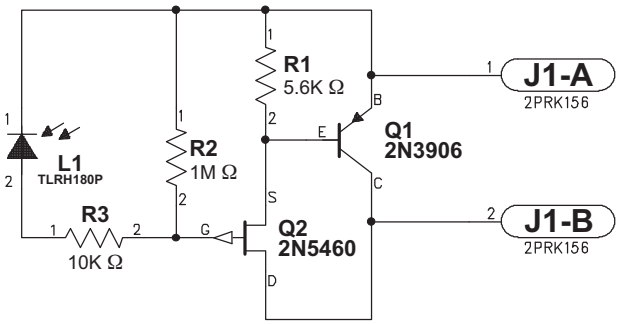

Single OPTO Transmitter
515-7307-00

Single OPTO Receiver
515-7308-00

Playfield Switch Single OPTO Trans. & Rec. Boards Component Layout & Parts

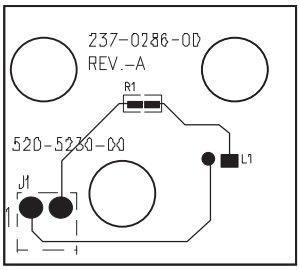

Front Side
(LED & 2-Pin Connector)

515-7307-00 (TRANS)

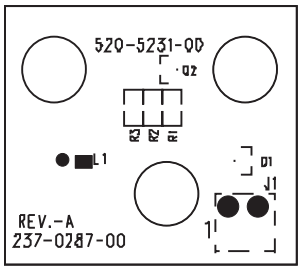

Front Side
(LED & 2-Pin Connector)

515-7308-00 (REC)

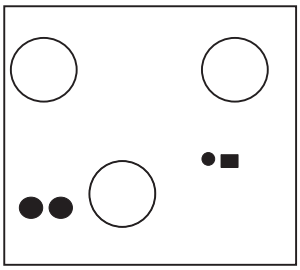

Back Side
(Solder / SMTs)

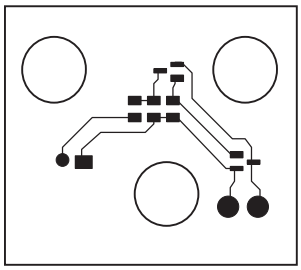

Back Side
(Solder / SMTs)

ITEM	QTY	PART NUMBER	REF-DESIGNATOR	DESCRIPTION
A	**1**	**515-7307-00**	**Single OPTO Trans. Bd. Assy.**	**PCB Assy.** (with all **Items 1-5**)
—	**1**	**520-5230-00**	**Single OPTO Trans. Board**	**PCB Assy.** (with Items **1-3** only)
01	1	045-5111-02	J1	2X, .156" Rt. Angle (26-60-5020) Conn.
02	**1**	**165-5052-00**	**L1**	**LED TLRH180P** (**Ultra Bright Red**)
03	1	121-5067-00	R1	SMT 180 Ω 1/8W Chip Res. (CRCW)
04	3	530-5308-02	n/a	OPTO PCB Brass Tube Spacer
05	3	545-5518-00	n/a	OPTO PCB Rubber Grommet
B	**1**	**515-7308-00**	**Single OPTO Rec. Bd. Assy.**	**PCB Assy.** (with all **Items 1-9**)
—	**1**	**520-5231-00**	**Single OPTO Rec. Board**	**PCB Assy.** (with **Items 1-7** only)
01	1	045-5111-02	J1	2X, .156" Rt. Angle (26-60-5030) Conn.
02	**1**	**165-5052-00**	**L1**	**LED TLRH180P** (**Ultra Bright Red**)
03	1	110-5006-00	Q1	2N3906, Transistor (P-FET SOT-23)
04	1	110-0086-00	Q2	2N5460, Transistor
05	1		R1	SMT 5.6K Ω 1/8W Chip Res. (CRCW)
06	1		R2	SMT 1M Ω 1/8W Chip Res. (CRCW)
07	1	121-5011-00	R3	SMT 10K Ω 1/8W Chip Res. (CRCW)
08	3	530-5308-02	n/a	OPTO PCB Brass Tube Spacer
09	3	545-5518-00	n/a	OPTO PCB Rubber Grommet

Replacement Part:
LED TLRH180P
(T1-3/4 GaAlAs)
SPI Part №:
165-5052-00

If a part is required where a part number is not provided, call Tech. Support (see back of cover).

Back Panel Switch Mini OPTO Transmitter & Receiver Boards Schematic, Component Layout & Parts

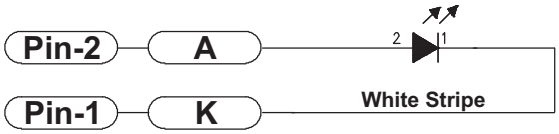

Mini PCB OPTO 12" Lead (White Bracket) 500-6746-00

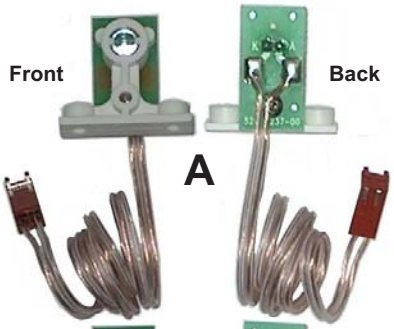

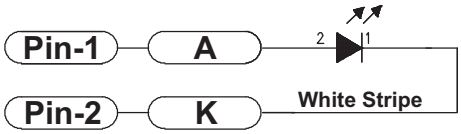

Mini PCB OPTO 6" Lead (Black Bracket) 500-6747-00

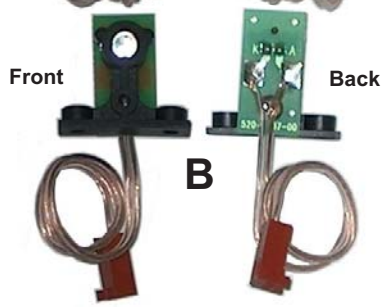

ITEM	QTY	PART NUMBER	REF-DESIGNATOR	DESCRIPTION
A	**1**	**500-6746-00**	**MINI PCB OPTO ASM WHT / 12" LEAD**	**PCB Assy.** (with all **Items 1-5**)
—	**1**	520-5237-00	**Mini OPTO Trans. or Rec. Board**	**PCB Only Plain**
01	1	545-6092-01		White Bracket (Plastic) Holder
02	1	237-5909-00		#4-40 X 1/4 PPH Screw
03	**1**	**165-5052-00**		**LED** (**Ultra Bright Red**)
04	1	601-5023-12	K, A	12" Speaker Wire (1-Side White Stripe)
05	1	045-5020-02	*Note White Strip to Pin-1*	2-Pin Cn., .100 **KK Cmp Trm** Molex 08-50-0113
B	**1**	**500-6747-00**	**MINI PCB OPTO ASM BLK / 6" LEAD**	**PCB Assy.** (with all **Items 1-5**)
—	**1**	520-5237-00	**Mini OPTO Trans. or Rec. Board**	**PCB Only Plain**
01	1	045-6092-00		Black Bracket (Plastic) Holder
02	1	237-5909-00		#4-40 X 1/4 PPH Screw
03	**1**	**165-5052-00**		**LED** (**Ultra Bright Red**)
04	1	601-5023-06	K, A	6" Speaker Wire (1-Side White Stripe)
05	1	045-5020-02	*Note White Strip to Pin-2*	2-Pin Cn., .100 **KK Cmp Trm** Molex 08-50-0113

Back Panel OPTO Transmitter / Receiver Amplifier Bd. Component Layout & Parts

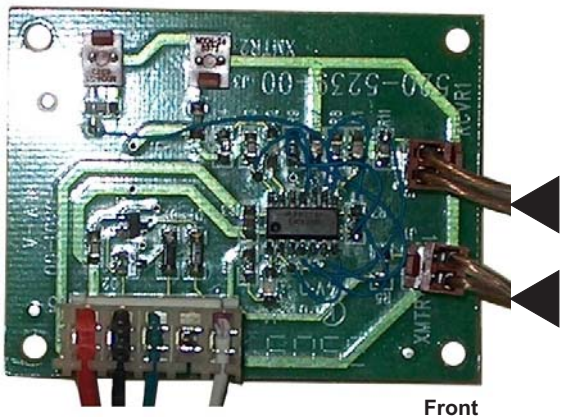

Front

OPTO Transmitter / Receiver Amplifier PCB 520-5239-00

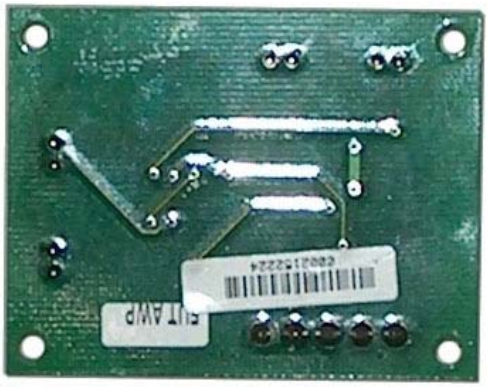

Back

ITEM	QTY	PART NUMBER	REF-DESIGNATOR	DESCRIPTION
—	**1**	**520-5239-00**	**OPTO Transmitter/Receiver Amplifier Board**	**Complete PCB Assembly**
01	1		R7	SMT 150K Ω 1/10W Resistor 805, 5%
02	2		R5, R6	SMT 180 Ω 1/10W Resistor 805, 5%
03	1		R9	SMT 180K Ω 1/10W Resistor 805, 5%
04	4		R1, R3, R12, R13	SMT 1K Ω 1/10W Resistor 805, 5%
05	2		R10, R11	SMT 1M Ω 1/10W Resistor 805, 5%
06	2		R2, R4	SMT 470 Ω 1/10W Resistor 805, 5%
07	1		R8	SMT 6.8K Ω 1/10W Resistor 805, 5%
08	3		C1, C2, C3	SMT Cer. .1uF 50v Cap., 10% X7R
09	2		D1, D2	1N4148W, Diode, 100v, 350MW
10	2		Q1, Q2	MMST3904, NPN, 40v, .02A
11	1		U1	LM339M, Low Power Offset QUA
12	4	Mfg. 22-23-2021	J1, J2, J3, J4	2-Pin, 0.1 Header (1 Row, VT, Tin)
13	1	Mfg. 640445-5	J5	5-Pin, .156 Header (1 Row, VT, Tin)
14	2	Mfg. **APT3216SURC**	L1, L2	LEDD-SMT, Red 1206
15	4		n/a	**Spacer (Nylon), .153" ID X 9/32" OD X 3/8"**

Playfield 19-LED PC Board Component Layout

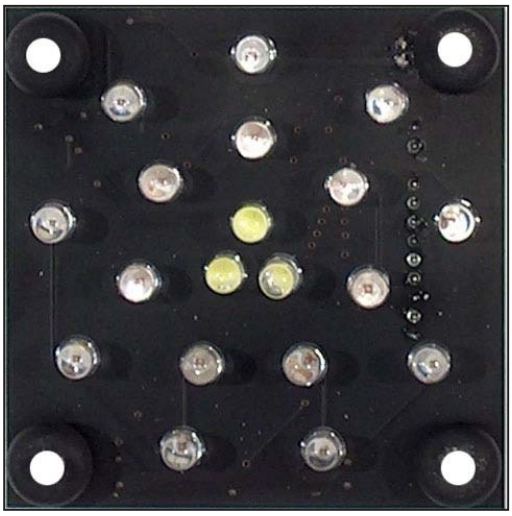

Front

19-LED PCB
520-5242-00

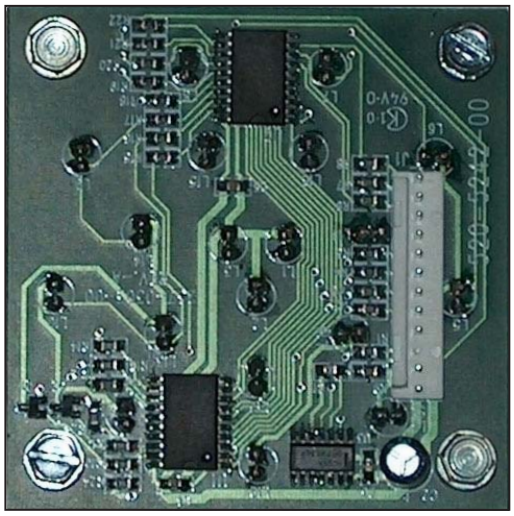

Back

Front

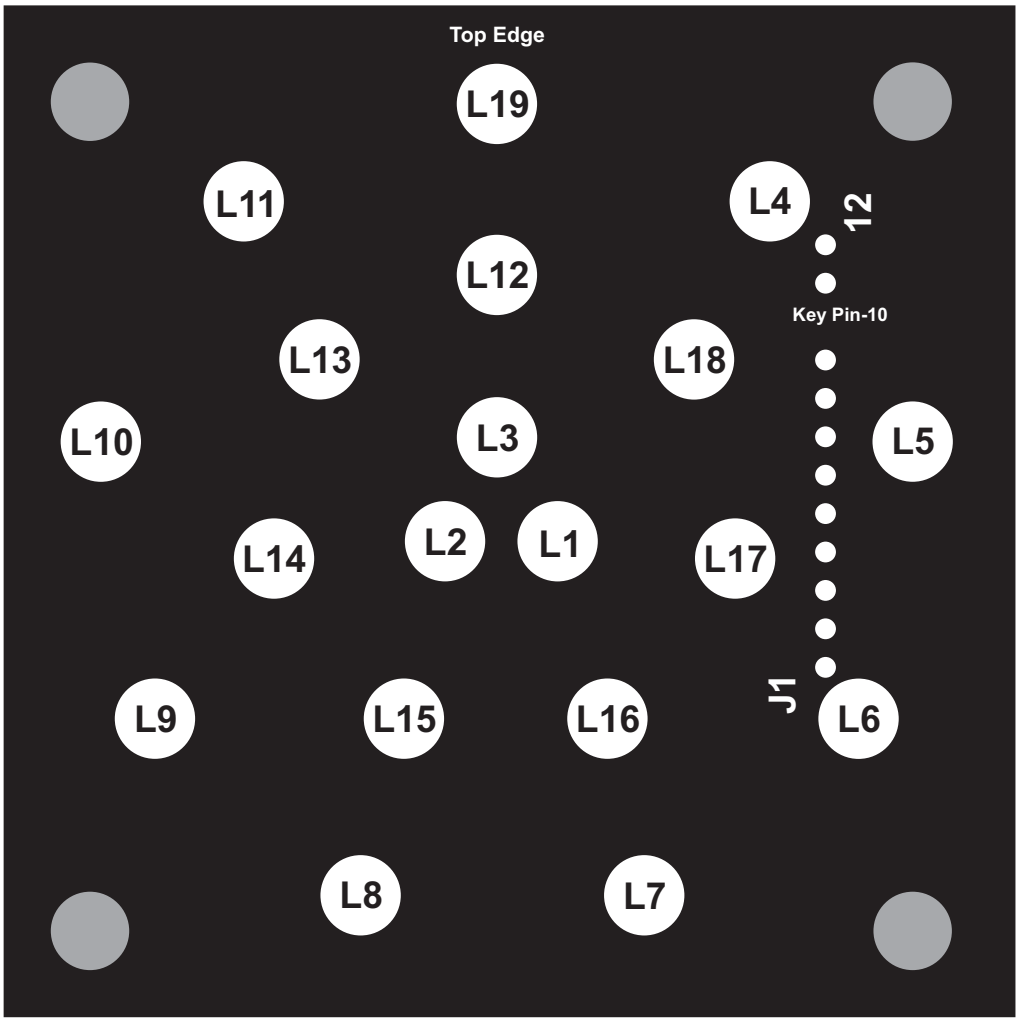

For Wiring, see Pages 146 or 147.

ITEM	QTY	PART NUMBER	REF-DESIGNATOR	DESCRIPTION
—	1	520-5242-00	Playfield 19-LED PC Board	Complete PCB Assembly

UK & Special App. 3X Transistor Driver Bd. Schematic

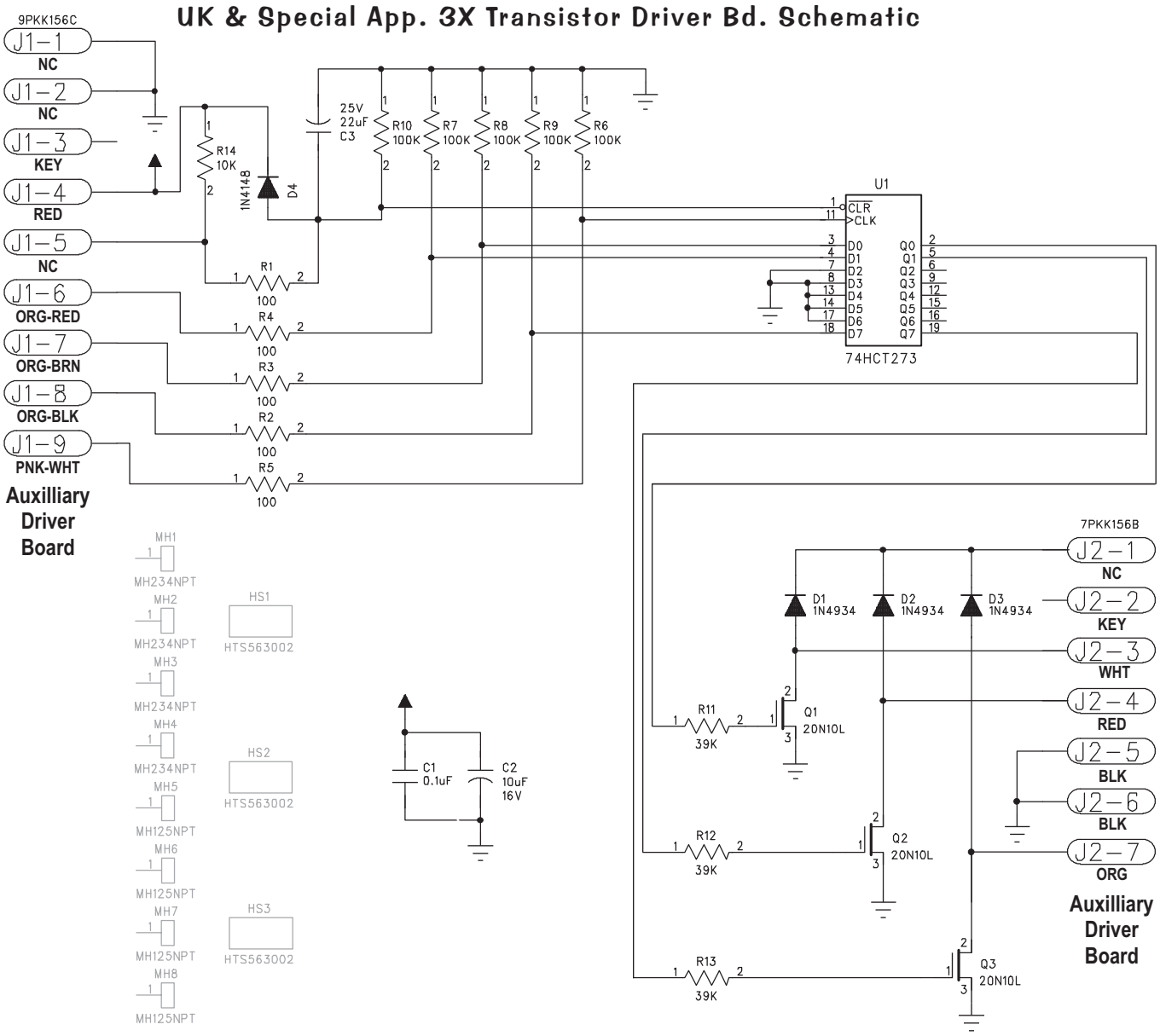

UK & Special App. 3X Transistor Driver Bd. Component Layout (Sol. Exp. Bd.)

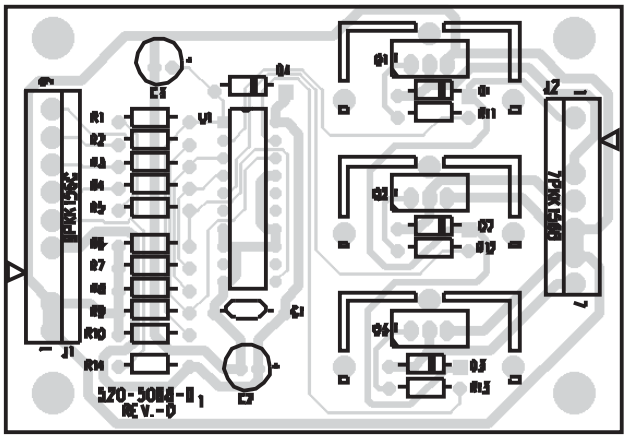

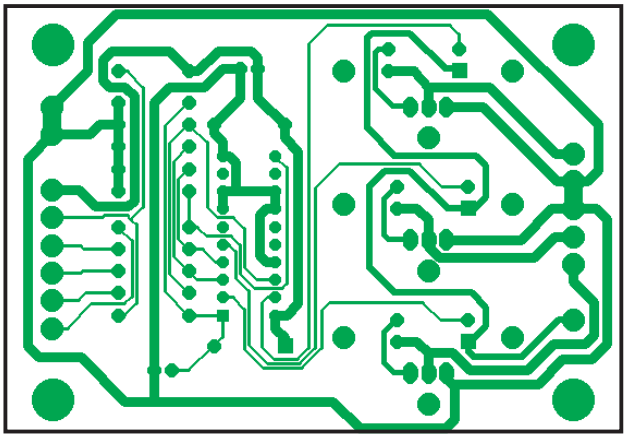

ITEM	QTY	PART NUMBER	REF-DESIGNATOR	DESCRIPTION
—	1	520-5068-01	Solenoid Expander (x3 Transistor) PC Board	Complete PCB Assembly

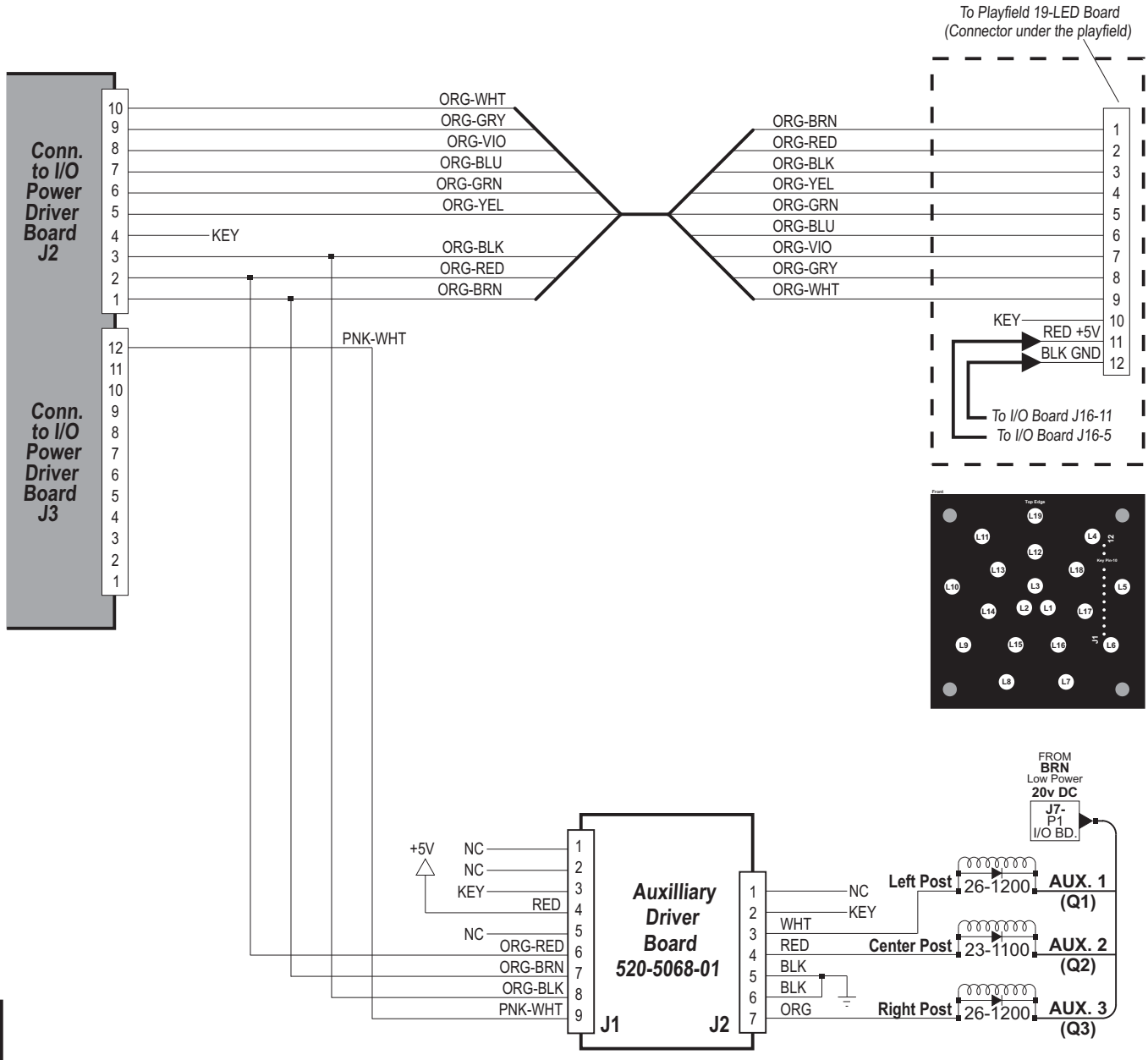
To Playfield 19-LED Board
(Connector under the playfield)
Conn. to I/O Power Driver Board J2
Conn. to I/O Power Driver Board J3
ORG-WHT
ORG-GRY
ORG-VIO
ORG-BLU
ORG-GRN
ORG-YEL
KEY
ORG-BLK
ORG-RED
ORG-BRN
PNK-WHT
ORG-BRN
ORG-RED
ORG-BLK
ORG-YEL
ORG-GRN
ORG-BLU
ORG-VIO
ORG-GRY
ORG-WHT
KEY
RED +5V
BLK GND
To I/O Board J16-11
To I/O Board J16-5
+5V
NC
NC
KEY
RED
NC
ORG-RED
ORG-BRN
ORG-BLK
PNK-WHT
Auxilliary Driver Board 520-5068-01
J1
J2
NC
KEY
WHT
RED
BLK
BLK
ORG
FROM BRN Low Power 20v DC
J7-P1 I/O BD.
Left Post
26-1200
AUX. 1 (Q1)
Center Post
23-1100
AUX. 2 (Q2)
Right Post
26-1200
AUX. 3 (Q3)

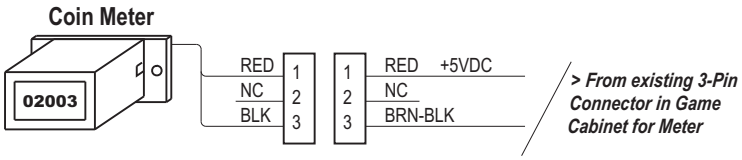
Coin Meter
02003
RED
NC
BLK
RED +5VDC
NC
BRN-BLK
> From existing 3-Pin Connector in Game Cabinet for Meter

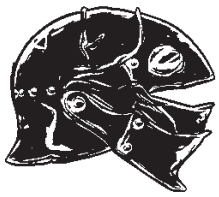

UK 3X Transistor Driver Board for Up-Posts & Playfield 19-LED Overview & Wiring with the Tournament Serial Interface (TSI) Board

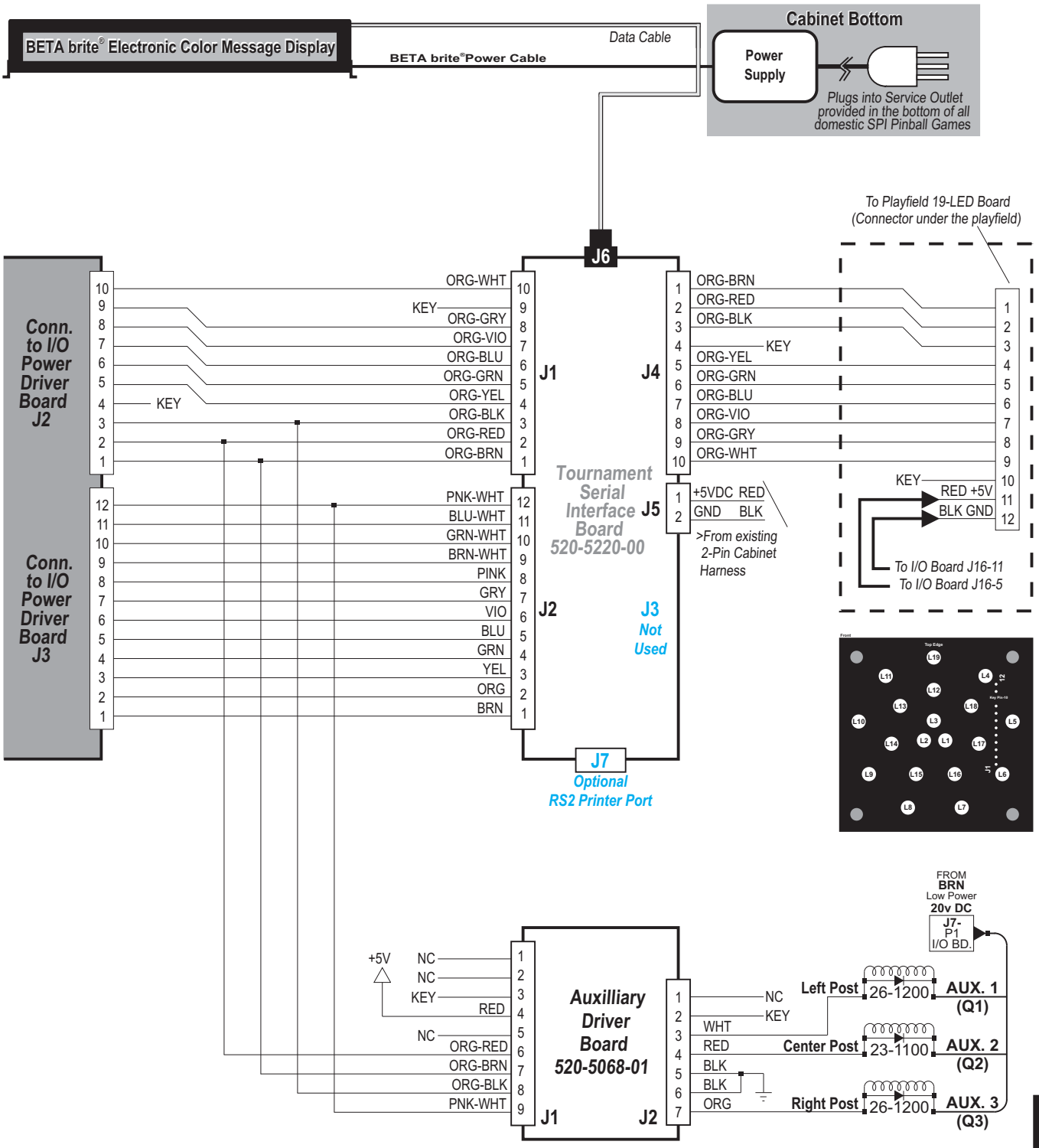

Order the Optional ToPS™ (Tournament Pinball System) Kit!
Call Technical Support at 1-800-542-5377 for more information

Tournament Serial Interface Board Schematic (Sheet 1 of 1)

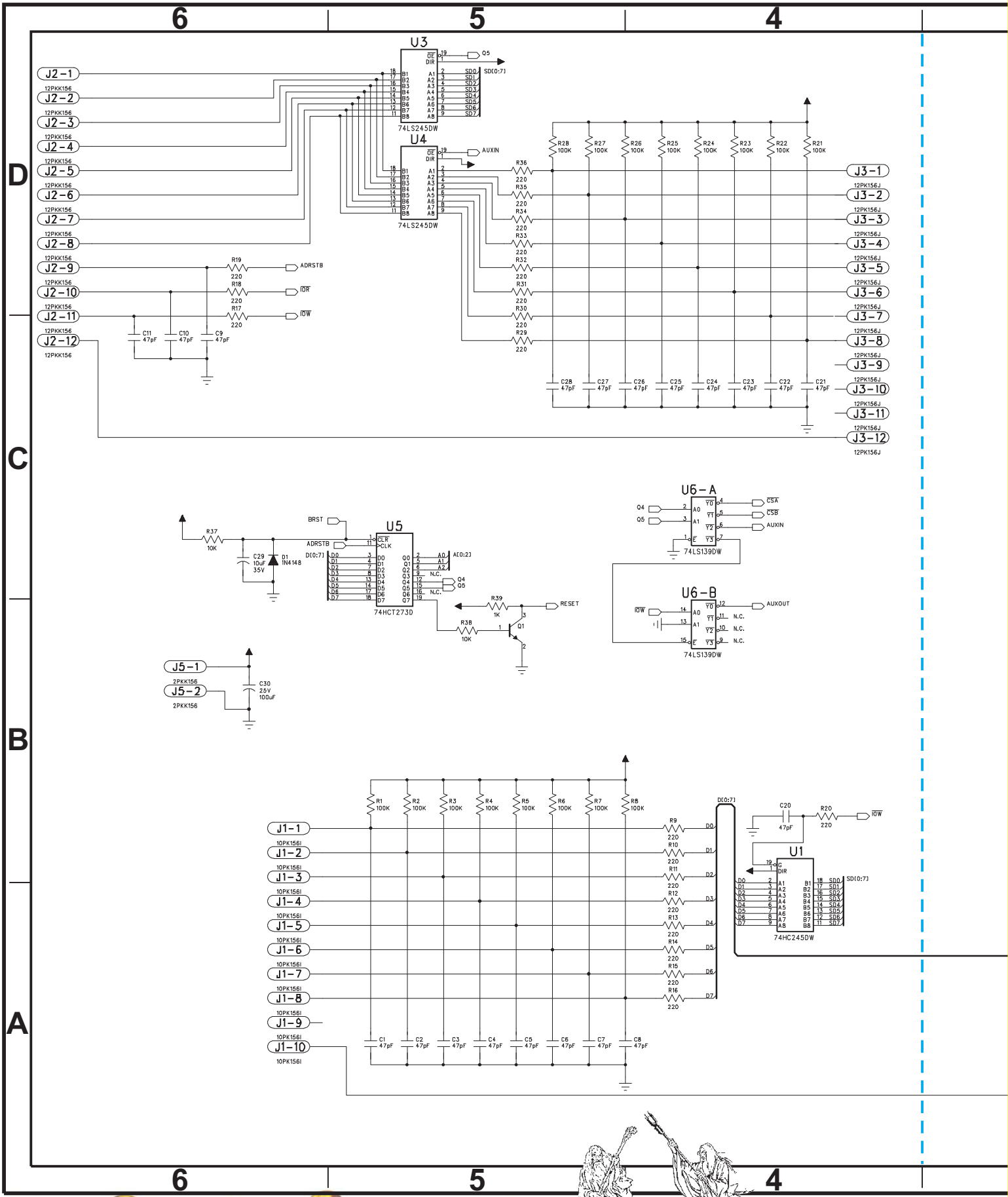

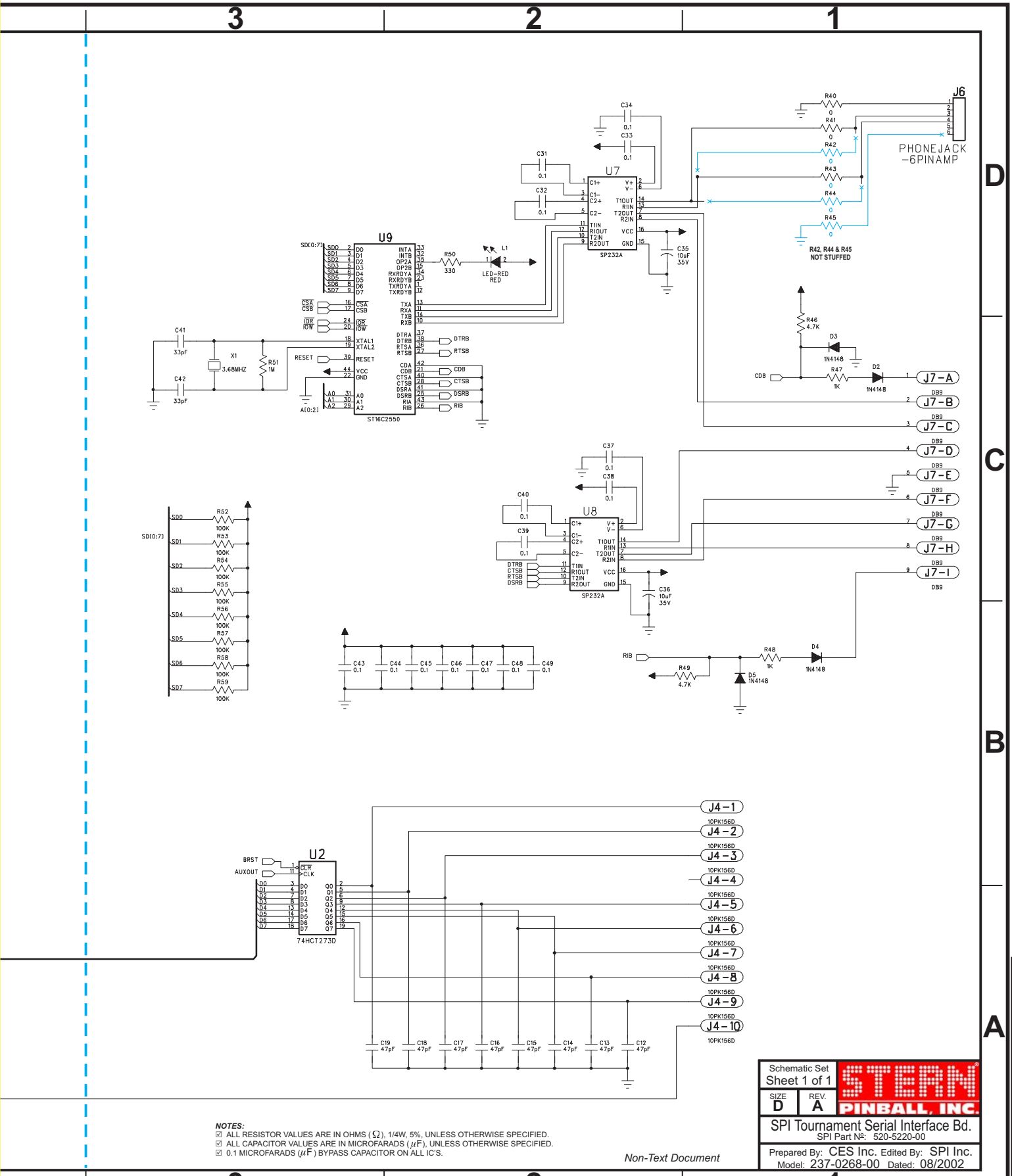

NOTES:

- ☑ ALL RESISTOR VALUES ARE IN OHMS (Ω), 1/4W, 5%, UNLESS OTHERWISE SPECIFIED.
- ☑ ALL CAPACITOR VALUES ARE IN MICROFARADS (μF), UNLESS OTHERWISE SPECIFIED.
- ☑ 0.1 MICROFARADS (μF) BYPASS CAPACITOR ON ALL IC'S.

Tournament Serial Interface Board Component Layout

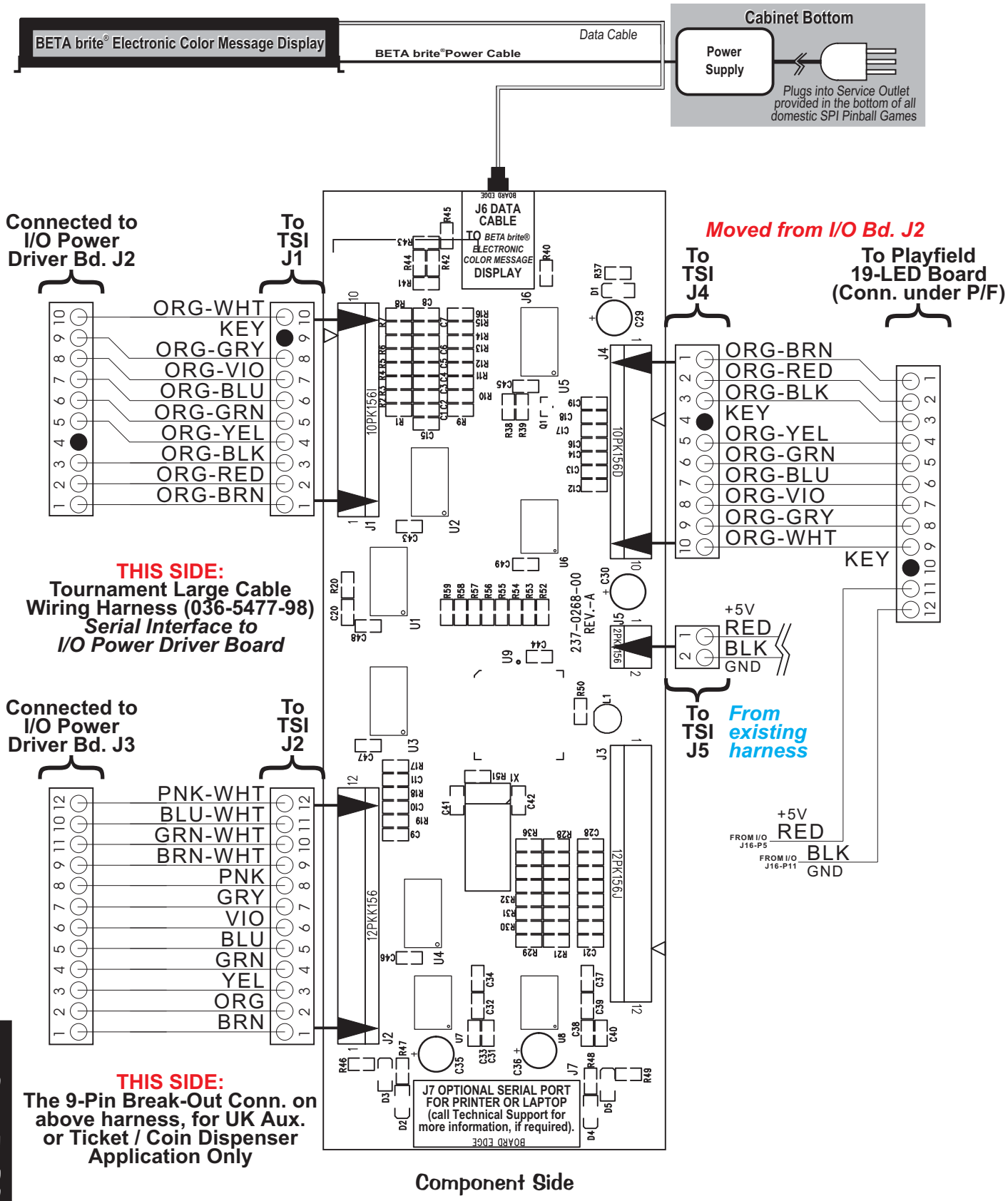

ITEM	QTY	PART NUMBER	REF-DESIGNATOR	DESCRIPTION
--	1	520-5220-00	Tournament Serial Interface (TSI) Board	PCB Assembly

Appendixes A through J

Table of Contents for Appendixes

- **Appendix A : Pinball Game Firmware Table A1-A2**
  - ▶ **[White Star Board System and S.A.M. System Only*]**
    - ▷ ... describes the ROM / Chip Size / Program & Raw Part Number / USA Version / Check Sum and CPU/Sound PCB I & II ROM locations for Games Apollo 13 — Grand Prix (White Star Games); World Poker Tour – current (S.A.M. Games).
- **Appendix B : Semi-Conductors / I.C.'s / Relays Cross-Reference Table B1**
  - ▷ ...describes diodes and transistors with Source Number, SPI Part Number, NTE Number, ECG Number, Radio Shack Number & RCA Part Number *(If applicable).*
- **Appendix C : Production Start Date, Manual Part N°, ROM Size & Positions and Jumper W6 .. C1**
  - ▶ **[White Star Board System and S.A.M. System Only*]**
    - ▷ ...provides the Production Start Date, Manual Part Number, ROM Position(s), and Jumpers Installed for Games Apollo 13 — Grand Prix (White Star Games); World Poker Tour – current (S.A.M. Games).
- **Appendix D : Board Type Table D1-D2**
  - ▶ **[White Star Board System and S.A.M. System Only*]**
    - ▷ ...provides the Flipper**, I/O Power Driver, CPU/Sound, Display Power Supply, Dot Matrix Display, Display Controller, OPTOs and Misc. Board Part Numbers for Games Apollo 13 — Grand Prix (White Star Games); World Poker Tour – current (S.A.M. Games). ***Flipper Bd. with White Star Bd. System for A13 & Golden Eye only.)*
- **Appendix E : Generic Coil Cross-Reference Guide & Flipper Coil Table E1-E2**
  - ▶ **[White Star Board System and S.A.M. System Only*]**
    - ▷ ...provides the Coils used with Part Number and Gauge-Turns *(of the coil)* for Games Apollo 13 — Grand Prix (White Star Games); World Poker Tour – current (S.A.M. Games).
- **Appendix F : Motor Specification Table F1-F2**
  - ▶ **[White Star Board System and S.A.M. System Only*]**
    - ▷ ...provides all the Motor Function, Specifications and Part Number for Games Apollo 13 — Grand Prix (White Star Games); World Poker Tour – current (S.A.M. Games)..
- **Appendix G : Part Number Prefix Classification Codes G1**
  - ▷ ...explains how our Part Numbers are developed to help sort parts easier.
- **Appendix H : Playfield Inserts (Plastic Light Covers) H1**
  - ▷ ...gives a pictoral view with the name and Part Nr. of all the inserts used *(with Color Code Chart).*
- **Appendix I : Stand-Up Targets & Modular Stand-Up Targets I1-I2**
  - ▷ ...gives a pictoral view with the name and Part Number of all the Single Stand-Up Targets used *(with Color Code Chart).*
- **Appendix J : Coin Cards (USA & International) J1**
  - ▷ ...gives a pictoral view with the name and Part Number of all the current Coin Cards for USA, Canada, Euro and other International Countries. *For all Coin Cards and/or free Coin Card files for download, visit our website : www.sternpinball.com*

APPENDIX A

Pinball Game Firmware (White Star Board System* Only) Table

See website for the latest International Code or Updated USA version / checksums

ROM	Chip Size	Program Part Nº	USA Ver. & Check Sum	Bd. Loc.	Raw Part Nº
Apollo 13 (Note 1)					
Game ROM	(1M)	965-0208-00	**A5.01 | $09FF**	**U210**	960-5009-00
Sound	(512K)	965-0212-00	1.00 | $5244	U7	960-7001-02
Display	(4M)	965-0213-00	**A5.00 | $B92B**	**ROM 0**	960-5015-01
Voice 1	(4M)	965-0209-00	1.00 | $7FC7	U17	n/a (masked)
Voice 2	(4M)	965-0210-00	1.00 | $8E55	U21	n/a (masked)
Voice 3	(4M)	965-0211-00	1.00 | $08EE	U36	n/a (masked)
Golden Eye (Note 1)					
Game ROM	(1M)	965-0214-42	**A4.04 | $3FFF**	**U210**	960-5009-00
Sound	(512K)	965-0217-42	1.00 | $D615	U7	960-7001-02
Display	(4M)	965-0218-42	**A4.00 | $E6ED**	**ROM 0**	960-5015-01
Voice 1	(4M)	965-0215-42	1.00 | $3E32	U17	n/a (masked)
Voice 2	(4M)	965-0216-42	1.00 | $71F0	U21	n/a (masked)
Twister (Note 2)					
Game ROM	(1M)	965-0219-41	**A4.05 | $E9FF**	**U210**	960-5009-00
Sound	(512K)	965-0221-41	1.00 | $1FFF	U7	960-7001-02
Display	(4M)	965-0222-41	**A4.00 | $FD01**	**ROM 0**	960-5015-01
Voice 1	(4M)	965-0220-41	1.00 | $3650	U17	960-5015-01
Voice 2	(4M)	965-0223-41	1.00 | $9300	U21	960-5015-01
ID4: Independence Day (Note 2)					
Game ROM	(1M)	965-0224-45	**A2.02 | $9CFF**	**U210**	960-5009-00
Sound	(512K)	965-0227-45	1.00 | $222B	U7	960-7001-02
Display	(4M)	965-0228-45	**A2.00 | $ABF7**	**ROM 0**	960-5015-01
Voice 1	(4M)	965-0225-45	1.00 | $3AE1	U17	960-5015-01
Voice 2	(4M)	965-0226-45	1.00 | $206E	U21	960-5015-01
Space Jam (Note 2)					
Game ROM	(1M)	965-0229-43	**A3.00 | $E6FF**	**U210**	960-5009-00
Sound	(512K)	965-0233-43	1.00 | $F1E7	U7	960-7001-02
Display	(4M)	965-0234-43	**A3.00 | $0057**	**ROM 0**	960-5015-01
Voice 1	(4M)	965-0230-43	1.00 | $DBA8	U17	960-5015-01
Voice 2	(4M)	965-0231-43	1.00 | $DDF1	U21	960-5015-01
Voice 3	(4M)	965-0232-43	1.00 | $F32A	U36	960-5015-01
The Star Wars Trilogy - Special Edition (S.E.) (Note 2)					
Game ROM	(1M)	965-0235-56	**A4.03 | $5EFF**	**U210**	960-5009-00
Sound	(512K)	965-0238-56	1.00 | $4A7D	U7	960-7001-02
Display	(4M)	965-0239-56	**A4.00 | $8817**	**ROM 0**	960-5015-01
Voice 1	(4M)	965-0236-56	1.00 | $E66B	U17	960-5015-01
Voice 2	(4M)	965-0237-56	1.00 | $8F54	U21	960-5015-01
The Lost World: Jurassic Park (Note 2)					
Game ROM	(1M)	965-0240-53	**A2.02 | $C8FF**	**U210**	960-5009-00
Sound	(512K)	965-0243-53	1.00 | $A35B	U7	960-7001-02
Display	(4M)	965-0244-53	**A2.01 | $7F46**	**ROM 0**	960-5015-01
Voice 1	(4M)	965-0241-53	1.00 | $1D27	U17	960-5015-01
Voice 2	(4M)	965-0242-53	1.00 | $8DA4	U21	960-5015-01
The X-Files (Note 2)					
Game ROM	(1M)	965-0245-46	**A3.03 | $A2FF**	**U210**	960-5009-00
Sound	(512K)	965-0248-46	1.00 | $6648	U7	960-7001-02
Display	(4M)	965-0249-46	**A3.00 | $66D0**	**ROM 0**	960-5015-01
Voice 1	(4M)	965-0246-46	1.00 | $349D	U17	960-5015-01
Voice 2	(4M)	965-0247-46	1.00 | $629C	U21	960-5015-01
Starship Troopers (Note 3)					
Game ROM	(1M)	965-0250-59	**A2.00 | $85FF**	**U210**	960-5009-00
Sound	(512K)	965-0253-59	1.00 | $64B2	U7	960-7001-02
Display	(4M)	965-0254-59	**A2.00 | $E77B**	**ROM 0**	960-5015-01
Voice 1	(4M)	965-0251-59	1.00 | $152A	U17	960-5015-01
Voice 2	(4M)	965-0252-59	1.00 | $0291	U21	960-5015-01
Voice 3	(4M)	965-0255-59	1.00 | $95A7	U36	960-5015-01
Viper Night Drivin' (Note 4)					
Game ROM	(1M)	965-0266-35	**A2.01 | $C5FF**	**U210**	960-5009-00
Sound	(512K)	965-0271-35	1.00 | $4DF8	U7	960-7001-02
Display	(4M)	965-0272-35	**A2.01 | $C17D**	**ROM 0**	960-5015-01
Voice 1	(4M)	965-0267-35	1.00 | $8018	U17	960-5015-01
Voice 2	(4M)	965-0268-35	1.00 | $2157	U21	960-5015-01
Voice 3	(4M)	965-0269-35	1.00 | $B5A6	U36	960-5015-01
Voice 4	(4M)	965-0270-35	1.00 | $D01E	U37	960-5015-01
Lost In Space (Note 4)					
Game ROM	(1M)	965-0282-60	**A1.01 | $B2FF**	**U210**	960-5009-00
Sound	(512K)	965-0287-60	1.00 | $A6AF	U7	960-7001-02
Display	(4M)	965-0288-60	**A1.02 | $32AB**	**ROM 0**	960-5015-01
Voice 1	(4M)	965-0283-60	1.00 | $4391	U17	960-5015-01
Voice 2	(4M)	965-0284-60	1.00 | $8215	U21	960-5015-01
Voice 3	(4M)	965-0285-60	1.00 | $5B32	U36	960-5015-01
Voice 4	(4M)	965-0286-60	1.00 | $8971	U37	960-5015-01
Godzilla (Note 4)					
Game ROM	(1M)	965-0289-40	**A2.05| $B1FF**	**U210**	960-5009-00
Sound	(512K)	965-0294-40	1.00 | $0CC8	U7	960-7001-02
Display	(4M)	965-0295-40	**A2.00 | $C929**	**ROM 0**	960-5015-01
Voice 1	(4M)	965-0290-40	1.00 | $0D75	U17	960-5015-01
Voice 2	(4M)	965-0291-40	1.00 | $CCCF	U21	960-5015-01
Voice 3	(4M)	965-0292-40	1.00 | $227F	U36	960-5015-01
Voice 4	(4M)	965-0293-40	1.00 | $DB69	U37	960-5015-01
South Park (Notes 4, 5)					
Game ROM	(1M)	965-0301-71	**A1.03 | $58FF**	**U210**	960-5009-00
Sound	(512K)	965-0306-71	1.00 | $1286	U7	960-7001-02
Display	(4M)	965-0307-71	**A1.01 | $166F**	**ROM 0**	960-5015-01
Voice 1	(8M)	965-0302-71	1.00 | $7BF8	U17	960-5016-00
Voice 2	(8M)	965-0303-71	1.00 | $9CCC	U21	960-5016-00
Voice 3	(8M)	965-0304-71	1.00 | $ADD9	U36	960-5016-00
Voice 4	(8M)	965-0305-71	1.00 | $6659	U37	960-5016-00
Harley-Davidson® (Notes 4, 5, 6) *Original (1999-2001)*					
Game ROM	(1M)	965-0319-67	**A1.03 | $3EFF**	**U210**	960-5009-00
Sound	(512K)	965-0320-67	1.00 | $F4FF	U7	960-7001-02
Display	(4M)	965-0321-67	**A1.04 | $FC7C**	**ROM 0**	960-5015-01
Voice 1	(8M)	965-0322-67	1.00 | $CD26	U17	960-5016-00
Voice 2	(8M)	965-0323-67	1.00 | $9396	U21	960-5016-00
Voice 3	(8M)	965-0324-67	1.00 | $FB72	U36	960-5016-00
Voice 4	(4M)	965-0325-67	1.00 | $6100	U37	960-5015-01
▶ **Harley-Davidson® (Notes 4, 5, 6, 8) *2nd Edition (2002-2003)***					
Game ROM	(1M)	965-0319-67**A**	**A1.08 | $23FF**	**U210**	960-5009-00
Display	(4M)	965-0321-67**A**	**A1.05 | $B594**	**ROM 0**	960-5015-01
▶ **Harley-Davidson® (Notes 4, 5, 6, 8) *3rd Edition (2004)***					
Game ROM	(1M)	965-0319-87	**A4.00 | $1CFF**	**U210**	960-5009-00
Display	(4M)	965-0321-87	**A4.00 | $F4FF**	**U5**	960-5015-01
Striker Xtreme (Notes 4, 5)					
Game ROM	(1M)	965-0326-68	**A1.03 | $E4FF**	**U210**	960-5009-00
Sound	(512K)	965-0327-68	1.00 | $3BCA	U7	960-7001-02
Display	(4M)	965-0328-68	**A1.03 | $1957**	**ROM 0**	960-5015-01
Voice 1	(8M)	965-0329-68	1.00 | $482A	U17	960-5016-00
Voice 2	(8M)	965-0330-68	1.00 | $7312	U21	960-5016-00
Voice 3	(8M)	965-0331-68	1.00 | $DE2F	U36	960-5016-00
Voice 4	(8M)	965-0332-68	1.00 | $C508	U37	960-5016-00
NFL (Notes 4, 5) *Not on CD-R or Website: Code through Distributor Only.*					
Game ROM	(1M)	965-0339-73	**A1.00 | $D2FF**	**U210**	960-5009-00
Sound	(512K)	965-0340-73	1.00 | $	U7	960-7001-02
Display	(4M)	965-0341-73	**A1.01 | $845A**	**ROM 0**	960-5015-01
Voice 1	(8M)	965-0342-73	1.00 | $	U17	960-5016-00
Voice 2	(8M)	965-0343-73	1.00 | $	U21	960-5016-00
Voice 3	(8M)	965-0344-73	1.00 | $	U36	960-5016-00
Voice 4	(8M)	965-0345-73	1.00 | $	U37	960-5016-00
Sharkey's Shootout (Notes 4, 5)					
Game ROM	(1M)	965-0333-72	**A2.11 | $49FF**	**U210**	960-5009-00
Sound	(512K)	965-0334-72	1.01 | $9796	U7	960-7001-02
Display	(4M)	965-0335-72	**A2.01 | $6C33**	**ROM 0**	960-5015-01
Voice 1	(8M)	965-0336-72	1.00 | $58EA	U17	960-5016-00
Voice 2	(8M)	965-0337-72	1.00 | $272B	U21	960-5016-00
Voice 3	(8M)	965-0338-72	1.00 | $41AE	U36	960-5016-00
High Roller Casino (Notes 4, 5)					
Game ROM	(1M)	965-0346-65	**A3.00 | $90FF**	**U210**	960-5009-00
Sound	(512K)	965-0347-65	1.00 | $581C	U7	960-7001-02
Display	(4M)	965-0348-65	**A3.00 | $74B3**	**ROM 0**	960-5015-01
Voice 1	(8M)	965-0349-65	1.00 | $E12D	U17	960-5016-00
Voice 2	(8M)	965-0350-65	1.00 | $38F4	U21	960-5016-00
Voice 3	(8M)	965-0351-65	1.00 | $1B54	U36	960-5016-00
Voice 4	(8M)	965-0352-65	1.00 | $D720	U37	960-5016-00
Austin Powers™ (Notes 4, 5)					
Game ROM	(1M)	965-0353-74	**A3.02 | $5DFF**	**U210**	960-5009-00
Sound	(512K)	965-0354-74	1.00 | $DA7B	U7	960-7001-02
Display	(4M)	965-0035-74	**A3.00 | $6A34**	**ROM 0**	960-5015-01
Voice 1	(8M)	965-0356-74	1.00 | $D2B9	U17	960-5016-00
Voice 2	(8M)	965-0357-74	1.00 | $9E75	U21	960-5016-00
Voice 3	(8M)	965-0358-74	1.00 | $51F3	U36	960-5016-00
Voice 4	(8M)	965-0359-74	1.00 | $0AE5	U37	960-5016-00
MONOPOLY® (Notes 4, 5)					
Game ROM	(1M)	965-0360-75	**A3.20 | $07FF**	**U210**	960-5009-00
Sound	(512K)	965-0361-75	1.00 | $8C18	U7	960-7001-02
Display	(4M)	965-0362-75	**A3.01 | $A381**	**ROM 0**	960-5015-01
Voice 1	(8M)	965-0363-75	1.00 | $35E6	U17	960-5016-00
Voice 2	(8M)	965-0364-75	1.00 | $B35A	U21	960-5016-00
Voice 3	(8M)	965-0365-75	1.00 | $8A9F	U36	960-5016-00
Playboy (Notes 4, 5, 7)					
Game ROM	(1M)	965-0367-76	**A5.00 | $7DFF**	**U210**	960-5009-00
Sound	(512K)	965-0368-76	1.02 | $E7C2	U7	960-7001-02
Display	(4M)	965-0369-76	**A5.00 | $A5FF**	**ROM 0**	960-5015-01
Voice 1	(8M)	965-0370-76	1.00 | $9ABE	U17	960-5016-00
Voice 2	(8M)	965-0371-76	1.00 | $9F34	U21	960-5016-00
Voice 3	(8M)	965-0372-76	1.00 | $374B	U36	960-5016-00
Voice 4	(8M)	965-0373-76	1.00 | $237A	U37	960-5016-00
RollerCoaster Tycoon™ (Notes 4, 5, 7)					
Sound	(512K)	965-0374-78	1.00 | $F663	U7	960-7001-02
Game ROM	(1M)	965-0375-78	**A7.02| $E5FF**	**U210**	960-5009-00
Voice 1	(8M)	965-0377-78	1.00 | $3C4A	U17	960-5016-00
Voice 2	(8M)	965-0378-78	1.00 | $057A	U21	960-5016-00
Voice 3	(8M)	965-0379-78	1.00 | $04D7	U36	960-5016-00
Display	(4M)	965-0376-78	**A7.01 | $8DDB**	**U5** Disp. Cntrlr.	
The Simpsons™ Pinball Party (Notes 4, 5, 7)					
Sound	(512K)	965-0381-77	1.01 | $A7EE	U7	960-7001-02
Game ROM	(1M)	965-0382-77	**A4.00 | $4FFF**	**U210**	960-5009-00
Voice 1	(8M)	965-0383-77	1.00 | $9719	U17	960-5016-00
Voice 2	(8M)	965-0384-77	1.00 | $16ED	U21	960-5016-00
Voice 3	(8M)	965-0385-77	1.00 | $ADCE	U36	960-5016-00
Voice 4	(8M)	965-0386-77	1.00 | $E7E5	U37	960-5016-00
Display	(4M)	965-0387-77	**A4.00 | $8A03**	**U5** DC PCB	960-5015-01
Terminator® 3: Rise of the Machines™ (Notes 4, 5, 7)					
Sound	(512K)	965-0388-79	1.00 | $D2FD	U7	960-7001-02
Game ROM	(1M)	965-0389-79	**A4.00 | $F8FF**	**U210**	960-5009-00
Voice 1	(8M)	965-0390-79	1.00 | $1838	U17	960-5016-00
Voice 2	(8M)	965-0391-79	1.00 | $F0D5	U21	960-5016-00
Voice 3	(8M)	965-0392-79	1.00 | $89DA	U36	960-5016-00
Voice 4	(8M)	965-0393-79	1.00 | $1200	U37	960-5016-00
Display	(4M)	965-0394-79	**A4.00 | $6E49**	**U5** DC PCB	960-5015-01
The Lord of the Rings™ (Notes 7, 8)					
Sound	(512K)	965-0401-80	1.01 | $36BC	U7	960-7001-02
Game ROM	(1M)	965-0402-80	**A10.00 | $84FF**	**U210**	960-5009-00
Voice 1	(8M)	965-0403-80	1.00 | $1792	U17	960-5016-00
Voice 2	(8M)	965-0404-80	1.00 | $67F1	U21	960-5016-00
Voice 3	(8M)	965-0405-80	1.00 | $89B6	U36	960-5016-00
Voice 4	(8M)	965-0406-80	1.00 | $EA49	U37	960-5016-00
Display	(4M)	965-0407-80	**A10.00 | $1669**	**U5** DC PCB	960-5015-01

Sound & Voice 1-4 identical to above H-D® Original.

footnotes : 1 — 8 *see the bottom of the next page (**A2**).*

APPENDIX A

Pinball Game Firmware (White Star Board System* & S.A.M. System** Only) Table

See website for the latest International Code or Updated USA version / checksums

Ripley's Believe It or Not!® (Notes 7, 8)

ROM	Chip Size	Program Part Nº	USA Ver. & Check Sum	Bd. Loc.	Raw Part Nº
Sound	(512K)	965-0408-81	1.00 | $D93D	U7	960-7001-02
Game ROM	(1M)	965-0409-81	**A3.20 | $43FF**	**U210**	960-5009-00
Voice 1	(8M)	965-0410-81	1.00 | $067B	U17	960-5016-00
Voice 2	(8M)	965-0411-81	1.00 | $C8B8	U21	960-5016-00
Voice 3	(8M)	965-0412-81	1.00 | $64C2	U36	960-5016-00
Voice 4	(8M)	965-0413-81	1.00 | $5341	U37	960-5016-00
Display	(4M)	965-0414-81	**A3.00 | $DE4B**	**U5** DC PCB	960-5015-01

Elvis® (Notes 7, 8)

Sound	(512K)	965-0415-84	1.00 | $8CD2	U7	960-7001-02
Game ROM	(1M)	965-0416-84	**A5.00 | $50FF**	**U210**	960-5009-00
Voice 1	(8M)	965-0417-84	1.00 | $538D	U17	960-5016-00
Voice 2	(8M)	965-0418-84	1.00 | $8BCD	U21	960-5016-00
Voice 3	(8M)	965-0419-84	1.00 | $60F8	U36	960-5016-00
Voice 4	(8M)	965-0420-84	1.00 | $14D8	U37	960-5016-00
Display	(4M)	965-0421-84	**A5.00 | $A1F6**	**U5** DC PCB	960-5015-01

The Sopranos℠ (Notes 7, 8)

Sound	(512K)	965-0422-85	4.00 | $9B5A	U7	960-7001-02
Game ROM	(1M)	965-0423-85	**A5.00 | $5BFF**	**U210**	960-5009-00
Voice 1	(8M)	965-0424-85	3.00 | $F01E	U17	960-5016-00
Voice 2	(8M)	965-0425-85	1.04 | $C14C	U21	960-5016-00
Voice 3	(8M)	965-0426-85	1.04 | $47A3	U36	960-5016-00
Voice 4	(8M)	965-0427-85	1.04 | $ADCD	U37	960-5016-00
Display	(4M)	965-0428-85	**A5.00 | $B4BB**	**U5** DC PCB	960-5015-01

NASCAR® (Notes 7, 8)

Sound	(512K)	965-0429-86	2.00 | $32B3	U7	960-7001-02
Game ROM	(1M)	965-0430-86	**A4.50 | $39FF**	**U210**	960-5009-00
Voice 1	(8M)	965-0431-86	2.00 | $CFFB	U17	960-5016-00
Voice 2	(8M)	965-0432-86	2.00 | $22C0	U21	960-5016-00
Voice 3	(8M)	965-0433-86	2.00 | $5FC8	U36	960-5016-00
Voice 4	(8M)	965-0434-86	2.00 | $2902	U37	960-5016-00
Display	(4M)	965-0435-86	**A4.00 | $92BD**	**U5** DC PCB	960-5015-01

Grand Prix (Notes 7, 8)

Sound	(512K)	965-0429-91	V1.00 | $6F89	U7	960-7001-02
Game ROM	(1M)	965-0430-91	**A4.50 | $5EFF**	**U210**	960-5009-00
Voice 1	(8M)	965-0431-91	1.00 | $CE0E	U17	960-5016-00
Voice 2	(8M)	965-0432-91	1.00 | $F4C6	U21	960-5016-00
Voice 3	(8M)	965-0433-91	1.00 | $057D	U36	960-5016-00
Voice 4	(8M)	965-0434-91	1.00 | $2646	U37	960-5016-00
Display	(4M)	965-0435-91	**A4.00 | $DA8E**	**U5** DC PCB	960-5015-01

[NDSE] (Notes 7, 8) *Call for more info if code update required.*

Sound	(512K)	965-0436-97	U7	960-7001-02
Game ROM	(1M)	965-0437-97	**U210**	960-5009-00
Voice 1	(8M)	965-0438-97	U17	960-5016-00
Voice 2	(8M)	965-0439-97	U21	960-5016-00
Voice 3	(8M)	965-0440-97	U36	960-5016-00
Voice 4	(8M)	965-0441-97	U37	960-5016-00
Display	(4M)	965-0442-97	**U5** DC PCB	960-5015-01

**** GAMES BELOW THIS LINE / NEXT COLUMN ARE S.A.M. SYSTEM GAMES**

TO ORDER MEMORY STICK WITH GAME FILES FROM YOUR DISTRIBUTOR, USE SPI PART NUMBER 970-0128-00 & INCLUDE THE GAME NAME / LANGUAGE FILE(S) DESIRED.

World Poker Tour™ Pinball (WPT) (Notes 7, 9)

Boot B-02	(8M)	**965-BOOT-SAM**	**1.04** | $7E62	**U9**	*960-5016-00 unprogrammed*

Memory Stick 128MB (970-0128-00)	**Version**	**System**	**Bin Files:**
English + Spanish	1.12AL	1.17+	WPT0112AL.bin
English Only	1.12A	1.17+	WPT0112A.bin
English + French	1.12AF	1.17+	WPT0112AF.bin
French Only	1.12F	1.17+	WPT0112F.bin
German + French	1.12GF	1.17+	WPT0112GF.bin
German Only	1.12G	1.17+	WPT0112G.bin
English + Italian	1.12AI	1.17+	WPT0112AI.bin
Italian Only	1.12I	1.17+	WPT0112I.bin

NOTE: THE TYPICAL SIZE PER UNZIPPED BIN FILE IS 25MB – 30MB+/–

The Simpsons™ Kooky Carnival Redemption (Note 9)

Boot B-02	(8M)	**965-BOOT-SAM**	**1.04** | $7E62	**U9**	*960-5016-00 unprogrammed*

Memory Stick 128MB (970-0128-00)	**Version**	**Bin Files:**
English Only	1.05	SKC0105.bin
English New Jersey Only	0.09NJ	SKC0090NJ.bin

NOTE: THE TYPICAL SIZE PER UNZIPPED BIN FILE IS 5.5MB +/–

©Disney's Pirates of the Caribbean Pinball (POTC) (Notes 7, 9)

Boot B-02	(8M)	**965-BOOT-SAM**	**1.06** | $2014	**U9**	*960-5016-00 unprogrammed*

Memory Stick 128MB (970-0128-00)	**Version**	**System**	**Bin Files:**
English + Spanish	1.15AS	1.17+	POTC115AS.bin
English + French	1.15AF	1.17+	POTC115AF.bin
German + French	1.15GF	1.17+	POTC115GF.bin
English + Italian	1.15AI	1.17+	POTC115AI.bin

NOTE: THE TYPICAL SIZE PER UNZIPPED BIN FILE IS 25MB – 30MB+/–

Family Guy™ Pinball (FG) (Notes 7, 9)

Boot B-02	(8M)	**965-BOOT-SAM**	**2.09** | $10A3	**U9**	*960-5016-00 unprogrammed*

Memory Stick 128MB (970-0128-00)	**Version**	**System**	**Bin Files:**
English + Spanish	10.00AL	1.23+	FG1000AL.bin
English + French	10.00AF	1.23+	FG1000AF.bin
English + German	10.00AG	1.23+	FG1000GF.bin
English + Italian	10.00AI	1.23+	FG1000AI.bin

NOTE: THE TYPICAL SIZE PER UNZIPPED BIN FILE IS 25MB – 30MB+/–

Spider-Man™ Pinball (S-M) (Notes 7, 9)

Boot B-02	(8M)	**965-BOOT-SAM**	**2.10** | $F625	**U9**	*960-5016-00 unprogrammed*

Memory Stick 128MB (970-0128-00)	**Version**	**System**	**Bin Files:**
English + Spanish	1.3ES	1.27+	spd_1_30_es.bin
English + French	1.3EF	1.27+	spd_1_30_ef.bin
German+French	1.3GF	1.27+	spd_1_30_gf.bin
English + Italian	1.3EI	1.27+	spd_1_30_ei.bin

NOTE: THE TYPICAL SIZE PER UNZIPPED BIN FILE IS 25MB – 30MB+/–

footnotes:

1 ROMs on CPU/Sound Bd.: 520-5136-**00** (Stereo) & Display Cont. Bd.: 520-5055-01
2 ROMs on CPU/Sound Bd.: 520-5136-**10** (Mono) & Display Cont. Bd.: 520-5055-01
3 ROMs on CPU/Sound Board: 520-5136-**15*** (Mono) (*FCC 11-97) &
Display Controller Board: 520-5055-**02*** (*FCC 11-97)

APPENDIX A

Pinball Game Firmware Table

EPROM	Chip Size	Program Part Nº	USA Ver.	Bd. Loc.	Raw Part Nº
Laser War					
CPU	(256K)	965-0004-00	LWAR.C5	C5	960-5007-00
Sound (Old)	(256K)	965-0005-00		J5	960-5007-00
Sound (Old)	(256K)	965-0006-00		J6	960-5007-00
Sound (Old)	(256K)	965-0007-00		J7	960-5007-00
			- OR -		
Sound	(256K)	965-0008-00		7F	960-5007-00
Sound 1	(512K)	965-0009-00		6F	960-7001-02
Sound 2	(512K)	965-0010-00		4F	960-7001-02
Secret Service					
CPU	(256K)	965-0011-00	A4-6	B5	960-5007-00
CPU	(256K)	965-0012-00	A4-6	C5	960-5007-00
Voice 1	(512K)	965-0014-00		6F	960-7001-02
Voice 2	(512K)	965-0015-00		4F	960-7001-02
Sound	(256K)	965-0013-00		7F	960-5007-00
Torpedo Alley					
CPU	(256K)	965-0016-00	A2-1	B5	960-5007-00
CPU	(256K)	965-0017-00	A2-1	C5	960-5007-00
Voice 1	(512K)	965-0019-00		6F	960-7001-02
Voice 2	(512K)	965-0020-00		4F	960-7001-02
Sound	(256K)	965-0018-00		7F	960-5007-00
Time Machine					
CPU	(128K)	965-0021-00	A2-4	B5	960-5006-00
CPU	(256K)	965-0022-00	A2-4	C5	960-5007-00
Voice 1	(512K)	965-0024-00		6F	960-7001-02
Voice 2	(512K)	965-0025-00		4F	960-7001-02
Sound	(256K)	965-0023-00		7F	960-5007-00
Playboy 35th Anniversary					
CPU	(256K)	965-0046-00	A2-4	B5	960-5007-00
CPU	(256K)	965-0047-00	A2-4	C5	960-5007-00
Voice 1	(512K)	965-0049-00		6F	960-7001-02
Voice 2	(512K)	965-0050-00		4F	960-7001-02
Sound	(256K)	965-0048-00		7F	960-5007-00
ABC Monday Night Football					
CPU	(128K)	965-0031-00	A2-7	B5	960-5006-00
CPU	(256K)	965-0032-00	A2-7	C5	960-5007-00
Voice 1	(512K)	965-0034-00		6F	960-7001-02
Voice 2	(512K)	965-0035-00		4F	960-7001-02
Sound	(256K)	965-0033-00		7F	960-5007-00
Robocop					
CPU	(256K)	965-0036-00	A3-4	B5	960-5007-00
CPU	(256K)	965-0037-00	A3-4	C5	960-5007-00
Voice 1	(512K)	965-0039-00		6F	960-7001-02
Voice 2	(512K)	965-0040-00		4F	960-7001-02
Sound	(256K)	965-0038-00		7F	960-5007-00
Phantom of the Opera					
CPU	(128K)	965-0026-00	A3-2	B5	960-5006-00
CPU	(256K)	965-0027-00	A3-2	C5	960-5007-00
Voice 1	(512K)	965-0029-00		6F	960-7001-02
Voice 2	(512K)	965-0030-00		4F	960-7001-02
Sound	(256K)	965-0028-00		7F	960-5007-00
Back to the Future					
CPU	(256K)	965-0041-00	A2-0	B5	960-5007-00
CPU	(256K)	965-0042-00	A2-0	C5	960-5007-00
Voice 1	(512K)	965-0044-00		6F	960-7001-02
Voice 2	(512K)	965-0045-00		4F	960-7001-02
Sound	(256K)	965-0043-00		7F	960-5007-00
The Simpsons					
CPU	(128K)	965-0051-00	A2-7	B5	960-5006-00
CPU	(256K)	965-0052-00	A2-7	C5	960-5007-00
Voice 1	(512K)	965-0054-00		6F	960-7001-02
Voice 2	(512K)	965-0055-00		4F	960-7001-02
Sound	(256K)	965-0053-00		7F	960-5007-00
Checkpoint					
CPU	(128K)	965-0056-00	A1-7	B5	960-5006-00
CPU	(256K)	965-0134-00	A1-7	C5	960-5007-00
Voice 1	(1M)	965-0057-00		F7	960-5009-00
Voice 2	(1M)	965-0058-00		F5	960-5009-00
Sound	(256K)	965-0059-00		F4	960-5007-00
Display	(512K)	965-0060-00	CP80	U8	960-7001-02
Teenage Mutant Ninja Turtles					
CPU	(128K)	965-0061-00	A1.04	B5	960-5006-00
CPU	(256K)	965-0062-00	A1.04	C5	960-5007-00
Voice 1	(1M)	965-0063-00		F5/6	960-5009-00
Voice 2	(1M)	965-0064-00		F4/5	960-5009-00
Sound	(256K)	965-0065-00		F7	960-5007-00
Display	(512K)	965-0066-00	A1.04	U8	960-7001-02
Batman					
CPU	(128K)	965-0067-00	A1.06	B5	960-5006-00
CPU	(256K)	965-0135-00	A1.06	C5	960-5007-00
Voice 1	(2M)	965-0068-00		U17	960-5010-00
Voice 2	(1M)	965-0069-00		U21	960-5009-00
Sound	(256K)	965-0070-00		U7	960-5007-00
Display	(1M)	965-0071-00	A1.06	U8	960-5009-00
Star Trek 25th Anniversary					
CPU	(512K)	965-0072-00	A2.01	C5	960-7001-02
Voice 1	(2M)	965-0073-00		U17	960-5010-00
Voice 2	(2M)	965-0074-00		U21	960-5010-00
Sound	(256K)	965-0075-00		U7	960-5007-00
Display	(1M)	965-0076-00	A1.09	U8	960-5009-00
Hook					
CPU	(512K)	965-0077-00	A4.08	C5	960-7001-02
Voice 1	(2M)	965-0078-00		U17	960-5010-00
Voice 2	(2M)	965-0079-00		U21	960-5010-00
Sound	(256K)	965-0080-00		U7	960-5007-00
Display	(1M)	965-0081-00	A4.01	U8	960-5009-00
Lethal Weapon 3					
CPU	(512K)	965-0082-00	A2.08	C5	960-7001-02
Voice 1	(2M)	965-0083-00		U17	960-5010-00
Voice 2	(2M)	965-0084-00		U21	960-5010-00
Sound	(256K)	965-0085-00		U7	960-5007-00
Display	(2M)	965-0086-00	A2.06	ROM 0	960-5010-00
Display	(2M)	965-0087-00	A2.06	ROM 1	960-5010-00
	(Used on Display PCB 520-5055-00)				
			-OR-		
Display	(4M)	965-0087-04	A2.06	ROM 0	960-5015-00
	(Used on Display PCB 520-5055-01)				
Star Wars					
CPU	(512K)	965-0119-00	A1.03	C5	960-7001-02
Voice 0	(4M)	965-0132-00		U17	960-5015-00
Voice 1	(2M)	965-0133-00		U21	960-5010-00
Sound	(256K)	965-0131-00		U7	960-5007-00
Display	(2M)	965-0120-00	A1.04	ROM 0	960-5010-00
Display	(2M)	965-0121-00	A1.04	ROM 1	960-5010-00
	(Used on Display PCB 520-5055-00)				
			-OR-		
Display	(4M)	965-0122-00	A1.05	ROM 0	960-5015-00
	(Used on Display PCB 520-5055-01)				
Rocky & Bullwinkle & Friends					
CPU	(512K)	965-0138-00	A1.30	C5	960-7001-02
Voice 0	(4M)	965-0139-00		U17	960-5015-00
Voice 1	(2M)	965-0140-00		U21	960-5010-00
Sound	(256K)	965-0141-00		U7	960-5007-00
Display	(4M)	965-0142-00	A1.30	ROM 0	960-5015-00
Jurassic Park					
CPU	(512K)	965-0143-00	A5.13	C5	960-7001-02
Voice 0	(4M)	965-0144-00		U17	960-5015-00
Voice 1	(2M)	965-0145-00		U21	960-5010-00
Sound	(256K)	965-0146-00		U7	960-5007-00
Display	(4M)	965-0147-00	A5.10	ROM 0	960-5015-00
Last Action Hero					
CPU	(512K)	965-0148-00	A1.12	C5	960-7001-02
Voice 0	(4M)	965-0149-00		U17	960-5015-00
Voice 1	(2M)	965-0150-00		U21	960-5010-00
Sound	(256K)	965-0151-00		U7	960-5007-00
Display	(4M)	965-0152-00	A1.06	ROM 0	960-5015-00
Tales from the Crypt					
CPU	(512K)	965-0157-00	A3.03	C5	960-7001-02
Voice 0	(4M)	965-0158-00		U17	960-5015-00
Voice 1	(2M)	965-0159-00		U21	960-5010-00
Sound	(256K)	965-0160-00		U7	960-5007-00
Display	(4M)	965-0161-00	A3.01	ROM 0	960-5015-00
The Who's Tommy					
CPU	(512K)	965-0162-00	A4.00	C5	960-7001-02
Voice 1	(4M)	965-0165-00		U17	960-5015-00
Voice 2	(4M)	965-0166-00		U21	960-5015-00
Voice 3	(4M)	965-0167-00		U36	960-5015-00
Voice 4	(4M)	965-0168-00		U37	960-5015-00
Sound	(512K)	965-0164-00		U7	960-7001-02
Display	(4M)	965-0163-00	A4.00	ROM 0	960-5015-00
WWF Royal Rumble					
CPU	(512K)	965-0169-00	A1.06	C5	960-7001-02
Voice 1	(4M)	965-0172-00		U17	960-5015-00
Voice 2	(4M)	965-0173-00		U21	960-5015-00
Voice 3	(4M)	965-0174-00		U36	960-5015-00
Sound	(512K)	965-0171-00		U7	960-7001-02
Display	(4M)	965-0170-00	A1.02	ROM 0	960-5015-00
Guns N' Roses					
CPU	(512K)	965-0175-00	A3.00	C5	960-7001-02
Voice 1	(4M)	965-0178-00		U17	960-5015-00
Voice 2	(4M)	965-0179-00		U21	960-5015-00
Voice 3	(4M)	965-0180-00		U36	960-5015-00
Voice 4	(4M)	965-0181-00		U37	960-5015-00
Sound	(512K)	965-0177-00		U7	960-7001-02
Display	(4M)	965-0176-00	A3.00	ROM 0	960-5015-00
Maverick *					
CPU	(512K)	965-0182-00	A4.04	C5	960-7001-02
Voice 1	(4M)	965-0186-00		U17	960-5015-00
Voice 2	(4M)	965-0187-00		U21	960-5015-00
Voice 3	(4M)	965-0187-01		U36	960-5015-00
Sound	(512K)	965-0185-00		U7	960-7001-02
Display*	(4M)	965-0183-00	A4.01	ROM 0	960-5015-00
Display*	(4M)	965-0184-00	A4.01	ROM 3	960-5015-00
Mary Shelley's Frankenstein *					
CPU	(512K)	965-0188-00	A1.03	C5	960-7001-02
Voice 1	(4M)	965-0192-00		U17	960-5015-00
Voice 2	(4M)	965-0193-00		U21	960-5015-00
Voice 3	(4M)	965-0194-00		U36	960-5015-00
Sound	(512K)	965-0191-00		U7	960-7001-02
Display*	(4M)	965-0189-00	A1.03	ROM 0	960-5015-00
Display*	(4M)	965-0190-00	A1.03	ROM 3	960-5015-00
Baywatch *		(CPU Board 520-5003-04)			
CPU	(512K)	965-0195-00	A4.00	C5	960-7001-02
Voice 1	(4M)	965-0196-00		U17	960-5015-00
Voice 2	(4M)	965-0197-00		U21	960-5015-00
Sound	(512K)	965-0199-00		U7	960-7001-02
Display*	(4M)	965-0200-00	A4.00	ROM 0	960-5015-00
Display*	(4M)	965-0201-00	A4.00	ROM 3	960-5015-00
Batman Forever *		(CPU Board 520-5003-04)			
CPU	(512K)	965-0202-00	A3.02	C5	960-7001-02
Voice 1	(4M)	965-0203-00		U17	960-5015-00
Voice 2	(4M)	965-0204-00		U21	960-5015-00
Sound	(512K)	965-0205-00		U7	960-7001-02
Display*	(4M)	965-0206-00	A3.00	ROM 0	960-5015-00
Display*	(4M)	965-0207-00	A3.00	ROM 3	960-5015-00

* ***Note:*** *Display* ***EPROMS (4M)*** *for* ***Maverick*** *thru* ***Batman Forever*** *require an access time of* ***120 Nsec*** *or faster.*

APPENDIX B

Semi-Conductors / Integrated Circuits (I.C.) / Relays Cross-Reference Table

Table №	Type	Source Number	STERN® PINBALL	N T E®	E C G®	Radio Shack®	R C A®
	RECTIFICATION, BLOCKING, DAMPENING DIODES AND/OR LIGHT EMITTING DIODES (LEDs)						
1	Diode	1N4001	112-5001-00	NTE552	ECG552	- — - — -	SK9000
	Diode	1N4004	112-5003-00	NTE116	ECG116	276-1103	SK3312
	Diode	1N5401	112-0056-00	NTE5801	ECG5801	276-1143	SK9004
	Diode	1N5404	112-5004-00	NTE5804	ECG5804	276-1144	SK9007
	Diode	T6A10L	112-5006-01	NTE5812	ECG5812	- — - — -	- — - — -
	Diode	FR302	112-5009-00	NTE588	ECG588	- — - — -	SK5014
	Diode, Signal	1N914	112-5014-00	- — - — -	- — - — -	- — - — -	- — - — -
	LED	**MT5000UR** or **TLRH180P** (T1-3/4 GaAlAs)	165-5052-00 *(old SPI Part №: 165-5100-00)*	- — - — -	- — - — -	276-066B	- — - — -
	ZENER DIODES						
2	Diode	1N4742A 12v	112-0061-00	NTE142A	ECG142A	276-563	SK12V
	Diode	1N4760B 68v	112-0062-00B	NTE5092A	ECG5092A	- — - — -	SK68V
	Diode	1N4764A 100v	112-0049-00A	NTE5096A	ECG5096A	- — - — -	SK100V
	Diode	1N5228 3.9v	112-0053-00	NTE5007A	ECG5007A	- — - — -	SK3A9
	Diode	1N5234B 6.2v	112-0047-00B	NTE5013A	ECG5013A	276-561	SK6A2
	Diode	1N5379 110v	112-0072-00	NTE5157	ECG5157	- — - — -	SK110X
	Diode	1N6267A 6.8v	112-5011-00	NTE4902	ECG4902	- — - — -	- — - — -
	Diode	1N4752A 33v	112-5010-00A	NTE147A	ECG147A	- — - — -	SK33V
	Diode	1N4736 6.8v 1w	112-5007-00	NTE5071A	ECG5071A	- — - — -	- — - — -
	TRANSISTORS - TYPE FET, NPN, PNP AND/OR SCR						
3	FET Trans.	STP20N10L	110-0106-00	NTE2987	ECG2987	- — - — -	- — - — -
	FET Trans.	STP19N06L	110-0088-00	NTE2985	ECG2985	- — - — -	- — - — -
	FET Trans.	VN02N	110-0089-00	- — - — -	- — - — -	- — - — -	- — - — -
	NPN Trans.	2N4401	110-0073-00	NTE85	ECG85	276-2009	SK3124A
	NPN Trans.	2N6427	110-0070-00	NTE48	ECG48	- — - — -	SK4906
	NPN Trans.	MJE340	110-0071-00	NTE157	ECG157	- — - — -	SK3747
	NPN Trans.	MPSA42	110-0082-00	NTE287	ECG287	- — - — -	SK3232
	NPN Trans.	2N3904	110-0069-00	NTE123AP	ECG123AP	276-2009	- — - — -
	NPN Trans.	TIP122	110-0067-00	NTE261	ECG261	276-2068	SK3896
	NPN Trans.	MJE15030	110-0101-00	NTE375	ECG375	- — - — -	SK9118
	PNP Trans.	2N5401	110-0078-00	NTE288	ECG288	- — - — -	SK3434
	PNP Trans.	MJE15031	110-0103-00	NTE292	ECG292	- — - — -	SK3441
	PNP Trans.	MJE350	110-0072-00	NTE374	ECG374	- — - — -	SK9042
	PNP Trans.	MPSA92	110-0100-00	NTE288	ECG278	- — - — -	SK3434
	PNP Trans.	TIP42	110-0068-00	NTE332	ECG332	- — - — -	SK9236
	PNP Trans.	TIP32C	110-0081-00	NTE292	ECG292	- — - — -	SK3441
	PNP Trans.	TIP36C	110-0077-00	NTE393	ECG393	- — - — -	SK3961
	SCR Trans.	2N5060	110-0074-00	NTE5400	ECG5400	276-1067	SK3950
	SCR Trans.	SCR2800B	110-0083-00	NTE5461-8	ECG5461-8	- — - — -	- — - — -
	BRIDGE RECTIFIERS (BR)			**Comments:**			
4	BR (Present)	DB3501 or CM3501	112-5000-00	For White Star I/O Bds., BR = 35 Amp @ 100v P.I.V.			
	RELAYS			**Comments:**			
5	Relay	FRL-264 D024/02CK	190-5002-00	For PPB, Power Supply, & White Star I/O Boards, Relay = 24v DC 10 Amp DPDT			
	Relay	FRL-264 D006/04CV	190-5001-00	For CPU Boards, Relay = 6v DC 5 Amp 4 Pole DT			

APPENDIX C

Production Start Date, Manual Part Nº, ROM Size & Positions and Jumper W6 Installed Note‡ (White Star Board System & S.A.M. System Only*)

	Game Name White Star Bd. System™	Production Start Date and Manual Part Nr.	CPU/Sound Board **Sound U7 512K** CPU/Sound Board **Game U210 1MB** CPU/Sound Board **Voice ROMS:**				Jumper Installed (‡ see Note)
			U17	U21	U36	U37	
29	Apollo 13 (A13)	NOV 95 780-5044-00	4MB	4MB	4MB	Not Used	n / a
30	Golden Eye	FEB 96 780-5042-00	4MB	4MB	Not Used	Not Used	n / a
31	Twister	APR 96 780-5041-00	4MB	4MB	Not Used	Not Used	n / a
32	ID4: Independence Day	JUL 96 780-5045-00	4MB	4MB	Not Used	Not Used	n / a
33	Space Jam	OCT 96 780-5043-00	4MB	4MB	4MB	Not Used	n / a
34	The Star Wars Trilogy - Sp. Ed.	FEB 97 780-5056-00	4MB	4MB	Not Used	Not Used	n / a
35	The Lost World: Jurassic Park	JUN 97 780-5053-00	4MB	4MB	Not Used	Not Used	n / a
36	The X-Files	AUG 97 780-5046-00	4MB	4MB	Not Used	Not Used	n / a
37	Starship Troopers	NOV 97 780-5059-00	4MB	4MB	4MB	Not Used	n / a
38	Viper Night Drivin'	FEB 98 780-5035-00	4MB	4MB	4MB	4MB	n / a
39	Lost In Space	JUN 98 780-5060-00	4MB	4MB	4MB	4MB	n / a
40	Godzilla	SEP 98 780-5040-00	4MB	4MB	4MB	4MB	n / a
41	South Park	JAN 99 780-5071-00	8MB	8MB	8MB	8MB	W6
42 a	Harley-Davidson®	AUG 99 780-5067-01	8MB	8MB	8MB	8MB	W6
42 b	Harley-Davidson®2nd Ed.	SEP 02 780-5067-10	8MB	8MB	8MB	8MB	W6
42 c	Harley-Davidson® 3rd Ed.	OCT 04 780-5087-00	8MB	8MB	8MB	8MB	W6
43 a	Striker Xtreme	MAR 00 780-5068-01	8MB	8MB	8MB	8MB	W6
43 b	NFL	OCT 00 780-50**73**-00	8MB	8MB	8MB	8MB	W6
44	Sharkey's Shootout	JUL/OCT 00 780-5072-01	8MB	8MB	8MB	Not Used	W6
45	High Roller Casino	JAN 01 780-5065-00	8MB	8MB	8MB	8MB	W6
46	Austin Powers™	MAY 01 780-5074-00	8MB	8MB	8MB	8MB	W6
47	MONOPOLY®	SEP 01 780-5075-00	8MB	8MB	8MB	Not Used	W6
48	Playboy	FEB 02 780-5076-00	8MB	8MB	8MB	8MB	W6
49	RollerCoaster Tycoon™	AUG 02 780-5078-00	8MB	8MB	8MB	Not Used	W6
50	The Simpsons™ Pinball Party	JAN 03 780-5077-00	8MB	8MB	8MB	8MB	W6
51	T3®: Rise of the Machines™	MAY 03 780-5079-00	8MB	8MB	8MB	8MB	W6
52	The Lord of the Rings™	NOV 03 780-5080-00	8MB	8MB	8MB	8MB	
53	Ripley's Believe It or Not!®	APR 04 780-5081-00	8MB	8MB	8MB	8MB	

**** Note:*** *For complete Appendix Information for Games **Laser War** through **Batman Forever**, see any Service Game Manual between **Apollo 13** through **Ripley's Believe It or Not!** or on-line at our website www.sternpinball.com/parts.htm; also available on CD-R, 970-2003-00 (**The Simpsons™ Pinball Party**, **T3®** and **The Lord of the Rings™**).*

‡ *Additional Information for **Installed** Jumper (above games 41-51):*

• *Installed **W6** so 8MB ROMS can be utilized. See the **CPU/Sound Board Schematic** (Sheet 2 of 3, Address Location 3E) in the games' Service Game Manual. Games 52 - 57 CPU/Sound Board differ than <51 (See Appendix D).*

See **Apdx. A** for more detailed information on **Pinball Game Firmware** *(ROM Name, Size, Part Numbers, USA Version & Checksum and Board Locations).*

	Game Name White Star Board System™	Production Start Date and Manual Part Nr.	CPU/Sound Board **Sound U7 512K** CPU/Sound Board **Game U210 1MB** CPU/Sound Board **Voice ROMS:**			
			U17	U21	U36	U37
54	Elvis®	AUG 04 780-5084-00	8MB	8MB	8MB	8MB
55	The Sopranos℠	FEB 05 780-5085-00	8MB	8MB	8MB	8MB
56	NASCAR®	JUL 05 780-5086-00	8MB	8MB	8MB	8MB
57	Grand Prix	SEP 05 780-5091-00	8MB	8MB	8MB	8MB

See **Apdx. A** for more detailed information on **Pinball Game Firmware** *(ROM Name, Size, Part Numbers, USA Version & Checksum and Board Locations).*

	Game Name S.A.M. System	Production Start Date and Manual Part Nr.	S.A.M. System CPU/Sound Board Boot EPROM **U9** 965-BOOT-SAM *(Programmed)*			
58	World Poker Tour™ (WPT)	JUN 06 780-5088-00	8MB	B-02 V2.1+	chksum $F625	LOC: U9
59	The Simpsons™ Kooky Carnival	APR 06 780-5090-00	8MB	B-02 V2.1+	chksum $F625	LOC: U9
60	©Disney's Pirates of the Caribbean	AUG 06 780-5092-00	8MB	B-02 V2.1+	chksum $F625	LOC: U9
61	Famil Guy™	DEC 06 780-5093-00	8MB	B-02 V2.1+	chksum $F625	LOC: U9
62	Spider-Man™	MAY 07 780-5094-00	8MB	B-02 V2.1+	chksum $F625	LOC: U9

Games 58 – current, S.A.M. System : CPU/Sound & I/O Power Driver PCBs differ than White Star *(previous Games 29 – 57)*; Disp. Controller Not Required.

APPENDIX D

Board Type (White Star Board System* Only) Table

Game Name	Flipper	I/O Power Driver	CPU/Sound Stereo	Disp. Power Supply	Dot Matrix Display	Display Controller	OPTO Transmitter	OPTO Receiver	OPTO Application
Apollo 13	520-5080-00 2-Flipper	520-5137-00	520-5136-00	520-5138-00	520-5052-00 128 X 32 Dots	520-5055-01	520-5124-00 Single OPTO	520-5125-00 Single OPTO	5-Ball Trough over Up-Kicker
	Miscellaneous PC Boards:	Light Boards 520-5130-01, -04 & -05 Magnet Interface, 7-Segment Display & Light Bd. 520-5130-06 Magnet Driver Board 520-5130-02 Switch Membrane Board 520-5130-03				Relay Board 520-5010-00			
Golden Eye	520-5080-00 2-Flipper	520-5137-00	520-5136-00	520-5138-00	520-5052-00 128 X 32 Dots	520-5055-01	520-5124-00 Single OPTO	520-5125-00 Single OPTO	5-Ball Trough over Up-Kicker
	Miscellaneous PC Boards:	Light Boards 520-5128-05 through -08		Mag. Processor X2 Driver Bd. 520-5143-00		Relay Board 520-5010-00			

GAMES HEREON NO LONGER REQUIRE THE FLIPPER BOARD WITH THE WHITE STAR BOARD SYSTEM™

Game Name	I/O Power Driver	CPU/Sound Mono	Disp. Power Supply	Dot Matrix Display	Display Controller	OPTO Transmitter	OPTO Receiver	OPTO Application	Misc OPTO & App.
Twister	520-5137-01	520-5136-10	520-5138-00	520-5052-00 128 X 32 Dots	520-5055-01	520-5124-00 Single OPTO	520-5125-00 Single OPTO	5-Ball Trough over Up-Kicker	
	Miscellaneous PC Boards:	Light Boards 520-5145-01 through -07		Mag. Drv. Bd. 520-5143-00	Relay Board 520-5010-00				
Independence Day (ID4)	520-5137-01	520-5136-10	520-5138-00	520-5052-00 128 X 32 Dots	520-5055-01	520-5124-00 Single OPTO	520-5125-00 Single OPTO	4-Ball Trough over Up-Kicker	
	Miscellaneous PC Boards:	Light Boards 520-5149-01 through -10		Servo Mtr. Bd. 520-5152-00		520-5082-00 Long Hop OPTO	520-5083-00 Long Hop OPTO	Alien Head Enter	
Space Jam	520-5137-01	520-5136-10	520-5138-00	520-5052-00 128 X 32 Dots	520-5055-01	520-5124-00 Single OPTO	520-5125-00 Single OPTO	5-Ball Trough over Up-Kicker	
	Miscellaneous PC Boards:	2X 7-Segment Display Board 520-5153-00							
The Star Wars Trilolgy - Special Ed.	520-5137-01	520-5136-10	520-5138-00	520-5052-00 128 X 32 Dots	520-5055-01	520-5124-00 Single OPTO	520-5125-00 Single OPTO	4-Ball Trough over Up-Kicker	
	Miscellaneous PC Boards:	Relay Board 520-5010-00							
The Lost World: J.P.	520-5137-01	520-5136-10	520-5138-00	520-5052-00 128 X 32 Dots	520-5055-01	520-5124-00 Single OPTO	520-5125-00 Single OPTO	4-Ball Trough over Up-Kicker	520-5162-00 2-Pos. Motor Sensor on Snagger Motor
	MiscellaneousPC Boards:	DC Relay Bd. 520-5066-00	Shaker Mtr. Bd. 520-5065-00						
The X-Files	520-5137-01	520-5136-10	520-5138-00	520-5052-00 128 X 32 Dots	520-5055-01	520-5124-00 Single OPTO	520-5125-00 Single OPTO	4-Ball Trough over Up-Kicker	520-5155-00 3-Pos. Motor Sensor on File Cab. Motor
	Miscellaneous PC Boards:					520-5082-00 Long Hop OPTO	520-5083-00 Long Hop OPTO	File Cabinet Enter	
Starship Troopers	520-5137-01	520-5136-15	520-5138-00	520-5052-00 128 X 32 Dots	520-5055-02	520-5124-00 Single OPTO	520-5125-00 Single OPTO	4-Ball Trough over Up-Kicker	
	Miscellaneous PC Boards:	4X 7-Segment Display Board 520-5166-00				520-5082-00 Long Hop OPTO	520-5083-01 Long Hop OPTO	L/R Orbit Lane Enter	
Viper Night Drivin'	520-5137-01	520-5136-16	520-5138-00	520-5052-00 128 X 32 Dots	520-5055-03	520-5124-00 Single OPTO	520-5125-00 Single OPTO	4-Ball Trough over Up-Kicker	
	Miscellaneous PC Boards:	Relay Board 520-5010-00				520-5082-00 Long Hop OPTO	520-5083-01 Long Hop OPTO	Jump Ramp	
Lost In Space	520-5137-01	520-5136-16	520-5138-00	520-5052-00 128 X 32 Dots	520-5055-03	515-0173-00 Dual OPTO	515-0174-00 Dual OPTO	4-Ball Trough over Up-Kicker	
	Miscellaneous PC Boards:	Relay Board 520-5010-00							
Godzilla	520-5137-01	520-5136-16	520-5138-00	520-5052-00 128 X 32 Dots	520-5055-03	515-0173-00 Dual OPTO	515-0174-00 Dual OPTO	4-Ball Trough over Up-Kicker	
	Miscellaneous PC Boards:	Shaker Mtr. Bd. 520-5065-00							
South Park	520-5137-01	520-5136-16	520-5138-00	520-5052-00 128 X 32 Dots	520-5055-03	515-0173-00 Dual OPTO	515-0174-00 Dual OPTO	5-Ball Trough over Up-Kicker	
	Miscellaneous PC Boards:					520-5082-00 Long Hop OPTO	520-5083-01 Long Hop OPTO	Kenny Under Trough Enter	
Harley-Davidson® 1st-3rd* Editions	520-5137-01	520-5136-16 *520-5300-00*	520-5138-00	520-5052-00 128 X 32 Dots	520-5055-03	515-0173-00 Dual OPTO	515-0174-00 Dual OPTO	4-Ball Trough over Up-Kicker	
	Miscellaneous PC Boards:	Relay Board 520-5010-00	Shaker Mtr. Bd. 520-5065-00	Diode Board 520-5146-00		520-5082-00 Long Hop OPTO	520-5083-01 Long Hop OPTO	Motorcycle Enter	
Striker Xtreme (NFL)	520-5137-01	520-5136-16	520-5138-00	520-5052-00 128 X 32 Dots	520-5055-03	515-0173-00 Dual OPTO	515-0174-00 Dual OPTO	4-Ball Trough over Up-Kicker	520-5155-00 3-Pos. Motor Sensor on Goalie Motor
	Miscellaneous PC Boards:	DC Relay Bd. 520-5066-00	Relay Board 520-5010-00	Diode Board 520-5146-00	for UK ONLY> Solenoid Expander Bd. 520-5192-00	520-5082-00 Long Hop OPTO	520-5083-01 Long Hop OPTO	Goalie Under-Trough Enter	
Sharkey's Shootout	520-5137-64	520-5136-64	520-5138-00	520-5052-00 128 X 32 Dots	520-5055-03	515-0173-00 Dual OPTO	515-0174-00 Dual OPTO	4-Ball Trough over Up-Kicker	520-5194-00 4-Pos. Motor Sensor on ?-Ball Motor
	MiscellaneousPC Boards:	Relay Board 520-5010-00	Sol. Exp. Bd. 520-5192-00						
High Roller Casino	520-5137-01	520-5136-16	520-5138-00	520-5052-00 128 X 32 Dots	520-5055-03	515-0173-00 Dual OPTO	515-0174-00 Dual OPTO	4-Ball Trough over Up-Kicker	520-5194-00 4-Pos. Motor Sensor on Roulette Wheel Motor
						520-5082-00 Long Hop OPTO	520-5083-01 Long Hop OPTO	Ball Lock under Roulette	
	Miscellaneous PC Boards:	Dot Display (5X7) in Slot Mach. 520-5197-00			for UK ONLY> Solenoid Expander Bd. 520-5192-00	520-5196-00 3-Pos. OPTO	520-5195-00 3-Pos. OPTO	Up/Dn Ramp in Slot Mach.	
Austin Powers™	520-5137-01	520-5136-16	520-5138-00	520-5052-00 128 X 32 Dots	520-5055-03	515-0173-00 Dual OPTO	515-0174-00 Dual OPTO	4-Ball Trough over Up-Kicker	520-5212-00 Pulse-Stretcher OPTO on Spini-Me
	MiscellaneousPC Boards:	Relay Bd. (X3) 520-5010-00			for UK ONLY> Solenoid Expander Bd. 520-5192-00	520-5082-00 Long Hop OPTO	520-5083-01 Long Hop OPTO	Time Machine Ramp	
MONOPOLY®	520-5137-01	520-5136-16	520-5138-00	520-5052-00 128 X 32 Dots	520-5055-03	515-0173-00 Dual OPTO	515-0174-00 Dual OPTO	4-Ball Trough over Up-Kicker	
	MiscellaneousPC Boards:	DC Relay Bd. 520-5066-00	Mini-Dot Display (3 by 5X7) 520-5197-00 (Electric C° Sign)		for UK ONLY> Solenoid Expander Bd. 520-5192-00	520-5218-00 4-Pos. OPTO	520-5210-00 4-Pos. OPTO	Bank Door	

Table continued on the next page.

APPENDIX D

Board Type (White Star Board System* & S.A.M. System** Only) Table

Game Name	I/O Power Driver	CPU/Sound (old & new)	Disp. Power Supply	Dot Matrix Display	Display Controller	OPTO Transmitter	OPTO Receiver	OPTO Application	Misc OPTO & App.
Playboy	520-5137-01	520-5136-16	520-5138-00	520-5052-00 128 X 32 Dots	520-5055-03	515-0173-00 Dual OPTO	515-0174-00 Dual OPTO	4-Ball Trough over Up-Kicker	
	Miscellaneous PC Boards:	DC Relay Bd. 520-5066-00	Relay Bd. 520-5010-00		for UK ONLY> Solenoid Expander Bd. 520-5192-00				
RollerCoaster Tycoon™	520-5137-01	520-5136-16	520-5138-00	520-5052-00 128 X 32 Dots	520-5055-03	515-0173-00 Dual OPTO	515-0174-00 Dual OPTO	4-Ball Trough over Up-Kicker	520-5222-00 1-Position Switch Detect on Wheel Spin
	Miscellaneous PC Boards:	DC Relay Bd. 520-5066-00	Mini-Dot Display (3 by 5X7) 520-5221-00 (Ramp Enter Sign)		for UK ONLY> Solenoid Expander Bd. 520-5192-00	520-5082-00 Long Hop OPTO	520-5083-01 Long Hop OPTO	Behind 1-Bank Drop Target	
The Simpsons™ Pinball Party	520-5137-01	520-5136-16	520-5138-00	520-5052-00 128 X 32 Dots	520-5055-03	515-0173-00 Dual OPTO	515-0174-00 Dual OPTO	4-Ball Trough over Up-Kicker	
	Miscellaneous PC Boards:	LED Bd. 520-5219-00	Color Dot Display (4 by 5X7) 520-5225-00 (TV Set)		for UK ONLY ◀◀◀ Aux. Driver Bd. 520-5068-01				
Terminator® 3: Rise of the Machines™	520-5137-01	**520-5136-16**	520-5138-00	520-5052-00 128 X 32 Dots	520-5055-03	515-0173-00 Dual OPTO	515-0174-00 Dual OPTO	4-Ball Trough over Up-Kicker	
	Miscellaneous PC Boards:				for UK ONLY ◀◀◀ Aux. Driver Bd. 520-5068-01	515-7307-00 Single OPTO	515-7308-00 Single OPTO	TXCannon Trough	
The Lord of the Rings™	520-5137-01	***New* 520-5300-00**	520-5138-00	520-5052-00 128 X 32 Dots	520-5055-03	515-0173-00 Dual OPTO	515-0174-00 Dual OPTO	4-Ball Trough over Up-Kicker	500-6746-00 (White Trans.) 500-6747-00 (Black Rec.)
	Miscellaneous PC Boards:	19-LED PCB 520-5242-00	OPTO Transmitter / Receiver Amplifier PCB 520-5239-00		for UK ONLY ◀◀◀ Aux. Driver Bd. 520-5068-01	515-7307-00 Single OPTO	515-7308-00 Single OPTO	Orthanc Tower Trough	
Ripley's Believe It or Not!®	520-5137-01	520-5300-00	520-5138-00	520-5052-00 128 X 32 Dots	520-5055-03	515-0173-00 Dual OPTO	515-0174-00 Dual OPTO	4-Ball Trough over Up-Kicker	500-6775-00 OPTO Trnscvr
	Miscellaneous PC Boards:	520-5236-00 X3 Dot Display	OPTO Transmitter / Receiver Amplifier PCB 520-5239-01		for UK ONLY ◀◀◀ Aux. Driver Bd. 520-5068-01	520-5234-00 3-Pos. OPTO	520-5234-00 3-Pos. OPTO	Vari-Target	520-5235-03 X3 Aux. Drvr
Elvis®	520-5137-01	520-5300-00	520-5138-00	520-5052-00 128 X 32 Dots	520-5055-03	515-0173-00 Dual OPTO	515-0174-00 Dual OPTO	4-Ball Trough over Up-Kicker	
	Miscellaneous PC Boards:				for UK ONLY ◀◀◀ Aux. Driver Bd. 520-5068-01				
The Sopranos℠	520-5137-01	520-5300-00	520-5138-00	520-5052-00 128 X 32 Dots	520-5055-03	515-0173-00 Dual OPTO	515-0174-00 Dual OPTO	4-Ball Trough over Up-Kicker	
	Miscellaneous PC Boards:				for UK ONLY ◀◀◀ Aux. Driver Bd. 520-5068-01				
NASCAR® and [NDSE]	520-5137-01	520-5300-00	520-5138-00	520-5052-00 128 X 32 Dots	520-5055-03	515-0173-00 Dual OPTO	515-0174-00 Dual OPTO	4-Ball Trough over Up-Kicker	500-6775-00 OPTO Trans. (Qty. 16) Switch Detect.
	Miscellaneous PC Boards:	520-5235-03 X3 Aux. Drvr	OPTO Transmitter / Receiver Amplifier PCB 520-5239-01		for UK ONLY ◀◀◀ Aux. Driver Bd. 520-5068-01				
Grand Prix	520-5137-01	520-5300-00	520-5138-00	520-5052-00 128 X 32 Dots	520-5055-03	515-0173-00 Dual OPTO	515-0174-00 Dual OPTO	4-Ball Trough over Up-Kicker	500-6775-00 OPTO Trans. (Qty. 16) Switch Detect.
	Miscellaneous PC Boards:	520-5235-03 X3 Aux. Drvr	OPTO Transmitter / Receiver Amplifier PCB 520-5239-01		for UK ONLY ◀◀◀ Aux. Driver Bd. 520-5068-01				

Game Name	I/O Power Driver**	CPU / Sound**	Disp. Power Supply	Dot Matrix Display	Dual OPTO Transmitter	Dual OPTO Receiver	Dual OPTO Transceiver	OPTO Transceiver Miscellaneous
World Poker Tour™ (WPT)	**520-5249-00** Backbox	**520-5246-00** Backbox	520-5138-00 Backbox	520-5052-00 128 X 32 Dots	515-0173-00 4-Ball Trough	515-0174-00 4-Ball Trough	500-6775-00 4 Switch Pairs (Qty. 8)	520-5251-00 'U' 1/per PCB Jail Bars Up Ace/Hole Mech
	Miscellaneous **PCBs :**	520-5254-00 50V Step-Up Drv	520-5250-14 14LED 5X7 Disp.	520-5239-01 OPTO Amplifier	520-5247-00 Ace/Hole Mech	520-5248-00 Ace/Hole Mech		520-5252-04 'U' 4/per PCB Drop Targets 4- & 8- Banks
The Simpsons™ Kooky Carnival	**520-5249-00** Back Door	**520-5246-00** Back Door	520-5138-00 Cabinet Rear	520-5052-00 128 X 32 Dots			**520-5253-00-ASY** Coin Drop (Qty. 11)	
	Miscellaneous **PCBs :**	515-5742-00 Shaker PCB	500-6700-00 Relay *(incl. Wiring + Conn.)*					
©Disney's Pirates of the Caribbean	**520-5249-00** Backbox	**520-5246-00** Backbox	520-5138-00 Backbox	520-5052-00 128 X 32 Dots	515-0173-00 4-Ball Trough	515-0174-00 4-Ball Trough	500-6775-00 5 Switch Pairs (Qty. 10)	
	Miscellaneous **PCBs :**	520-5239-01 OPTO Amp. (X3)	511-5024-03 Relay *(incl. Wiring + Conn.)*					
		520-5238-00 : H-E-A-R-T LED PCB						
Family Guy™	**520-5249-00** Backbox	**520-5246-00** Backbox	520-5138-00 Backbox	520-5052-00 128 X 32 Dots	515-0173-00 4-Ball Trough	515-0174-00 4-Ball Trough	500-6775-00 3 Switch Pairs (Qty. 6)	520-5252-01 'U' 1/per PCB Drop Target 1-Bank
	Miscellaneous **PCBs :**	520-5239-01 OPTO Amp. (X2)	520-5261-00 Stepper Motor	511-5042-01 Trgt. Sensor (X2)			500-6775-01 1 Switch Pair (Qty. 2)	520-5252-04 'U' 4/per PCB Drop Target 4-Bank
		511-5046-00 : Mini Playfield Lamp PCB						
Spider-Man™	**520-5249-00** Backbox	**520-5246-00** Backbox	520-5138-00 Backbox	520-5052-00 128 X 32 Dots	515-0173-00 4-Ball Trough	515-0174-00 4-Ball Trough	500-6775-00 3 Switch Pairs (Qty. 6)	
	Miscellaneous **PCBs :**	520-5239-01 OPTO Amp. (X2)						

APPENDIX D

Board Type Table

Game Name	Flipper	Sound	Power Supply	Display X-Digit
• Laser War	2-Flipper **Board Not Required**	***initial:*** 520-5002-00 ***replaced with:*** 520-5002-02 *520-5002-01 was not used.*	520-5000-00	Master: 520-5004-00 plus: 520-5005-00 (Qty. 2): 7 Digit Alpha/Numeric 520-5006-00 (Qty. 2): 7 Digit Numeric 520-5007-00 (Qty. 1): 4 Digit Numeric
• Secret Service • Torpedo Alley	3-Flipper **Board Not Required**	520-5002-02		520-5014-01 7 Digit Alpha/Numeric Combined
• Time Machine	2-Flipper **Board Not Required**			
• Playboy 35th Anniversary *	520-5033-00 2-Flipper *(*only for 100 games of Playboy 35th Anniv. & ABC Mon. Night Football)*			520-5030-00 16 Digit Alpha/Numeric Combined
• ABC Monday Night Football * • *Robocop* • *Phantom of the Opera* • *Back to the Future*				
• The Simpsons		520-5002-**03**		

Game Name	Flipper	Sound	Power Supply	Dot Matrix Display	Display Controller	OPTO Transmitter	OPTO Receiver	OPTO Apllication
• Checkpoint • Teenage Mutant Ninja Turtles	520-5033-00 2-Flipper	520-5002-03	520-5047-00	520-5042-00 128 X 16				
• Batman • Star Trek 25th Anniv. • Hook		520-5050-01						
• Lethal Weapon 3			520-5047-01	520-5052-00 128 X 32	520-5055-00			
• Star Wars • Rocky & Bull-winkle & Friends		520-5050-02						
• Jurassic Park	520-5076-00 3-Flipper		520-5047-02					
• Last Action Hero	520-5070-00 2-Flipper	520-5050-03						
• Tales from the Crypt	520-5076-00 3-Flipper				520-5055-01			
• The Who's Tommy		520-5077-00						
• WWF Royal Rumble	**520-5070 / 5080 -00** 4-Flipper (2X2)							
• Guns N' Roses	520-5076-00 3-Flipper							
• Maverick		520-5050-03	520-5047-03	520-5075-00 192 X 64	520-5092-01	520-5102-00 Single OPTO	520-5103-00 Single OPTO	Paddle Boat Wheel Enter
• Mary Shelley's Frankenstein	520-5076-00 3-Flipper	520-5077-00						
• Baywatch	**520-5070 / 5080 -00** 4-Flipper (2X2)	520-5126-02				520-5124-00 Single OPTO	520-5125-00 Single OPTO	5-Ball Trough over Up-Kicker
• Batman Forever	520-5076-00 3-Flipper					520-5124-00 Single OPTO	520-5125-00 Single OPTO	4-Ball Trough over Up-Kicker

Miscellaneous Boards (Lamp Boards & Relay Boards) not listed above can be found in each individual game manual.

APPENDIX E

Flipper Coil (White Star Board System* & S.A.M. System** Only) Table

SAM

Typical Coil Diode 1N4004 unless noted otherwise (Diode Top = above lugs next to windings; Diode Below (Bottom) = under lugs opposite of windings).

STANDARD COILS (TYPICAL APPLICATIONS)		
Ga.-Turn	**Res (Ω)**	**SPI Part Number and Comments**
20-400	1.0 Ω	090-5021-*use* : **-00** Diode Top
22-500	1.7 Ω	090-5017-*use* : -00 Diode Top
22-600	2.2 Ω	090-5017-*use* : -0B Diode Below // **-0T** Diode Top
23-700	3.1 Ω	090-5022-*use* : -0B Diode Below // **-0T** Diode Top
23-750	3.4 Ω	090-5019-*use* : -00 Diode Top
23-800	3.6 Ω	090-5001-*use* : -0B Diode Below // **-0T** Diode Top // **-NL** No Lugs 11" Leads // **-ND** No Diode
23-840	4.0 Ω	090-5005-*use* : -00 Diode Top
23.5-765	3.6 Ω	090-5037-*use* : -03 Diode Top
24-900	5.0 Ω	090-5002-*use* : -02 Diode Top // **-10** No Lugs 14" Leads
24-940	5.5 Ω	090-5036-*use* : -0B Diode Below // **-0T** Diode Top *use* **090-5051-01** No Lugs 11" Leads
25-1240	9.3 Ω	090-5034-*use* : -00 Diode Below
26-1200	10.3 Ω	090-5044-*use* : -0B Diode Below // **-0T** Diode Top // **-NL** No Lugs 11" Leads // **-ND** No Diode
27-1300	14.2 Ω	090-5003-*use* : -0T Diode Top
27-1400	14.7 Ω	090-5015-*use* : -00 Diode Below
27-1400		**511-5031-00** *Special App.: No Diode / Lugs + Conn.*
27-1500	16.3 Ω	090-5004-*use* : -0B Diode Below // **-0T** Diode Top
29-2000	33.6 Ω	090-5016-*use* : -00 Diode Top
LARGE, MEDIUM & MINI COILS (MAGNET APPLICATIONS)		
20.5-480	2.9 Ω	090-5064-*use* : -02 No Lugs *or* Core; 14" Leads // Large
22-650	4.3 Ω	090-5042-*use* : -00 No Lugs *or* Core; 6" Leads // Large **-01** No Lugs *or* Core; 12" Leads // Large
24-780	8.0 Ω	090-5061-*use* : -00 No Lugs *or* Core; 6" Lds. // Medium
29-1000	15.2 Ω	090-5059-*use* : -00 Lugs + Diode + Magnet Core // Mini
31-1500	52.0 Ω	090-5054-00 : Straight Lugs + Diode + Mag Core // Mini 090-5055-00 : 90° Lugs + Diode + Magnet Core // Mini

Please Note: *Ohm values may vary + / – .03 depending on meter calibration.*

Ordering Note: *Coils typically should not come with Coil Sleeves.* ***IF A SLEEVE EXISTS****, ensure it is the correct sleeve for the application usage. For the correct Coil Sleeve, refer to the Game Assembly Drawing the coil exists on and order separately.*

LARGE COILS (FLIPPERS & SPECIAL APPLICATIONS)		
Ga.-Turn	**Res (Ω)**	**SPI Part Number and Comments**
21-900	*call* Ω	090-5020-*use* : **-01** 3-Lugs + 1N4004 & 1N5404 Diodes **-10** Diode Top <BROWN><RED>
22-750 / 30-2600	2.6 Ω / 92.0 Ω	090-5011-*use* : **-00 DUAL WND COIL** // 3-Lugs Diode x2
22-900	3.45 Ω	090-5020-*use* : -20T Diode Top <YELLOW> // **-20-ND** No Diode
22-1080	4.2 Ω	090-5032-*use* : -0B D. Below // **-0T** D. Top <YEL-GRN> **-NL** No Diode
23-620 / 30-2600	2.4 Ω / 75.0 Ω	090-5006-*use* : -00 **DUAL WND COIL** // 3-Lugs Diode x2
23-700 / 30-2600	3.0 Ω / 83.5 Ω	090-5013-*use* : -00 **DUAL WOUND COIL** // Diode Top
23-800 / 30-2600	2.4 Ω / 90.5 Ω	090-5012-*use* : -00 **DUAL WOUND COIL** // Diode Top
23-900	4.05 Ω	090-5020-*use* : -30 Diode Top <GREEN>
23-1100	5.1 Ω	090-5030-*use* : -0T Diode Top <ORANGE> **-ND** No Diode
23-1200	7.1 Ω	090-5008-*use* : -00 Diode Top <BLACK>
23-1500	4.4 Ω	090-5062-*use* : -00 Diode Top <BLUE>
24-1570	9.5 Ω	090-5025-*use* : -00 Diode Top <BLUE>
25-1400	*call* Ω	090-5067-*use* : -0T Diode Top <RED>
25-1600	*call* Ω	090-5068-*use* : -0T Diode Top <WHITE>
25-1800	13.8 Ω	090-5041-*use* : -0T Diode Top <BLUE-GREEN>
MINI COILS (RESET / TRIP APPLICATIONS)		
27-950	*call* Ω	090-5046-*use* : -01 Diode Top
28-1050	11.5 Ω	090-5046-*use* : -00 Diode Top
27-880	*call* Ω	500-6976-01 No Lugs *or* Diode + 6" Leads & Conn.
31-590	*call* Ω	090-5010-*use* : -00 Diode Top
32-1250	35.0 Ω	**515-6916-01 :** *includes Flap & Screw* <YELLOW>
32-1800	50.2 Ω	090-5031-*use* (515-6110-00) : -0B Diode Below // **-0T** Diode Top *use 515-# to include mounting & armature brackets*
33-1590	59.0 Ω	**515-6916-00 :** *includes brackets* <WHITE>

Flipper Coil (White Star Board System* Only) Table

GAME NAME	Nº of Flippers	FLIPPERS SPI Nº / GAUGE-TURNS / Color		FLIPPERS no E.O.S. Switch SPI Nº / GAUGE-TURNS / Color	
		LOWER LEFT	LOWER RIGHT	UPPER LEFT	UPPER RIGHT
**** Note:*** *For complete Appendix Information for Games* ***Laser War*** *through* ***Batman Forever****, see any Service Game Manual between* ***Apollo 13*** *through* ***Ripley's Believe It or Not!****; or order CD-R, 970-2003-00 (****The Simpsons™ Pinball Party, Terminator® 3*** *and* ***The Lord of the Rings™****).*					
Apollo 13	2	090-5032-0T **22-1080 -YEL-GRN-**	SAME	Not Used	Not Used
Golden Eye	2	090-5032-0T **22-1080 -YEL-GRN-**	SAME	Not Used	Not Used
Twister	2	090-5020-20T **22-900 -YELLOW-**	090-5032-0T **22-1080 -YEL-GRN-**	Not Used	Not Used
ID4: Independence Day	3	090-5032-0T **22-1080 -YEL-GRN-**	SAME	Not Used	090-5020-30 **23-900 -GREEN-**
Space Jam †	2	090-5032-0T **22-1080 -YEL-GRN-**	090-5020-20T **22-900 -YELLOW-**	Not Used	Not Used
The Star Wars Trilogy - Special Edition †	2	090-5032-0T **22-1080 -YEL-GRN-**	SAME	Not Used	Not Used
The Lost World: Jurassic Park †	2	090-5032-0T **22-1080 -YEL-GRN-**	SAME	Not Used	Not Used
The X-Files †	2	090-5032-0T **22-1080 -YEL-GRN-**	SAME	Not Used	Not Used
Starship Troopers †	3	090-5030-0T **23-1100 -ORANGE-**	SAME	Not Used	090-5032-0T **22-1080 -YEL-GRN-**
Viper Night Drivin' †	2	090-5030-0T **23-1100 -ORANGE-**	SAME	Not Used	Not Used
Lost In Space †	2	090-5030-0T **23-1100 -ORANGE-**	090-5032-0T **22-1080 -YEL-GRN-**	Not Used	Not Used
Godzilla †	2	090-5032-0T **22-1080 -YEL-GRN-**	SAME	Not Used	Not Used
South Park †	2	090-5030-0T **23-1100 -ORANGE-**	SAME	Not Used	Not Used

† Coil Part Numbers ending with a "**T**" signifies the Diode is on the top of the lug *(on the coil-winding side)*;
Coil Part Numbers ending with a "**B**" signifies the Diode is on the bottom of the lugs.

Table continued on the next page.

APPENDIX E

Flipper Coil (White Star Board System* & S.A.M. System** Only) Table

GAME NAME	№ of Flippers	FLIPPERS w/E.O.S. Switch SPI № / GAUGE-TURNS / Color		FLIPPERS no E.O.S. Switch SPI № / GAUGE-TURNS / Color	
		LOWER LEFT	LOWER RIGHT	UPPER LEFT	UPPER RIGHT
Harley-Davidson® † *and 1st through 3rd Editions*	2	090-5032-0T **22-1080 -YEL-GRN-**	090-5030-0T **23-1100 -ORANGE-**	Not Used	Not Used
Striker Xtreme (NFL) †	3	090-5032-0T **22-1080 -YEL-GRN-**	090-5030-0T **23-1100 -ORANGE-**	090-5030-0T **23-1100 -ORANGE-**	Not Used
Sharkey's Shootout †	3	090-5030-0T **23-1100 -ORANGE-**	SAME	090-5030-0T **23-1100 -ORANGE-**	Not Used
High Roller Casino †	2	090-5020-20T **22-900 -YELLOW-**	090-5032-0T **22-1080 -YEL-GRN-**	Not Used	Not Used
Austin Powers™ †	2	090-5020-30 **23-900 -GREEN-**	090-5030-0T **23-1100 -ORANGE-**	Not Used	Not Used
MONOPOLY® †	3	090-5032-0T **22-1080 -YEL-GRN-**	SAME	Not Used	090-5062-0T **23-1500 -BLUE-**
Playboy †	2	090-5030-0T **23-1100 -ORANGE-**	SAME	Not Used	Not Used
RollerCoaster Tycoon™ †	4	090-5032-0T **22-1080 -YEL-GRN-**	SAME	090-5067-0T **25-1400 -RED-**	090-5068-0T **25-1600 -WHITE-**
The Simpsons™ Pinball Party †	6** (5 with Flipper Bats)	090-5032-0T **22-1080 -YEL-GRN-**	SAME	Not Used	090-5030-0T **23-1100 -ORANGE-**
		** *The Homer Head Assembly is affixed to an Upr. Rt. Style Flipper (no E.O.S. Switch):*	** 090-5020-20T **22-900 -YELLOW-**	Flippers (Mini-Bats) on 2nd Level Playfield: 090-5041-00T **25-1800 -BLU-GRN-**	090-5025-00 **24-1570 -BLUE-**
Terminator® 3: Rise of the Machines™ †	2	090-5032-0T **22-1080 -YEL-GRN-**	SAME	Not Used	Not Used
The Lord of the Rings™ †	2	090-5020-20T **22-900 -YELLOW-**	SAME	Not Used	Not Used
Ripley's Believe It or Not!® †	3	090-5032-0T **22-1080 -YEL-GRN-**	SAME	Not Used	090-5067-00T **25-1400 -RED-**
Elvis® †	4	090-5020-20T **22-900 -YELLOW-**	SAME	090-5020-30 **23-900 -GREEN-**	SAME
The Sopranos℠ †	2	090-5032-0T **22-1080 -YEL-GRN-**	SAME	Not Used	Not Used
NASCAR® and [NDSE] †	2	090-5030-0T **23-1100 -ORANGE-**	SAME	Not Used	Not Used
Grand Prix †	2	090-5030-0T **23-1100 -ORANGE-**	SAME	Not Used	Not Used

† Coil Part Numbers ending with a "**T**" signifies the Diode is on the top of the lug *(on the coil-winding side)*; Coil Part Numbers ending with a "**B**" signifies the Diode is on the bottom of the lugs.

** S.A.M. System Games **DO NOT REQUIRE DIODES**. If you use a coil from your stock which has a diode, remove it **ONLY FOR** S.A.M. System Games.

World Poker Tour™ (WPT)**	4	090-5032-ND **22-1080 [NO DIODE]**	SAME	090-5030-ND **23-1100 [NO DIODE]**	SAME
©Disney's Pirates of the Caribbean**	2	090-5030-ND **23-1100 [NO DIODE]**	SAME	Not Used	Not Used
Family Guy™ **	3 Norm.	090-5030-ND **23-1100 [NO DIODE]**	SAME	090-5062-ND **23-1500 [NO DIODE]**	Not Used
	2 Mini	090-5046-01-ND **27-950 [NO DIODE]**	SAME		
Spider-Man™ **	3	090-5032-ND **22-1080 [NO DIODE]**	SAME	Not Used	090-5032-ND **22-1080 [NO DIODE]**

APPENDIX E

Generic Coil Cross-Reference Guide † ‡

Flipper Coil Table ‡ ††

GAME NAME	Nº of Flippers	FLIPPERS w/E.O.S. Switch SPI Nº / GAUGE-TURNS / Color		FLIPPERS no E.O.S. Switch SPI Nº / GAUGE-TURNS / Color	
		LOWER LEFT	LOWER RIGHT	UPPER LEFT	UPPER RIGHT
Laser War ‡	2	090-5011-00 **22-750 / 30-2600**	SAME	Not Used	Not Used
Secret Service ‡	3	090-5006-00 **23-620 / 30-2600**	SAME	Not Used	090-5006-00 **23-620 / 30-2600**
Torpedo Alley ‡	3	090-5011-00 **22-750 / 30-2600**	090-5013-00 **23-700 / 30-2600**	Not Used	090-5012-00 **23-800 / 30-2600**
Time Machine ‡	2	090-5011-00 **22-750 / 30-2600**	SAME	Not Used	Not Used
‡ These coils are dual-wound.					
Playboy 35th Anniversary ††	2	090-5020-02 **22-900 -YEL-YEL-**	SAME	Not Used	Not Used
ABC Monday Night Football ††	2	090-5020-02 **22-900 -YEL-YEL-**	SAME	Not Used	Not Used
†† A very small % of these games used a 090-5020-20 coil which used a proto-type Solid State Flipper System. The two types of coils both are 22-900 coils; the only difference is the addition of the 1N5404 Diode on the (-02) coils which was used in the Deger Design.					
Robocop	2	090-5020-20 **22-900 -YEL-YEL-**	SAME	Not Used	Not Used
Phantom of the Opera	2	090-5020-20 **22-900 -YEL-YEL-**	SAME	Not Used	Not Used
Back to the Future	2	090-5020-20 **22-900 -YEL-YEL-**	SAME	Not Used	Not Used
The Simpsons	2	090-5020-20 **22-900 -YEL-YEL-**	SAME	Not Used	Not Used
Checkpoint	2	090-5020-20 **22-900 -YEL-YEL-**	SAME	Not Used	Not Used
Teenage Mutant Ninja Turtles	2	090-5020-30 **23-900 -GRN-GRN-**	SAME	Not Used	Not Used
Batman	2	090-5020-30 **23-900 -GRN-GRN-**	SAME	Not Used	Not Used
Star Trek 25th Anniversary	2	090-5020-30 **23-900 -GRN-GRN-**	SAME	Not Used	Not Used
Hook	2	090-5030-00 **23-1100 -ORG-ORG-**	090-5020-30 **23-900 -GRN-GRN-**	Not Used	Not Used
Lethal Weapon 3	2	090-5030-00 **23-1100 -ORG-ORG-**	SAME	Not Used	Not Used
Star Wars	2	090-5032-00 **22-1080 -YEL-GRN-**	SAME	Not Used	Not Used
Rocky & Bullwinkle & Friends	2	090-5020-30 **23-900 -GRN-GRN-**	SAME	Not Used	Not Used
Jurassic Park	3	090-5020-30 **23-900 -GRN-GRN-**	SAME	Not Used	090-5030-00 **23-1100 -ORG-ORG-**

Table continued on the next page.

APPENDIX E

Flipper Coil Table †

GAME NAME	Nº of Flippers	FLIPPERS w/E.O.S. Switch		FLIPPERS no E.O.S. Switch	
		SPI Nº / GAUGE-TURNS / Color		SPI Nº / GAUGE-TURNS / Color	
		LOWER LEFT	LOWER RIGHT	UPPER LEFT	UPPER RIGHT
Last Action Hero	2	090-5020-30 **23-900 -GRN-GRN-**	SAME	Not Used	Not Used
Tales from the Crypt	3	090-5032-00 **22-1080 -YEL-GRN-**	SAME	Not Used	090-5041-00 **25-1800 -BLU-GRN-**
The Who's Tommy	3	090-5020-30 **23-900 -GRN-GRN-**	SAME	090-5041-00 **25-1800 -BLU-GRN-**	Not Used
WWF Royal Rumble	4	090-5032-00 **22-1080 -YEL-GRN-**	SAME	090-5041-00 **25-1800 -BLU-GRN-**	SAME
Guns N' Roses	3	090-5032-00 **22-1080 -YEL-GRN-**	SAME	090-5030-00 **23-1100 -ORG-ORG-**	Not Used
Maverick	3	090-5032-00 **22-1080 -YEL-GRN**	SAME	Not Used	090-5032-00 **22-1080 -YEL-GRN-**
Mary Shelley's Frankenstein	3	090-5030-00 **23-1100 -ORG-ORG-**	SAME	Not Used	090-5030-00 **23-1100 -ORG-ORG-**
Baywatch	4	090-5030-00 **23-1100 -ORG-ORG-**	090-5020-30 **23-900 -GRN-GRN-**	090-5025-00 **24-1570 -See Note-**	090-5030-00 **23-1100 -ORG-ORG-**
Batman Forever	3	090-5032-00 **22-1080 -YEL-GRN-**	090-5020-20 **22-900 -YEL-YEL-**	Not Used	090-5020-30 **23-900 -GRN-GRN-**
Apollo 13	2	090-5032-00 **22-1080 -YEL-GRN-**	SAME	Not Used	Not Used
Golden Eye	2	090-5032-00 **22-1080 -YEL-GRN-**	SAME	Not Used	Not Used
Twister	2	090-5020-20 **22-900 -YEL-YEL-**	090-5032-00 **22-1080 -YEL-GRN-**	Not Used	Not Used
ID4: Independence Day	3	090-5032-00 **22-1080 -YEL-GRN-**	SAME	Not Used	090-5020-30 **23-900 -GRN-GRN-**
Space Jam †	2	090-5032-00T **22-1080 -YEL-GRN-**	090-5020-20T **22-900 -YEL-YEL-**	Not Used	Not Used
The Star Wars Trilogy - Special Edition †	2	090-5032-00T **22-1080 -YEL-GRN-**	SAME	Not Used	Not Used
The Lost World: Jurassic Park †	2	090-5032-00T **22-1080 -YEL-GRN-**	SAME	Not Used	Not Used
The X-Files †	2	090-5032-00T **22-1080 -YEL-GRN-**	SAME	Not Used	Not Used
Starship Troopers †	3	090-5030-00T **23-1100 -ORG-ORG-**	SAME	Not Used	090-5032-00T **22-1080 -YEL-GRN-**
Viper Night Drivin' †	2	090-5030-00T **23-1100 -ORG-ORG-**	SAME	Not Used	Not Used
Lost In Space †	2	090-5030-00T **23-1100 -ORG-ORG-**	090-5032-00T **22-1080 -YEL-GRN-**	Not Used	Not Used
Godzilla †	2	090-5032-00T **22-1080 -YEL-GRN-**	SAME	Not Used	Not Used
South Park †	2	090-5030-00T **23-1100 -ORG-ORG-**	SAME	Not Used	Not Used
Harley-Davidson® † *and* Harley-Davidson® 2nd Ed. †	2	090-5032-00T **22-1080 -YEL-GRN-**	090-5030-00T **23-1100 -ORG-ORG-**	Not Used	Not Used
Striker Xtreme (NFL) †	3	090-5032-00T **22-1080 -YEL-GRN-**	090-5030-00T **23-1100 -ORG-ORG-**	090-5030-00T **23-1100 -ORG-ORG-**	Not Used
Sharkey's Shootout †	3	090-5030-00T **23-1100 -ORG-ORG-**	SAME	090-5030-00T **23-1100 -ORG-ORG-**	Not Used
High Roller Casino †	2	090-5020-20T **22-900 -YEL-YEL-**	090-5032-00T **23-1080 -YEL-GRN-**	Not Used	Not Used
Austin Powers™ †	2	090-5020-30 **23-900 -GRN-GRN-**	090-5030-00T **23-1100 -ORG-ORG-**	Not Used	Not Used
MONOPOLY® †	3	090-5032-00T **22-1080 -YEL-GRN-**	SAME	Not Used	090-5062-00T **23-1500 -BLU-BLU-**
Playboy †	2	090-5030-00T **23-1100 -ORG-ORG-**	SAME	Not Used	Not Used
RollerCoaster Tycoon™ †	4	090-5032-00T **22-1080 -YEL-GRN-**	SAME	090-5067-00T **25-1400 -RED-RED-**	090-5068-00T **25-1600 -WHT-WHT**
The Simpsons™ Pinball Party †	6* (5 with Flipper Bats)	090-5032-00T **22-1080 -YEL-GRN-**	SAME	Not Used	090-5030-00T **23-1100 -ORG-ORG-**
		** The Homer Head Assembly is affixed to an Upr. Rt. Style Flipper (no E.O.S. Switch):*		**Flippers (Mini-Bats) on 2nd Level Playfield:**	
			* 090-5020-20T **22-900 -YEL-YEL-**	090-5041-00T **25-1800 -BLU-GRN-**	090-5025-00T **24-1570 -See Note-**
Terminator® 3: Rise of the Machines™ †	2	090-5032-00T **22-1080 -YEL-GRN-**	SAME	Not Used	Not Used
The Lord of the Rings™ †	2	090-5020-20T **22-900 -YEL-YEL-**	SAME	Not Used	Not Used
Ripley's Believe It or Not!® †	3	090-5032-00T **22-1080 -YEL-GRN-**	SAME	Not Used	090-5067-00T **25-1400 -RED-RED-**

† Coil Part Nºs ending with a "T" signifies the Diode is on the top of the lug (on the coil-winding side); Coil Part Nºs ending with a "B" signifies the Diode is on the bottom of the lugs.

APPENDIX F

Motor Specification (White Star Board System* Only) Table

Game Name	Function	Specifications	Part Numer
Apollo 13	Rocket Up/Down Movement	Bowman Motor 24VAC 60Hz 3W 6 RPM CCW	515-6383-00 *incl. Connector*
	Moon Unit Rotational Orbit	Multi Products Motor 24VAC 50/60Hz 3W 6 RPM CCW	515-6487-00 *incl. Connector*
	Shaker	Johnson Motor *(Vibrator)* 10.5VDC 10 AMP 2950 RPM CW	041-5029-**00** *MOTOR ONLY*
Golden Eye	Satellite Left/Right Movement	Bowman Motor 24VAC 60Hz 3W 6 RPM CW	515-6528-00 *incl. Connector*
Twister	Spinning Disc with Magnet	Multi Products Motor 24VAC *(041-5026-00)* 50/60Hz 3W 325 RPM CCW	515-6347-00 *incl. Connector*
	Backbox Fan (Tornado Wind)	Multi Products Motor 24VAC *(041-5052-00)* 50/60Hz 3W 3600 RPM CW	515-6531-00 *incl. Connector*
ID4: Independence Day	Alien Head Open/Close Movement	Servo Motor *(94322)*	041-5045-00 *MOTOR ONLY*
SPACE JAM (NO MOTOR USED)			
The Star Wars Trilogy - S.E.	X-Wing Left/Right Movement	Bowman Motor 24VAC *(041-5058-00)* 60Hz 3W 10 RPM CCW	515-6383-01 *incl. Connector*
The Lost World: Jurassic Park	Snagger & Center Link Lift Up/Down Movement	Multi Products Motor 20VDC *(041-5059-03)* 9 RPM Non-Directional	515-6715-03 *incl. Connector*
	Shaker	Johnson Motor *(Vibrator)* 10.5VDC 10 AMP 2950 RPM CW	041-5029-**00** *MOTOR ONLY*
The X-Files	X-File Cabinet Lift Up/Down Movement	Multi Products Motor 20VDC 9 RPM CCW	041-5057-00 *MOTOR ONLY*
Starship Troopers	Warrior Bug Forward/Reverse Movement	Haydon Switch & Instrument, Inc. Stepper Motor 12VDC 4.6W *(041-5062-00)*, Series 36000: 1.4"ø *(Non-Captive Shaft **not included**)* HSI #36864-12 *(Unipolar)* Travel per Step: .004 Step Angle: 15°	515-6794-00 *incl. Connector* **Requires 7" Shaft:** 530-5503-00
VIPER NIGHT DRIVIN' (NO MOTOR USED)			
Lost In Space	Spinning Disc with Magnet	Multi Products Motor 24VAC *(041-5046-00)* 50/60Hz 3W 325 RPM CCW	515-6347-00 *incl. Connector*
Godzilla	Shaker ‡	Multi #3811 0630 Motor (Vibrator) 12VDC 3100 RPM CW *(w/DRL PTS)* ‡	041-5029-**01** *MOTOR ONLY*
SOUTH PARK (NO MOTOR USED)			
Harley-Davidson® *1st through 3rd Editions*	Shaker ‡	Multi #3811 0630 Motor (Vibrator) 12VDC 3100 RPM CW *(w/DRL PTS)* ‡	041-5029-**01** *MOTOR ONLY*
	Motorcycle Lift Up/Down Movement	Autotrol 24VAC *(041-5072-02)* 20 RPM CCW	515-7025-00 *incl. Connector*
Striker Xtreme (NFL)	Goalie (Linebacker) Left to Right Movement	Multi #3590 12VDC *(041-5075-00)* 60 RPM	515-7071-00 *incl. Connector*
Sharkey's Shootout	Mystery Ball Rotating Movement	Hankscraft Motor Model-E 24VAC *(041-5076-00)* 50/60Hz 3W 20 RPM CW	515-7095-00 *incl. Connector*
High Roller Casino	Roulette Wheel Rotating Movement	Multi Products Motor 20VDC *(041-5078-00)* 17 RPM CCW	515-7153-00 *incl. Connector*
	Up/Dn. Ramp in Slot Mach. Lift Up/Down Movement	Haydon Switch & Instrument, Inc. Stepper Motor 12VDC 4.6W *(041-5062-00)*, Series 36000: 1.4"ø *(Non-Captive Shaft **not included**)* HSI #36864-12 *(Unipolar)* Travel per Step: .004 Step Angle: 15°	515-6794-00 *incl. Connector* **Requires Shaft 4¼":** 530-5503-01
Austin Powers™	Time Machine Rotating Movement	Multi Products Motor 24VAC *(041-5079-00)* 50/60Hz 20RPM CCW	515-7141-00 *incl. Connector*
	Laser Beam Left to Right Directional	Autotrol Motor 24VAC *(041-5081-00)* 50/60Hz 4W 10RPM Bi-Directional	515-7171-00 *incl. Connector*
	Dr. Evil Target Lift Up/Down Movement	Hankscraft Motor Model-E 24VAC *(041-5030-00)* 50/60Hz 6RPM CCW	515-5900-00 *incl. Connector*
Monopoly®	Mini-Flipper (Waterworks) Rotating Movement	Multi Prod. Motor & Gear Box #7000 EX00159A 20VDC 50/60Hz 85RPM CC/CCW	041-5083-00 *MOTOR ONLY*
Playboy	Triangular Billboard Rotating Movement	Autotrol Motor *(BD511 150-1387)* 24VAC 50/60Hz 12RPM Bi-Directional	041-5086-02 *MOTOR ONLY*
	Centerfold Mechanism Open/Close Movement	Multi Products *(3680)* Motor 12v DC 10/12 RPM CC/CCW	041-5075-04 *MOTOR ONLY*
	Tease Drop Screen Lift Up/Down Movement	Haydon Switch & Instrument, Inc. Stepper Motor 12VDC 4.6W *(041-5062-00)*, Series 36000: 1.4"ø *(Non-Captive Shaft **not included**)* HSI #36864-12 *(Unipolar)* Travel per Step: .004 Step Angle: 15°	515-6794-00 *incl. Connector* **Requires 7" Shaft:** 530-5503-00

‡ ***Please Note:*** *"-01" Shaker Motor is **Not Compatible** with old Shaker Motor 041-5029-**00** (Shaker Motor Assy. 515-5893-00).*
*THIS NEW MOTOR CAN ONLY BE USED IN NEW SHAKER MOTOR ASSY. 515-5893-**01**.*

Table continued on the next page.

Game Name	Function	Specifications	Part Number
ROLLERCOASTER TYCOON™ (NO MOTOR USED)			
THE SIMPSONS™ PINBALL PARTY (NO MOTOR USED)			
Terminator® 3: Rise of the Machines™	Backbox Ball Shooter Up/Down Movement	Multi Products Motor 24VAC *(041-5079-01)* 21 RPM CW	515-7317-00 *incl. Connector*
The Lord of the Rings™	Balrog *(Motor & Gate)* Open/Close Movement	Multi Prod. Motor 20VDC Series 600B *(or equiv.)* 50/60Hz 10 RPM Bi-Directional	041-5088-01 *MOTOR ONLY*
RIPLEY'S BELIEVE IT OR NOT!® (NO MOTOR USED)			
Elvis®	Elvis™ Front/Back Movement	Haydon Switch & Instrument, Inc. Stepper Motor 12VDC 10W *(041-5089-00)*, *(Non-Captive Shaft **not included**)* *HSI #46868-12-002*	500-6809-00 *incl. Connector* **Requires 7.25" Shaft:** 530-5658-00
	▶▶▶ **OPTIONAL** ◀◀◀ Shaker	Multi #3811 0630 Motor *(Vibrator)* 12VDC *(041-5029-**01**) 3100 RPM (w/DRL PTS)*	515-5893-01 *incl. Connector*
The Sopranos℠	Bada Bing! Girls x2 Rotating Posts Movement	Autotrol Synchronous Motor 24VAC 4W 50/60Hz 45.7/54.9 RPM Bi-Directional	041-5092-00 **w/1" Shaft + 12" Leads**
NASCAR® and [NDSE]	Back Panel Rotating *(Car)* Windmill *(Skill Ball Enter)*	Multi Products Motor & Gear Box 20VDC Model #8000 *(EX-04-073)* 10 RPM	041-5093-00 *MOTOR ONLY*
Grand Prix	Back Panel Rotating *(Car)* Windmill *(Skill Ball Enter)*	Multi Products Motor & Gear Box 20VDC Model #8000 *(EX-04-073)* 10 RPM	041-5093-00 *MOTOR ONLY*
World Poker Tour™ (WPT) (NO MOTOR USED)			
The Simpons™ Kooky Carnival	Bart on Skateboard Left/Right Movement	Multi Products Motor with Crank 24VAC *(041-5095-01)* 50/60Hz 3W 14 RPM	500-6947-01 *incl. Connector*
	Left & Right Ramps Up/Down Movement	Multi Products Motor 24VAC *(041-5048-01)* 50/60Hz 3W 15 RPM CCW *(Qty. 2 in game)*	515-7558-00 *incl. Connector*
	Shaker *(details in SKC Manual, Page **24**)*	Multi #3811 0630 Motor *(Vibrator)* 12VDC 3100 RPM *(w/DRL PTS)*	041-5029-**01** *MOTOR ONLY*
©Disney's Pirates of the Caribbean	Spinning Disk	Multi #3811**R** 0630 Motor *(Vibrator)* 12VDC *(041-5029-**04**)* 3100 RPM *(w/DRL PTS)* *-04 is RoHS compliant; can substitute with -01 domestic*	511-5024-04 *incl. Connector*
	Pirate Ship Sinking/Raising Movement	Multi Products Motor & Gear Box 24VDC Model #7000-DCM 12 RPM	041-5101-00 *MOTOR ONLY*
Family Guy™	Stewie Figurine Left & Right Movement	Stepper Motor NPM PF35T-48D4STD 5V RVB *(041-5102-00 Reference Only)*	511-5043-00 *incl. Connector*
Spider-Man™	Doc Ock, Sandman & 3-Bank Up/Down Movement	Sync. Motor 24VAC 50/60Hz 3W 12 RPM CW *(041-5103-00 Reference Only)*	511-5063-00 *incl. Connector*
	▶▶▶ **OPTIONAL** ◀◀◀ **Shaker Motor Kit** 502-5027-00	Multi #3811**R** 0630 Motor *(Vibrator)* 12VDC *(041-5029-**04**) 3100 RPM (w/DRL PTS)* *-04 is RoHS compliant; can substitute with -01 domestic*	515-5893-01 *incl. Connector*

APPENDIX F

Motor Specification Table

The following table only list games that used motors. *Part Numbers starting with "515-" will include the Wiring Harness & Connector.*

Game Name	Function	Specifications	Part №
ABC Monday Night Football	Goal Post Up/Down Movement	Motor 24v A.C. 60 RPM CW	515-5222-00
Phantom of the Opera	Organ Up/Down Movement	Bowman Motor 24v 60Hz 3W 11 RPM CCW	515-5256-00
Checkpoint	Mag Wheel (in Backbox)	Motor D.C. (KEN)	041-5005-00
	Shaker	Johnson Motor (Vibrator)	041-5002-00
Teenage Mutant Ninja Turtles	Spinning Pizza Ball Deflector	Gear Motor 24v A.C. 325 RPM CW	515-5397-00
Batman	Bar Target Up/Down Movement	Bowman Motor 24v 60Hz 3W 11 RPM CCW	515-5256-00
Star Trek 25th Anniversary	Swinging Target	Bowman Motor 24v 22½ RPM	515-5534-00
	Transporter F/X	Gear Motor 24v A.C. 3½ RPM	500-5421-00
	Cooling Fan (for Transporter F/X)	4½" Motor 12v	041-5014-00
Lethal Weapon 3	Spinning Light	Motor 2½ v A.C. 4000 RPM CCW	041-5017-00
Star Wars	Bar Target Up/Down Movement	Bowman Motor 24v 60hz 3W 11 RPM CCW	515-5256-00
	R2D2 Robot Left/Right Movement	Bowman Motor 24v A.C. 22½ RPM CW	515-5571-00
	Death Star Rotation	Bowman "G" Motor 24v A.C. 60Hz 6 RPM CW	515-5570-00
Rocky & Bullwinkle & Friends	Nell Log "Cutting Blade" Forward/Back Movement	Autotrol Model E Motor 24v 60hz 4W 3 RPM CCW	041-5023-00
Jurassic Park	T-Rex Left/Right Movement	Multi Motor 5v D.C.	041-5025-00
	T-Rex Up/Down Movement	Bowman Motor 24v 11 RPM CW	041-5026-00
	Shaker	Johnson Motor (Vibrator)	041-5002-00
Last Action Hero	Crane Left/Right Movement	Multi Products Motor 12v D.C. #3312 OSC	041-5027-00
	Shaker	Johnson Motor (Vibrator) 10.5v D.C. 10 AMP 2950 RPM CW	041-5029-00
Tales from the Crypt	Tombstone Up/Down Movement	Bowman Motor 24v A.C. 6 RPM CCW	515-5900-00
	Shaker	Johnson Motor (Vibrator) 10.5v D.C. 10 AMP 2950 RPM CW	041-5029-00
The Who's Tommy	Mirror Up/Down Movement	Bowman Motor 24v A.C. 6 RPM CCW	515-5900-00
	Flipper Blinders	Servo Motor (94102)	041-5032-00
	Spinning Airplane Propellers	Motor D.C.	041-5033-00
WWF Royal Rumble	Shaker	Johnson Motor (Vibrator) 10.5v D.C. 10 AMP 2950 RPM CW	041-5029-00
Maverick, The Movie	Turning Paddle Wheel	Motor 24v A.C. 10 RPM	041-5036-00
Mary Shelley's Frankenstein	Creature Head Left/Right Movement	Servo Motor (94102)	041-5032-00
Batman Forever	Cannon Left/Right Movement	Bowman Motor 24v A.C. 60Hz 3W 6 RPM CCW	515-6383-00

APPENDIX G

Part Number Prefix Classification Codes

I. Electrical Source, Energy & Signal Converters
- 010- Transformers
- 031- Speakers
- 090- Solenoids (Coils)
- 150- Filters, Outlets, Varistors, Thermistors
- 200- Fuses

II. Conductors, Connectors & Insulators
- 034- Line Cords
- 036- Cable Assemblies & Wiring Harnesses
- 041- Motors
- 045- Connectors (All Types)
- 055- Lugs (M/F), Pins (M/F), Discs, Ring Terminals, Terminal Strips, etc.
- 060- Polarizing Keys and Conn. Covers
- 077- Lamp Sockets

III. Circuits & Circuit Elements
- 100- ICs
- 110- Transistors
- 112- Diodes (All Types including LEDs & Modules)
- 121- Resistors
- 123- Resistors (Variable & Adjustable)
- 124- Regulators & Bridge Rectifiers
- 125- Capacitors (Radial Lytics & Ferrites)
- 126- Piezo Crystal
- 127- Heatsinks
- 130- Capacitors (Tecates & Ceramics)
- 140- Oscillators (Clocks/Crystals)
- 165- Light Bulbs
- 180- Switches
- 181- Switch Membranes (Pads) & Piezo Sensors
- 190- Relays
- 960- EPROM *(Raw Part)*
- 965- EPROM *(Programmed Part)*

IV. Bolts, Screws, Nuts, Washers & Nails
- 231- Bolts
- 232- Screws (Pan Head)
- 234- Screws (HWH)
- 237- Screws (Misc.)
- 240- Nuts (Misc.)
- 242- Washers (Flat, Round)
- 244- Washers (Split Lock)
- 245- Nyliners
- 246- Washers (Lockers, External Tooth)
- 281- Nails

V. Mechanical Components
- 249- Rivets
- 251- Pins (Dowel), Finishing Nails, Hairpins, Spring Pins and Clevis Pins
- 254- Stand-Offs, Spacers and Shims
- 260- Steel Ball (All Types Steel, Glowing, Delrin, etc.)
- 265- Springs (Extension)
- 266- Springs (Compression)
- 267- Springs (Torsion)
- 269- Springs (Washers - Belleville, Wave)
- 270- Retaining Rings
- 280- Grommets, Bushings and Nyliners
- 283- Bearings

VI. Handles, Locks, Catches, Latches, Keys
- 355- Handles, Locks, Catches, Latches and Keys

VII. Fabricated Parts
- 390- Hinges
- 501- Coin Doors
- 515- Sub-Assemblies
- 520- Printed Circuit Boards (PCBs)
- 522- Display Glass
- 525- Wood Parts
- 530- Screw Machined Parts
- 535- Fabricated Parts
- 545- Molded (Extruded) Plastic and Rubber Parts (Rings, Sleeves, etc.)
- 550- Molded (Inserts)

VIII. In-House Assemblies
- 500- End Product (Systems and Models)
- 502- Kits (Created In-House)
- 505- Cabinets (complete)
- 510- Riveted Sub-Assemblies (In-House)
- 511- Sub-Assemblies (In-House)
- 515- Sub-Assemblies*

  **2 or more 515-'s but still a sub-assembly.*

IX. Bulk Materials
- 600- Braided Wire & Ground Straps
- 601- Stranded Wire
- 602- Ribbon Cable
- 604- Telephone Line Cord
- 605- Sleeving (Shrink Tubing)
- 625- Velcro (non-adhesive)
- 626- Foam Rubber, Foam Pads, Rubber Bumpers (Blue Pads), Tape (All Types) Velcro (adhesive) and String / Rope

X. Miscellaneous
- 000- Tools *(see also 777-)* and Supplies
- 040- Clamps, Ties & Clips
- 042- Pulleys
- 091- Coin Mechs
- 205- Fuse Holders
- 631- Staples
- 660- Glass (Playfield, Backglass, etc.)
- 675- Cleaners
- 705- Packing & Shipping Items
- 755- Instruction, Coin Cards, Ins. Sheets
- 756- Information Sheets, Service Bulletins, Instruction Sheets in Kits and Templates
- 777- Tools (Wrenches and Drivers)
- 780- Manuals
- 802- Decal Kits (comprised of 820's)
- 820- Decals, Mylar and Labels (Sheets/Sets)
- 803- Plastic Kits (comprised of 830's)
- 830- Plastic Pieces (Butyrate Sheets/Sets)
- 880- Toys, Models, Figurines, etc.
- 900- Game Posters

APPENDIX H

Playfield Inserts (Plastic Light Covers)

Patterns: STARBURST **STIPPLE**	**STARBURST CIRCULAR** 5/8" ø **550-5000-XX**	**STARBURST CIRCULAR** 3/4" ø **550-5001-XX**	**STARBURST CIRCULAR** 1" ø **550-5002-XX**	**STARBURST CIRCULAR** 1-3/16" ø **550-5003-XX**	**STARBURST CIRCULAR** 1-1/2" ø **550-5004-XX**
STARBURST CIRCULAR 2-1/4" ø **550-5005-XX**	**STARBURST CIRCULAR** 2-3/4" ø **550-5006-XX**	**PLAIN CIRCULAR** 3/4" ø **550-5007-XX**	**PLAIN CIRCULAR** 1" ø **550-5008-XX**	**PLAIN CIRCULAR** 1-3/16" ø **550-5009-XX**	**PLAIN CIRCULAR** 1-1/2" ø **550-5010-XX**
PLAIN CIRCULAR 2-1/4" ø **550-5011-XX**	**PLAIN CIRCULAR** 2-3/4" ø **550-5012-XX**	**STIPPLE CIRCULAR** 1" ø **550-5048-XX**	**STIPPLE 1" SQUARE** 1" **550-5019-XX**	**ROLLOVER BUTTON BASE** **550-5026-XX**	**WHITE STAR** *(only in white)* **545-5015-00**
STIPPLE RECTANGULAR 1-1/2" X 3/4" **550-5018-XX**	**STIPPLE RECTANGULAR** 1-5/8" X 1-1/2" **550-5051-XX**	**STARBURST RECTANGULAR** 2-1/4" X 1-1/8" **550-5044-XX**	**PLAIN RECTANGULAR** 2-1/4" X 1-1/8" **550-5049-XX**	**PLAIN RECTANGULAR** 1-1/4" X 1-1/2" **550-5050-XX**	**PLAIN RECTANGULAR** 2" X 2-1/2" **550-5063-XX**
STARBURST MINI SHIELD 1" X 1" **550-5024-XX**	**STARBURST LARGE SHIELD** **550-5025-XX**	**MINI HOT DOG** 1-5/8" **550-5020-XX**	**BEVEL HOT DOG** 3-1/2" **550-5021-XX**	**PLAIN HOT DOG** 3-1/2" **550-5022-XX**	**BANANA** **550-5023-XX**
STARBURST ARROW-SMALL **550-5013-XX**	**STARBURST ARROW-LARGE** **550-5070-XX**	**STARBURST ARROW-HEAD SMALL** **550-5014-XX**	**STARBURST ARROW-HEAD LARGE** **550-5015-XX**	**STARBURST BULLET** **550-5016-XX**	**STARBURST TRIANGLE** **550-5017-XX**

Note: *The shapes and sizes shown above are not to scale. Some shapes may no longer be available in every color.*

Instructions: Parts which may come in various colors (i.e. targets, some posts, playfield inserts, etc.) end in a 2-digit number which correspond to the color of that part. The "**-XX**" in part number which may come in various colors should be replaced with the desired 2-Digit number corresponding to the color desired below. *Not all colors may be available.*

PLASTIC PART COLOR CHART

Nº	Color	Nº	Color	Nº	Color	Nº	Color	Nº	Color	Nº	Color
-00	**Black** or Solid Clear	-03	Amber	-06	Yellow	-09	Purple	-12	Fluor. Blue	-15	Luminescent
-01	Clear	-04	Green	-07	Orange	-10	Fluor. Orange	-13	Teal Green	-16	Gold
-02	Red	-05	Blue	-08	White	-11	Fluor. Green	-14	Gray	-17	Trans. Brown

APPENDIX I

Stand-Up Targets

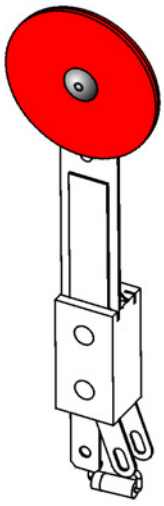

112-5003-00
Switch Diode, 1N4004
(all Stand-Up Targets)

515-5966-XX
1" ROUND STAND-UP
SWITCH & TARGET
RIVETED ASSEMBLY*

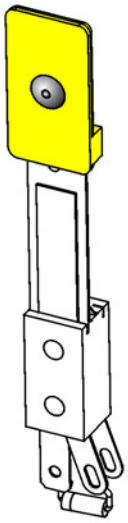

STANDARD / ANTI-LOFT
515-5967-XX *or* **515-7581-XX**
1" X 1/2" NARROW STAND-UP
SWITCH & TARGET
RIVETED ASSEMBLY*

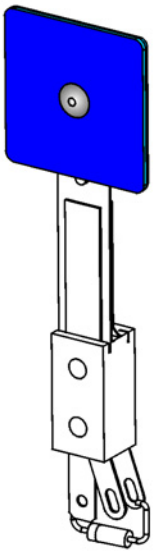

515-5162-XX
1" X 1" SQUARE STAND-UP
SWITCH & TARGET
RIVETED ASSEMBLY*

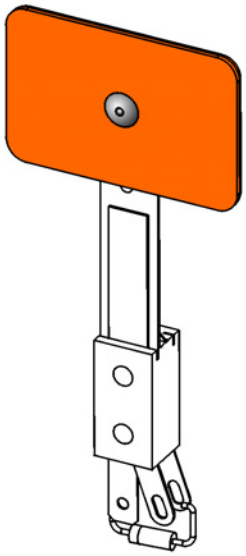

515-6027-XX
1" X 1-1/2" RECTANGLE STAND-UP
SWITCH & TARGET
RIVETED ASSEMBLY*

**Note: Does not include the Switch Back Plate, Mounting Bracket or screws.*

To include the Switch Back Plate, Foam Pad, and Switch Mounting Bracket assembled, use the follow assembly part numbers (replace the -XX with 2-digit number from chart):

500-5835-XX : 1" ROUND TARGET
500-5857-XX : 1" X 1/2" NARROW TARGET
500-6985-XX : 1" X 1/2" ANTI-LOFT TARGET
500-5232-XX : 1" X 1" SQUARE TARGET
500-5321-XX : 1" X 1-1/2" RECT. TARGET

REAR VIEW 515-5967-06 SHOWN

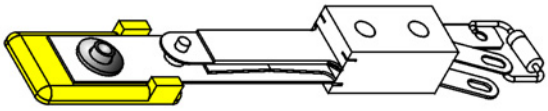

SHOWN BELOW : 500-5857-06
1" X 1/2" NARROW STAND-UP
TARGET ASSEMBLY COMPLETE

626-50**29**-00
Foam Pad, Square
.44" X .44" X .125" Thick (Self-Adhesive)**

*** Note:*
Use with all Switch & Targets THIS page except for 515-7581-XX.

535-6896-00
Bracket, Switch Mounting
(all targets THIS page)

237-5976-05
#6-32 X 3/4" SHWH Sc.
(all targets THIS page)

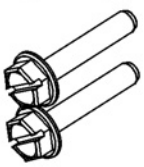

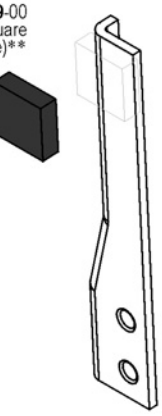

535-**6452-00**
Switch Back Plate**

515-5967-XX
1" X 1/2" NARROW
STAND-UP (STANDARD)
SWITCH & TARGET
RIVETED ASSEMBLY*

-XX REPLACE WITH 2-DIGIT FOR COLOR:
-00 Black
-01 Clear
-02 Red
-03 Amber
-04 Green
-05 Blue
-06 Yellow
-07 Orange
-08 White
-09 Purple
-10 Fluor. Orange
-11 Fluor. Green
-12 Fluor. Blue
-13 Teal Green
-14 Gray
-15 Luminescent
-16 Gold
Note: Not all colors available.

SHOWN BELOW : 500-6985-04
1" X 1/2" NARROW ANTI-LOFT
STAND-UP TARGET
ASSEMBLY COMPLETE

626-**5069**-00
Foam Pad, Rectangle
.6" X .4" X .25" Thick (Self-Adhesive) ‡

535-**9823-01**
Switch Back Plate ‡

‡ Note: *Use only with 515-7581-XX Switch & Target Assembly unless otherwise noted.*

535-6896-00
Bracket, Switch Mounting
(all targets THIS page)

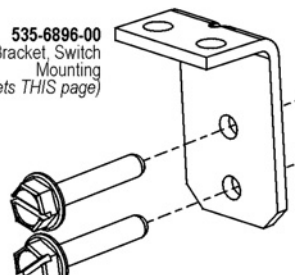

237-5976-05
#6-32 X 3/4" SHWH Sc.
(all targets THIS page)

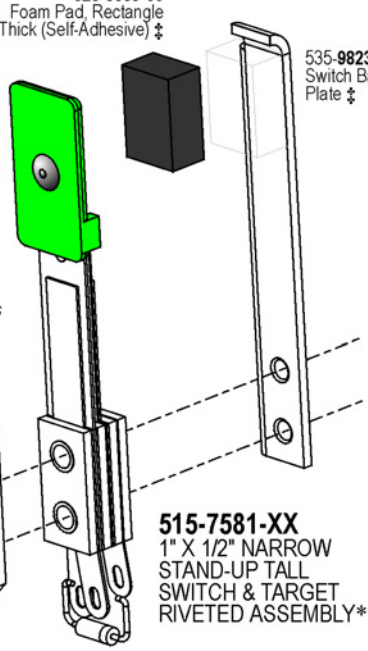

515-7581-XX
1" X 1/2" NARROW
STAND-UP TALL
SWITCH & TARGET
RIVETED ASSEMBLY*

ORDERING NOTE: 515-7581-XX *(500-6985-XX) differences from* ***515-5967-XX*** *(500-5857-XX) are:*

1. Switch & Target Taller *(Target sits higher over P/F)*
2. Switch Back Plate differs *(bend, shape & tab)*
3. Foam Pad differs *(thicker, taller, different type foam)*

**Note: Does not include the Switch Back Plate, Mounting Bracket or screws.*

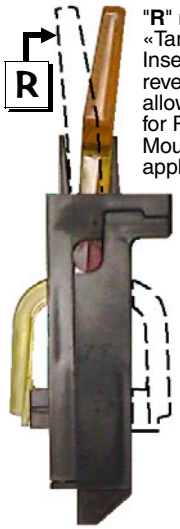

"**R**" means «Target Insert» is reversed, allowing for Rear Mounted application.

-XX REPLACE WITH 2-DIGIT FOR COLOR:
-00 Black
-01 Clear
-02 Red
-03 Amber
-04 Green
-05 Blue
-06 Yellow
-07 Orange
-08 White
-09 Purple
-10 Fluor. Orange
-11 Fluor. Green
-12 Fluor. Blue
-13 Teal Green
-14 Gray
-15 Luminescent
-16 Gold
Note: Not all colors available.

Take Note:

1. **Items A-E** come in various colors. *These targets may not be available in every color.* The "**-XX**" in should be replaced with the desired 2-Digit number for the color desired as described in the Color Chart below. *As of print date, the following colors were used :*
-01 Clear (A, D); **-02** Red (A, B, C, D, E); **-03** Amber (D, E); **-04** Green (A, B); **-05** Blue (C); **-06** Yellow (A, C), **-09** Purple (B, D); **-11** Fluorescent Green (A, B, D)
2. *For location(s) and type of Stand-Up Targets used, if any, see Section **4**, Chapter **1**, Parts Identification & Location.*

Nr.	STAND-UP TARGET PARTS	SPI PART Nr.
A	Modular Stand-Up Target Narrow Assy.	500-6138-XX
	Stand-Up Target Narrow (Insert)	**545-6138-XX**
B	Modular Stand-Up Target Square Assy.	500-6139-XX
	Stand-Up Target Square (Insert)	**545-6139-XX**
C	Modular Stand-Up Target Rectangle Assy.	500-6228-XX
	Stand-Up Target Rectangle (Insert)	**545-6228-XX**
D	Modular Stand-Up Target Round Assy.	500-6075-XX
	Stand-Up Target Round (Insert)	**545-6075-XX**
E	Mod. Stand-Up Target 1" Spherical Assy.	500-6189-XX
	Stand-Up Target 1" Spherical (Insert)	**545-6189-XX**

To Replace the « Target Insert » or change Target Orientation :

Items A-E Note: For the Target Assembly use the "**500-**" SPI Part Number(s) shown in the Parts Table below. To receive the Target Assembly with the « Target Insert » « ***R**eversed » simply add a **"R"** at the end of the Part Number. See Side View picture left to compare (dashed line shows target reversed).* For just the «Target Insert» use the "**545-**" SPI Part Number.

To reverse it yourself or to just change the insert:

1. With a small flat head screwdriver, push into the small tab at the bottom of the target front and give a slight twist motion to "pop" the two halves.

2. Push the Target Insert bottom in at the same time while you slide the top (front) part up, then let go of the insert as the two halves come apart.

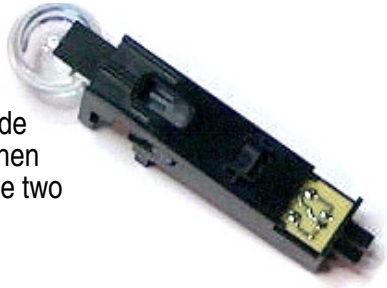

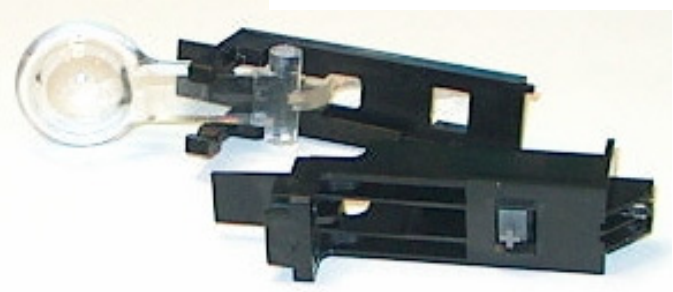

3. Replace target or reinsert it into the other size while sliding the two halves back together.

Note: *If you were reversing the orientation, don't forget to also turn the Switch Actuator PCB **180°**. Test Switch.*

APPENDIX J

Coin Cards (USA & International Pricing Defaults) ▶ For Yellow Stock add -Y to the Part Number

*If more than one Pricing Scheme is available for countries listed, the **F.** listed beside the option, denotes the Factory Default Setting.*

FOR VIEWS OF THE LATEST or OPTIONAL USA, INTERNATIONAL / EURO AND CUSTOM COIN CARDS, VISIT OUR WEBSITE.

Not Shown USA 755-5400-10 Tournament Option $2 = X1; 755-5400-11 Tournament Option $1.50 = X1

USA 10 *F.*	USA 10	USA 2-7 *or* CANADA	*FOR CUSTOM PRICING* †	USA 3 *with* ToPS™	USA 5 *with* ToPS™
NON-TOURNAMENT PLAY $ .75=x1 $2.00=x3 TOURNAMENT PLAY! $1.50=x1	75¢=x1 SUPER VALUE $2.00=x3	50¢=x1	Backside is Blank (Border Only) *Typeset your Custom Pricing*	NON-TOURNAMENT PLAY $ .50=x1 $1.00=x2 TOURNAMENT PLAY! $1.00=x1	NON-TOURNAMENT PLAY $ .50=x1 $2.00=x5 TOURNAMENT PLAY! $1.00=x1
755-5400-11 *Front*	755-5400-11 *Back*	755-5400-02 *Front*	755-5400-01, -02 *or* -04 *Back*	755-5400-03 *or* -09 *Front*	755-5400-03 *Back / -08 Front*

AUSTRALIA 1 *F.*	AUSTRALIA 2	CROATIA	*FOR CUSTOM PRICING* †	DENMARK 1 *F.*	DENMARK 2
$1.00=x1 SUPER VALUE $2.00=x3	$1.00=x1	3 KUNA=x1 5 KUNA=x2	Backside is Blank (Border Only) *Typeset your Custom Pricing*	Kr.3,00=x1 Kr.5,00=x2	Kr.2,00=x1 Kr.5,00=x3 Kr.10,00=x7
755-5406-00 *Front*	755-5406-00 *Back*	755-5410-00 *Front*	755-5410-00 *Back*	755-5402-00 *Front*	755-5402-00 *Back*

JAPAN 1	JAPAN 2 *F.*	MIDDLE EAST	*ANY COUNTRY CAN USE*	NEW ZEALAND 1 *F.*	NEW ZEALAND 2
¥100=x1	¥100=x1 ¥200=x3	TOKEN=x1	COIN=x1	$1.00=x1	$1.00=x1 SUPER VALUE $2.00=x3
755-5408-01 *Front*	755-5408-01 *Back*	755-5400-06 *Front*	*755-5400-06 Back*	*755-5406-00 Back*	755-5406-00 *Front*

NORWAY 1 *F.*	NORWAY 2	RUSSIA *F.*	RUSSIA (ALTERNATE)	SOUTH AFRICA	*FOR CUSTOM PRICING* †
Kr. 10,00=x1	Kr. 10,00=x1 Kr.20,00=x3	5 Рублей=x1	Жетон=x1	R2=x1	Backside is Blank (Border Only) *Typeset your Custom Pricing*
755-5403-01 *Front*	755-5403-01 *Back*	755-5411-00 *Front*	755-5411-00 *Back*	755-5409-01 *Front*	755-5409-01 *Back*

SWEDEN 1 *F.*	SWEDEN 2	SWITZERLAND 1 *F.*	SWITZERLAND 2	TAIWAN	*FOR CUSTOM PRICING* †
10,00 kr.=x1 15,00 kr.=x2 20,00 kr.=x3	5,00 kr.=x1	sf 1,00=x1 sf 5,00=x6	sf 1,00=x1 sf 2,00=x3 sf 5,00=x9	TWD10=x1	Backside is Blank (Border Only) *Typeset your Custom Pricing*
755-5404-00 *Front*	755-5404-00 *Back*	755-5405-00 *Front*	755-5405-00 *Back*	755-5412-00 *Front*	755-5412-00 *Back*

UK 1	UK 3	UK 5 *F.*	*FOR CUSTOM PRICING* †
£1.00=x3 £2.00=x7	£ .50=x1 £1.00=x2 £2.00=x5	£1.00=x1 £2.00=x3	Backside is Blank (Border Only) *Typeset your Custom Pricing*
755-5407-00 *Front*	755-5407-00 *Back*	755-5407-01 *Front*	755-5407-01 *Back*

Appendix J Notes:

1. Coin Card on Game is determined by original shipping country destination.
2. Optional Coin Card(s), are available via your distributor or via free download @ www.sternpinball.com/**coinagecards.shtml**.

Older style Coin Cards (foreign or domestic) not available on our website or no longer available through your distributor, are obsolete.

3. Coin Cards which have a Blank Backside *can be used for* †***Custom Pricing***.

Not Shown EURO 755-5401-20 Tournament Custom (can fill in your own pricing).

EURO 1	EURO 2	EURO 3	EURO 4	EURO 5	EURO 6
€ .50=x1	€ .50=x1 €1.00=x2 €2.00=x5	€ .50=x1 €1.00=x3	€ .50=x1 €1.00=x2 €2.00=x6	€ .50=x1 €1.00=x3 €2.00=x7	€ .50=x2
755-5401-01 *1-Side Only*	755-5401-02 *1-Side Only*	755-5401-03 *1-Side Only*	755-5401-04 *1-Side Only*	755-5401-05 *1-Side Only*	755-5401-06 *1-Side Only*

EURO 7	EURO 8	EURO 9	EURO 10	EURO 11	EURO 12
€1.00=x1 €4.00=x5	€1.00=x1 €2.00=x3	€1.00=x1 €1.50=x2 €2.00=x3	€1.00=x1 €2.00=x3 €3.00=x7	€1.00=x1 €2.00=x4	€1.00=x2 €4.00=x9
755-5401-07 *1-Side Only*	755-5401-08 *1-Side Only*	755-5401-09 *1-Side Only*	755-5401-10 *1-Side Only*	755-5401-11 *1-Side Only*	755-5401-12 *1-Side Only*

◣ EURO FACTORY DEFAULT SUMMARY TABLE ◢

EURO 1	EURO 2	EURO 3	EURO 4	EURO 5	EURO 6	EURO 7	EURO 8	EURO 9	EURO 10	EURO 11	EURO 12
BELGIUM ITALY 1 PORTUGAL	*GERMANY 2*	*NETHERLANDS SPAIN*			*GREECE*		*FINLAND*	*AUSTRIA*	*FRANCE*		

Section ***3***, *Chapter* ***4***, ***GO TO ADJUSTMENTS MENU***, *Adj.* ***18***, ***Game Pricing***, ***USA & International (non-Euro) and Euro 1-12 Summary & International (Euro) Standard Pricing Select Tables***, *summarizes Standard or Custom Pricing Schemes & the Dip Switch Setting required.*

APPENDIX A

Pinball Game Firmware (White Star Board System* Only) Table

See website for the latest International Code or Updated USA version / checksums

ROM	Chip Size	Program Part Nº	USA Ver. & Check Sum	Bd. Loc.	Raw Part Nº
Apollo 13 (Note 1)					
Game ROM	(1M)	965-0208-00	**A5.01 | $09FF**	**U210**	960-5009-00
Sound	(512K)	965-0212-00	1.00 | $5244	U7	960-7001-02
Display	(4M)	965-0213-00	**A5.00 | $B92B**	**ROM 0**	960-5015-01
Voice 1	(4M)	965-0209-00	1.00 | $7FC7	U17	n/a (masked)
Voice 2	(4M)	965-0210-00	1.00 | $8E55	U21	n/a (masked)
Voice 3	(4M)	965-0211-00	1.00 | $08EE	U36	n/a (masked)
Golden Eye (Note 1)					
Game ROM	(1M)	965-0214-42	**A4.04 | $3FFF**	**U210**	960-5009-00
Sound	(512K)	965-0217-42	1.00 | $D615	U7	960-7001-02
Display	(4M)	965-0218-42	**A4.00 | $E6ED**	**ROM 0**	960-5015-01
Voice 1	(4M)	965-0215-42	1.00 | $3E32	U17	n/a (masked)
Voice 2	(4M)	965-0216-42	1.00 | $71F0	U21	n/a (masked)
Twister (Note 2)					
Game ROM	(1M)	965-0219-41	**A4.05 | $E9FF**	**U210**	960-5009-00
Sound	(512K)	965-0221-41	1.00 | $1FFF	U7	960-7001-02
Display	(4M)	965-0222-41	**A4.00 | $FD01**	**ROM 0**	960-5015-01
Voice 1	(4M)	965-0220-41	1.00 | $3650	U17	960-5015-01
Voice 2	(4M)	965-0223-41	1.00 | $9300	U21	960-5015-01
ID4: Independence Day (Note 2)					
Game ROM	(1M)	965-0224-45	**A2.02 | $9CFF**	**U210**	960-5009-00
Sound	(512K)	965-0227-45	1.00 | $222B	U7	960-7001-02
Display	(4M)	965-0228-45	**A2.00 | $ABF7**	**ROM 0**	960-5015-01
Voice 1	(4M)	965-0225-45	1.00 | $3AE1	U17	960-5015-01
Voice 2	(4M)	965-0226-45	1.00 | $206E	U21	960-5015-01
Space Jam (Note 2)					
Game ROM	(1M)	965-0229-43	**A3.00 | $E6FF**	**U210**	960-5009-00
Sound	(512K)	965-0233-43	1.00 | $F1E7	U7	960-7001-02
Display	(4M)	965-0234-43	**A3.00 | $0057**	**ROM 0**	960-5015-01
Voice 1	(4M)	965-0230-43	1.00 | $DBA8	U17	960-5015-01
Voice 2	(4M)	965-0231-43	1.00 | $DDF1	U21	960-5015-01
Voice 3	(4M)	965-0232-43	1.00 | $F32A	U36	960-5015-01
The Star Wars Trilogy - Special Edition (S.E.) (Note 2)					
Game ROM	(1M)	965-0235-56	**A4.03 | $5EFF**	**U210**	960-5009-00
Sound	(512K)	965-0238-56	1.00 | $4A7D	U7	960-7001-02
Display	(4M)	965-0239-56	**A4.00 | $8817**	**ROM 0**	960-5015-01
Voice 1	(4M)	965-0236-56	1.00 | $E66B	U17	960-5015-01
Voice 2	(4M)	965-0237-56	1.00 | $8F54	U21	960-5015-01
The Lost World: Jurassic Park (Note 2)					
Game ROM	(1M)	965-0240-53	**A2.02 | $C8FF**	**U210**	960-5009-00
Sound	(512K)	965-0243-53	1.00 | $A35B	U7	960-7001-02
Display	(4M)	965-0244-53	**A2.01 | $7F46**	**ROM 0**	960-5015-01
Voice 1	(4M)	965-0241-53	1.00 | $1D27	U17	960-5015-01
Voice 2	(4M)	965-0242-53	1.00 | $8DA4	U21	960-5015-01
The X-Files (Note 2)					
Game ROM	(1M)	965-0245-46	**A3.03 | $A2FF**	**U210**	960-5009-00
Sound	(512K)	965-0248-46	1.00 | $6648	U7	960-7001-02
Display	(4M)	965-0249-46	**A3.00 | $66D0**	**ROM 0**	960-5015-01
Voice 1	(4M)	965-0246-46	1.00 | $349D	U17	960-5015-01
Voice 2	(4M)	965-0247-46	1.00 | $629C	U21	960-5015-01
Starship Troopers (Note 3)					
Game ROM	(1M)	965-0250-59	**A2.00 | $85FF**	**U210**	960-5009-00
Sound	(512K)	965-0253-59	1.00 | $64B2	U7	960-7001-02
Display	(4M)	965-0254-59	**A2.00 | $E77B**	**ROM 0**	960-5015-01
Voice 1	(4M)	965-0251-59	1.00 | $152A	U17	960-5015-01
Voice 2	(4M)	965-0252-59	1.00 | $0291	U21	960-5015-01
Voice 3	(4M)	965-0255-59	1.00 | $95A7	U36	960-5015-01
Viper Night Drivin' (Note 4)					
Game ROM	(1M)	965-0266-35	**A2.01 | $C5FF**	**U210**	960-5009-00
Sound	(512K)	965-0271-35	1.00 | $4DF8	U7	960-7001-02
Display	(4M)	965-0272-35	**A2.01 | $C17D**	**ROM 0**	960-5015-01
Voice 1	(4M)	965-0267-35	1.00 | $8018	U17	960-5015-01
Voice 2	(4M)	965-0268-35	1.00 | $2157	U21	960-5015-01
Voice 3	(4M)	965-0269-35	1.00 | $B5A6	U36	960-5015-01
Voice 4	(4M)	965-0270-35	1.00 | $D01E	U37	960-5015-01
Lost In Space (Note 4)					
Game ROM	(1M)	965-0282-60	**A1.01 | $B2FF**	**U210**	960-5009-00
Sound	(512K)	965-0287-60	1.00 | $A6AF	U7	960-7001-02
Display	(4M)	965-0288-60	**A1.02 | $32AB**	**ROM 0**	960-5015-01
Voice 1	(4M)	965-0283-60	1.00 | $4391	U17	960-5015-01
Voice 2	(4M)	965-0284-60	1.00 | $8215	U21	960-5015-01
Voice 3	(4M)	965-0285-60	1.00 | $5B32	U36	960-5015-01
Voice 4	(4M)	965-0286-60	1.00 | $8971	U37	960-5015-01
Godzilla (Note 4)					
Game ROM	(1M)	965-0289-40	**A2.05| $B1FF**	**U210**	960-5009-00
Sound	(512K)	965-0294-40	1.00 | $0CC8	U7	960-7001-02
Display	(4M)	965-0295-40	**A2.00 | $C929**	**ROM 0**	960-5015-01
Voice 1	(4M)	965-0290-40	1.00 | $0D75	U17	960-5015-01
Voice 2	(4M)	965-0291-40	1.00 | $CCCF	U21	960-5015-01
Voice 3	(4M)	965-0292-40	1.00 | $227F	U36	960-5015-01
Voice 4	(4M)	965-0293-40	1.00 | $DB69	U37	960-5015-01
South Park (Notes 4, 5)					
Game ROM	(1M)	965-0301-71	**A1.03 | $58FF**	**U210**	960-5009-00
Sound	(512K)	965-0306-71	1.00 | $1286	U7	960-7001-02
Display	(4M)	965-0307-71	**A1.01 | $166F**	**ROM 0**	960-5015-01
Voice 1	(8M)	965-0302-71	1.00 | $7BF8	U17	960-5016-00
Voice 2	(8M)	965-0303-71	1.00 | $9CCC	U21	960-5016-00
Voice 3	(8M)	965-0304-71	1.00 | $ADD9	U36	960-5016-00
Voice 4	(8M)	965-0305-71	1.00 | $6659	U37	960-5016-00
Harley-Davidson® (Notes 4, 5, 6) *Original (1999-2001)*					
Game ROM	(1M)	965-0319-67	**A1.03 | $3EFF**	**U210**	960-5009-00
Sound	(512K)	965-0320-67	1.00 | $F4FF	U7	960-7001-02
Display	(4M)	965-0321-67	**A1.04 | $FC7C**	**ROM 0**	960-5015-01
Voice 1	(8M)	965-0322-67	1.00 | $CD26	U17	960-5016-00
Voice 2	(8M)	965-0323-67	1.00 | $9396	U21	960-5016-00
Voice 3	(8M)	965-0324-67	1.00 | $FB72	U36	960-5016-00
Voice 4	(4M)	965-0325-67	1.00 | $6100	U37	960-5015-01
▶ **Harley-Davidson® (Notes 4, 5, 6, 8) *2nd Edition (2002-2003)***					
Game ROM	(1M)	965-0319-67**A**	**A1.08 | $23FF**	**U210**	960-5009-00
Display	(4M)	965-0321-67**A**	**A1.05 | $B594**	**ROM 0**	960-5015-01
▶ **Harley-Davidson® (Notes 4, 5, 6, 8) *3rd Edition (2004)***					
Game ROM	(1M)	965-0319-87	**A4.00 | $1CFF**	**U210**	960-5009-00
Display	(4M)	965-0321-87	**A4.00 | $F4FF**	**U5**	960-5015-01
Striker Xtreme (Notes 4, 5)					
Game ROM	(1M)	965-0326-68	**A1.03 | $E4FF**	**U210**	960-5009-00
Sound	(512K)	965-0327-68	1.00 | $3BCA	U7	960-7001-02
Display	(4M)	965-0328-68	**A1.03 | $1957**	**ROM 0**	960-5015-01
Voice 1	(8M)	965-0329-68	1.00 | $482A	U17	960-5016-00
Voice 2	(8M)	965-0330-68	1.00 | $7312	U21	960-5016-00
Voice 3	(8M)	965-0331-68	1.00 | $DE2F	U36	960-5016-00
Voice 4	(8M)	965-0332-68	1.00 | $C508	U37	960-5016-00
NFL (Notes 4, 5) *Not on CD-R or Website: Code through Distributor Only.*					
Game ROM	(1M)	965-0339-73	**A1.00 | $D2FF**	**U210**	960-5009-00
Sound	(512K)	965-0340-73	1.00 | $	U7	960-7001-02
Display	(4M)	965-0341-73	**A1.01 | $845A**	**ROM 0**	960-5015-01
Voice 1	(8M)	965-0342-73	1.00 | $	U17	960-5016-00
Voice 2	(8M)	965-0343-73	1.00 | $	U21	960-5016-00
Voice 3	(8M)	965-0344-73	1.00 | $	U36	960-5016-00
Voice 4	(8M)	965-0345-73	1.00 | $	U37	960-5016-00
Sharkey's Shootout (Notes 4, 5)					
Game ROM	(1M)	965-0333-72	**A2.11 | $49FF**	**U210**	960-5009-00
Sound	(512K)	965-0334-72	1.01 | $9796	U7	960-7001-02
Display	(4M)	965-0335-72	**A2.01 | $6C33**	**ROM 0**	960-5015-01
Voice 1	(8M)	965-0336-72	1.00 | $58EA	U17	960-5016-00
Voice 2	(8M)	965-0337-72	1.00 | $272B	U21	960-5016-00
Voice 3	(8M)	965-0338-72	1.00 | $41AE	U36	960-5016-00
High Roller Casino (Notes 4, 5)					
Game ROM	(1M)	965-0346-65	**A3.00 | $90FF**	**U210**	960-5009-00
Sound	(512K)	965-0347-65	1.00 | $581C	U7	960-7001-02
Display	(4M)	965-0348-65	**A3.00 | $74B3**	**ROM 0**	960-5015-01
Voice 1	(8M)	965-0349-65	1.00 | $E12D	U17	960-5016-00
Voice 2	(8M)	965-0350-65	1.00 | $38F4	U21	960-5016-00
Voice 3	(8M)	965-0351-65	1.00 | $1B54	U36	960-5016-00
Voice 4	(8M)	965-0352-65	1.00 | $D720	U37	960-5016-00
Austin Powers™ (Notes 4, 5)					
Game ROM	(1M)	965-0353-74	**A3.02 | $5DFF**	**U210**	960-5009-00
Sound	(512K)	965-0354-74	1.00 | $DA7B	U7	960-7001-02
Display	(4M)	965-0035-74	**A3.00 | $6A34**	**ROM 0**	960-5015-01
Voice 1	(8M)	965-0356-74	1.00 | $D2B9	U17	960-5016-00
Voice 2	(8M)	965-0357-74	1.00 | $9E75	U21	960-5016-00
Voice 3	(8M)	965-0358-74	1.00 | $51F3	U36	960-5016-00
Voice 4	(8M)	965-0359-74	1.00 | $0AE5	U37	960-5016-00
MONOPOLY® (Notes 4, 5)					
Game ROM	(1M)	965-0360-75	**A3.20 | $07FF**	**U210**	960-5009-00
Sound	(512K)	965-0361-75	1.00 | $8C18	U7	960-7001-02
Display	(4M)	965-0362-75	**A3.01 | $A381**	**ROM 0**	960-5015-01
Voice 1	(8M)	965-0363-75	1.00 | $35E6	U17	960-5016-00
Voice 2	(8M)	965-0364-75	1.00 | $B35A	U21	960-5016-00
Voice 3	(8M)	965-0365-75	1.00 | $8A9F	U36	960-5016-00
Playboy (Notes 4, 5, 7)					
Game ROM	(1M)	965-0367-76	**A5.00 | $7DFF**	**U210**	960-5009-00
Sound	(512K)	965-0368-76	1.02 | $E7C2	U7	960-7001-02
Display	(4M)	965-0369-76	**A5.00 | $A5FF**	**ROM 0**	960-5015-01
Voice 1	(8M)	965-0370-76	1.00 | $9ABE	U17	960-5016-00
Voice 2	(8M)	965-0371-76	1.00 | $9F34	U21	960-5016-00
Voice 3	(8M)	965-0372-76	1.00 | $374B	U36	960-5016-00
Voice 4	(8M)	965-0373-76	1.00 | $237A	U37	960-5016-00
RollerCoaster Tycoon™ (Notes 4, 5, 7)					
Sound	(512K)	965-0374-78	1.00 | $F663	U7	960-7001-02
Game ROM	(1M)	965-0375-78	**A7.02| $E5FF**	**U210**	960-5009-00
Voice 1	(8M)	965-0377-78	1.00 | $3C4A	U17	960-5016-00
Voice 2	(8M)	965-0378-78	1.00 | $057A	U21	960-5016-00
Voice 3	(8M)	965-0379-78	1.00 | $04D7	U36	960-5016-00
Display	(4M)	965-0376-78	**A7.01 | $8DDB**	**U5** Disp. Cntrlr.	
The Simpsons™ Pinball Party (Notes 4, 5, 7)					
Sound	(512K)	965-0381-77	1.01 | $A7EE	U7	960-7001-02
Game ROM	(1M)	965-0382-77	**A4.00 | $4FFF**	**U210**	960-5009-00
Voice 1	(8M)	965-0383-77	1.00 | $9719	U17	960-5016-00
Voice 2	(8M)	965-0384-77	1.00 | $16ED	U21	960-5016-00
Voice 3	(8M)	965-0385-77	1.00 | $ADCE	U36	960-5016-00
Voice 4	(8M)	965-0386-77	1.00 | $E7E5	U37	960-5016-00
Display	(4M)	965-0387-77	**A4.00 | $8A03**	**U5** DC PCB	960-5015-01
Terminator® 3: Rise of the Machines™ (Notes 4, 5, 7)					
Sound	(512K)	965-0388-79	1.00 | $D2FD	U7	960-7001-02
Game ROM	(1M)	965-0389-79	**A4.00 | $F8FF**	**U210**	960-5009-00
Voice 1	(8M)	965-0390-79	1.00 | $1838	U17	960-5016-00
Voice 2	(8M)	965-0391-79	1.00 | $F0D5	U21	960-5016-00
Voice 3	(8M)	965-0392-79	1.00 | $89DA	U36	960-5016-00
Voice 4	(8M)	965-0393-79	1.00 | $1200	U37	960-5016-00
Display	(4M)	965-0394-79	**A4.00 | $6E49**	**U5** DC PCB	960-5015-01
The Lord of the Rings™ (Notes 7, 8)					
Sound	(512K)	965-0401-80	1.01 | $36BC	U7	960-7001-02
Game ROM	(1M)	965-0402-80	**A10.00 | $84FF**	**U210**	960-5009-00
Voice 1	(8M)	965-0403-80	1.00 | $1792	U17	960-5016-00
Voice 2	(8M)	965-0404-80	1.00 | $67F1	U21	960-5016-00
Voice 3	(8M)	965-0405-80	1.00 | $89B6	U36	960-5016-00
Voice 4	(8M)	965-0406-80	1.00 | $EA49	U37	960-5016-00
Display	(4M)	965-0407-80	**A10.00 | $1669**	**U5** DC PCB	960-5015-01

Sound & Voice 1-4 identical to above H-D® Original.

footnotes : 1 — 8 *see the bottom of the next page (**A2**).*

APPENDIX A

Pinball Game Firmware (White Star Board System* & S.A.M. System** Only) Table

See website for the latest International Code or Updated USA version / checksums

Ripley's Believe It or Not!® (Notes 7, 8)

ROM	Chip Size	Program Part Nº	USA Ver. & Check Sum	Bd. Loc.	Raw Part Nº
Sound	(512K)	965-0408-81	1.00 | $D93D	U7	960-7001-02
Game ROM	(1M)	965-0409-81	**A3.20 | $43FF**	**U210**	960-5009-00
Voice 1	(8M)	965-0410-81	1.00 | $067B	U17	960-5016-00
Voice 2	(8M)	965-0411-81	1.00 | $C8B8	U21	960-5016-00
Voice 3	(8M)	965-0412-81	1.00 | $64C2	U36	960-5016-00
Voice 4	(8M)	965-0413-81	1.00 | $5341	U37	960-5016-00
Display	(4M)	965-0414-81	**A3.00 | $DE4B**	**U5** DC PCB	960-5015-01

Elvis® (Notes 7, 8)

Sound	(512K)	965-0415-84	1.00 | $8CD2	U7	960-7001-02
Game ROM	(1M)	965-0416-84	**A5.00 | $50FF**	**U210**	960-5009-00
Voice 1	(8M)	965-0417-84	1.00 | $538D	U17	960-5016-00
Voice 2	(8M)	965-0418-84	1.00 | $8BCD	U21	960-5016-00
Voice 3	(8M)	965-0419-84	1.00 | $60F8	U36	960-5016-00
Voice 4	(8M)	965-0420-84	1.00 | $14D8	U37	960-5016-00
Display	(4M)	965-0421-84	**A5.00 | $A1F6**	**U5** DC PCB	960-5015-01

The Sopranos℠ (Notes 7, 8)

Sound	(512K)	965-0422-85	4.00 | $9B5A	U7	960-7001-02
Game ROM	(1M)	965-0423-85	**A5.00 | $5BFF**	**U210**	960-5009-00
Voice 1	(8M)	965-0424-85	3.00 | $F01E	U17	960-5016-00
Voice 2	(8M)	965-0425-85	1.04 | $C14C	U21	960-5016-00
Voice 3	(8M)	965-0426-85	1.04 | $47A3	U36	960-5016-00
Voice 4	(8M)	965-0427-85	1.04 | $ADCD	U37	960-5016-00
Display	(4M)	965-0428-85	**A5.00 | $B4BB**	**U5** DC PCB	960-5015-01

NASCAR® (Notes 7, 8)

Sound	(512K)	965-0429-86	2.00 | $32B3	U7	960-7001-02
Game ROM	(1M)	965-0430-86	**A4.50 | $39FF**	**U210**	960-5009-00
Voice 1	(8M)	965-0431-86	2.00 | $CFFB	U17	960-5016-00
Voice 2	(8M)	965-0432-86	2.00 | $22C0	U21	960-5016-00
Voice 3	(8M)	965-0433-86	2.00 | $5FC8	U36	960-5016-00
Voice 4	(8M)	965-0434-86	2.00 | $2902	U37	960-5016-00
Display	(4M)	965-0435-86	**A4.00 | $92BD**	**U5** DC PCB	960-5015-01

Grand Prix (Notes 7, 8)

Sound	(512K)	965-0429-91	V1.00 | $6F89	U7	960-7001-02
Game ROM	(1M)	965-0430-91	**A4.50 | $5EFF**	**U210**	960-5009-00
Voice 1	(8M)	965-0431-91	1.00 | $CE0E	U17	960-5016-00
Voice 2	(8M)	965-0432-91	1.00 | $F4C6	U21	960-5016-00
Voice 3	(8M)	965-0433-91	1.00 | $057D	U36	960-5016-00
Voice 4	(8M)	965-0434-91	1.00 | $2646	U37	960-5016-00
Display	(4M)	965-0435-91	**A4.00 | $DA8E**	**U5** DC PCB	960-5015-01

[NDSE] (Notes 7, 8) *Call for more info if code update required.*

Sound	(512K)	965-0436-97	U7	960-7001-02
Game ROM	(1M)	965-0437-97	**U210**	960-5009-00
Voice 1	(8M)	965-0438-97	U17	960-5016-00
Voice 2	(8M)	965-0439-97	U21	960-5016-00
Voice 3	(8M)	965-0440-97	U36	960-5016-00
Voice 4	(8M)	965-0441-97	U37	960-5016-00
Display	(4M)	965-0442-97	**U5** DC PCB	960-5015-01

**** GAMES BELOW THIS LINE / NEXT COLUMN ARE S.A.M. SYSTEM GAMES**

TO ORDER MEMORY STICK WITH GAME FILES FROM YOUR DISTRIBUTOR, USE SPI PART NUMBER 970-0128-00 & INCLUDE THE GAME NAME / LANGUAGE FILE(S) DESIRED.

World Poker Tour™ Pinball (WPT) (Notes 7, 9)

Boot B-02	(8M)	**965-BOOT-SAM**	**1.04** | $7E62	**U9**	*960-5016-00 unprogrammed*

Memory Stick 128MB (970-0128-00)	**Version**	**System**	**Bin Files:**
English + Spanish	1.12AL	1.17+	WPT0112AL.bin
English Only	1.12A	1.17+	WPT0112A.bin
English + French	1.12AF	1.17+	WPT0112AF.bin
French Only	1.12F	1.17+	WPT0112F.bin
German + French	1.12GF	1.17+	WPT0112GF.bin
German Only	1.12G	1.17+	WPT0112G.bin
English + Italian	1.12AI	1.17+	WPT0112AI.bin
Italian Only	1.12I	1.17+	WPT0112I.bin

NOTE: THE TYPICAL SIZE PER UNZIPPED BIN FILE IS 25MB – 30MB+/–

The Simpsons™ Kooky Carnival Redemption (Note 9)

Boot B-02	(8M)	**965-BOOT-SAM**	**1.04** | $7E62	**U9**	*960-5016-00 unprogrammed*

Memory Stick 128MB (970-0128-00)	**Version**	**Bin Files:**
English Only	1.05	SKC0105.bin
English New Jersey Only	0.09NJ	SKC0090NJ.bin

NOTE: THE TYPICAL SIZE PER UNZIPPED BIN FILE IS 5.5MB +/–

©Disney's Pirates of the Caribbean Pinball (POTC) (Notes 7, 9)

Boot B-02	(8M)	**965-BOOT-SAM**	**1.06** | $2014	**U9**	*960-5016-00 unprogrammed*

Memory Stick 128MB (970-0128-00)	**Version**	**System**	**Bin Files:**
English + Spanish	1.15AS	1.17+	POTC115AS.bin
English + French	1.15AF	1.17+	POTC115AF.bin
German + French	1.15GF	1.17+	POTC115GF.bin
English + Italian	1.15AI	1.17+	POTC115AI.bin

NOTE: THE TYPICAL SIZE PER UNZIPPED BIN FILE IS 25MB – 30MB+/–

Family Guy™ Pinball (FG) (Notes 7, 9)

Boot B-02	(8M)	**965-BOOT-SAM**	**2.09** | $10A3	**U9**	*960-5016-00 unprogrammed*

Memory Stick 128MB (970-0128-00)	**Version**	**System**	**Bin Files:**
English + Spanish	10.00AL	1.23+	FG1000AL.bin
English + French	10.00AF	1.23+	FG1000AF.bin
English + German	10.00AG	1.23+	FG1000GF.bin
English + Italian	10.00AI	1.23+	FG1000AI.bin

NOTE: THE TYPICAL SIZE PER UNZIPPED BIN FILE IS 25MB – 30MB+/–

Spider-Man™ Pinball (S-M) (Notes 7, 9)

Boot B-02	(8M)	**965-BOOT-SAM**	**2.10** | $F625	**U9**	*960-5016-00 unprogrammed*

Memory Stick 128MB (970-0128-00)	**Version**	**System**	**Bin Files:**
English + Spanish	1.3ES	1.27+	spd_1_30_es.bin
English + French	1.3EF	1.27+	spd_1_30_ef.bin
German+French	1.3GF	1.27+	spd_1_30_gf.bin
English + Italian	1.3EI	1.27+	spd_1_30_ei.bin

NOTE: THE TYPICAL SIZE PER UNZIPPED BIN FILE IS 25MB – 30MB+/–

footnotes:

1 ROMs on CPU/Sound Bd.: 520-5136-**00** (Stereo) & Display Cont. Bd.: 520-5055-01
2 ROMs on CPU/Sound Bd.: 520-5136-**10** (Mono) & Display Cont. Bd.: 520-5055-01
3 ROMs on CPU/Sound Board: 520-5136-**15*** (Mono) (*FCC 11-97) &
Display Controller Board: 520-5055-**02*** (*FCC 11-97)

APPENDIX A

Pinball Game Firmware Table

EPROM	Chip Size	Program Part Nº	USA Ver.	Bd. Loc.	Raw Part Nº
Laser War					
CPU	(256K)	965-0004-00	LWAR.C5	C5	960-5007-00
Sound (Old)	(256K)	965-0005-00		J5	960-5007-00
Sound (Old)	(256K)	965-0006-00		J6	960-5007-00
Sound (Old)	(256K)	965-0007-00		J7	960-5007-00
			- OR -		
Sound	(256K)	965-0008-00		7F	960-5007-00
Sound 1	(512K)	965-0009-00		6F	960-7001-02
Sound 2	(512K)	965-0010-00		4F	960-7001-02
Secret Service					
CPU	(256K)	965-0011-00	A4-6	B5	960-5007-00
CPU	(256K)	965-0012-00	A4-6	C5	960-5007-00
Voice 1	(512K)	965-0014-00		6F	960-7001-02
Voice 2	(512K)	965-0015-00		4F	960-7001-02
Sound	(256K)	965-0013-00		7F	960-5007-00
Torpedo Alley					
CPU	(256K)	965-0016-00	A2-1	B5	960-5007-00
CPU	(256K)	965-0017-00	A2-1	C5	960-5007-00
Voice 1	(512K)	965-0019-00		6F	960-7001-02
Voice 2	(512K)	965-0020-00		4F	960-7001-02
Sound	(256K)	965-0018-00		7F	960-5007-00
Time Machine					
CPU	(128K)	965-0021-00	A2-4	B5	960-5006-00
CPU	(256K)	965-0022-00	A2-4	C5	960-5007-00
Voice 1	(512K)	965-0024-00		6F	960-7001-02
Voice 2	(512K)	965-0025-00		4F	960-7001-02
Sound	(256K)	965-0023-00		7F	960-5007-00
Playboy 35th Anniversary					
CPU	(256K)	965-0046-00	A2-4	B5	960-5007-00
CPU	(256K)	965-0047-00	A2-4	C5	960-5007-00
Voice 1	(512K)	965-0049-00		6F	960-7001-02
Voice 2	(512K)	965-0050-00		4F	960-7001-02
Sound	(256K)	965-0048-00		7F	960-5007-00
ABC Monday Night Football					
CPU	(128K)	965-0031-00	A2-7	B5	960-5006-00
CPU	(256K)	965-0032-00	A2-7	C5	960-5007-00
Voice 1	(512K)	965-0034-00		6F	960-7001-02
Voice 2	(512K)	965-0035-00		4F	960-7001-02
Sound	(256K)	965-0033-00		7F	960-5007-00
Robocop					
CPU	(256K)	965-0036-00	A3-4	B5	960-5007-00
CPU	(256K)	965-0037-00	A3-4	C5	960-5007-00
Voice 1	(512K)	965-0039-00		6F	960-7001-02
Voice 2	(512K)	965-0040-00		4F	960-7001-02
Sound	(256K)	965-0038-00		7F	960-5007-00
Phantom of the Opera					
CPU	(128K)	965-0026-00	A3-2	B5	960-5006-00
CPU	(256K)	965-0027-00	A3-2	C5	960-5007-00
Voice 1	(512K)	965-0029-00		6F	960-7001-02
Voice 2	(512K)	965-0030-00		4F	960-7001-02
Sound	(256K)	965-0028-00		7F	960-5007-00
Back to the Future					
CPU	(256K)	965-0041-00	A2-0	B5	960-5007-00
CPU	(256K)	965-0042-00	A2-0	C5	960-5007-00
Voice 1	(512K)	965-0044-00		6F	960-7001-02
Voice 2	(512K)	965-0045-00		4F	960-7001-02
Sound	(256K)	965-0043-00		7F	960-5007-00
The Simpsons					
CPU	(128K)	965-0051-00	A2-7	B5	960-5006-00
CPU	(256K)	965-0052-00	A2-7	C5	960-5007-00
Voice 1	(512K)	965-0054-00		6F	960-7001-02
Voice 2	(512K)	965-0055-00		4F	960-7001-02
Sound	(256K)	965-0053-00		7F	960-5007-00
Checkpoint					
CPU	(128K)	965-0056-00	A1-7	B5	960-5006-00
CPU	(256K)	965-0134-00	A1-7	C5	960-5007-00
Voice 1	(1M)	965-0057-00		F7	960-5009-00
Voice 2	(1M)	965-0058-00		F5	960-5009-00
Sound	(256K)	965-0059-00		F4	960-5007-00
Display	(512K)	965-0060-00	CP80	U8	960-7001-02
Teenage Mutant Ninja Turtles					
CPU	(128K)	965-0061-00	A1.04	B5	960-5006-00
CPU	(256K)	965-0062-00	A1.04	C5	960-5007-00
Voice 1	(1M)	965-0063-00		F5/6	960-5009-00
Voice 2	(1M)	965-0064-00		F4/5	960-5009-00
Sound	(256K)	965-0065-00		F7	960-5007-00
Display	(512K)	965-0066-00	A1.04	U8	960-7001-02
Batman					
CPU	(128K)	965-0067-00	A1.06	B5	960-5006-00
CPU	(256K)	965-0135-00	A1.06	C5	960-5007-00
Voice 1	(2M)	965-0068-00		U17	960-5010-00
Voice 2	(1M)	965-0069-00		U21	960-5009-00
Sound	(256K)	965-0070-00		U7	960-5007-00
Display	(1M)	965-0071-00	A1.06	U8	960-5009-00
Star Trek 25th Anniversary					
CPU	(512K)	965-0072-00	A2.01	C5	960-7001-02
Voice 1	(2M)	965-0073-00		U17	960-5010-00
Voice 2	(2M)	965-0074-00		U21	960-5010-00
Sound	(256K)	965-0075-00		U7	960-5007-00
Display	(1M)	965-0076-00	A1.09	U8	960-5009-00
Hook					
CPU	(512K)	965-0077-00	A4.08	C5	960-7001-02
Voice 1	(2M)	965-0078-00		U17	960-5010-00
Voice 2	(2M)	965-0079-00		U21	960-5010-00
Sound	(256K)	965-0080-00		U7	960-5007-00
Display	(1M)	965-0081-00	A4.01	U8	960-5009-00
Lethal Weapon 3					
CPU	(512K)	965-0082-00	A2.08	C5	960-7001-02
Voice 1	(2M)	965-0083-00		U17	960-5010-00
Voice 2	(2M)	965-0084-00		U21	960-5010-00
Sound	(256K)	965-0085-00		U7	960-5007-00
Display	(2M)	965-0086-00	A2.06	ROM 0	960-5010-00
Display	(2M)	965-0087-00	A2.06	ROM 1	960-5010-00
	(Used on Display PCB 520-5055-00)				
			-OR-		
Display	(4M)	965-0087-04	A2.06	ROM 0	960-5015-00
	(Used on Display PCB 520-5055-01)				
Star Wars					
CPU	(512K)	965-0119-00	A1.03	C5	960-7001-02
Voice 0	(4M)	965-0132-00		U17	960-5015-00
Voice 1	(2M)	965-0133-00		U21	960-5010-00
Sound	(256K)	965-0131-00		U7	960-5007-00
Display	(2M)	965-0120-00	A1.04	ROM 0	960-5010-00
Display	(2M)	965-0121-00	A1.04	ROM 1	960-5010-00
	(Used on Display PCB 520-5055-00)				
			-OR-		
Display	(4M)	965-0122-00	A1.05	ROM 0	960-5015-00
	(Used on Display PCB 520-5055-01)				
Rocky & Bullwinkle & Friends					
CPU	(512K)	965-0138-00	A1.30	C5	960-7001-02
Voice 0	(4M)	965-0139-00		U17	960-5015-00
Voice 1	(2M)	965-0140-00		U21	960-5010-00
Sound	(256K)	965-0141-00		U7	960-5007-00
Display	(4M)	965-0142-00	A1.30	ROM 0	960-5015-00
Jurassic Park					
CPU	(512K)	965-0143-00	A5.13	C5	960-7001-02
Voice 0	(4M)	965-0144-00		U17	960-5015-00
Voice 1	(2M)	965-0145-00		U21	960-5010-00
Sound	(256K)	965-0146-00		U7	960-5007-00
Display	(4M)	965-0147-00	A5.10	ROM 0	960-5015-00
Last Action Hero					
CPU	(512K)	965-0148-00	A1.12	C5	960-7001-02
Voice 0	(4M)	965-0149-00		U17	960-5015-00
Voice 1	(2M)	965-0150-00		U21	960-5010-00
Sound	(256K)	965-0151-00		U7	960-5007-00
Display	(4M)	965-0152-00	A1.06	ROM 0	960-5015-00
Tales from the Crypt					
CPU	(512K)	965-0157-00	A3.03	C5	960-7001-02
Voice 0	(4M)	965-0158-00		U17	960-5015-00
Voice 1	(2M)	965-0159-00		U21	960-5010-00
Sound	(256K)	965-0160-00		U7	960-5007-00
Display	(4M)	965-0161-00	A3.01	ROM 0	960-5015-00
The Who's Tommy					
CPU	(512K)	965-0162-00	A4.00	C5	960-7001-02
Voice 1	(4M)	965-0165-00		U17	960-5015-00
Voice 2	(4M)	965-0166-00		U21	960-5015-00
Voice 3	(4M)	965-0167-00		U36	960-5015-00
Voice 4	(4M)	965-0168-00		U37	960-5015-00
Sound	(512K)	965-0164-00		U7	960-7001-02
Display	(4M)	965-0163-00	A4.00	ROM 0	960-5015-00
WWF Royal Rumble					
CPU	(512K)	965-0169-00	A1.06	C5	960-7001-02
Voice 1	(4M)	965-0172-00		U17	960-5015-00
Voice 2	(4M)	965-0173-00		U21	960-5015-00
Voice 3	(4M)	965-0174-00		U36	960-5015-00
Sound	(512K)	965-0171-00		U7	960-7001-02
Display	(4M)	965-0170-00	A1.02	ROM 0	960-5015-00
Guns N' Roses					
CPU	(512K)	965-0175-00	A3.00	C5	960-7001-02
Voice 1	(4M)	965-0178-00		U17	960-5015-00
Voice 2	(4M)	965-0179-00		U21	960-5015-00
Voice 3	(4M)	965-0180-00		U36	960-5015-00
Voice 4	(4M)	965-0181-00		U37	960-5015-00
Sound	(512K)	965-0177-00		U7	960-7001-02
Display	(4M)	965-0176-00	A3.00	ROM 0	960-5015-00
Maverick *					
CPU	(512K)	965-0182-00	A4.04	C5	960-7001-02
Voice 1	(4M)	965-0186-00		U17	960-5015-00
Voice 2	(4M)	965-0187-00		U21	960-5015-00
Voice 3	(4M)	965-0187-01		U36	960-5015-00
Sound	(512K)	965-0185-00		U7	960-7001-02
Display*	(4M)	965-0183-00	A4.01	ROM 0	960-5015-00
Display*	(4M)	965-0184-00	A4.01	ROM 3	960-5015-00
Mary Shelley's Frankenstein *					
CPU	(512K)	965-0188-00	A1.03	C5	960-7001-02
Voice 1	(4M)	965-0192-00		U17	960-5015-00
Voice 2	(4M)	965-0193-00		U21	960-5015-00
Voice 3	(4M)	965-0194-00		U36	960-5015-00
Sound	(512K)	965-0191-00		U7	960-7001-02
Display*	(4M)	965-0189-00	A1.03	ROM 0	960-5015-00
Display*	(4M)	965-0190-00	A1.03	ROM 3	960-5015-00
Baywatch *		(CPU Board 520-5003-04)			
CPU	(512K)	965-0195-00	A4.00	C5	960-7001-02
Voice 1	(4M)	965-0196-00		U17	960-5015-00
Voice 2	(4M)	965-0197-00		U21	960-5015-00
Sound	(512K)	965-0199-00		U7	960-7001-02
Display*	(4M)	965-0200-00	A4.00	ROM 0	960-5015-00
Display*	(4M)	965-0201-00	A4.00	ROM 3	960-5015-00
Batman Forever *		(CPU Board 520-5003-04)			
CPU	(512K)	965-0202-00	A3.02	C5	960-7001-02
Voice 1	(4M)	965-0203-00		U17	960-5015-00
Voice 2	(4M)	965-0204-00		U21	960-5015-00
Sound	(512K)	965-0205-00		U7	960-7001-02
Display*	(4M)	965-0206-00	A3.00	ROM 0	960-5015-00
Display*	(4M)	965-0207-00	A3.00	ROM 3	960-5015-00

* ***Note:*** *Display* ***EPROMS (4M)*** *for* ***Maverick*** *thru* ***Batman Forever*** *require an access time of* ***120 Nsec*** *or faster.*

APPENDIX B

Semi-Conductors / Integrated Circuits (I.C.) / Relays Cross-Reference Table

Table №	Type	Source Number	STERN® PINBALL	N T E®	E C G®	Radio Shack®	R C A®
	RECTIFICATION, BLOCKING, DAMPENING DIODES AND/OR LIGHT EMITTING DIODES (LEDs)						
1	Diode	1N4001	112-5001-00	NTE552	ECG552	- — - — -	SK9000
	Diode	1N4004	112-5003-00	NTE116	ECG116	276-1103	SK3312
	Diode	1N5401	112-0056-00	NTE5801	ECG5801	276-1143	SK9004
	Diode	1N5404	112-5004-00	NTE5804	ECG5804	276-1144	SK9007
	Diode	T6A10L	112-5006-01	NTE5812	ECG5812	- — - — -	- — - — -
	Diode	FR302	112-5009-00	NTE588	ECG588	- — - — -	SK5014
	Diode, Signal	1N914	112-5014-00	- — - — -	- — - — -	- — - — -	- — - — -
	LED	**MT5000UR** or **TLRH180P** (T1-3/4 GaAlAs)	165-5052-00 *(old SPI Part №: 165-5100-00)*	- — - — -	- — - — -	276-066B	- — - — -
	ZENER DIODES						
2	Diode	1N4742A 12v	112-0061-00	NTE142A	ECG142A	276-563	SK12V
	Diode	1N4760B 68v	112-0062-00B	NTE5092A	ECG5092A	- — - — -	SK68V
	Diode	1N4764A 100v	112-0049-00A	NTE5096A	ECG5096A	- — - — -	SK100V
	Diode	1N5228 3.9v	112-0053-00	NTE5007A	ECG5007A	- — - — -	SK3A9
	Diode	1N5234B 6.2v	112-0047-00B	NTE5013A	ECG5013A	276-561	SK6A2
	Diode	1N5379 110v	112-0072-00	NTE5157	ECG5157	- — - — -	SK110X
	Diode	1N6267A 6.8v	112-5011-00	NTE4902	ECG4902	- — - — -	- — - — -
	Diode	1N4752A 33v	112-5010-00A	NTE147A	ECG147A	- — - — -	SK33V
	Diode	1N4736 6.8v 1w	112-5007-00	NTE5071A	ECG5071A	- — - — -	- — - — -
	TRANSISTORS - TYPE FET, NPN, PNP AND/OR SCR						
3	FET Trans.	STP20N10L	110-0106-00	NTE2987	ECG2987	- — - — -	- — - — -
	FET Trans.	STP19N06L	110-0088-00	NTE2985	ECG2985	- — - — -	- — - — -
	FET Trans.	VN02N	110-0089-00	- — - — -	- — - — -	- — - — -	- — - — -
	NPN Trans.	2N4401	110-0073-00	NTE85	ECG85	276-2009	SK3124A
	NPN Trans.	2N6427	110-0070-00	NTE48	ECG48	- — - — -	SK4906
	NPN Trans.	MJE340	110-0071-00	NTE157	ECG157	- — - — -	SK3747
	NPN Trans.	MPSA42	110-0082-00	NTE287	ECG287	- — - — -	SK3232
	NPN Trans.	2N3904	110-0069-00	NTE123AP	ECG123AP	276-2009	- — - — -
	NPN Trans.	TIP122	110-0067-00	NTE261	ECG261	276-2068	SK3896
	NPN Trans.	MJE15030	110-0101-00	NTE375	ECG375	- — - — -	SK9118
	PNP Trans.	2N5401	110-0078-00	NTE288	ECG288	- — - — -	SK3434
	PNP Trans.	MJE15031	110-0103-00	NTE292	ECG292	- — - — -	SK3441
	PNP Trans.	MJE350	110-0072-00	NTE374	ECG374	- — - — -	SK9042
	PNP Trans.	MPSA92	110-0100-00	NTE288	ECG278	- — - — -	SK3434
	PNP Trans.	TIP42	110-0068-00	NTE332	ECG332	- — - — -	SK9236
	PNP Trans.	TIP32C	110-0081-00	NTE292	ECG292	- — - — -	SK3441
	PNP Trans.	TIP36C	110-0077-00	NTE393	ECG393	- — - — -	SK3961
	SCR Trans.	2N5060	110-0074-00	NTE5400	ECG5400	276-1067	SK3950
	SCR Trans.	SCR2800B	110-0083-00	NTE5461-8	ECG5461-8	- — - — -	- — - — -
	BRIDGE RECTIFIERS (BR)			**Comments:**			
4	BR (Present)	DB3501 or CM3501	112-5000-00	For White Star I/O Bds., BR = 35 Amp @ 100v P.I.V.			
	RELAYS			**Comments:**			
5	Relay	FRL-264 D024/02CK	190-5002-00	For PPB, Power Supply, & White Star I/O Boards, Relay = 24v DC 10 Amp DPDT			
	Relay	FRL-264 D006/04CV	190-5001-00	For CPU Boards, Relay = 6v DC 5 Amp 4 Pole DT			

APPENDIX C

Production Start Date, Manual Part Nº, ROM Size & Positions and Jumper W6 Installed Note‡ (White Star Board System & S.A.M. System Only*)

	Game Name White Star Bd. System™	Production Start Date and Manual Part Nr.	CPU/Sound Board **Sound U7 512K** CPU/Sound Board **Game U210 1MB** CPU/Sound Board **Voice ROMS:**				Jumper Installed (‡ see Note)
			U17	U21	U36	U37	
29	Apollo 13 (A13)	NOV 95 780-5044-00	4MB	4MB	4MB	Not Used	n / a
30	Golden Eye	FEB 96 780-5042-00	4MB	4MB	Not Used	Not Used	n / a
31	Twister	APR 96 780-5041-00	4MB	4MB	Not Used	Not Used	n / a
32	ID4: Independence Day	JUL 96 780-5045-00	4MB	4MB	Not Used	Not Used	n / a
33	Space Jam	OCT 96 780-5043-00	4MB	4MB	4MB	Not Used	n / a
34	The Star Wars Trilogy - Sp. Ed.	FEB 97 780-5056-00	4MB	4MB	Not Used	Not Used	n / a
35	The Lost World: Jurassic Park	JUN 97 780-5053-00	4MB	4MB	Not Used	Not Used	n / a
36	The X-Files	AUG 97 780-5046-00	4MB	4MB	Not Used	Not Used	n / a
37	Starship Troopers	NOV 97 780-5059-00	4MB	4MB	4MB	Not Used	n / a
38	Viper Night Drivin'	FEB 98 780-5035-00	4MB	4MB	4MB	4MB	n / a
39	Lost In Space	JUN 98 780-5060-00	4MB	4MB	4MB	4MB	n / a
40	Godzilla	SEP 98 780-5040-00	4MB	4MB	4MB	4MB	n / a
41	South Park	JAN 99 780-5071-00	8MB	8MB	8MB	8MB	W6
42 a	Harley-Davidson®	AUG 99 780-5067-01	8MB	8MB	8MB	8MB	W6
42 b	Harley-Davidson®2nd Ed.	SEP 02 780-5067-10	8MB	8MB	8MB	8MB	W6
42 c	Harley-Davidson® 3rd Ed.	OCT 04 780-5087-00	8MB	8MB	8MB	8MB	W6
43 a	Striker Xtreme	MAR 00 780-5068-01	8MB	8MB	8MB	8MB	W6
43 b	NFL	OCT 00 780-50**73**-00	8MB	8MB	8MB	8MB	W6
44	Sharkey's Shootout	JUL/OCT 00 780-5072-01	8MB	8MB	8MB	Not Used	W6
45	High Roller Casino	JAN 01 780-5065-00	8MB	8MB	8MB	8MB	W6
46	Austin Powers™	MAY 01 780-5074-00	8MB	8MB	8MB	8MB	W6
47	MONOPOLY®	SEP 01 780-5075-00	8MB	8MB	8MB	Not Used	W6
48	Playboy	FEB 02 780-5076-00	8MB	8MB	8MB	8MB	W6
49	RollerCoaster Tycoon™	AUG 02 780-5078-00	8MB	8MB	8MB	Not Used	W6
50	The Simpsons™ Pinball Party	JAN 03 780-5077-00	8MB	8MB	8MB	8MB	W6
51	T3®: Rise of the Machines™	MAY 03 780-5079-00	8MB	8MB	8MB	8MB	W6
52	The Lord of the Rings™	NOV 03 780-5080-00	8MB	8MB	8MB	8MB	
53	Ripley's Believe It or Not!®	APR 04 780-5081-00	8MB	8MB	8MB	8MB	

**** Note:*** *For complete Appendix Information for Games **Laser War** through **Batman Forever**, see any Service Game Manual between **Apollo 13** through **Ripley's Believe It or Not!** or on-line at our website www.sternpinball.com/parts.htm; also available on CD-R, 970-2003-00 (**The Simpsons™ Pinball Party**, **T3®** and **The Lord of the Rings™**).*

‡ *Additional Information for **Installed** Jumper (above games 41-51):*

• *Installed **W6** so 8MB ROMS can be utilized. See the **CPU/Sound Board Schematic** (Sheet 2 of 3, Address Location 3E) in the games' Service Game Manual. Games 52 - 57 CPU/Sound Board differ than <51 (See Appendix D).*

See **Apdx. A** for more detailed information on **Pinball Game Firmware** *(ROM Name, Size, Part Numbers, USA Version & Checksum and Board Locations).*

	Game Name White Star Board System™	Production Start Date and Manual Part Nr.	CPU/Sound Board **Sound U7 512K** CPU/Sound Board **Game U210 1MB** CPU/Sound Board **Voice ROMS:**			
			U17	U21	U36	U37
54	Elvis®	AUG 04 780-5084-00	8MB	8MB	8MB	8MB
55	The Sopranos℠	FEB 05 780-5085-00	8MB	8MB	8MB	8MB
56	NASCAR®	JUL 05 780-5086-00	8MB	8MB	8MB	8MB
57	Grand Prix	SEP 05 780-5091-00	8MB	8MB	8MB	8MB

See **Apdx. A** for more detailed information on **Pinball Game Firmware** *(ROM Name, Size, Part Numbers, USA Version & Checksum and Board Locations).*

	Game Name S.A.M. System	Production Start Date and Manual Part Nr.	S.A.M. System CPU/Sound Board Boot EPROM **U9** 965-BOOT-SAM *(Programmed)*			
58	World Poker Tour™ (WPT)	JUN 06 780-5088-00	8MB	B-02 V2.1+	chksum $F625	LOC: U9
59	The Simpsons™ Kooky Carnival	APR 06 780-5090-00	8MB	B-02 V2.1+	chksum $F625	LOC: U9
60	©Disney's Pirates of the Caribbean	AUG 06 780-5092-00	8MB	B-02 V2.1+	chksum $F625	LOC: U9
61	Famil Guy™	DEC 06 780-5093-00	8MB	B-02 V2.1+	chksum $F625	LOC: U9
62	Spider-Man™	MAY 07 780-5094-00	8MB	B-02 V2.1+	chksum $F625	LOC: U9

Games 58 – current, S.A.M. System : CPU/Sound & I/O Power Driver PCBs differ than White Star *(previous Games 29 – 57)*; Disp. Controller Not Required.

APPENDIX D

Board Type (White Star Board System* Only) Table

Game Name	Flipper	I/O Power Driver	CPU/Sound Stereo	Disp. Power Supply	Dot Matrix Display	Display Controller	OPTO Transmitter	OPTO Receiver	OPTO Application
Apollo 13	520-5080-00 2-Flipper	520-5137-00	520-5136-00	520-5138-00	520-5052-00 128 X 32 Dots	520-5055-01	520-5124-00 Single OPTO	520-5125-00 Single OPTO	5-Ball Trough over Up-Kicker
	Miscellaneous PC Boards:	Light Boards 520-5130-01, -04 & -05 Magnet Interface, 7-Segment Display & Light Bd. 520-5130-06 Magnet Driver Board 520-5130-02 Switch Membrane Board 520-5130-03				Relay Board 520-5010-00			
Golden Eye	520-5080-00 2-Flipper	520-5137-00	520-5136-00	520-5138-00	520-5052-00 128 X 32 Dots	520-5055-01	520-5124-00 Single OPTO	520-5125-00 Single OPTO	5-Ball Trough over Up-Kicker
	Miscellaneous PC Boards:	Light Boards 520-5128-05 through -08		Mag. Processor X2 Driver Bd. 520-5143-00		Relay Board 520-5010-00			

GAMES HEREON NO LONGER REQUIRE THE FLIPPER BOARD WITH THE WHITE STAR BOARD SYSTEM™

Game Name	I/O Power Driver	CPU/Sound Mono	Disp. Power Supply	Dot Matrix Display	Display Controller	OPTO Transmitter	OPTO Receiver	OPTO Application	Misc OPTO & App.
Twister	520-5137-01	520-5136-10	520-5138-00	520-5052-00 128 X 32 Dots	520-5055-01	520-5124-00 Single OPTO	520-5125-00 Single OPTO	5-Ball Trough over Up-Kicker	
	Miscellaneous PC Boards:	Light Boards 520-5145-01 through -07		Mag. Drv. Bd. 520-5143-00	Relay Board 520-5010-00				
Independence Day (ID4)	520-5137-01	520-5136-10	520-5138-00	520-5052-00 128 X 32 Dots	520-5055-01	520-5124-00 Single OPTO	520-5125-00 Single OPTO	4-Ball Trough over Up-Kicker	
	Miscellaneous PC Boards:	Light Boards 520-5149-01 through -10		Servo Mtr. Bd. 520-5152-00		520-5082-00 Long Hop OPTO	520-5083-00 Long Hop OPTO	Alien Head Enter	
Space Jam	520-5137-01	520-5136-10	520-5138-00	520-5052-00 128 X 32 Dots	520-5055-01	520-5124-00 Single OPTO	520-5125-00 Single OPTO	5-Ball Trough over Up-Kicker	
	Miscellaneous PC Boards:	2X 7-Segment Display Board 520-5153-00							
The Star Wars Trilolgy - Special Ed.	520-5137-01	520-5136-10	520-5138-00	520-5052-00 128 X 32 Dots	520-5055-01	520-5124-00 Single OPTO	520-5125-00 Single OPTO	4-Ball Trough over Up-Kicker	
	Miscellaneous PC Boards:	Relay Board 520-5010-00							
The Lost World: J.P.	520-5137-01	520-5136-10	520-5138-00	520-5052-00 128 X 32 Dots	520-5055-01	520-5124-00 Single OPTO	520-5125-00 Single OPTO	4-Ball Trough over Up-Kicker	520-5162-00 2-Pos. Motor Sensor on Snagger Motor
	MiscellaneousPC Boards:	DC Relay Bd. 520-5066-00	Shaker Mtr. Bd. 520-5065-00						
The X-Files	520-5137-01	520-5136-10	520-5138-00	520-5052-00 128 X 32 Dots	520-5055-01	520-5124-00 Single OPTO	520-5125-00 Single OPTO	4-Ball Trough over Up-Kicker	520-5155-00 3-Pos. Motor Sensor on File Cab. Motor
	Miscellaneous PC Boards:					520-5082-00 Long Hop OPTO	520-5083-00 Long Hop OPTO	File Cabinet Enter	
Starship Troopers	520-5137-01	520-5136-15	520-5138-00	520-5052-00 128 X 32 Dots	520-5055-02	520-5124-00 Single OPTO	520-5125-00 Single OPTO	4-Ball Trough over Up-Kicker	
	Miscellaneous PC Boards:	4X 7-Segment Display Board 520-5166-00				520-5082-00 Long Hop OPTO	520-5083-01 Long Hop OPTO	L/R Orbit Lane Enter	
Viper Night Drivin'	520-5137-01	520-5136-16	520-5138-00	520-5052-00 128 X 32 Dots	520-5055-03	520-5124-00 Single OPTO	520-5125-00 Single OPTO	4-Ball Trough over Up-Kicker	
	Miscellaneous PC Boards:	Relay Board 520-5010-00				520-5082-00 Long Hop OPTO	520-5083-01 Long Hop OPTO	Jump Ramp	
Lost In Space	520-5137-01	520-5136-16	520-5138-00	520-5052-00 128 X 32 Dots	520-5055-03	515-0173-00 Dual OPTO	515-0174-00 Dual OPTO	4-Ball Trough over Up-Kicker	
	Miscellaneous PC Boards:	Relay Board 520-5010-00							
Godzilla	520-5137-01	520-5136-16	520-5138-00	520-5052-00 128 X 32 Dots	520-5055-03	515-0173-00 Dual OPTO	515-0174-00 Dual OPTO	4-Ball Trough over Up-Kicker	
	Miscellaneous PC Boards:	Shaker Mtr. Bd. 520-5065-00							
South Park	520-5137-01	520-5136-16	520-5138-00	520-5052-00 128 X 32 Dots	520-5055-03	515-0173-00 Dual OPTO	515-0174-00 Dual OPTO	5-Ball Trough over Up-Kicker	
	Miscellaneous PC Boards:					520-5082-00 Long Hop OPTO	520-5083-01 Long Hop OPTO	Kenny Under Trough Enter	
Harley-Davidson® 1st-3rd* Editions	520-5137-01	520-5136-16 *520-5300-00*	520-5138-00	520-5052-00 128 X 32 Dots	520-5055-03	515-0173-00 Dual OPTO	515-0174-00 Dual OPTO	4-Ball Trough over Up-Kicker	
	Miscellaneous PC Boards:	Relay Board 520-5010-00	Shaker Mtr. Bd. 520-5065-00	Diode Board 520-5146-00		520-5082-00 Long Hop OPTO	520-5083-01 Long Hop OPTO	Motorcycle Enter	
Striker Xtreme (NFL)	520-5137-01	520-5136-16	520-5138-00	520-5052-00 128 X 32 Dots	520-5055-03	515-0173-00 Dual OPTO	515-0174-00 Dual OPTO	4-Ball Trough over Up-Kicker	520-5155-00 3-Pos. Motor Sensor on Goalie Motor
	Miscellaneous PC Boards:	DC Relay Bd. 520-5066-00	Relay Board 520-5010-00	Diode Board 520-5146-00	for UK ONLY> Solenoid Expander Bd. 520-5192-00	520-5082-00 Long Hop OPTO	520-5083-01 Long Hop OPTO	Goalie Under-Trough Enter	
Sharkey's Shootout	520-5137-64	520-5136-64	520-5138-00	520-5052-00 128 X 32 Dots	520-5055-03	515-0173-00 Dual OPTO	515-0174-00 Dual OPTO	4-Ball Trough over Up-Kicker	520-5194-00 4-Pos. Motor Sensor on ?-Ball Motor
	MiscellaneousPC Boards:	Relay Board 520-5010-00	Sol. Exp. Bd. 520-5192-00						
High Roller Casino	520-5137-01	520-5136-16	520-5138-00	520-5052-00 128 X 32 Dots	520-5055-03	515-0173-00 Dual OPTO	515-0174-00 Dual OPTO	4-Ball Trough over Up-Kicker	520-5194-00 4-Pos. Motor Sensor on Roulette Wheel Motor
						520-5082-00 Long Hop OPTO	520-5083-01 Long Hop OPTO	Ball Lock under Roulette	
	Miscellaneous PC Boards:	Dot Display (5X7) in Slot Mach. 520-5197-00			for UK ONLY> Solenoid Expander Bd. 520-5192-00	520-5196-00 3-Pos. OPTO	520-5195-00 3-Pos. OPTO	Up/Dn Ramp in Slot Mach.	
Austin Powers™	520-5137-01	520-5136-16	520-5138-00	520-5052-00 128 X 32 Dots	520-5055-03	515-0173-00 Dual OPTO	515-0174-00 Dual OPTO	4-Ball Trough over Up-Kicker	520-5212-00 Pulse-Stretcher OPTO on Spini-Me
	MiscellaneousPC Boards:	Relay Bd. (X3) 520-5010-00			for UK ONLY> Solenoid Expander Bd. 520-5192-00	520-5082-00 Long Hop OPTO	520-5083-01 Long Hop OPTO	Time Machine Ramp	
MONOPOLY®	520-5137-01	520-5136-16	520-5138-00	520-5052-00 128 X 32 Dots	520-5055-03	515-0173-00 Dual OPTO	515-0174-00 Dual OPTO	4-Ball Trough over Up-Kicker	
	MiscellaneousPC Boards:	DC Relay Bd. 520-5066-00	Mini-Dot Display (3 by 5X7) 520-5197-00 (Electric C° Sign)		for UK ONLY> Solenoid Expander Bd. 520-5192-00	520-5218-00 4-Pos. OPTO	520-5210-00 4-Pos. OPTO	Bank Door	

Table continued on the next page.

APPENDIX D

Board Type (White Star Board System* & S.A.M. System** Only) Table

Game Name	I/O Power Driver	CPU/Sound (old & new)	Disp. Power Supply	Dot Matrix Display	Display Controller	OPTO Transmitter	OPTO Receiver	OPTO Application	Misc OPTO & App.
Playboy	520-5137-01	520-5136-16	520-5138-00	520-5052-00 128 X 32 Dots	520-5055-03	515-0173-00 Dual OPTO	515-0174-00 Dual OPTO	4-Ball Trough over Up-Kicker	
	Miscellaneous PC Boards:	DC Relay Bd. 520-5066-00	Relay Bd. 520-5010-00		for UK ONLY> Solenoid Expander Bd. 520-5192-00				
RollerCoaster Tycoon™	520-5137-01	520-5136-16	520-5138-00	520-5052-00 128 X 32 Dots	520-5055-03	515-0173-00 Dual OPTO	515-0174-00 Dual OPTO	4-Ball Trough over Up-Kicker	520-5222-00 1-Position Switch Detect on Wheel Spin
	Miscellaneous PC Boards:	DC Relay Bd. 520-5066-00	Mini-Dot Display (3 by 5X7) 520-5221-00 (Ramp Enter Sign)		for UK ONLY> Solenoid Expander Bd. 520-5192-00	520-5082-00 Long Hop OPTO	520-5083-01 Long Hop OPTO	Behind 1-Bank Drop Target	
The Simpsons™ Pinball Party	520-5137-01	520-5136-16	520-5138-00	520-5052-00 128 X 32 Dots	520-5055-03	515-0173-00 Dual OPTO	515-0174-00 Dual OPTO	4-Ball Trough over Up-Kicker	
	Miscellaneous PC Boards:	LED Bd. 520-5219-00	Color Dot Display (4 by 5X7) 520-5225-00 (TV Set)		for UK ONLY ◀◀◀ Aux. Driver Bd. 520-5068-01				
Terminator® 3: Rise of the Machines™	520-5137-01	**520-5136-16**	520-5138-00	520-5052-00 128 X 32 Dots	520-5055-03	515-0173-00 Dual OPTO	515-0174-00 Dual OPTO	4-Ball Trough over Up-Kicker	
	Miscellaneous PC Boards:				for UK ONLY ◀◀◀ Aux. Driver Bd. 520-5068-01	515-7307-00 Single OPTO	515-7308-00 Single OPTO	TXCannon Trough	
The Lord of the Rings™	520-5137-01	***New* 520-5300-00**	520-5138-00	520-5052-00 128 X 32 Dots	520-5055-03	515-0173-00 Dual OPTO	515-0174-00 Dual OPTO	4-Ball Trough over Up-Kicker	500-6746-00 (White Trans.) 500-6747-00 (Black Rec.)
	Miscellaneous PC Boards:	19-LED PCB 520-5242-00	OPTO Transmitter / Receiver Amplifier PCB 520-5239-00		for UK ONLY ◀◀◀ Aux. Driver Bd. 520-5068-01	515-7307-00 Single OPTO	515-7308-00 Single OPTO	Orthanc Tower Trough	
Ripley's Believe It or Not!®	520-5137-01	520-5300-00	520-5138-00	520-5052-00 128 X 32 Dots	520-5055-03	515-0173-00 Dual OPTO	515-0174-00 Dual OPTO	4-Ball Trough over Up-Kicker	500-6775-00 OPTO Trnscvr
	Miscellaneous PC Boards:	520-5236-00 X3 Dot Display	OPTO Transmitter / Receiver Amplifier PCB 520-5239-01		for UK ONLY ◀◀◀ Aux. Driver Bd. 520-5068-01	520-5234-00 3-Pos. OPTO	520-5234-00 3-Pos. OPTO	Vari-Target	520-5235-03 X3 Aux. Drvr
Elvis®	520-5137-01	520-5300-00	520-5138-00	520-5052-00 128 X 32 Dots	520-5055-03	515-0173-00 Dual OPTO	515-0174-00 Dual OPTO	4-Ball Trough over Up-Kicker	
	Miscellaneous PC Boards:				for UK ONLY ◀◀◀ Aux. Driver Bd. 520-5068-01				
The Sopranos℠	520-5137-01	520-5300-00	520-5138-00	520-5052-00 128 X 32 Dots	520-5055-03	515-0173-00 Dual OPTO	515-0174-00 Dual OPTO	4-Ball Trough over Up-Kicker	
	Miscellaneous PC Boards:				for UK ONLY ◀◀◀ Aux. Driver Bd. 520-5068-01				
NASCAR® and [NDSE]	520-5137-01	520-5300-00	520-5138-00	520-5052-00 128 X 32 Dots	520-5055-03	515-0173-00 Dual OPTO	515-0174-00 Dual OPTO	4-Ball Trough over Up-Kicker	500-6775-00 OPTO Trans. (Qty. 16) Switch Detect.
	Miscellaneous PC Boards:	520-5235-03 X3 Aux. Drvr	OPTO Transmitter / Receiver Amplifier PCB 520-5239-01		for UK ONLY ◀◀◀ Aux. Driver Bd. 520-5068-01				
Grand Prix	520-5137-01	520-5300-00	520-5138-00	520-5052-00 128 X 32 Dots	520-5055-03	515-0173-00 Dual OPTO	515-0174-00 Dual OPTO	4-Ball Trough over Up-Kicker	500-6775-00 OPTO Trans. (Qty. 16) Switch Detect.
	Miscellaneous PC Boards:	520-5235-03 X3 Aux. Drvr	OPTO Transmitter / Receiver Amplifier PCB 520-5239-01		for UK ONLY ◀◀◀ Aux. Driver Bd. 520-5068-01				

Game Name	I/O Power Driver**	CPU / Sound**	Disp. Power Supply	Dot Matrix Display	Dual OPTO Transmitter	Dual OPTO Receiver	Dual OPTO Transceiver	OPTO Transceiver Miscellaneous
World Poker Tour™ (WPT)	**520-5249-00** Backbox	**520-5246-00** Backbox	520-5138-00 Backbox	520-5052-00 128 X 32 Dots	515-0173-00 4-Ball Trough	515-0174-00 4-Ball Trough	500-6775-00 4 Switch Pairs (Qty. 8)	520-5251-00 'U' 1/per PCB Jail Bars Up Ace/Hole Mech
	Miscellaneous **PCBs :**	520-5254-00 50V Step-Up Drv	520-5250-14 14LED 5X7 Disp.	520-5239-01 OPTO Amplifier	520-5247-00 Ace/Hole Mech	520-5248-00 Ace/Hole Mech		520-5252-04 'U' 4/per PCB Drop Targets 4- & 8- Banks
The Simpsons™ Kooky Carnival	**520-5249-00** Back Door	**520-5246-00** Back Door	520-5138-00 Cabinet Rear	520-5052-00 128 X 32 Dots			**520-5253-00-ASY** Coin Drop (Qty. 11)	
	Miscellaneous **PCBs :**	515-5742-00 Shaker PCB	500-6700-00 Relay *(incl. Wiring + Conn.)*					
©Disney's Pirates of the Caribbean	**520-5249-00** Backbox	**520-5246-00** Backbox	520-5138-00 Backbox	520-5052-00 128 X 32 Dots	515-0173-00 4-Ball Trough	515-0174-00 4-Ball Trough	500-6775-00 5 Switch Pairs (Qty. 10)	
	Miscellaneous **PCBs :**	520-5239-01 OPTO Amp. (X3)	511-5024-03 Relay *(incl. Wiring + Conn.)*					
		520-5238-00 : H-E-A-R-T LED PCB						
Family Guy™	**520-5249-00** Backbox	**520-5246-00** Backbox	520-5138-00 Backbox	520-5052-00 128 X 32 Dots	515-0173-00 4-Ball Trough	515-0174-00 4-Ball Trough	500-6775-00 3 Switch Pairs (Qty. 6)	520-5252-01 'U' 1/per PCB Drop Target 1-Bank
	Miscellaneous **PCBs :**	520-5239-01 OPTO Amp. (X2)	520-5261-00 Stepper Motor	511-5042-01 Trgt. Sensor (X2)			500-6775-01 1 Switch Pair (Qty. 2)	520-5252-04 'U' 4/per PCB Drop Target 4-Bank
		511-5046-00 : Mini Playfield Lamp PCB						
Spider-Man™	**520-5249-00** Backbox	**520-5246-00** Backbox	520-5138-00 Backbox	520-5052-00 128 X 32 Dots	515-0173-00 4-Ball Trough	515-0174-00 4-Ball Trough	500-6775-00 3 Switch Pairs (Qty. 6)	
	Miscellaneous **PCBs :**	520-5239-01 OPTO Amp. (X2)						

APPENDIX D

Board Type Table

Game Name	Flipper	Sound	Power Supply	Display X-Digit
• Laser War	2-Flipper **Board Not Required**	***initial:*** 520-5002-00 ***replaced with:*** 520-5002-02 *520-5002-01 was not used.*	520-5000-00	Master: 520-5004-00 plus: 520-5005-00 (Qty. 2): 7 Digit Alpha/Numeric 520-5006-00 (Qty. 2): 7 Digit Numeric 520-5007-00 (Qty. 1): 4 Digit Numeric
• Secret Service • Torpedo Alley	3-Flipper **Board Not Required**	520-5002-02		520-5014-01 7 Digit Alpha/Numeric Combined
• Time Machine	2-Flipper **Board Not Required**			
• Playboy 35th Anniversary *	520-5033-00 2-Flipper *(*only for 100 games of Playboy 35th Anniv. & ABC Mon. Night Football)*			520-5030-00 16 Digit Alpha/Numeric Combined
• ABC Monday Night Football * • *Robocop* • *Phantom of the Opera* • *Back to the Future*				
• The Simpsons		520-5002-**03**		

Game Name	Flipper	Sound	Power Supply	Dot Matrix Display	Display Controller	OPTO Transmitter	OPTO Receiver	OPTO Apllication
• Checkpoint • Teenage Mutant Ninja Turtles	520-5033-00 2-Flipper	520-5002-03	520-5047-00	520-5042-00 128 X 16				
• Batman • Star Trek 25th Anniv. • Hook		520-5050-01						
• Lethal Weapon 3			520-5047-01	520-5052-00 128 X 32	520-5055-00			
• Star Wars • Rocky & Bull-winkle & Friends		520-5050-02						
• Jurassic Park	520-5076-00 3-Flipper		520-5047-02					
• Last Action Hero	520-5070-00 2-Flipper	520-5050-03						
• Tales from the Crypt	520-5076-00 3-Flipper				520-5055-01			
• The Who's Tommy		520-5077-00						
• WWF Royal Rumble	**520-5070 / 5080 -00** 4-Flipper (2X2)							
• Guns N' Roses	520-5076-00 3-Flipper							
• Maverick		520-5050-03	520-5047-03	520-5075-00 192 X 64	520-5092-01	520-5102-00 Single OPTO	520-5103-00 Single OPTO	Paddle Boat Wheel Enter
• Mary Shelley's Frankenstein	520-5076-00 3-Flipper	520-5077-00						
• Baywatch	**520-5070 / 5080 -00** 4-Flipper (2X2)	520-5126-02				520-5124-00 Single OPTO	520-5125-00 Single OPTO	5-Ball Trough over Up-Kicker
• Batman Forever	520-5076-00 3-Flipper					520-5124-00 Single OPTO	520-5125-00 Single OPTO	4-Ball Trough over Up-Kicker

Miscellaneous Boards (Lamp Boards & Relay Boards) not listed above can be found in each individual game manual.

APPENDIX E

Flipper Coil (White Star Board System* & S.A.M. System** Only) Table

SAM

Typical Coil Diode 1N4004 unless noted otherwise (Diode Top = above lugs next to windings; Diode Below (Bottom) = under lugs opposite of windings).

STANDARD COILS (TYPICAL APPLICATIONS)		
Ga.-Turn	**Res (Ω)**	**SPI Part Number and Comments**
20-400	1.0 Ω	090-5021-*use* : **-00** Diode Top
22-500	1.7 Ω	090-5017-*use* : -00 Diode Top
22-600	2.2 Ω	090-5017-*use* : -0B Diode Below // **-0T** Diode Top
23-700	3.1 Ω	090-5022-*use* : -0B Diode Below // **-0T** Diode Top
23-750	3.4 Ω	090-5019-*use* : -00 Diode Top
23-800	3.6 Ω	090-5001-*use* : -0B Diode Below // **-0T** Diode Top // **-NL** No Lugs 11" Leads // **-ND** No Diode
23-840	4.0 Ω	090-5005-*use* : -00 Diode Top
23.5-765	3.6 Ω	090-5037-*use* : -03 Diode Top
24-900	5.0 Ω	090-5002-*use* : -02 Diode Top // **-10** No Lugs 14" Leads
24-940	5.5 Ω	090-5036-*use* : -0B Diode Below // **-0T** Diode Top *use* **090-5051-01** No Lugs 11" Leads
25-1240	9.3 Ω	090-5034-*use* : -00 Diode Below
26-1200	10.3 Ω	090-5044-*use* : -0B Diode Below // **-0T** Diode Top // **-NL** No Lugs 11" Leads // **-ND** No Diode
27-1300	14.2 Ω	090-5003-*use* : -0T Diode Top
27-1400	14.7 Ω	090-5015-*use* : -00 Diode Below
27-1400		**511-5031-00** *Special App.: No Diode / Lugs + Conn.*
27-1500	16.3 Ω	090-5004-*use* : -0B Diode Below // **-0T** Diode Top
29-2000	33.6 Ω	090-5016-*use* : -00 Diode Top
LARGE, MEDIUM & MINI COILS (MAGNET APPLICATIONS)		
20.5-480	2.9 Ω	090-5064-*use* : -02 No Lugs *or* Core; 14" Leads // Large
22-650	4.3 Ω	090-5042-*use* : -00 No Lugs *or* Core; 6" Leads // Large **-01** No Lugs *or* Core; 12" Leads // Large
24-780	8.0 Ω	090-5061-*use* : -00 No Lugs *or* Core; 6" Lds. // Medium
29-1000	15.2 Ω	090-5059-*use* : -00 Lugs + Diode + Magnet Core // Mini
31-1500	52.0 Ω	090-5054-00 : Straight Lugs + Diode + Mag Core // Mini 090-5055-00 : 90° Lugs + Diode + Magnet Core // Mini

Please Note: *Ohm values may vary + / – .03 depending on meter calibration.*

Ordering Note: *Coils typically should not come with Coil Sleeves.* ***IF A SLEEVE EXISTS****, ensure it is the correct sleeve for the application usage. For the correct Coil Sleeve, refer to the Game Assembly Drawing the coil exists on and order separately.*

LARGE COILS (FLIPPERS & SPECIAL APPLICATIONS)		
Ga.-Turn	**Res (Ω)**	**SPI Part Number and Comments**
21-900	*call* Ω	090-5020-*use* : **-01** 3-Lugs + 1N4004 & 1N5404 Diodes **-10** Diode Top <BROWN><RED>
22-750 / 30-2600	2.6 Ω / 92.0 Ω	090-5011-*use* : **-00 DUAL WND COIL** // 3-Lugs Diode x2
22-900	3.45 Ω	090-5020-*use* : -20T Diode Top <YELLOW> // **-20-ND** No Diode
22-1080	4.2 Ω	090-5032-*use* : -0B D. Below // **-0T** D. Top <YEL-GRN> **-NL** No Diode
23-620 / 30-2600	2.4 Ω / 75.0 Ω	090-5006-*use* : -00 **DUAL WND COIL** // 3-Lugs Diode x2
23-700 / 30-2600	3.0 Ω / 83.5 Ω	090-5013-*use* : -00 **DUAL WOUND COIL** // Diode Top
23-800 / 30-2600	2.4 Ω / 90.5 Ω	090-5012-*use* : -00 **DUAL WOUND COIL** // Diode Top
23-900	4.05 Ω	090-5020-*use* : -30 Diode Top <GREEN>
23-1100	5.1 Ω	090-5030-*use* : -0T Diode Top <ORANGE> **-ND** No Diode
23-1200	7.1 Ω	090-5008-*use* : -00 Diode Top <BLACK>
23-1500	4.4 Ω	090-5062-*use* : -00 Diode Top <BLUE>
24-1570	9.5 Ω	090-5025-*use* : -00 Diode Top <BLUE>
25-1400	*call* Ω	090-5067-*use* : -0T Diode Top <RED>
25-1600	*call* Ω	090-5068-*use* : -0T Diode Top <WHITE>
25-1800	13.8 Ω	090-5041-*use* : -0T Diode Top <BLUE-GREEN>
MINI COILS (RESET / TRIP APPLICATIONS)		
27-950	*call* Ω	090-5046-*use* : -01 Diode Top
28-1050	11.5 Ω	090-5046-*use* : -00 Diode Top
27-880	*call* Ω	500-6976-01 No Lugs *or* Diode + 6" Leads & Conn.
31-590	*call* Ω	090-5010-*use* : -00 Diode Top
32-1250	35.0 Ω	**515-6916-01 :** *includes Flap & Screw* <YELLOW>
32-1800	50.2 Ω	090-5031-*use* (515-6110-00) : -0B Diode Below // **-0T** Diode Top *use 515-# to include mounting & armature brackets*
33-1590	59.0 Ω	**515-6916-00 :** *includes brackets* <WHITE>

Flipper Coil (White Star Board System* Only) Table

GAME NAME	Nº of Flippers	FLIPPERS SPI Nº / GAUGE-TURNS / Color		FLIPPERS no E.O.S. Switch SPI Nº / GAUGE-TURNS / Color	
		LOWER LEFT	LOWER RIGHT	UPPER LEFT	UPPER RIGHT
**** Note:*** *For complete Appendix Information for Games* ***Laser War*** *through* ***Batman Forever****, see any Service Game Manual between* ***Apollo 13*** *through* ***Ripley's Believe It or Not!****; or order CD-R, 970-2003-00 (****The Simpsons™ Pinball Party, Terminator® 3*** *and* ***The Lord of the Rings™****).*					
Apollo 13	2	090-5032-0T **22-1080 -YEL-GRN-**	SAME	Not Used	Not Used
Golden Eye	2	090-5032-0T **22-1080 -YEL-GRN-**	SAME	Not Used	Not Used
Twister	2	090-5020-20T **22-900 -YELLOW-**	090-5032-0T **22-1080 -YEL-GRN-**	Not Used	Not Used
ID4: Independence Day	3	090-5032-0T **22-1080 -YEL-GRN-**	SAME	Not Used	090-5020-30 **23-900 -GREEN-**
Space Jam †	2	090-5032-0T **22-1080 -YEL-GRN-**	090-5020-20T **22-900 -YELLOW-**	Not Used	Not Used
The Star Wars Trilogy - Special Edition †	2	090-5032-0T **22-1080 -YEL-GRN-**	SAME	Not Used	Not Used
The Lost World: Jurassic Park †	2	090-5032-0T **22-1080 -YEL-GRN-**	SAME	Not Used	Not Used
The X-Files †	2	090-5032-0T **22-1080 -YEL-GRN-**	SAME	Not Used	Not Used
Starship Troopers †	3	090-5030-0T **23-1100 -ORANGE-**	SAME	Not Used	090-5032-0T **22-1080 -YEL-GRN-**
Viper Night Drivin' †	2	090-5030-0T **23-1100 -ORANGE-**	SAME	Not Used	Not Used
Lost In Space †	2	090-5030-0T **23-1100 -ORANGE-**	090-5032-0T **22-1080 -YEL-GRN-**	Not Used	Not Used
Godzilla †	2	090-5032-0T **22-1080 -YEL-GRN-**	SAME	Not Used	Not Used
South Park †	2	090-5030-0T **23-1100 -ORANGE-**	SAME	Not Used	Not Used

† Coil Part Numbers ending with a "**T**" signifies the Diode is on the top of the lug *(on the coil-winding side)*;
Coil Part Numbers ending with a "**B**" signifies the Diode is on the bottom of the lugs.

Table continued on the next page.

APPENDIX E

Flipper Coil (White Star Board System* & S.A.M. System** Only) Table

GAME NAME	№ of Flippers	FLIPPERS w/E.O.S. Switch SPI № / GAUGE-TURNS / Color		FLIPPERS no E.O.S. Switch SPI № / GAUGE-TURNS / Color	
		LOWER LEFT	LOWER RIGHT	UPPER LEFT	UPPER RIGHT
Harley-Davidson® † *and 1st through 3rd Editions*	2	090-5032-0T **22-1080 -YEL-GRN-**	090-5030-0T **23-1100 -ORANGE-**	Not Used	Not Used
Striker Xtreme (NFL) †	3	090-5032-0T **22-1080 -YEL-GRN-**	090-5030-0T **23-1100 -ORANGE-**	090-5030-0T **23-1100 -ORANGE-**	Not Used
Sharkey's Shootout †	3	090-5030-0T **23-1100 -ORANGE-**	SAME	090-5030-0T **23-1100 -ORANGE-**	Not Used
High Roller Casino †	2	090-5020-20T **22-900 -YELLOW-**	090-5032-0T **22-1080 -YEL-GRN-**	Not Used	Not Used
Austin Powers™ †	2	090-5020-30 **23-900 -GREEN-**	090-5030-0T **23-1100 -ORANGE-**	Not Used	Not Used
MONOPOLY® †	3	090-5032-0T **22-1080 -YEL-GRN-**	SAME	Not Used	090-5062-0T **23-1500 -BLUE-**
Playboy †	2	090-5030-0T **23-1100 -ORANGE-**	SAME	Not Used	Not Used
RollerCoaster Tycoon™ †	4	090-5032-0T **22-1080 -YEL-GRN-**	SAME	090-5067-0T **25-1400 -RED-**	090-5068-0T **25-1600 -WHITE-**
The Simpsons™ Pinball Party †	6** (5 with Flipper Bats)	090-5032-0T **22-1080 -YEL-GRN-**	SAME	Not Used	090-5030-0T **23-1100 -ORANGE-**
		** *The Homer Head Assembly is affixed to an Upr. Rt. Style Flipper (no E.O.S. Switch):*	** 090-5020-20T **22-900 -YELLOW-**	Flippers (Mini-Bats) on 2nd Level Playfield: 090-5041-00T **25-1800 -BLU-GRN-**	090-5025-00 **24-1570 -BLUE-**
Terminator® 3: Rise of the Machines™ †	2	090-5032-0T **22-1080 -YEL-GRN-**	SAME	Not Used	Not Used
The Lord of the Rings™ †	2	090-5020-20T **22-900 -YELLOW-**	SAME	Not Used	Not Used
Ripley's Believe It or Not!® †	3	090-5032-0T **22-1080 -YEL-GRN-**	SAME	Not Used	090-5067-00T **25-1400 -RED-**
Elvis® †	4	090-5020-20T **22-900 -YELLOW-**	SAME	090-5020-30 **23-900 -GREEN-**	SAME
The Sopranos℠ †	2	090-5032-0T **22-1080 -YEL-GRN-**	SAME	Not Used	Not Used
NASCAR® and [NDSE] †	2	090-5030-0T **23-1100 -ORANGE-**	SAME	Not Used	Not Used
Grand Prix †	2	090-5030-0T **23-1100 -ORANGE-**	SAME	Not Used	Not Used

† Coil Part Numbers ending with a "**T**" signifies the Diode is on the top of the lug *(on the coil-winding side)*; Coil Part Numbers ending with a "**B**" signifies the Diode is on the bottom of the lugs.

** S.A.M. System Games **DO NOT REQUIRE DIODES**. If you use a coil from your stock which has a diode, remove it **ONLY FOR** S.A.M. System Games.

World Poker Tour™ (WPT)**	4	090-5032-ND **22-1080 [NO DIODE]**	SAME	090-5030-ND **23-1100 [NO DIODE]**	SAME
©Disney's Pirates of the Caribbean**	2	090-5030-ND **23-1100 [NO DIODE]**	SAME	Not Used	Not Used
Family Guy™ **	3 Norm.	090-5030-ND **23-1100 [NO DIODE]**	SAME	090-5062-ND **23-1500 [NO DIODE]**	Not Used
	2 Mini	090-5046-01-ND **27-950 [NO DIODE]**	SAME		
Spider-Man™ **	3	090-5032-ND **22-1080 [NO DIODE]**	SAME	Not Used	090-5032-ND **22-1080 [NO DIODE]**

APPENDIX E

Generic Coil Cross-Reference Guide † ‡

Flipper Coil Table ‡ ††

GAME NAME	Nº of Flippers	FLIPPERS w/E.O.S. Switch SPI Nº / GAUGE-TURNS / Color		FLIPPERS no E.O.S. Switch SPI Nº / GAUGE-TURNS / Color	
		LOWER LEFT	LOWER RIGHT	UPPER LEFT	UPPER RIGHT
Laser War ‡	2	090-5011-00 **22-750 / 30-2600**	SAME	Not Used	Not Used
Secret Service ‡	3	090-5006-00 **23-620 / 30-2600**	SAME	Not Used	090-5006-00 **23-620 / 30-2600**
Torpedo Alley ‡	3	090-5011-00 **22-750 / 30-2600**	090-5013-00 **23-700 / 30-2600**	Not Used	090-5012-00 **23-800 / 30-2600**
Time Machine ‡	2	090-5011-00 **22-750 / 30-2600**	SAME	Not Used	Not Used
‡ These coils are dual-wound.					
Playboy 35th Anniversary ††	2	090-5020-02 **22-900 -YEL-YEL-**	SAME	Not Used	Not Used
ABC Monday Night Football ††	2	090-5020-02 **22-900 -YEL-YEL-**	SAME	Not Used	Not Used
†† A very small % of these games used a 090-5020-20 coil which used a proto-type Solid State Flipper System. The two types of coils both are 22-900 coils; the only difference is the addition of the 1N5404 Diode on the (-02) coils which was used in the Deger Design.					
Robocop	2	090-5020-20 **22-900 -YEL-YEL-**	SAME	Not Used	Not Used
Phantom of the Opera	2	090-5020-20 **22-900 -YEL-YEL-**	SAME	Not Used	Not Used
Back to the Future	2	090-5020-20 **22-900 -YEL-YEL-**	SAME	Not Used	Not Used
The Simpsons	2	090-5020-20 **22-900 -YEL-YEL-**	SAME	Not Used	Not Used
Checkpoint	2	090-5020-20 **22-900 -YEL-YEL-**	SAME	Not Used	Not Used
Teenage Mutant Ninja Turtles	2	090-5020-30 **23-900 -GRN-GRN-**	SAME	Not Used	Not Used
Batman	2	090-5020-30 **23-900 -GRN-GRN-**	SAME	Not Used	Not Used
Star Trek 25th Anniversary	2	090-5020-30 **23-900 -GRN-GRN-**	SAME	Not Used	Not Used
Hook	2	090-5030-00 **23-1100 -ORG-ORG-**	090-5020-30 **23-900 -GRN-GRN-**	Not Used	Not Used
Lethal Weapon 3	2	090-5030-00 **23-1100 -ORG-ORG-**	SAME	Not Used	Not Used
Star Wars	2	090-5032-00 **22-1080 -YEL-GRN-**	SAME	Not Used	Not Used
Rocky & Bullwinkle & Friends	2	090-5020-30 **23-900 -GRN-GRN-**	SAME	Not Used	Not Used
Jurassic Park	3	090-5020-30 **23-900 -GRN-GRN-**	SAME	Not Used	090-5030-00 **23-1100 -ORG-ORG-**

Table continued on the next page.

APPENDIX E

Flipper Coil Table †

GAME NAME	Nº of Flippers	FLIPPERS w/E.O.S. Switch		FLIPPERS no E.O.S. Switch	
		SPI Nº / GAUGE-TURNS / Color		SPI Nº / GAUGE-TURNS / Color	
		LOWER LEFT	LOWER RIGHT	UPPER LEFT	UPPER RIGHT
Last Action Hero	2	090-5020-30 **23-900 -GRN-GRN-**	SAME	Not Used	Not Used
Tales from the Crypt	3	090-5032-00 **22-1080 -YEL-GRN-**	SAME	Not Used	090-5041-00 **25-1800 -BLU-GRN-**
The Who's Tommy	3	090-5020-30 **23-900 -GRN-GRN-**	SAME	090-5041-00 **25-1800 -BLU-GRN-**	Not Used
WWF Royal Rumble	4	090-5032-00 **22-1080 -YEL-GRN-**	SAME	090-5041-00 **25-1800 -BLU-GRN-**	SAME
Guns N' Roses	3	090-5032-00 **22-1080 -YEL-GRN-**	SAME	090-5030-00 **23-1100 -ORG-ORG-**	Not Used
Maverick	3	090-5032-00 **22-1080 -YEL-GRN**	SAME	Not Used	090-5032-00 **22-1080 -YEL-GRN-**
Mary Shelley's Frankenstein	3	090-5030-00 **23-1100 -ORG-ORG-**	SAME	Not Used	090-5030-00 **23-1100 -ORG-ORG-**
Baywatch	4	090-5030-00 **23-1100 -ORG-ORG-**	090-5020-30 **23-900 -GRN-GRN-**	090-5025-00 **24-1570 -See Note-**	090-5030-00 **23-1100 -ORG-ORG-**
Batman Forever	3	090-5032-00 **22-1080 -YEL-GRN-**	090-5020-20 **22-900 -YEL-YEL-**	Not Used	090-5020-30 **23-900 -GRN-GRN-**
Apollo 13	2	090-5032-00 **22-1080 -YEL-GRN-**	SAME	Not Used	Not Used
Golden Eye	2	090-5032-00 **22-1080 -YEL-GRN-**	SAME	Not Used	Not Used
Twister	2	090-5020-20 **22-900 -YEL-YEL-**	090-5032-00 **22-1080 -YEL-GRN-**	Not Used	Not Used
ID4: Independence Day	3	090-5032-00 **22-1080 -YEL-GRN-**	SAME	Not Used	090-5020-30 **23-900 -GRN-GRN-**
Space Jam †	2	090-5032-00T **22-1080 -YEL-GRN-**	090-5020-20T **22-900 -YEL-YEL-**	Not Used	Not Used
The Star Wars Trilogy - Special Edition †	2	090-5032-00T **22-1080 -YEL-GRN-**	SAME	Not Used	Not Used
The Lost World: Jurassic Park †	2	090-5032-00T **22-1080 -YEL-GRN-**	SAME	Not Used	Not Used
The X-Files †	2	090-5032-00T **22-1080 -YEL-GRN-**	SAME	Not Used	Not Used
Starship Troopers †	3	090-5030-00T **23-1100 -ORG-ORG-**	SAME	Not Used	090-5032-00T **22-1080 -YEL-GRN-**
Viper Night Drivin' †	2	090-5030-00T **23-1100 -ORG-ORG-**	SAME	Not Used	Not Used
Lost In Space †	2	090-5030-00T **23-1100 -ORG-ORG-**	090-5032-00T **22-1080 -YEL-GRN-**	Not Used	Not Used
Godzilla †	2	090-5032-00T **22-1080 -YEL-GRN-**	SAME	Not Used	Not Used
South Park †	2	090-5030-00T **23-1100 -ORG-ORG-**	SAME	Not Used	Not Used
Harley-Davidson® † *and* Harley-Davidson® 2nd Ed. †	2	090-5032-00T **22-1080 -YEL-GRN-**	090-5030-00T **23-1100 -ORG-ORG-**	Not Used	Not Used
Striker Xtreme (NFL) †	3	090-5032-00T **22-1080 -YEL-GRN-**	090-5030-00T **23-1100 -ORG-ORG-**	090-5030-00T **23-1100 -ORG-ORG-**	Not Used
Sharkey's Shootout †	3	090-5030-00T **23-1100 -ORG-ORG-**	SAME	090-5030-00T **23-1100 -ORG-ORG-**	Not Used
High Roller Casino †	2	090-5020-20T **22-900 -YEL-YEL-**	090-5032-00T **23-1080 -YEL-GRN-**	Not Used	Not Used
Austin Powers™ †	2	090-5020-30 **23-900 -GRN-GRN-**	090-5030-00T **23-1100 -ORG-ORG-**	Not Used	Not Used
MONOPOLY® †	3	090-5032-00T **22-1080 -YEL-GRN-**	SAME	Not Used	090-5062-00T **23-1500 -BLU-BLU-**
Playboy †	2	090-5030-00T **23-1100 -ORG-ORG-**	SAME	Not Used	Not Used
RollerCoaster Tycoon™ †	4	090-5032-00T **22-1080 -YEL-GRN-**	SAME	090-5067-00T **25-1400 -RED-RED-**	090-5068-00T **25-1600 -WHT-WHT**
The Simpsons™ Pinball Party †	6* (5 with Flipper Bats)	090-5032-00T **22-1080 -YEL-GRN-**	SAME	Not Used	090-5030-00T **23-1100 -ORG-ORG-**
		** The Homer Head Assembly is affixed to an Upr. Rt. Style Flipper (no E.O.S. Switch):*		**Flippers (Mini-Bats) on 2nd Level Playfield:**	
			* 090-5020-20T **22-900 -YEL-YEL-**	090-5041-00T **25-1800 -BLU-GRN-**	090-5025-00T **24-1570 -See Note-**
Terminator® 3: Rise of the Machines™ †	2	090-5032-00T **22-1080 -YEL-GRN-**	SAME	Not Used	Not Used
The Lord of the Rings™ †	2	090-5020-20T **22-900 -YEL-YEL-**	SAME	Not Used	Not Used
Ripley's Believe It or Not!® †	3	090-5032-00T **22-1080 -YEL-GRN-**	SAME	Not Used	090-5067-00T **25-1400 -RED-RED-**

† Coil Part Nºs ending with a "T" signifies the Diode is on the top of the lug (on the coil-winding side); Coil Part Nºs ending with a "B" signifies the Diode is on the bottom of the lugs.

APPENDIX F

Motor Specification (White Star Board System* Only) Table

Game Name	Function	Specifications	Part Numer
Apollo 13	Rocket Up/Down Movement	Bowman Motor 24VAC 60Hz 3W 6 RPM CCW	515-6383-00 *incl. Connector*
	Moon Unit Rotational Orbit	Multi Products Motor 24VAC 50/60Hz 3W 6 RPM CCW	515-6487-00 *incl. Connector*
	Shaker	Johnson Motor *(Vibrator)* 10.5VDC 10 AMP 2950 RPM CW	041-5029-**00** *MOTOR ONLY*
Golden Eye	Satellite Left/Right Movement	Bowman Motor 24VAC 60Hz 3W 6 RPM CW	515-6528-00 *incl. Connector*
Twister	Spinning Disc with Magnet	Multi Products Motor 24VAC *(041-5026-00)* 50/60Hz 3W 325 RPM CCW	515-6347-00 *incl. Connector*
	Backbox Fan (Tornado Wind)	Multi Products Motor 24VAC *(041-5052-00)* 50/60Hz 3W 3600 RPM CW	515-6531-00 *incl. Connector*
ID4: Independence Day	Alien Head Open/Close Movement	Servo Motor *(94322)*	041-5045-00 *MOTOR ONLY*
SPACE JAM (NO MOTOR USED)			
The Star Wars Trilogy - S.E.	X-Wing Left/Right Movement	Bowman Motor 24VAC *(041-5058-00)* 60Hz 3W 10 RPM CCW	515-6383-01 *incl. Connector*
The Lost World: Jurassic Park	Snagger & Center Link Lift Up/Down Movement	Multi Products Motor 20VDC *(041-5059-03)* 9 RPM Non-Directional	515-6715-03 *incl. Connector*
	Shaker	Johnson Motor *(Vibrator)* 10.5VDC 10 AMP 2950 RPM CW	041-5029-**00** *MOTOR ONLY*
The X-Files	X-File Cabinet Lift Up/Down Movement	Multi Products Motor 20VDC 9 RPM CCW	041-5057-00 *MOTOR ONLY*
Starship Troopers	Warrior Bug Forward/Reverse Movement	Haydon Switch & Instrument, Inc. Stepper Motor 12VDC 4.6W *(041-5062-00)*, Series 36000: 1.4"ø *(Non-Captive Shaft **not included**)* HSI #36864-12 *(Unipolar)* Travel per Step: .004 Step Angle: 15°	515-6794-00 *incl. Connector* **Requires 7" Shaft:** 530-5503-00
VIPER NIGHT DRIVIN' (NO MOTOR USED)			
Lost In Space	Spinning Disc with Magnet	Multi Products Motor 24VAC *(041-5046-00)* 50/60Hz 3W 325 RPM CCW	515-6347-00 *incl. Connector*
Godzilla	Shaker ‡	Multi #3811 0630 Motor (Vibrator) 12VDC 3100 RPM CW *(w/DRL PTS)* ‡	041-5029-**01** *MOTOR ONLY*
SOUTH PARK (NO MOTOR USED)			
Harley-Davidson® *1st through 3rd Editions*	Shaker ‡	Multi #3811 0630 Motor (Vibrator) 12VDC 3100 RPM CW *(w/DRL PTS)* ‡	041-5029-**01** *MOTOR ONLY*
	Motorcycle Lift Up/Down Movement	Autotrol 24VAC *(041-5072-02)* 20 RPM CCW	515-7025-00 *incl. Connector*
Striker Xtreme (NFL)	Goalie (Linebacker) Left to Right Movement	Multi #3590 12VDC *(041-5075-00)* 60 RPM	515-7071-00 *incl. Connector*
Sharkey's Shootout	Mystery Ball Rotating Movement	Hankscraft Motor Model-E 24VAC *(041-5076-00)* 50/60Hz 3W 20 RPM CW	515-7095-00 *incl. Connector*
High Roller Casino	Roulette Wheel Rotating Movement	Multi Products Motor 20VDC *(041-5078-00)* 17 RPM CCW	515-7153-00 *incl. Connector*
	Up/Dn. Ramp in Slot Mach. Lift Up/Down Movement	Haydon Switch & Instrument, Inc. Stepper Motor 12VDC 4.6W *(041-5062-00)*, Series 36000: 1.4"ø *(Non-Captive Shaft **not included**)* HSI #36864-12 *(Unipolar)* Travel per Step: .004 Step Angle: 15°	515-6794-00 *incl. Connector* **Requires Shaft 4¼":** 530-5503-01
Austin Powers™	Time Machine Rotating Movement	Multi Products Motor 24VAC *(041-5079-00)* 50/60Hz 20RPM CCW	515-7141-00 *incl. Connector*
	Laser Beam Left to Right Directional	Autotrol Motor 24VAC *(041-5081-00)* 50/60Hz 4W 10RPM Bi-Directional	515-7171-00 *incl. Connector*
	Dr. Evil Target Lift Up/Down Movement	Hankscraft Motor Model-E 24VAC *(041-5030-00)* 50/60Hz 6RPM CCW	515-5900-00 *incl. Connector*
Monopoly®	Mini-Flipper (Waterworks) Rotating Movement	Multi Prod. Motor & Gear Box #7000 EX00159A 20VDC 50/60Hz 85RPM CC/CCW	041-5083-00 *MOTOR ONLY*
Playboy	Triangular Billboard Rotating Movement	Autotrol Motor *(BD511 150-1387)* 24VAC 50/60Hz 12RPM Bi-Directional	041-5086-02 *MOTOR ONLY*
	Centerfold Mechanism Open/Close Movement	Multi Products *(3680)* Motor 12v DC 10/12 RPM CC/CCW	041-5075-04 *MOTOR ONLY*
	Tease Drop Screen Lift Up/Down Movement	Haydon Switch & Instrument, Inc. Stepper Motor 12VDC 4.6W *(041-5062-00)*, Series 36000: 1.4"ø *(Non-Captive Shaft **not included**)* HSI #36864-12 *(Unipolar)* Travel per Step: .004 Step Angle: 15°	515-6794-00 *incl. Connector* **Requires 7" Shaft:** 530-5503-00

‡ ***Please Note:*** *"-01" Shaker Motor is **Not Compatible** with old Shaker Motor 041-5029-**00** (Shaker Motor Assy. 515-5893-00).*
*THIS NEW MOTOR CAN ONLY BE USED IN NEW SHAKER MOTOR ASSY. 515-5893-**01**.*

Table continued on the next page.

Game Name	Function	Specifications	Part Number
ROLLERCOASTER TYCOON™ (NO MOTOR USED)			
THE SIMPSONS™ PINBALL PARTY (NO MOTOR USED)			
Terminator® 3: Rise of the Machines™	Backbox Ball Shooter Up/Down Movement	Multi Products Motor 24VAC *(041-5079-01)* 21 RPM CW	515-7317-00 *incl. Connector*
The Lord of the Rings™	Balrog *(Motor & Gate)* Open/Close Movement	Multi Prod. Motor 20VDC Series 600B *(or equiv.)* 50/60Hz 10 RPM Bi-Directional	041-5088-01 *MOTOR ONLY*
RIPLEY'S BELIEVE IT OR NOT!® (NO MOTOR USED)			
Elvis®	Elvis™ Front/Back Movement	Haydon Switch & Instrument, Inc. Stepper Motor 12VDC 10W *(041-5089-00)*, *(Non-Captive Shaft **not included**)* *HSI #46868-12-002*	500-6809-00 *incl. Connector* **Requires 7.25" Shaft:** 530-5658-00
	▶▶▶ **OPTIONAL** ◀◀◀ Shaker	Multi #3811 0630 Motor *(Vibrator)* 12VDC *(041-5029-**01**) 3100 RPM (w/DRL PTS)*	515-5893-01 *incl. Connector*
The Sopranos℠	Bada Bing! Girls x2 Rotating Posts Movement	Autotrol Synchronous Motor 24VAC 4W 50/60Hz 45.7/54.9 RPM Bi-Directional	041-5092-00 **w/1" Shaft + 12" Leads**
NASCAR® and [NDSE]	Back Panel Rotating *(Car)* Windmill *(Skill Ball Enter)*	Multi Products Motor & Gear Box 20VDC Model #8000 *(EX-04-073)* 10 RPM	041-5093-00 *MOTOR ONLY*
Grand Prix	Back Panel Rotating *(Car)* Windmill *(Skill Ball Enter)*	Multi Products Motor & Gear Box 20VDC Model #8000 *(EX-04-073)* 10 RPM	041-5093-00 *MOTOR ONLY*
World Poker Tour™ (WPT) (NO MOTOR USED)			
The Simpons™ Kooky Carnival	Bart on Skateboard Left/Right Movement	Multi Products Motor with Crank 24VAC *(041-5095-01)* 50/60Hz 3W 14 RPM	500-6947-01 *incl. Connector*
	Left & Right Ramps Up/Down Movement	Multi Products Motor 24VAC *(041-5048-01)* 50/60Hz 3W 15 RPM CCW *(Qty. 2 in game)*	515-7558-00 *incl. Connector*
	Shaker *(details in SKC Manual, Page **24**)*	Multi #3811 0630 Motor *(Vibrator)* 12VDC 3100 RPM *(w/DRL PTS)*	041-5029-**01** *MOTOR ONLY*
©Disney's Pirates of the Caribbean	Spinning Disk	Multi #3811**R** 0630 Motor *(Vibrator)* 12VDC *(041-5029-**04**)* 3100 RPM *(w/DRL PTS)* *-04 is RoHS compliant; can substitute with -01 domestic*	511-5024-04 *incl. Connector*
	Pirate Ship Sinking/Raising Movement	Multi Products Motor & Gear Box 24VDC Model #7000-DCM 12 RPM	041-5101-00 *MOTOR ONLY*
Family Guy™	Stewie Figurine Left & Right Movement	Stepper Motor NPM PF35T-48D4STD 5V RVB *(041-5102-00 Reference Only)*	511-5043-00 *incl. Connector*
Spider-Man™	Doc Ock, Sandman & 3-Bank Up/Down Movement	Sync. Motor 24VAC 50/60Hz 3W 12 RPM CW *(041-5103-00 Reference Only)*	511-5063-00 *incl. Connector*
	▶▶▶ **OPTIONAL** ◀◀◀ **Shaker Motor Kit** 502-5027-00	Multi #3811**R** 0630 Motor *(Vibrator)* 12VDC *(041-5029-**04**) 3100 RPM (w/DRL PTS)* *-04 is RoHS compliant; can substitute with -01 domestic*	515-5893-01 *incl. Connector*

APPENDIX F

Motor Specification Table

The following table only list games that used motors. *Part Numbers starting with "515-" will include the Wiring Harness & Connector.*

Game Name	Function	Specifications	Part №
ABC Monday Night Football	Goal Post Up/Down Movement	Motor 24v A.C. 60 RPM CW	515-5222-00
Phantom of the Opera	Organ Up/Down Movement	Bowman Motor 24v 60Hz 3W 11 RPM CCW	515-5256-00
Checkpoint	Mag Wheel (in Backbox)	Motor D.C. (KEN)	041-5005-00
	Shaker	Johnson Motor (Vibrator)	041-5002-00
Teenage Mutant Ninja Turtles	Spinning Pizza Ball Deflector	Gear Motor 24v A.C. 325 RPM CW	515-5397-00
Batman	Bar Target Up/Down Movement	Bowman Motor 24v 60Hz 3W 11 RPM CCW	515-5256-00
Star Trek 25th Anniversary	Swinging Target	Bowman Motor 24v 22½ RPM	515-5534-00
	Transporter F/X	Gear Motor 24v A.C. 3½ RPM	500-5421-00
	Cooling Fan (for Transporter F/X)	4½" Motor 12v	041-5014-00
Lethal Weapon 3	Spinning Light	Motor 2½ v A.C. 4000 RPM CCW	041-5017-00
Star Wars	Bar Target Up/Down Movement	Bowman Motor 24v 60hz 3W 11 RPM CCW	515-5256-00
	R2D2 Robot Left/Right Movement	Bowman Motor 24v A.C. 22½ RPM CW	515-5571-00
	Death Star Rotation	Bowman "G" Motor 24v A.C. 60Hz 6 RPM CW	515-5570-00
Rocky & Bullwinkle & Friends	Nell Log "Cutting Blade" Forward/Back Movement	Autotrol Model E Motor 24v 60hz 4W 3 RPM CCW	041-5023-00
Jurassic Park	T-Rex Left/Right Movement	Multi Motor 5v D.C.	041-5025-00
	T-Rex Up/Down Movement	Bowman Motor 24v 11 RPM CW	041-5026-00
	Shaker	Johnson Motor (Vibrator)	041-5002-00
Last Action Hero	Crane Left/Right Movement	Multi Products Motor 12v D.C. #3312 OSC	041-5027-00
	Shaker	Johnson Motor (Vibrator) 10.5v D.C. 10 AMP 2950 RPM CW	041-5029-00
Tales from the Crypt	Tombstone Up/Down Movement	Bowman Motor 24v A.C. 6 RPM CCW	515-5900-00
	Shaker	Johnson Motor (Vibrator) 10.5v D.C. 10 AMP 2950 RPM CW	041-5029-00
The Who's Tommy	Mirror Up/Down Movement	Bowman Motor 24v A.C. 6 RPM CCW	515-5900-00
	Flipper Blinders	Servo Motor (94102)	041-5032-00
	Spinning Airplane Propellers	Motor D.C.	041-5033-00
WWF Royal Rumble	Shaker	Johnson Motor (Vibrator) 10.5v D.C. 10 AMP 2950 RPM CW	041-5029-00
Maverick, The Movie	Turning Paddle Wheel	Motor 24v A.C. 10 RPM	041-5036-00
Mary Shelley's Frankenstein	Creature Head Left/Right Movement	Servo Motor (94102)	041-5032-00
Batman Forever	Cannon Left/Right Movement	Bowman Motor 24v A.C. 60Hz 3W 6 RPM CCW	515-6383-00

APPENDIX G

Part Number Prefix Classification Codes

I. Electrical Source, Energy & Signal Converters
- 010- Transformers
- 031- Speakers
- 090- Solenoids (Coils)
- 150- Filters, Outlets, Varistors, Thermistors
- 200- Fuses

II. Conductors, Connectors & Insulators
- 034- Line Cords
- 036- Cable Assemblies & Wiring Harnesses
- 041- Motors
- 045- Connectors (All Types)
- 055- Lugs (M/F), Pins (M/F), Discs, Ring Terminals, Terminal Strips, etc.
- 060- Polarizing Keys and Conn. Covers
- 077- Lamp Sockets

III. Circuits & Circuit Elements
- 100- ICs
- 110- Transistors
- 112- Diodes (All Types including LEDs & Modules)
- 121- Resistors
- 123- Resistors (Variable & Adjustable)
- 124- Regulators & Bridge Rectifiers
- 125- Capacitors (Radial Lytics & Ferrites)
- 126- Piezo Crystal
- 127- Heatsinks
- 130- Capacitors (Tecates & Ceramics)
- 140- Oscillators (Clocks/Crystals)
- 165- Light Bulbs
- 180- Switches
- 181- Switch Membranes (Pads) & Piezo Sensors
- 190- Relays
- 960- EPROM *(Raw Part)*
- 965- EPROM *(Programmed Part)*

IV. Bolts, Screws, Nuts, Washers & Nails
- 231- Bolts
- 232- Screws (Pan Head)
- 234- Screws (HWH)
- 237- Screws (Misc.)
- 240- Nuts (Misc.)
- 242- Washers (Flat, Round)
- 244- Washers (Split Lock)
- 245- Nyliners
- 246- Washers (Lockers, External Tooth)
- 281- Nails

V. Mechanical Components
- 249- Rivets
- 251- Pins (Dowel), Finishing Nails, Hairpins, Spring Pins and Clevis Pins
- 254- Stand-Offs, Spacers and Shims
- 260- Steel Ball (All Types Steel, Glowing, Delrin, etc.)
- 265- Springs (Extension)
- 266- Springs (Compression)
- 267- Springs (Torsion)
- 269- Springs (Washers - Belleville, Wave)
- 270- Retaining Rings
- 280- Grommets, Bushings and Nyliners
- 283- Bearings

VI. Handles, Locks, Catches, Latches, Keys
- 355- Handles, Locks, Catches, Latches and Keys

VII. Fabricated Parts
- 390- Hinges
- 501- Coin Doors
- 515- Sub-Assemblies
- 520- Printed Circuit Boards (PCBs)
- 522- Display Glass
- 525- Wood Parts
- 530- Screw Machined Parts
- 535- Fabricated Parts
- 545- Molded (Extruded) Plastic and Rubber Parts (Rings, Sleeves, etc.)
- 550- Molded (Inserts)

VIII. In-House Assemblies
- 500- End Product (Systems and Models)
- 502- Kits (Created In-House)
- 505- Cabinets (complete)
- 510- Riveted Sub-Assemblies (In-House)
- 511- Sub-Assemblies (In-House)
- 515- Sub-Assemblies*

  **2 or more 515-'s but still a sub-assembly.*

IX. Bulk Materials
- 600- Braided Wire & Ground Straps
- 601- Stranded Wire
- 602- Ribbon Cable
- 604- Telephone Line Cord
- 605- Sleeving (Shrink Tubing)
- 625- Velcro (non-adhesive)
- 626- Foam Rubber, Foam Pads, Rubber Bumpers (Blue Pads), Tape (All Types) Velcro (adhesive) and String / Rope

X. Miscellaneous
- 000- Tools *(see also 777-)* and Supplies
- 040- Clamps, Ties & Clips
- 042- Pulleys
- 091- Coin Mechs
- 205- Fuse Holders
- 631- Staples
- 660- Glass (Playfield, Backglass, etc.)
- 675- Cleaners
- 705- Packing & Shipping Items
- 755- Instruction, Coin Cards, Ins. Sheets
- 756- Information Sheets, Service Bulletins, Instruction Sheets in Kits and Templates
- 777- Tools (Wrenches and Drivers)
- 780- Manuals
- 802- Decal Kits (comprised of 820's)
- 820- Decals, Mylar and Labels (Sheets/Sets)
- 803- Plastic Kits (comprised of 830's)
- 830- Plastic Pieces (Butyrate Sheets/Sets)
- 880- Toys, Models, Figurines, etc.
- 900- Game Posters

APPENDIX H

Playfield Inserts (Plastic Light Covers)

Patterns: STARBURST **STIPPLE**	**STARBURST CIRCULAR** 5/8" ø **550-5000-XX**	**STARBURST CIRCULAR** 3/4" ø **550-5001-XX**	**STARBURST CIRCULAR** 1" ø **550-5002-XX**	**STARBURST CIRCULAR** 1-3/16" ø **550-5003-XX**	**STARBURST CIRCULAR** 1-1/2" ø **550-5004-XX**
STARBURST CIRCULAR 2-1/4" ø **550-5005-XX**	**STARBURST CIRCULAR** 2-3/4" ø **550-5006-XX**	**PLAIN CIRCULAR** 3/4" ø **550-5007-XX**	**PLAIN CIRCULAR** 1" ø **550-5008-XX**	**PLAIN CIRCULAR** 1-3/16" ø **550-5009-XX**	**PLAIN CIRCULAR** 1-1/2" ø **550-5010-XX**
PLAIN CIRCULAR 2-1/4" ø **550-5011-XX**	**PLAIN CIRCULAR** 2-3/4" ø **550-5012-XX**	**STIPPLE CIRCULAR** 1" ø **550-5048-XX**	**STIPPLE 1" SQUARE** 1 2" **550-5019-XX**	**ROLLOVER BUTTON BASE** **550-5026-XX**	**WHITE STAR** *(only in white)* **545-5015-00**
STIPPLE RECTANGULAR 1-1/2" X 3/4" **550-5018-XX**	**STIPPLE RECTANGULAR** 1-5/8" X 1-1/2" **550-5051-XX**	**STARBURST RECTANGULAR** 2-1/4" X 1-1/8" **550-5044-XX**	**PLAIN RECTANGULAR** 2-1/4" X 1-1/8" **550-5049-XX**	**PLAIN RECTANGULAR** 1-1/4" X 1-1/2" **550-5050-XX**	**PLAIN RECTANGULAR** 2" X 2-1/2" **550-5063-XX**
STARBURST MINI SHIELD 1" X 1" **550-5024-XX**	**STARBURST LARGE SHIELD** **550-5025-XX**	**MINI HOT DOG** 1-5/8" **550-5020-XX**	**BEVEL HOT DOG** 3-1/2" **550-5021-XX**	**PLAIN HOT DOG** 3-1/2" **550-5022-XX**	**BANANA** **550-5023-XX**
STARBURST ARROW-SMALL **550-5013-XX**	**STARBURST ARROW-LARGE** **550-5070-XX**	**STARBURST ARROW-HEAD SMALL** **550-5014-XX**	**STARBURST ARROW-HEAD LARGE** **550-5015-XX**	**STARBURST BULLET** **550-5016-XX**	**STARBURST TRIANGLE** **550-5017-XX**

Note: *The shapes and sizes shown above are not to scale. Some shapes may no longer be available in every color.*

Instructions: Parts which may come in various colors (i.e. targets, some posts, playfield inserts, etc.) end in a 2-digit number which correspond to the color of that part. The "**-XX**" in part number which may come in various colors should be replaced with the desired 2-Digit number corresponding to the color desired below. *Not all colors may be available.*

PLASTIC PART COLOR CHART

Nº	Color	Nº	Color	Nº	Color	Nº	Color	Nº	Color	Nº	Color
-00	**Black** or Solid Clear	-03	Amber	-06	Yellow	-09	Purple	-12	Fluor. Blue	-15	Luminescent
-01	Clear	-04	Green	-07	Orange	-10	Fluor. Orange	-13	Teal Green	-16	Gold
-02	Red	-05	Blue	-08	White	-11	Fluor. Green	-14	Gray	-17	Trans. Brown

APPENDIX I

Anti-Loft Stand-Up Targets

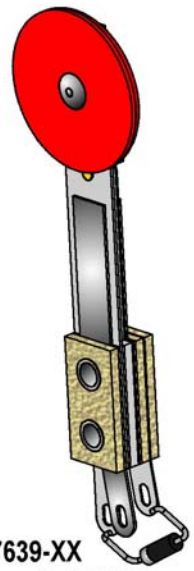

515-7639-XX
1" ø ROUND
ANTI-LOFT STAND-UP
SWITCH & TARGET
RIVETED ASSEMBLY*

515-7581-XX
1" X 1/2" NARROW RECTANGLE
ANTI-LOFT STAND-UP
SWITCH & TARGET
RIVETED ASSEMBLY*

Ordering Note:
-XX REPLACE WITH 2-DIGIT FOR COLOR:
Not all colors available
(colors shown not exact)

-02	Red
-03	Amber
-04	Green
-05	Blue
-06	Yellow
-07	Orange
-08	White

515-7568-XX
1" X 1" SQUARE
ANTI-LOFT STAND-UP
SWITCH & TARGET
RIVETED ASSEMBLY*

(Required on all Stand-Up Targets)
▼Switch Diode, 1N4004
112-5003-00

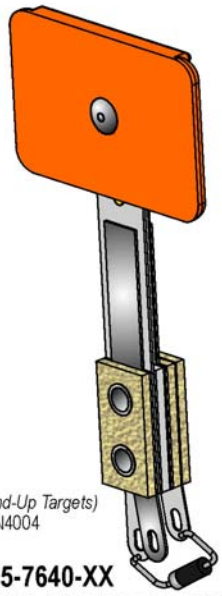

515-7640-XX
1" X 1-1/2" WIDE RECTANGLE
ANTI-LOFT STAND-UP
SWITCH & TARGET
RIVETED ASSEMBLY*

*Some targets may require the lugs position be changed to the left *or* to the right, depending on the application; these targets will have a different part number and are called out in the game manual they are used in *(see Section 4, Chapter 1, Parts Identification & Location, Playfield ... - Switches.) Review the game manual for the game desired for the original target used or application.*

For Anti-Loft Application use
Large Foam Pad,
5/8" X 7/16" X 3/16" Thick
626-5078-00

For > Light < Anti-Loft Application use
Small Foam Pad,
7/16" X 7/16" X 1/8" Thick
626-5029-00

Foam Pads have self-adhesive backing

or

Anti-Loft Switch Back Plate ▼
535-9823-01

ASM. REF. IN-HOUSE USE ONLY:
Light Anti-Loft Stand-Up Target Assemblies which includes the Anti-Loft Switch Back Plate, Switch Mounting Bracket and Foam Pad *(Small)*: 500-5835-XX (ROUND), 500-5857-XX (NARROW), 500-5232-XX (SQUARE) and 500-5321-XX (RECTANGLE).

Anti-Loft Stand-Up Target Assemblies which includes the Anti-Loft Switch Back Plate, Switch Mounting Bracket and Foam Pad *(Large)*: 500-7062-XX (ROUND), 500-6985-XX (NARROW), 500-6984-XX (SQUARE) and 500-7063-XX (RECTANGLE).

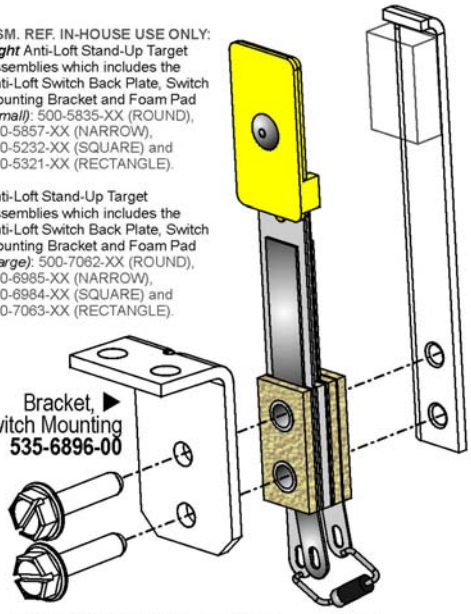

Bracket, ▶
Switch Mounting
535-6896-00

▲ #6-32 X 5/8" Slotted HWH Swage (Zinc) Screws (Qty. 2/per) **237-5976-04**

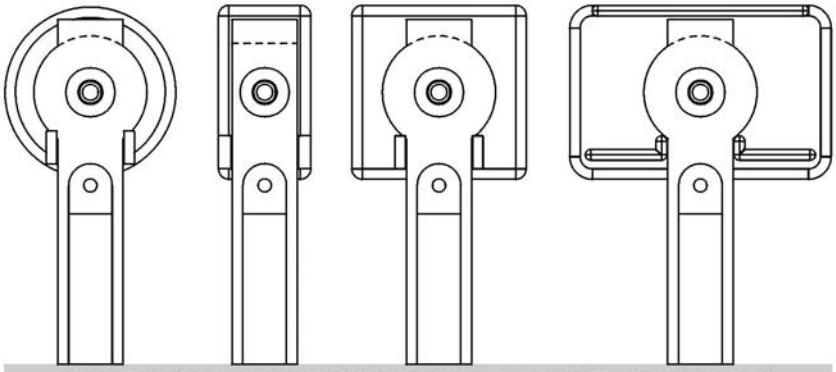

REAR VIEWS OF ANTI-LOFT TARGET & SWITCH ASSEMBLIES

The material of the Anti-Loft Switch has been extended higher to be used with the Anti-Loft Switch Back Plate. ***IMPORTANT:*** *Switch & Target Assemblies (**X**) **without** the extension (the predecessors) **SHOULD NOT** be used with an **Anti-Loft** Switch Back Plate (shown left).*

APPENDIX REFERENCE FOR PINBALL GAMES WHICH USED THE BELOW SWITCH & TARGET ASSEMBLIES NOTE:

*The Switch & Target Assemblies (**X**) **without** the extension have the following part numbers*: 515-5966-XX (Round), 515-5967-XX (Narrow), 515-5162-XX (Square) and 515-6027-XX (Rectangle) and should only be used with the Switch Back Plate (shown right), 535-6452-00 and Small Foam Pad, 626-5029-00.*

** If the above referenced part numbers are no longer available from the factory or your distributor, it will be substituted with the appropriate Anti-Loft counterpart. Not all colors may be available.*

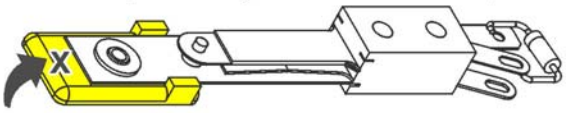

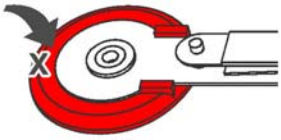

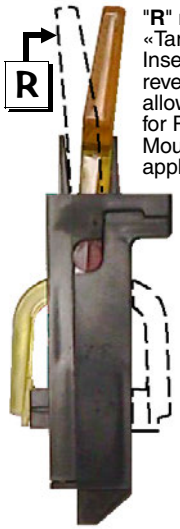

"**R**" means «Target Insert» is reversed, allowing for Rear Mounted application.

-XX REPLACE WITH 2-DIGIT FOR COLOR:
-00 Black
-01 Clear
-02 Red
-03 Amber
-04 Green
-05 Blue
-06 Yellow
-07 Orange
-08 White
-09 Purple
-10 Fluor. Orange
-11 Fluor. Green
-12 Fluor. Blue
-13 Teal Green
-14 Gray
-15 Luminescent
-16 Gold
Note: Not all colors available.

Take Note:

1. **Items A-E** come in various colors. *These targets may not be available in every color.* The "**-XX**" in should be replaced with the desired 2-Digit number for the color desired as described in the Color Chart below. *As of print date, the following colors were used :*
-01 Clear (A, D); **-02** Red (A, B, C, D, E); **-03** Amber (D, E); **-04** Green (A, B); **-05** Blue (C); **-06** Yellow (A, C), **-09** Purple (B, D); **-11** Fluorescent Green (A, B, D)
2. *For location(s) and type of Stand-Up Targets used, if any, see Section **4**, Chapter **1**, Parts Identification & Location.*

Nr.	STAND-UP TARGET PARTS	SPI PART Nr.
A	Modular Stand-Up Target Narrow Assy.	500-6138-XX
	Stand-Up Target Narrow (Insert)	**545-6138-XX**
B	Modular Stand-Up Target Square Assy.	500-6139-XX
	Stand-Up Target Square (Insert)	**545-6139-XX**
C	Modular Stand-Up Target Rectangle Assy.	500-6228-XX
	Stand-Up Target Rectangle (Insert)	**545-6228-XX**
D	Modular Stand-Up Target Round Assy.	500-6075-XX
	Stand-Up Target Round (Insert)	**545-6075-XX**
E	Mod. Stand-Up Target 1" Spherical Assy.	500-6189-XX
	Stand-Up Target 1" Spherical (Insert)	**545-6189-XX**

To Replace the « Target Insert » or change Target Orientation :

Items A-E Note: For the Target Assembly use the "**500-**" SPI Part Number(s) shown in the Parts Table below. To receive the Target Assembly with the « Target Insert » « ***R**eversed » simply add a **"R"** at the end of the Part Number. See Side View picture left to compare (dashed line shows target reversed).* For just the «Target Insert» use the "**545-**" SPI Part Number.

To reverse it yourself or to just change the insert:

1. With a small flat head screwdriver, push into the small tab at the bottom of the target front and give a slight twist motion to "pop" the two halves.

2. Push the Target Insert bottom in at the same time while you slide the top (front) part up, then let go of the insert as the two halves come apart.

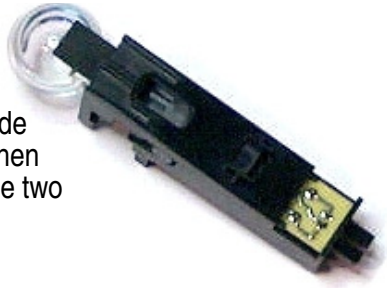

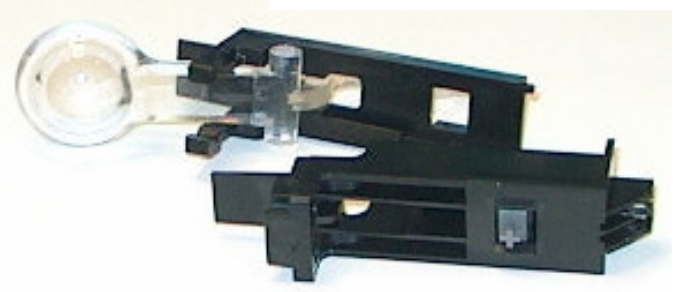

3. Replace target or reinsert it into the other size while sliding the two halves back together.

Note: *If you were reversing the orientation, don't forget to also turn the Switch Actuator PCB **180°**. Test Switch.*

APPENDIX J

Coin Cards (USA & International Pricing Defaults) ▶ For Yellow Stock add -Y to the Part Number

*If more than one Pricing Scheme is available for countries listed, the **F.** listed beside the option, denotes the Factory Default Setting.*

FOR VIEWS OF THE LATEST or OPTIONAL USA, INTERNATIONAL / EURO AND CUSTOM COIN CARDS, VISIT OUR WEBSITE.

Not Shown USA 755-5400-10 Tournament Option $2 = X1; 755-5400-11 Tournament Option $1.50 = X1

USA 10 *F.*	USA 10	USA 2-7 *or* CANADA	*FOR CUSTOM PRICING* †	USA 3 *with* ToPS™	USA 5 *with* ToPS™
NON-TOURNAMENT PLAY $ .75=x1 $2.00=x3 TOURNAMENT PLAY! $1.50=x1	75¢=x1 SUPER VALUE $2.00=x3	50¢=x1	Backside is Blank (Border Only) *Typeset your Custom Pricing*	NON-TOURNAMENT PLAY $ .50=x1 $1.00=x2 TOURNAMENT PLAY! $1.00=x1	NON-TOURNAMENT PLAY $ .50=x1 $2.00=x5 TOURNAMENT PLAY! $1.00=x1
755-5400-11 *Front*	755-5400-11 *Back*	755-5400-02 *Front*	755-5400-01, -02 *or* -04 *Back*	755-5400-03 *or* -09 *Front*	755-5400-03 *Back / -08 Front*

AUSTRALIA 1 *F.*	AUSTRALIA 2	CROATIA	*FOR CUSTOM PRICING* †	DENMARK 1 *F.*	DENMARK 2
$1.00=x1 SUPER VALUE $2.00=x3	$1.00=x1	3 KUNA=x1 5 KUNA=x2	Backside is Blank (Border Only) *Typeset your Custom Pricing*	Kr.3,00=x1 Kr.5,00=x2	Kr.2,00=x1 Kr.5,00=x3 Kr.10,00=x7
755-5406-00 *Front*	755-5406-00 *Back*	755-5410-00 *Front*	755-5410-00 *Back*	755-5402-00 *Front*	755-5402-00 *Back*

JAPAN 1	JAPAN 2 *F.*	MIDDLE EAST	*ANY COUNTRY CAN USE*	NEW ZEALAND 1 *F.*	NEW ZEALAND 2
¥100=x1	¥100=x1 ¥200=x3	TOKEN=x1	COIN=x1	$1.00=x1	$1.00=x1 SUPER VALUE $2.00=x3
755-5408-01 *Front*	755-5408-01 *Back*	755-5400-06 *Front*	*755-5400-06 Back*	*755-5406-00 Back*	755-5406-00 *Front*

NORWAY 1 *F.*	NORWAY 2	RUSSIA *F.*	RUSSIA (ALTERNATE)	SOUTH AFRICA	*FOR CUSTOM PRICING* †
Kr. 10,00=x1	Kr. 10,00=x1 Kr.20,00=x3	5 Рублей=x1	Жетон=x1	R2=x1	Backside is Blank (Border Only) *Typeset your Custom Pricing*
755-5403-01 *Front*	755-5403-01 *Back*	755-5411-00 *Front*	755-5411-00 *Back*	755-5409-01 *Front*	755-5409-01 *Back*

SWEDEN 1 *F.*	SWEDEN 2	SWITZERLAND 1 *F.*	SWITZERLAND 2	TAIWAN	*FOR CUSTOM PRICING* †
10,00 kr.=x1 15,00 kr.=x2 20,00 kr.=x3	5,00 kr.=x1	sf 1,00=x1 sf 5,00=x6	sf 1,00=x1 sf 2,00=x3 sf 5,00=x9	TWD10=x1	Backside is Blank (Border Only) *Typeset your Custom Pricing*
755-5404-00 *Front*	755-5404-00 *Back*	755-5405-00 *Front*	755-5405-00 *Back*	755-5412-00 *Front*	755-5412-00 *Back*

UK 1	UK 3	UK 5 *F.*	*FOR CUSTOM PRICING* †
£1.00=x3 £2.00=x7	£ .50=x1 £1.00=x2 £2.00=x5	£1.00=x1 £2.00=x3	Backside is Blank (Border Only) *Typeset your Custom Pricing*
755-5407-00 *Front*	755-5407-00 *Back*	755-5407-01 *Front*	755-5407-01 *Back*

Appendix J Notes:

1. Coin Card on Game is determined by original shipping country destination.
2. Optional Coin Card(s), are available via your distributor or via free download @ www.sternpinball.com/**coinagecards.shtml**.

Older style Coin Cards (foreign or domestic) not available on our website or no longer available through your distributor, are obsolete.

3. Coin Cards which have a Blank Backside *can be used for* †***Custom Pricing***.

Not Shown EURO 755-5401-20 Tournament Custom (can fill in your own pricing).

EURO 1	EURO 2	EURO 3	EURO 4	EURO 5	EURO 6
€ .50=x1	€ .50=x1 €1.00=x2 €2.00=x5	€ .50=x1 €1.00=x3	€ .50=x1 €1.00=x2 €2.00=x6	€ .50=x1 €1.00=x3 €2.00=x7	€ .50=x2
755-5401-01 *1-Side Only*	755-5401-02 *1-Side Only*	755-5401-03 *1-Side Only*	755-5401-04 *1-Side Only*	755-5401-05 *1-Side Only*	755-5401-06 *1-Side Only*

EURO 7	EURO 8	EURO 9	EURO 10	EURO 11	EURO 12
€1.00=x1 €4.00=x5	€1.00=x1 €2.00=x3	€1.00=x1 €1.50=x2 €2.00=x3	€1.00=x1 €2.00=x3 €3.00=x7	€1.00=x1 €2.00=x4	€1.00=x2 €4.00=x9
755-5401-07 *1-Side Only*	755-5401-08 *1-Side Only*	755-5401-09 *1-Side Only*	755-5401-10 *1-Side Only*	755-5401-11 *1-Side Only*	755-5401-12 *1-Side Only*

◣ EURO FACTORY DEFAULT SUMMARY TABLE ◢

EURO 1	EURO 2	EURO 3	EURO 4	EURO 5	EURO 6	EURO 7	EURO 8	EURO 9	EURO 10	EURO 11	EURO 12
BELGIUM ITALY 1 PORTUGAL	*GERMANY 2*	*NETHERLANDS SPAIN*			*GREECE*		*FINLAND*	*AUSTRIA*	*FRANCE*		

Section ***3***, *Chapter* ***4***, ***GO TO ADJUSTMENTS MENU***, *Adj.* ***18***, ***Game Pricing***, ***USA & International (non-Euro) and Euro 1-12 Summary & International (Euro) Standard Pricing Select Tables***, *summarizes Standard or Custom Pricing Schemes & the Dip Switch Setting required.*

In SWITCH MENU also select:

ACTIVE and DEDICATED SWITCH TESTS

SWITCH MATRIX GRID & DEDICATED SWITCHES (for notes & locations, see Page DR. 4 or 17)

Column (Drive) / Row (Return)	1: Q1 GRN-BRN CN5-P1	2: Q2 GRN-RED CN5-P3	3: Q3 GRN-ORG CN5-P4	4: Q4 GRN-YEL CN5-P5	5: Q5 GRN-BLK CN5-P6	6: Q6 GRN-BLU CN5-P7	7: Q7 GRN-VIO CN5-P8	8: Q8 GRN-GRY CN5-P9
1: U400 WHT-BRN CN7-P9	1 Cabinet Side LT BUTTON (UK ONLY) 180-5160-00	9 Below P/F LEFT VUK DOTS 180-5116-01	17 Above P/F SWORD LOCK HIGH 180-5119-02	25 Above P/F RIGHT RAMP ENTER DOTS 180-5010-01	33 Mini-P/F MINI PF U.L. 180-5057-00	41 Below P/F TOP VUK *See Sw. 41 Note*	49 Below P/F LEFT BUMPER 180-5015-03	57 Below P/F LEFT OUTLANE 500-6227-02
2: U400 WHT-RED CN7-P8	2 Coin Door 4TH COIN SLOT 180-5204-00	10 Below P/F STANDUP 515-6027-08	18 Above P/F SWORD LOCK MID 180-5119-02	26 NOT USED	34 Mini-P/F MINI PF U.R. 180-5057-00	42 Above P/F INNER LOOP 180-5190-28	50 Below P/F RIGHT BUMPER 180-5015-03	58 Below P/F LEFT RETURN LANE 500-6227-02
3: U400 WHT-ORG CN7-P7	3 Coin Door 6TH COIN SLOT *Future Use*	11 Below P/F 4-BALL TROUGH #1 (LEFT) 180-5119-02	19 Above P/F SWORD LOCK LOW 180-5119-02	27 NOT USED	35 Mini-P/F MINI PF L.L. 180-5057-00	43 Below P/F LEFT TOP LANE 500-6227-02	51 Below P/F BOTTOM BUMPER 180-5015-03	59 Below P/F LEFT SLINGSHOT 180-5054-00 (x2)
4: U400 WHT-YEL CN7-P6	4 Coin Door RIGHT COIN SLOT 180-5204-00	12 Below P/F 4-BALL TROUGH #2 180-5119-02	20 Below P/F RIGHT ORBIT LOW 500-6227-02	28 Above P/F BALROG HIT 180-5119-00	36 Mini-P/F MINI PF L.R. 180-5057-00	44 Below P/F MIDDLE TOP LANE 500-6227-02	52 Above P/F SPINNER 180-5190-28	60 Below P/F RIGHT OUTLANE 500-6227-02
5: U401 WHT-GRN CN7-P5	5 Coin Door CENTER COIN SLOT / DBA 180-5204-00	13 Below P/F 4-BALL TROUGH #3 180-5119-02	21 Above P/F RIGHT ORBIT HI 180-5190-28	29 Below P/F PALANTIR 515-5162-08	37 Below P/F LEFT ORBIT LOW 500-6227-02	45 Below P/F RIGHT TOP LANE 500-6227-02	53 Below P/F SPOT RING 515-5162-08	61 Below P/F RIGHT RETURN LANE 500-6227-02
6: U401 WHT-BLU CN7-P3	6 Coin Door LEFT COIN SLOT 180-5204-00	14 Below P/F 4-BALL TROUGH VUK OPTO *See Sw. 14 Note*	22 Above P/F RAIL RAMP EXIT 180-5197-00	30 Below P/F RIGHT VUK DOTS 180-5116-01	38 Below P/F LEFT ORBIT HI 500-6227-02	46 Below P/F TOP SAUCER 180-5186-00	54 In Cabinet START BUTTON 180-5174-00	62 Below P/F RIGHT SLINGSHOT 180-5054-00 (x2)
7: U401 WHT-VIO CN7-P2	7 Coin Door 5TH COIN SLOT *Future Use*	15 Below P/F 4-BALL STACKING OPTO *See Sw. 15 Note*	23 Above P/F RIGHT RAMP TARGET 515-6027-08	31 Below P/F BALROG OPEN 180-5119-02	39 Below P/F LEFT RAMP ENTER 500-6227-02	47 Back Panel RING MADE *See Sw. 47 Note*	55 In Cabinet TOURNAMENT START 180-5174-00	63 NOT USED
8: U401 WHT-GRY CN7-P1	8 Cabinet Side RT BUTTON (UK ONLY) 180-5160-00	16 Below P/F SHOOTER LANE 180-5157-00	24 Above P/F RIGHT RAMP MADE 180-5198-00	32 Below P/F BALROG CLOSED 180-5119-02	40 Above P/F LEFT RAMP MADE 180-5010-01	48 Back Panel BACK TROUGH 180-5057-00	56 In Cabinet PLUMB BOB TILT *See Sw. 56 Note*	64 NOT USED

GROUND / IC U206 INPUTS	GROUND BLK CN6-P1, -P11
1: U206 GRY-BRN CN6-P2	DS-1 on Cabinet Side #1 LEFT FLIPPER BUTTON 180-5160-00
2: U206 GRY-RED CN6-P3	DS-2 Below Playfield #2 LEFT FLIPPER E.O.S (End-of-Stroke) 180-5149-00 *on Flipper*
3: U206 GRY-ORG CN6-P4	DS-3 on Cabinet Side #3 RIGHT FLIPPER BUTTON 180-5160-00
4: U206 GRY-YEL CN6-P6	DS-4 Below Playfield #4 RIGHT FLIPPER E.O.S. (End-of-Stroke) 180-5149-00 *on Flipper*
5: U206 GRY-GRN CN6-P7	DS-5 NOT USED
6: U206 GRY-BLU CN6-P8	DS-6 on Coin Door #6 VOLUME (RED BUTTON) (In Test: LEFT) 180-5192-02
7: U206 GRY-VIO CN6-P9	DS-7 on Coin Door #7 SERV. CRED. (GREEN BUTTON) (In Test: RIGHT) 180-5192-04
8: U206 GRY-BLK CN6-P10	DS-8 on Coin Door #8 BEGIN TEST (BLACK BUTTON) (In Test: ENTER) 180-5192-00

In LAMP MENU also select:

TEST ALL LAMPS, ROW & COLUMN LAMP TESTS

LAMP MATRIX GRID (for notes & locations, see Page DR. 5 or 23)

Column (18v) / Row (Ground)	1: U17 YEL-BRN J13-P9	2: U16 YEL-RED J13-P8	3: U15 YEL-ORG J13-P7	4: U14 YEL-BLK J13-P6	5: U13 YEL-GRN J13-P5	6: U12 YEL-BLU J13-P4	7: U11 YEL-VIO J13-P3	8: U10 YEL-GRY J13-P1
1: Q33 RED-BRN J12-P1	1 #555 Bulb (K) EEP	2 #555 Bulb K (E) EP	3 #555 Bulb KE (E) P	4 #555 Bulb KEE (P)	5 #555 Bulb THE FELLOWSHIP OF THE RING	6 #555 Bulb THE TWO TOWERS	7 #555 Bulb THE RETURN OF THE KING	8 #555 Bulb SHOOT AGAIN
2: Q34 RED-BLK J12-P2	9 #555 Bulb PIPPIN	10 #555 Bulb MERRY	11 #555 Bulb SAM	12 #555 Bulb ARAGORN	13 #555 Bulb FRODO	14 #555 Bulb GANDALF	15 #555 Bulb LEGOLES	16 #555 Bulb GIMLI
3: Q35 RED-ORG J12-P3	17 #555 Bulb BOROMIR	18 #555 Bulb MYSTERY	19 #555 Bulb FRODO ARROW	20 #44 Bulb DESTROY RING	21 #555 Bulb MODE START	22 #555 Bulb PALANTIR	23 #44 Bulb PALANTIR GLOBE	24 #555 Bulb SPOT RING
4: Q36 RED-YEL J12-P4	25 #555 Bulb PIPPIN ARROW	26 #555 Bulb GIFT OF THE ELVES	27 #555 Bulb LIGHT EXTRA BALL	28 #555 Bulb RING MULTIBALL	29 #555 Bulb BIG POINTS	30 #555 Bulb LIGHT SPECIAL	31 #555 Bulb SUPER RING FRENZY	32 #555 Bulb 2X SCORING
5: Q37 RED-GRN J12-P5	33 #555 Bulb LEGOLES ARROW	34 #555 Bulb L RAMP MAN RING	35 #555 Bulb L RAMP DWARF RING	36 #555 Bulb L RAMP ELF RING	37 #555 Bulb GANDALF ARROW	38 #555 Bulb C LOOP MAN RING	39 #555 Bulb C LOOP DWARF RING	40 #555 Bulb C LOOP ELF RING
6: Q38 RED-BLU J12-P6	41 #555 Bulb GIMLI ARROW	42 #555 Bulb EXTRA BALL	43 #555 Bulb GOLLUM MULTIBALL	44 #555 Bulb SPECIAL	45 #555 Bulb MERRY ARROW	46 #555 Bulb R ORBIT MAN RING	47 #555 Bulb R ORBIT DWARF RING	48 #555 Bulb R ORBIT ELF RING
7: Q39 RED-VIO J12-P8	49 #555 Bulb ARAGORN ARROW	50 #555 Bulb R RAMP MAN RING	51 #555 Bulb R RAMP DWARF RING	52 #555 Bulb R RAMP ELF RING	53 #555 Bulb LOCK	54 #555 Bulb LANES	55 #555 Bulb TOWER	56 #555 Bulb FLIPPER
8: Q40 RED-GRY J12-P9	57 #555 Bulb (O) RC	58 #555 Bulb O (R) C	59 #555 Bulb OR (C)	60 #555 Grn. Bulb POTD U.L.	61 #555 Grn. Bulb POTD U.R.	62 #555 Grn. Bulb POTD L.L.	63 #555 Grn. Bulb POTD L.R.	64 #44 Bulb SHOOTER LANE #1 BOT
9: Q41 RED-WHT J12-P10	65 #44 Bulb SHOOTER LANE #2	66 #44 Bulb SHOOTER LANE #3	67 #44 Bulb SHOOTER LANE #4	68 #44 Bulb SHOOTER LANE #5	69 #44 Bulb SHOOTER LANE #6	70 #44 Bulb SHOOTER LANE #7	71 #44 Bulb SHOOTER LANE #8	72 #44 Bulb SHOOTER LANE #9 TOP
10: Q42 RED J12-P11	73 #44 Bulb ESCAPE THE RINGWRAITHS	74 #44 Bulb GANDALF VS SARUMAN	75 #44 Bulb WARG ATTACK	76 #44 Bulb WAR OF THE ENTS	77 #44 Bulb BATTLE WITH SHELOB	78 #44 Bulb DESTROY THE WITCH-KING	79 #555 Bulb TOURNAMENT BUTTON	80 #555 Bulb START BUTTON

▼ U.S. ▼
Customary
Inch Ruler

Metric Conversion

1/16"
1/8"
1/4"
1/2"
3/4"
.0625"
.125"
.25"
.5"
.75"
1/32" (.03125")

1" = 2.54cm /25.4mm
1cm = .3937"
1mm = .03937"

- For metric, multiply inch value by metric value, e.g. 5" X 2.54cm = 12.7cm or 127mm.
- For US, multiply metric value by inch value, e.g. 13cm X .3937" = 5.1181"

http://www.SternPinball.com

Visit our website for Pinball game information, Technical Support & Part Sales (for Service Bulletins and a whole lot more!), Stern News, Pinball Links and Distributor Listings. HELP US, HELP YOU! If you have any suggestions, questions, need technical advice, find errors or have comments, contact us through our website or call!

This Game Service Manual and all other documents relating to this product, playfield components, features, rules, programming and operation are subject to change without notice (Service Bulletins, if applicable, available through our website).

STERN®
PINBALL, INC.
PARTS SALES & TECHNICAL SUPPORT

2020 Janice Avenue, Melrose Park, IL 60160

1-800-KICKERS

Tel 708-345-7700 (Option 1) Fax 708-345-7889 eMail parts.service@SternPinball.com

CE Games shipped factory direct to Europe from Stern Pinball, Inc. are CE approved and will have an "E" prefix attached to the Serial Number.

7 8 0 - 5 0 8 0 - 0 0